WORK ORDER NO. 1362575

APPROPRIATION: MILCON

ENERGY – ICS RETROCOMMISSIONING & DDC UPGRADE

At

JEB LITTLE CREEK – FORT STORY, VIRGINIA

REQUEST FOR PROPOSAL PREPARED BY:

Jacobs
1100 N. Glebe Rd, Ste 500
Arlington, VA 22201
(A/E Contract N40085-12-D-1703)

PREPARED BY:

Mechanical: Trevor Behar, PE Jacobs
Electrical: Carlos Teran, PE Jacobs

Michele Holland, PE — Michele M. Holland — July 14, 2016

Submitted By: Jacobs — Signature — Date

JACKSON.DAVID.C.1256319787 — Digitally signed by JACKSON.DAVID.C.1256319787 DN: c=US, o=U.S. Government, ou=DoD, ou=PKI, ou=USN, cn=JACKSON.DAVID.C.1256319787 Date: 2016.07.19 10:54:22 -04'00'

RFP Accepted by CI Team Lead/PMEB — Signature — Date

Design Manager — Signature — Date

TABLE OF CONTENTS

Part 1 Proposal Forms and Documents

Part 2 General Requirements

01 14 00.05 20 Work Restrictions for Design-Build
01 20 00.05 20 Price and Payment Procedures for Design-Build
01 30 00.05 20 Administrative Requirements for Design-Build
01 31 19.05 20 Post Award Meetings
01 32 16.05 20 Design and Construction Progress Documentation
01 32 17.05 20 Network Analysis Schedules (NAS) for Design-Build
01 33 00.05 20 Construction Submittal Procedures
01 33 10.05 20 Design Submittal Procedures
01 33 29.00 20 Sustainable Requirements
01 35 26.05 20 Government Safety Requirements for Design-Build
01 45 00.05 20 Design and Construction Quality Control
01 50 00.05 20 Temporary Facilities and Controls for Design-Build
01 57 19.00 20 Temporary Environmental Controls
01 57 19.01 20 Supplemental Temporary Environmental Controls
01 74 19.05 20 Construction and Demolition Waste Management for Design-Build
01 78 24.00 20 Facility Electronic Operation and Maintenance Support Information (eOMSI)

Part 3 Statement of Work / Project Program

Chapter 1 Project Description
Chapter 2 Project Objectives
Chapter 3 Site Analysis
Chapter 4 Building Requirements
Chapter 5 Room Requirements (Not Used)
Chapter 6 Engineering Systems Requirements

Part 4 Minimum Materials, Engineering and Construction Requirements

B30 Roofing
C10 Interior Construction
C20 Stairs
C30 Interior Finishes
D10 Conveying
D20 Plumbing
D30 HVAC
D40 Fire Protection
D50 Electrical
E10 Equipment
E20 Furnishings
F10 Special Construction
F20 Selective Building Demolition

G10 Site Preparations
G20 Site Improvements
G30 Site Civil/Mechanical Utilities
G40 Site Communication & Security

Part 5 Prescriptive Technical Specifications

SECTION 23 00 00 AIR SUPPLY, DISTRIBUTION, VENTILATION, AND EXHAUST SYSTEMS
SECTION 23 01 30.41 HVAC SYSTEM CLEANING
SECTION 23 05 93 TESTING, ADJUSTING, AND BALANCING FOR HVAC SECTION 23 08 00.00 10 COMMISSIONING OF HVAC SYSTEMS
SECTION 23 09 33.00 40 ELECTRIC AND ELECTRONIC CONTROL SYSTEM FOR HVAC

Part 6 Attachments

Base Map
Equipment Asset Lists
Energy usage data
Individual Building information
- Phase 1 Surveys_Q's_Data Sheet
- As-built or record drawings
- TAB Reports (pending)
- Functional Performance Tests

Small Project Table of Contents

05/11

Part 1 Proposal Forms and Documents

Part 2 General Requirements

Attachment A: Project-Specific Requirements

Part 3 Statement of Work / Project Program

Part 4 Minimum Materials, Engineering and Construction Requirements

Part 5 Prescriptive Technical Specifications

Part 6 Attachments

Preface

This Request for Proposal (RFP) consists of six parts.

Part 1 contains typical contractual forms, procedures, bidding instructions, bond information, clauses and wage decisions.

Part 2 contains general contract administrative and execution requirements including, but not limited to safety, design criteria & process, quality control, security, schedule, invoicing, temporary facilities, and design and construction oversight processes.

Part 2, Attachment A, contains project-specific general requirements that may either modify and/or supplement the corresponding standard paragraphs in the Part 2 "General Requirements" section.

Part 3 lists the project requirements, specific scope items, and expected quality level above and beyond those outlined in Part 4.

Part 4 contains Performance Specifications and minimum quality requirements.

Part 5, prescriptive specifications, is typically not used in this Small Project format.

Part 6 contains background project information, references, and other project-specific requirements.

Part 1 Proposal Forms and Documents

This section to be provided by NAVFAC Mid Atlantic.

Part 2 General Requirements

SECTION 01 14 00.05 20

WORK RESTRICTIONS FOR DESIGN-BUILD
01/12

PART 1 GENERAL

1.1 SUBMITTALS

The use of a "G" following a submittal indicates that a Government approval action is required. Submit the following in accordance with Section 01 33 10.05 20 DESIGN SUBMITTAL PROCEDURES and Section 01 33 00.05 20 CONSTRUCTION SUBMITTAL

PROCEDURES. SD-01 Preconstruction

Submittals

List of contact personnel; G

1.2 SPECIAL SCHEDULING REQUIREMENTS

a. The project site shall be ready for operation as approved by Contracting Officer before work is started which would interfere with normal operation.

b. Have materials, equipment, and personnel required to perform the work at the site prior to the commencement of the work.

c. The surrounding buildings and parking will remain in operation during the entire construction period. Conduct operations so as to cause the least possible interference with normal operations of the activity.

d. Permission to interrupt any Activity roads, railroads, and/or utility service shall be requested in writing a minimum of 15 calendar days prior to the desired date of interruption.

e. The work under this contract requires special attention to the scheduling and conduct of the work in connection with existing operations. Identify on the construction schedule each factor which constitutes a potential interruption to operations.

f. NMCI Contractor Access (if applicable): The NMCI Contractor must be allowed access to the facility towards the end of construction (finishes 90 percent complete, rough-in 100 percent complete, Inside Plant (ISP)/Outside Plant (OSP) infrastructure in place) to provide equipment in the telecommunications rooms and make final connections. The Contractor will be required to coordinate their efforts with the NMCI contractor to facilitate joint use of building spaces during the final phases of construction and work the coordination effort into the construction schedule. Requirements for NMCI are specified in Part 4, D50 ELECTRICAL and G40 SITE ELECTRICAL UTILITIES.

g. Certification and accreditation of the classified data network requires that all facility security systems be installed and fully functional before the request for certification can be prepared and submitted to SPAWAR for approval. Because of the time required for the approvals process, all security measures must be in place a minimum of 150 days prior to facility BOD.

1.2.1 Project Sequencing

This project takes place in an existing complex of buildings, all of which will remain functional throughout the duration of the project. Careful project sequencing must be implemented in order to maintain all essential functions of the activity.

Each sequence will be considered complete upon a successful Final Acceptance Inspection as defined in Section 01 45 00.05 20 Design and Construction Quality Control. Available existing drawings for all facilities in this project have been provided in Part 6 Attachments of this RFP. Any reference herein this RFP to project or construction "phasing" will be considered project or construction "sequencing". The duration of each sequence item shall be determined by the Contractor. The total duration of all sequence and construction items must be within the constraints of the contract duration.

1.3 CONTRACTOR ACCESS AND USE OF PREMISES

1.3.1 Activity Regulations

Ensure that Contractor personnel employed on the Activity become familiar with and obey Activity regulations including safety, fire, traffic and security regulations. Keep within the limits of the work and avenues of ingress and egress. To minimize traffic congestion, delivery of materials shall be outside of peak traffic hours (6:30 to 8:00 a.m. and 3:30 to 5:00 p.m.) unless otherwise approved by the Contracting Officer. Wear hard hats in designated areas. Do not enter any restricted areas unless required to do so and until cleared for such entry. The Contractor's equipment shall be conspicuously marked for identification.

1.3.1.1 Subcontractors and Personnel Contacts

Furnish a list of contact personnel of the Contractor and subcontractors including addresses and telephone numbers for use in the event of an emergency. As changes occur and additional information becomes available, correct and change the information contained in previous lists.

1.3.1.2 Identification Badges

Application for and use of badges will be as directed. Obtain access to the installation by participating in the Navy Commercial Access Control System (NCACS) or by obtaining passes each day from the Base Pass and Identification Office. Costs for obtaining passes through the NCACS are the responsibility of the Contractor. One-day passes, issued through the Base Pass and Identification Office will be furnished without charge.
Furnish a completed EMPLOYMENT ELIGIBILITY VERIFICATION (DHS FORM I-9)

form for all personnel requesting badges. This form is available at http://www.uscis.gov/portal/site/uscis by searching or selecting Employment Verification (Form I-9). Immediately report instances of lost or stolen badges to the Contracting Officer.

a. NCACS Program: NCACS is a voluntary program in which Contractor personnel who enroll, and are approved, are subsequently granted access to the installation for a period up to one year, or the length of the contract, whichever is less, and are not required to obtain a new pass from the Base Pass and Identification Office for each visit. The Government performs background screening and credentialing. Throughout the year the Contractor employee must continue to meet background screening standards. Periodic background screenings are conducted to verify continued NCACS participation and installation access privileges. Under the NCACS program, no commercial vehicle inspection is required, other than for Random Anti-Terrorism Measures (RAM) or in the case of an elevation of Force Protection Conditions (FPCON). Information on costs and requirements to participate and enroll in NCACS is available at http://www.rapidgate.com/vendors/how-to-enroll or by calling 1-877-727-4342. Contractors should be aware that the costs incurred to obtain NCACS credentials, or costs related to any means of access to a Navy Installation, are not reimbursable. Any time invested, or price(s) paid, for obtaining NCACS credentials will not be compensated in any way or approved as a direct cost of any contract with the Department of the Navy.

b. One-Day Passes: Participation in the NCACS is not mandatory, and if the Contractor chooses not to participate, the Contractor's personnel will have to obtain daily passes, be subject to daily mandatory vehicle inspection, and will have limited access to the installation. The Government will not be responsible for any cost or lost time associated with obtaining daily passes or added vehicle inspections incurred by non-participants in the NCACS.

1.3.2 Working Hours

Regular working hours shall consist of an 8 1/2 hour period, between 7 a.m. and 3:30 p.m., Monday through Friday, excluding Government holidays.

1.3.3 Work Outside Regular Hours

Work outside regular working hours requires Contracting Officer approval. Make application 15 calendar days prior to such work to allow arrangements to be made by the Government, giving the specific dates, hours, location, type of work to be performed, contract number and project title. Based on the justification provided, the Contracting Officer may approve work outside regular hours. During periods of darkness, the different parts of the work shall be lighted in a manner approved by the Contracting Officer.

1.3.4 Exclusionary Periods

No work shall be performed during Basewide annual security exercises without prior written approval of the Contracting Officer. Such delays shall be incorporated into the Contractor's construction schedule and

will be at no additional cost or time to the Government.

1.3.5 Occupied and Existing Buildings

The Contractor shall be working in and around existing buildings which are occupied. Do not enter the buildings or occupied spaces without prior approval of the Contracting Officer.

The existing buildings and their contents shall be kept secure at all times. Provide temporary closures as required to maintain security as directed by the Contracting Officer.

Provide dust covers or protective enclosures to protect existing work that remains and Government material located in the occupied areas during the construction period.

The Government will remove and relocate other Government property in the areas of the buildings scheduled to receive work.

1.3.6 Utility Cutovers and Interruptions

a. Make utility cutovers and interruptions after normal working hours or on Saturdays, Sundays, and Government holidays. Conform to procedures required in the paragraph "Work Outside Regular Hours."

b. Ensure that new utility lines are complete, except for the connection, before interrupting existing service.

c. Interruption to water, sanitary sewer, storm sewer, telephone service, electric service, air conditioning, heating, fire alarm and compressed air, shall be considered utility cutovers pursuant to the paragraph entitled "Work Outside Regular Hours."

d. Operation of Station Utilities: The Contractor shall not operate nor disturb the setting of control devices in the station utilities system, including water, sewer, electrical, and steam services. The Government will operate the control devices as required for normal conduct of the work. The Contractor shall notify the Contracting Officer giving reasonable advance notice when such operation is required.

1.3.6.1 Location of Underground Utilities

Obtain digging permits prior to start of excavation by contacting the Contracting Officer 15 calendar days in advance. Scan the construction site with electromagnetic or sonic equipment, and mark the surface of the ground or paved surface where existing underground utilities or utilities encased in pier structures are discovered. Verify the elevations of existing piping, utilities, and any type of underground or encased obstruction not indicated to be specified or removed but indicated or discovered during scanning in locations to be traversed by piping, ducts, and other work to be conducted or installed.

a. Notification Prior to Excavation: Notify the Contracting Officer at least 15 days prior to starting excavation work. Contact Miss Utility
48 hours prior to excavating. Contractor is responsible for marking all utilities not marked by Miss Utility.

1.4 SECURITY REQUIREMENTS

Contract Clause "FAR 52.204-2, Security Requirements and Alternate II," "FAC 5252.236-9301, Special Working Conditions and Entry to Work Area," apply.

PART 2 PRODUCTS

Not used.

PART 3 EXECUTION

Not used.

-- End of Section --

SECTION 01 20 00.05 20

PRICE AND PAYMENT PROCEDURES FOR DESIGN-BUILD
01/12

PART 1 GENERAL

1.1 REFERENCES

The publications listed below form a part of this specification to the extent referenced. The publications are referred to within the text by the basic designation only.

U.S. ARMY CORPS OF ENGINEERS (USACE)

EP-1110-1-8	(2009) Construction Equipment Ownership and Operating Expense Schedule, Vol 1-12

1.2 SUBMITTALS

Government approval is required for submittals with a "G" designation; submittals not having a "G" designation are for Contractor Quality Control approval. The following shall be submitted in accordance with Section 01
33 10.05 20 DESIGN SUBMITTAL PROCEDURES and Section 01 33 00.05 20 CONSTRUCTION SUBMITTAL PROCEDURES:

SD-01 Preconstruction Submittals Schedule of Prices

1.3 SCHEDULE OF PRICES

1.3.1 Data Required

This contract requires the use of a cost-loaded Network Analysis Schedule (NAS). The information required for the Schedule of Prices will be entered as an integral part of the Network Analysis Schedule. Within 15 calendar days of notice of award, prepare and deliver to the Contracting Officer a Schedule of Prices (construction contract) as directed by the Contracting Officer. Provide a detailed breakdown of the contract price, giving quantities for each of the various kinds of work, unit prices, and extended prices. Costs shall be summarized and totals provided for each construction category.

1.3.2 Schedule Instructions

Payments will not be made until the Schedule of Prices has been submitted to and accepted by the Contracting Officer. For design phase progress payment(s), the Schedule of Prices or Earned Value Report from the Cost Loaded CPM shall include detailed design activities and general (summarized) approach for the construction phase(s) of the project. The Schedule of Prices shall be fully developed with detailed construction line items as design progresses. The complete design and construction Schedule of Prices or Earned Value Report shall be submitted and accepted prior to starting construction work.

For Fast-Tracked or Critical Path Submittals of construction projects, the Schedule of Prices shall include detailed design and construction line items for each fast-tracked/ critical path phase(s), submitted to and accepted by the Contracting Officer during the Post Award Kickoff Meetings and confirmed prior to starting construction work in that phase.
Additionally, the Schedule of Prices shall be separated as follows:

a. Primary Facility/s Cost Breakdown:

Defined as work on the primary facility/s out to the 5 foot line. Work out to the 5 foot line shall include construction encompassed within a theoretical line 5 foot from the face of exterior walls and shall include attendant construction, such as pad mounted HVAC equipment, that may extend beyond the 1.5 m (5 foot) line.

(1) Provide a cost breakout for all Primary Facility features that support Low Impact Development (LID), such as vegetated roof and

rainwater harvesting features. The sum of the Primary Facility Cost above - a. and these Primary Facility LID sub-items - (1) shall equal the total Primary Facility cost. Provide a subtotal cost of all Primary Facility LID
sub-items on the Schedule of Prices at design complete and project closeout.

b. Supporting Facilities Cost Breakdown:

Defined as site work, including incidental work, outside the 5 foot line.

(1) Provide a cost breakout for all Supporting Facilities features that support LID, such as bioswales, permeable paving, infiltration basins, tree box filters, etc.. The sum of the Supporting Facilities Cost above -
b. and these Supporting Facilities LID sub-items - (1) shall equal the total Supporting Facilities cost. Provide a subtotal cost of all Supporting Facilities LID sub-items on the Schedule of Prices at design complete and project closeout.

1.3.3 Real Property Assets

Provide the Draft and Interim DD Form 1354, Transfer and Acceptance of Military Real Property filled in with the appropriate Real Property Unique Identifiers (RPUID) and related construction Category Codes. Provide the Draft DD Form 1354 that uses the appropriate division of the RPUIDs/ Category Codes to represent the designed real property assets that apply to this contract and include all associated cost. The Contractor shall meet with the Contracting Officer and the Real Property Accounting Officer during the Post Award Kickoff Meeting and the Project Closeout Meetings to modify and include any necessary changes to the DD Form 1354. The Contractor shall provide the Interim DD Form 1354 that uses the appropriate division of the RPUIDs/ Category Codes to represent the final constructed facility and include all associated cost. Coordinate the Contractor's Price and Payment structure with the structure of the RPUIDs/ Category Codes.

Divide detailed asset breakdown into the RPUIDs and related construction Category Codes and populate associated costs which represent all aspects of the work. Where assets diverge into multiple RPUID/ Category Codes, divide the asset and provide the proportion of the assets in each RPUID/ Category Code. Assets and related RPUID/ Category Codes may be modified by the Contracting Officer as necessary during the course of the work.
Coordinate identification and proportion of these assets with the Government Real Property Accounting Officer.

Cost data accumulated under this section are required in the preparation of DD Form 1354. Coordinate with section 01 33 10.05 20 DESIGN SUBMITTAL PROCEDURES in paragraph titled "DD Form 1354".

1.3.4 Schedule Requirements for HVAC TAB

The field work Section 23 05 93 TESTING, ADJUSTING AND BALANCING shall be broken down in the Schedule of Prices and in the Construction Progress Documentation by separate line items which reflect measurable deliverables. Specific payment percentages for each line item shall be determined on a case by case basis for each contract. The line items

shall be as follows:

a. Approval of Design Review Report: The TABS Agency is required to conduct a review of the project plans and specifications to identify any feature, or the lack thereof, that would preclude successful testing and balancing of the project HVAC systems. The resulting findings shall be submitted to the Government to allow correction of the design. The progress payment shall be issued after review and approval of the report.

b. Approval of the pre-field engineering report: The TABS Agency submits a report which outlines the scope of field work. The report shall contain details of what systems will be tested, procedures to be used, sample report forms for reporting test results and a quality control checklist of work items that must be completed before TABS field work commences.

c. Season I field work: Incremental payments are issued as the TABS field work progresses. The TABS Agency mobilizes to the project site and executes the field work as outlined in the pre-field engineering report. The HVAC water and air systems are balanced and operational data shall be collected for one seasonal condition (either summer or winter depending on project timing).

d. Approval of Season I report: On completion of the Season I field work, the data is compiled into a report and submitted to the Government. The report is reviewed, and approved, after ensuring compliance with the
pre-field engineering report scope of work.

e. Completion of Season I field QA check: Contract QC and Government representatives meet the TABS Agency at the jobsite to retest portions of the systems reported in the Season I report. The purpose of these tests are to validate the accuracy and completeness of the previously submitted Season I report.

f. Approval of Season II report: The TABS Agency completes all Season II field work, which is normally comprised mainly of taking heat transfer temperature readings, in the season opposite of that under which Season I performance data was compiled. This data shall be compiled into a report and submitted to the Government. On completion of submittal review to ensure compliance with the pre-field engineering report scope, progress payment is issued. Progress payment is less than that issued for the Season I report since most of the water and air balancing work effort is completed under Season I.

1.4 CONTRACT MODIFICATIONS

In conjunction with the Contract Clause "DFARS 252.236-7000, Modification Proposals-Price Breakdown," and where actual ownership and operating costs of construction equipment cannot be determined from Contractor accounting records, equipment use rates shall be based upon the applicable provisions of the EP-1110-1-8.

1.5 CONTRACTOR'S INVOICE AND CONTRACT PERFORMANCE STATEMENT

1.5.1 Content of Invoice

Requests for payment will be processed in accordance with the Contract. Clause FAR 52.232-27, Prompt Payment Construction Contracts and FAR 52.232-5, Payments Under Fixed-Price Construction Contracts. The Requests for payment shall include the documents listed below:

a. The Contractor's invoice, on NAVFAC Form 7300/30 furnished by the Government, showing in summary form, the basis for arriving at the amount of the invoice. Form 7300/30 shall include certification by Quality Control (QC) Manager as required by the contract.

b. The Estimate for Voucher/ Contract Performance Statement on NAVFAC Form 7300/31 furnished by the Government, showing in detail: the estimated cost, percentage of completion, and value of completed performance for each of the construction categories stated in this contract. Use LANTNAVFACENGCOM Form 4-330/110 (New 7/84) on NAVFAC Atlantic contracts when a Monthly Estimate for Voucher is required.

c. Updated Project Schedule and reports required by the contract

d. Contractor Safety Self Evaluation Checklist

e. Other supporting documents as requested

f. Updated copy of submittal register.

g. Invoices not completed in accordance with contract requirements will be returned to the Contractor for correction of the deficiencies.

h. Subcontractor and supplier payment certification.

i. Materials on Site.

j. Monthly Work-hour report

k. Solid Waste Disposal Report

1.5.2 Submission of Invoices

If NFAS Clause 5252.232-9301 is included in the contract, the documents listed in paragraph titled "Content of Invoice" above shall be provided in their entirety as an attachment in Wide Area Work Flow (WAWF) for each invoice submitted. The maximum size of each WAWF attachment is two megabytes, but there are no limits on the number of attachments. If a document cannot be attached in WAWF due to system or size restriction it shall be provided as instructed by the Contracting Officer. All other paper invoices shall be forwarded with specific marking on the envelope. This marking shall be in the front lower left hand corner, in large letters, "INVOICES - ENCLOSED."

Monthly invoices and supporting forms for work performed through the anniversary award date of the contract shall be submitted to the Contracting Officer within 5 calendar days of the date of invoice For example, contract award date is the 7th of the month, the date of each monthly invoice shall be the 7th and the invoice shall be submitted by the 12th of the month.

1.5.3 Final Invoice

a. A final invoice shall be accompanied by the certification required by DFARS 252.247.7023 TRANSPORTATION OF SUPPLIES BY SEA, and the Contractor's Final Release. If the Contractor is incorporated, the Final Release shall contain the corporate seal. An officer of the corporation shall sign and the corporate secretary shall certify the Final Release.

b. For final invoices being submitted via WAWF, the original Contractor's Final Release Form and required certification of Transportation of Supplies by Sea must be provided directly to the respective Contracting Officer prior to submission of the final invoice. Once receipt of the original Final Release Form and required certification of Transportation of Supplies by Sea has been confirmed by the Contracting Officer, the Contractor shall then submit final invoice and attach a copy of the Final Release Form and required certification of Transportation of Supplies by Sea in WAWF.

c. Final invoices not accompanied by the Contractor's Final Release and required certification of Transportation of Supplies by Sea will be considered incomplete and will be returned to the Contractor.

1.6 PAYMENTS TO THE CONTRACTOR

Payments will be made on submission of itemized requests by the Contractor which comply with the requirements of this section, and will be subject to reduction for overpayments or increase for underpayments made on previous payments to the Contractor.

1.6.1 Obligation of Government Payments

The obligation of the Government to make payments required under the provisions of this contract will, at the discretion of the Contracting Officer, be subject to reductions and/or suspensions permitted under the FAR and agency regulations including the following in accordance with "FAR

a. Reasonable deductions due to defects in material or workmanship;

b. Claims which the Government may have against the Contractor under or in connection with this contract;

c. Unless otherwise adjusted, repayment to the Government upon demand for overpayments made to the Contractor; and

d. Failure to provide up to date record drawings not current as stated in Contract Clause "FAC 5252.236-9310, Record Drawings."

1.6.2 Payment for Onsite and Offsite Materials

Progress payments may be made to the contractor for materials delivered on the site, for materials stored off construction sites, or materials that are in transit to the construction sites under the following conditions:

a. FAR 52.232-5(b) Payments Under Fixed Price Construction Contracts.

b. Materials delivered on the site but not installed, including completed preparatory work, and off-site materials to be considered for

progress payment shall be major high cost, long lead, special order, or specialty items, not susceptible to deterioration or physical damage in storage or in transit to the construction site. Examples of materials acceptable for payment consideration include, but are not limited to, structural steel, non-magnetic steel, non-magnetic aggregate, equipment, machinery, large pipe and fittings, precast/prestressed concrete products, plastic lumber (e.g., fender piles/curbs) and high-voltage electrical cable. Materials not acceptable for payment include consumable materials such as nails, fasteners, conduits, gypsum board, glass, insulation, and wall coverings.

c. Materials to be considered for progress payment prior to installation shall be specifically and separately identified in the Contractor's estimates of work submitted for the Contracting Officer's approval in accordance with Schedule of Prices requirement of this contract. Requests for progress payment consideration for such items shall be supported by documents establishing their value and that the title requirements of the clause at FAR 52.232-5 have been met.

d. Materials are adequately insured and protected from theft and exposure.

e. Provide a written consent from the surety company with each payment request for offsite materials.

f. Materials to be considered for progress payments prior to installation shall be stored either in Hawaii, Guam, Puerto Rico, or the Continental United States. Other locations are subject to written approval of the Contracting Officer.

PART 2 PRODUCTS

Not used.

PART 3 EXECUTION

Not used.

-- End of Section --

SECTION 01 30 00.05 20

ADMINISTRATIVE REQUIREMENTS FOR DESIGN-BUILD
03/13

PART 1 GENERAL

1.1 SUBMITTALS

The use of a "G" following a submittal indicates that a Government approval action is required. Submit the following in accordance with Section 01 33 10.05 20 DESIGN SUBMITTAL PROCEDURES and Section 01 33 00.05 20 CONSTRUCTION SUBMITTAL

PROCEDURES. SD-01 Preconstruction

Submittals

Insurance

1.2 MINIMUM INSURANCE REQUIREMENTS

Procure and maintain during the entire period of performance under this contract the following minimum insurance coverage:

a. Comprehensive general liability: $500,000 per occurrence

b. Automobile liability: $200,000 per person, $500,000 per occurrence for bodily injury, $20,000 per occurrence for property damage

c. Workmen's compensation as required by Federal and State workers' compensation and occupational disease laws.

d. Employer's liability coverage of $100,000, except in States where workers compensation may not be written by private carriers,

e. Others as required by the State.

Refer to UFGS section 01 33 10.05 20, CONSTRUCTION SUBMITTAL PROCEDURES for typical preconstruction submittals similar to insurance.

1.3 CONTRACTOR PERSONNEL REQUIREMENTS

1.3.1 Subcontractor Special Requirements

1.3.1.1 Asbestos Containing Material

All contract requirements of PART 4, F20 SELECTIVE BUILDING DEMOLITION, assigned to the Private Qualified Person (PQP) shall be accomplished directly by a first tier subcontractor.

1.3.1.2 HVAC TAB

All contract requirements of TAB work required by PART 4 D30, HVAC, shall be accomplished directly by a first tier subcontractor. No TAB work required by PART 4, D30, HVAC, shall be accomplished by a second tier subcontractor.

1.3.1.3 Qualified Testing Organization

All contract requirements of work required to be performed by a Qualified Testing Organization in PART 4, D50 ELECTRICAL and G40 SITE ELECTRICAL UTILITIES, shall be accomplished directly by a first tier subcontractor. No work to be performed by a Qualified Testing Organization, required by PART 4, D50 and G40 shall be accomplished by a second tier subcontractor.

1.4 SUPERVISION

Have at least one qualified supervisor capable of reading, writing, and conversing fluently in the English language on the job site during working hours. In addition, the Quality Control (QC) representative shall also have fluent English communication skills.

1.5 AMERICAN PREFERENCE POLICY

This project is funded under the 1987 Defense Appropriation Act and is estimated to be over $1,000,000. The American Preference policy applies as follows:

This policy precludes the award of construction contract estimated by the Government to exceed $1,000,000 to a foreign contractor; unless the lowest responsive bid of a U.S. contractor exceeds the lowest responsible and responsive bid of a foreign contractor by greater than 20 percent. To qualify as a U.S. contractor, the firm (or if a joint venture, all members of the joint venture) must be incorporated in the U.S. and comply with the following:
(a) the corporate headquarters shall be in the U.S,;
(b) the firm shall have filed corporate franchise and employment tax returns (if required) in the U.S. for a minimum of 2 years, shall have filed state and federal income tax returns (if required) for a minimum of 2 corporate years, and paid any taxes determined to be due as a result of such filings; and (c) the firm shall employ U.S. citizens in key management positions.

1.6 AVAILABILITY OF CADD DRAWING FILES

After award and upon request, the electronic "Computer-Aided Drafting and Design (CADD)" drawing files will be made available to the Contractor for use in preparation of construction drawings and data related to the referenced contract subject to the following terms and conditions.

Data contained on these electronic files shall not be used for any purpose other than as a convenience in the preparation of construction drawings and data for the referenced project. Any other use or reuse shall be at the sole risk of the Contractor and without liability or legal exposure to the Government. The Contractor shall make no claim and

waives to the fullest extent permitted by law, any claim or cause of action of any nature against the Government, its agents or sub consultants that may

arise out of or in connection with the use of these electronic files. T

he Contractor shall, to the fullest extent permitted by law, indemnify and hold the Government harmless against all damages, liabilities or costs, including reasonable attorney's fees and defense costs, arising out of or resulting from the use of these electronic files.

These electronic CADD drawing files are not construction documents. Differences may exist between the CADD files and the corresponding construction documents. The Government makes no representation regarding the accuracy or completeness of the electronic CADD files, nor does it make representation to the compatibility of these files with the Contractors hardware or software. In the event that a conflict arises between the signed and sealed construction documents prepared by the Government and the furnished CADD files, the signed and sealed construction documents shall govern. The Contractor is responsible for determining if any conflict exists. Use of these CADD files does not relieve the Contractor of duty to fully comply with the contract documents, including and without limitation, the need to check, confirm and coordinate the work of all contractors for the project.

If the Contractor uses, duplicates and/or modifies these electronic CADD files for use in producing construction drawings and data related to this contract, all previous indicia of ownership (seals, logos, signatures, initials and dates) shall be removed.

1.7 CLEANUP

Leave premises "broom clean." Clean interior and exterior glass surfaces exposed to view; remove temporary labels, stains and foreign substances; polish transparent and glossy surfaces; vacuum carpeted and soft surfaces. Clean equipment and fixtures to a sanitary condition. Replace filters of operating equipment. Clean debris from roofs, gutters, downspouts and drainage systems. Sweep paved areas and rake clean landscaped areas. Remove waste and surplus materials, rubbish and construction facilities from the site.

PART 2 PRODUCTS

Not used.

PART 3 EXECUTION

Not used.

-- End of Section --

SECTION 01 31 19.05 20

POST AWARD MEETINGS
06/13

PART 1 GENERAL

1.1 SUMMARY

This document includes post-award requirements for project kickoff and subsequent design and preconstruction meetings.

1.2 SUBMITTALS

The use of a "G" following a submittal indicates that a Government approval action is required. Submit the following in accordance with Section 01 33 10.05 20 DESIGN SUBMITTAL PROCEDURES.

SD-01 Preconstruction Submittals

Design Submittal Packaging Proposal; G

Project Schedule; G

Performance Assessment Plan (PAP);

G CDW Facilitator Experience

Resume; G CDW Preliminary Concept

Design; G CDW Cost Estimate; G

Concept Design Workshop Report; G

1.3 POST AWARD KICKOFF MEETING

The Post Award Kickoff (PAK) meeting is made up of Contract Administration, Partnering, and Scheduling. If mutually beneficial to the Contractor and the Government, these three elements may be addressed in a single multi day meeting but most often multiple scheduled meetings are required. Schedule a separate meeting to accomplish the Concept Design Workshop(CDW).

1.3.1 PAK Meeting Schedule and Location

Within 35 calendar days after contract award, and prior to commencing work, meet with the Contracting Officer for the PAK meeting(s). The meeting shall be located at a commercial noted meeting room arranged for and paid for by the Contractor on a date and time approved by the Contracting Officer.

1.3.2 PAK Meeting Outcomes

The meeting(s) outcomes

are:

a. Integrate the Contractor and all client representatives into the project team.

b. Achieve consensus from the project team on any issues and concerns with the Contractor's technical proposal and the User's functional requirements. Confirm the design is within the project budget.

c. Establish and explain policies and procedures for completion of a successful project.

d. Establish clear lines of communication and points of contact for Government and Contractor team members.

e. Establish project design schedule, design submittal packaging, and preliminary construction schedule in accordance with Section 01 32
17.05 20 NETWORK ANALYSIS SCHEDULE (NAS) FOR DESIGN-BUILD. Discuss design milestones and events that will be included in the Quality Control Communication Plan.

f. Establish clear expectations and schedules for facility turnover, providing DD Form 1354 asset management records, eOMSI submittals, and training of Government maintenance personnel.

g. Establish procedure for design packages reviews, Contractor's resolution to comments, and Government's role in review of packages.

h. The facility users will present their functional requirements to the design team.

i. Establish clear expectations for the Concept Design Workshop.

1.3.3 PAK Meeting Contractor Attendees

The following Contractor key personnel shall attend the PAK: Project Manager, Project Scheduler, Lead Designer-of-Record (DOR)for each design architectural/engineering discipline, Superintendent, QC Manager, DQC Manager and the Commissioning Authority (CA). Optional attendees include: Principal, Assistant Project Manager, major subcontractors and specialized supplemental QC personnel.

1.3.4 Contract Administration

Contract administration roles and responsibilities will be addressed.

1.3.5 Partnering

To most effectively accomplish this contract, the Government requires the formation of a cohesive partnership within the Project Team whose members are from the Government, Contractor and its Subcontractors. Key Personnel from the Supported Command, End User (who will occupy the facility), NAVFAC (Echelon III and/or IV), Navy Region/Installation, Contractor and Subcontractors and the Designer of Record will be invited to participate in the Partnering process. The Partnership will draw on

the strength of each organization in an effort to achieve a project without any safety mishaps, conforming to the Contract, within budget and on schedule.

Information on the Partnering Process and a list of Key and Optional personnel who should attend the Partnering meeting are available from the Contracting Officer.

The Facilitator shall be experienced in conducting Partnering Workshops and acceptable to both the Government and Contractor. The Facilitator is responsible for leading the team in a timely manner and making sure that issues are identified and resolved. A list of Partnering Facilitators is available from the Contracting Officer.

INFORMAL PARTNERING: The Contracting Officer shall organize the Partnering Sessions with key personnel of the project team, including Contractor's personnel and Government personnel.

The Initial Informal Partnering session should be a part of the DB Post Award Kickoff (PAK) . Partnering sessions should be held at a location agreed to by the Contracting Officer and the Contractor (typically a conference room provided by the PWD FEAD/ROICC office or the Contractor).

The Initial Informal Partnering Session will be conducted and facilitated using electronic media (a video and accompanying forms) provided by Contracting Officer.

The Partners will determine the frequency of the follow-on sessions.

1.3.6 Performance Assessment Plan (PAP)

The Performance Assessment Plan (PAP) shall be used to document design innovation and budget management, provide performance feedback to the Contractor, and as a basis for interim and final evaluations in the Construction Contractor Appraisal System (CCASS) on-line database.

It is the intent of the Government to establish the PAP based on tangible, measurable indicators of outstanding contractor performance, and on commitments made in the Contractor's proposal. The initial PAP may be found on the NAVFAC Design-Build Request for Proposal Website in RFP PART6 Attachments. Review and finalize the initial PAP during the Partnering Session. During the initial Partnering Session, the Government, the Contractor, the Designer-of-Record, and the Client will establish the PAP. Following the establishment of the PAP, the Contractor will present it, with his input, for update and discussion at projects meetings which discuss project performance. Submit an updated PAP on a monthly basis with the invoice for that period as a minimum.

1.3.7 Project Schedule

Provide in accordance with Section 01 32 17.05 20 NETWORK ANALYSIS SCHEDULES (NAS) FOR DESIGN-BUILD.

1.3.8 Concept Design Workshop (CDW)

Schedule a multi-day meeting, 10 work days minimum, to accomplish the Concept Design Workshop (CDW). Buildings shall be presented individually during the CDW. Combining the PAK meetings and the CDW

meeting(s) is not permitted.

Provide a CONCEPT DESIGN WORKSHOP that meets the following requirements;

1.3.8.1 CDW General Requirements

a. Methodology. A concept Design Workshop will be conducted for this project. The CDW must be held a minimum of 30 calendar days after the conclusion of the Post Award Kickoff meeting and prior to commencing work. This effort will examine project functions and requirements, quality and life safety costs, analyze alternate design concepts, expose and resolve project issues, and develop the final conceptual design.

b. Facilitator. Provide a Facilitator who is experienced in conducting Concept Design Workshops. Submit a CDW Facilitator Experience Resume to the Contracting Officer describing his experience. He or she will be responsible for leading the team in a timely manner, making sure that issues are pursued and resolved to the maximum extent possible, documenting meetings, organizing the design concept documents for on-site approval, and providing the Concept Design Workshop Report.

c. Contractor's Design Team. The primary functions of the Design Team will be to investigate, develop and present alternate design solutions. The entire Design Team will participate in all phases of the Concept Design Workshop effort and provide assistance to the Facilitator in development of the Concept Design Workshop Report, including most of the required documentation.

d. Concept Design Workshop Report. Produced almost entirely on-site, the Concept Design Workshop Report will summarize the final conceptual design.

e. Award Amount. At each contract stage, the Contractor shall verify that the concept is within the contract award amount.

1.3.8.2 CDW Procedures

a. Preliminary Work.
The Contractor's Design Team shall complete the following prior to the on-site workshop:

(1) Review the contract documents and references explaining the project scope and history.

(2) Prepare and submit, at least 14 days in advance of the CDW, 30 copies of a CDW Preliminary Concept Design (Concept #1), a Basis of Design, and a statement that the concept provided is within the award amount.

(3) Make arrangements for and provide an appropriate conference room convenient to the project site and/or Users for use by the Design Team and government participants during the workshop.

(4) Incorporate government comments in a revised Concept #1 and produce at least 30 copies of the revised Concept #1 documents for distribution at the workshop.

(5) Facilitator conducts meeting with NAVFAC representatives before the CDW to review preparations, relationships, and the status of work to be accomplished.

b. On-Site Workshop.
The Design Team shall accomplish the following items during the on-site phase of the CDW. (Typically conducted in four to six working days, minimizing breaks so as to maintain momentum. The Design Team should expect longer than normal workdays.)

(1) On the first day of the workshop, meet with the using activity, Station and other Government representatives. The Facilitator will describe the CDW process and review the workshop agenda. The user(s) will provide a functional presentation. This is to reiterate to all participants the User(s) needs and desires. The intent is to make the design solution and issue resolution function-oriented.

(2) Present the revised Concept #1 and respond to questions.

(3) Participate in a comment/creative session to generate ideas to improve this project in the areas of function, quality and total life cycle cost, issue resolution and sustainable design within the award amount. It is often helpful to request User comments in writing so they may be considered, responded to, and presented at subsequent presentations.

(4) Create a new concept design. Design concepts shall include drawings, sketches, and other graphics as necessary to fully describe the concept. Prepare 30 copies for distribution at all presentations.

(5) Repeat applicable steps as necessary. Usually, three concepts are required. The final concept must be within the contract award amount.

(6) The final concept shall include the following:

(a) Site Plan (where exterior work is to be performed):Show the layout of the proposed facility in relation to major landmarks. Show all buildings, access roads, parking, pedestrian walkways, roads, sidewalks, landscaping, and major utilities.

(b) Building Floor Plans: Provide floor plans depicting equipment layout. Where work will impact egress, occupancy, or significant impact to the fire alarm system, provide a Life Safety Code analysis with the floor plan to identify required life safety and egress features.

(c) Mechanical Plans: Provide plans as necessary to show the essential work and intent of the design. Suggestions include equipment layouts, zones, etc.

(d) Electrical Plans: Provide plans as necessary to show the essential work and intent of the design. Suggestions include special light fixture types, locations, switching, power outlets and panelboard location. Provide electrical

distribution single line diagram.

(e) Basis of Design: Describe the intent of the design by discipline. Address material quality, energy efficiency and life cycle costs.

(f) System Safety Engineering

(7) Prepare 30 copies of the final concept (drawings, basis of design and statement that the concept is within the award amount) for distribution at the final presentation.

(8) Dependent upon the project, the Concept Design Workshop Report is provided by the Facilitator, includes all items included in the final concept design and the following:

(a) Endorsements: Include a copy of the signature/endorsement sheet.

(b) Comments: Include comments and resolutions concerning the final concept design.

(c) Executive Summary: Summarize the workshop, including how the various concepts differed and were improved during the workshop.

(d) Special Design Features: Identify and describe unique project needs and features, e.g., pile foundations, physical security, intrusion detection systems, access control, construction in humid climates, pollution abatement, tempest, HEMP, etc.

(e) Architectural Compatibility Statement: Identify architectural style, materials, and color scheme; and indicate their compatibility with installation planning and design concepts established in the Base Exterior Architectural Plan.

(f) Environmental Summary: Provide a summary of environmental issues, listing completed actions and items requiring further coordination, waivers or permits.

(g) Supporting Project Documentation: Include data to support the development of the concept design, layout, and special features. Items should include: project scope discussion, minutes of meetings, function analysis work sheets, and economic and technical analyses if alternatives evaluated.

(9) Except for final comments, responses and endorsements, the final report should be completed (electronically) on site, before the final presentation.If requested by the NAVFAC Project Manager, be prepared to present up to 10 hard copies of the report at the conclusion of the workshop.

1.3.8.3 Conduct a "front-to-back" comprehensive presentation of the final concept. Obtain user signatures on a conceptual design endorsement sheet, signifying approval of the concept design, subject to the final comments and their resolutions agreed to at the final presentation meeting. Concept Design Workshop Report

Within 14 calendar days of completion of the on-site Concept Design Workshop, the Design Team shall submit to the NAVFAC Project Manager an electronic copy of the Concept Design Workshop Report as one file in .PDF format. PDF document to be bookmarked by section. PDF to be searchable.
Provide 15 hard copies of the Final Concept Workshop Report: 5 copies to NAVFAC PM, 4 copies to FEAD Construction Manager, 2 copies to Sponsor FECC, 4 copies to EOD FAC Manager.

1.3.8.4 CDW Meeting Attendees

The following Contractor key personnel shall attend the CDW: Project Manager, Project Scheduler, Cost Estimator, Lead Designer of Record, Design Staff representing each architectural/engineering discipline and Major Subcontractors when facility design is discussed, Superintendent, QC Manager, and DQC.

1.4 DESIGN QUALITY ASSURANCE MEETINGS

After Government Quality Assurance (QA) of each Design Submittal has been completed, meet with the Government for a one-day conference to discuss review comments for the specific design submittal.

Provide consolidated copies of all Government comments with annotations of Contractor's action beside them. Notify the Contracting Officer in writing within five (5) days after receipt of Government's comments if the Contractor disagrees with comments technically or interprets comments to exceed the requirements of the contract.

1.4.1 Design QA Meeting Attendees

The following Contractor key personnel shall attend the design QA meetings: Project Manager, QC Manager, Commissioning Authority, and Contractor's Design Staff (architect and engineering disciplines related to topics to be discussed).

1.4.2 Design QA Meeting Location

Meetings shall be located at the office of the Contracting Officer's QA Team or may be conducted at other locations or by other electronic means if mutually acceptable to all parties.

1.4.3 Minimum Design QA Meeting Agenda

Address all Government comments that are unresolved and present clarification or supporting information requested by the Contracting Officer's QA team during the previous meeting.

1.5 PRECONSTRUCTION MEETING

Meet with the Contracting Officer to discuss construction items of concern to the Government and the Contractor such as outages, storage, trailer location, disposal of construction debris, and safety, at a location to be determined by the Contracting Officer. The Preconstruction meeting may take place with the PAK meeting or at any time prior to mobilization and before any construction work begins.

1.6 RECURRING MEETINGS

1.6.1 Quality Control and Production Meetings

Quality Control and Production Meetings in accordance with Section 01 45 00.05 20 DESIGN AND CONSTRUCTION QUALITY CONTROL.

1.6.2 Safety Meetings

Safety Meetings in accordance with Section 01 35 26.05 20 GOVERNMENT SAFETY REQUIREMENTS FOR DESIGN-BUILD.

1.6.3 eOMSI Meetings

Refer to Section 01 78 24.00 20 FACILITY ELECTRONIC OPERATIONS AND MAINTENANCE INFORMATION for requirements.

1.7 FACILITY TURNOVER PLANNING MEETINGS

Key personnel will meet to identify strategies to ensure the project is carried to expeditious closure and turnover to the Client. Start the turnover process at the PAK Meeting and convene the Facility Turnover Meetings once the project has reached approximately 75% completion or three to six months prior to Beneficial Occupancy Date (BOD), whichever comes first. The Contracting Officer's Representative will lead the meetings and guide the discussions based on an agenda provided by the Government. The Facility Turnover effort shall include the following:

a. PAK Meeting -

1. Contracting Officer's Technical Representative (COTR) will provide the NRZ Checklist and the Contractor, Client, and NAVFAC Representatives will compare Contractor's schedule to NRZ Checklist to ensure all Contractor Checklist Items are included in the schedule and to discuss the scheduling impact of Client and NAVFAC Checklist Items.

2. Discuss the requirements of creating the Draft and finalizing the Interim DD Form 1354 to provide asset management records to the Government. Refer to Section 01 33 10.05 20 DESIGN SUBMITTAL REQUIREMENTS for requirements.

b. Facility Turnover Meetings -

1. Fill in the NRZ Checklist including Contractor, Client,and NAVFAC Checklist Items and assigned a person responsible for each item and a due date. The Contracting Officer's Representative will facilitate the assignment of responsibilities and fill out the NRZ Checklist.

2. Review the Contractor's updated schedule. The Contractor shall develop a POAM for the completion of all Contractor, Client, and NAVFAC Checklist items.

3. Confirm that all NRZ Checklist items will be completed on time for the scheduled Facility Turnover.

4. The Contractor shall lead a discussion of the Final eOMSI

submittal. Assign responsibility and schedule for the provision of all information necessary to complete the eOMSI Spreadsheet Workbook for facility turnover.

5. Schedule and coordinate the facility training of Government maintenance personnel.

1.7.1 Facility Turnover Meeting Attendees

The following key personnel shall attend the Facility Turnover Meetings: Contractor QC Manager, Design Quality Control Manager, Superintendent, Major Subcontractors, Designer-of-Record, Contracting Officer's Representative, Project Sponsor, Representative(s) of NAVFAC, the Facility Owner/ Real Property Accounting Officer, Public Works Facility Maintenance Specialist, and the Client.

PART 2 PRODUCTS

Not Used.

PART 3 EXECUTION

Not Used.

-- End of Section --

SECTION 01 32 16.05 20

DESIGN AND CONSTRUCTION PROGRESS DOCUMENTATION
7/09

PART 1 GENERAL

1.1 SUBMITTALS

Government approval is required for submittals with a "G" designation; submittals not having a "G" designation are for Contractor Quality Control approval. The following shall be submitted in accordance with Section 01
33 00.05 20 CONSTRUCTION SUBMITTAL PROCEDURES and Section 01 33 10.05 20 DESIGN SUBMITTAL PROCEDURES, except as modified in this contract.

SD-01 Preconstruction Submittals

Design and Construction Schedule; G

1.2 ACCEPTANCE

Prior to the start of work, prepare and submit to the Contracting Officer for acceptance a design and construction schedule in the form of a Network Analysis Schedule (NAS) in accordance with the terms in Contract Clause "FAR 52.236-15, Schedules for Construction Contracts," except as modified in this contract. Acceptance of an error free Baseline Schedule and updates is a condition precedent to processing the Contractor's pay request.

1.3 SCHEDULE FORMAT

1.3.1 Network Analysis Schedule (NAS)

The Contractor shall use the critical path method (CPM) to schedule and control project activities. Project schedules shall be prepared and maintained using Primavera P3, Primavera SureTrak or current mandated scheduling program. Save files in Concentric P3 or current mandated scheduling program file format, compatible with the Governments version of the scheduling program. Importing data into P3/SureTrak/current mandated scheduling program using data conversion techniques or third party software will be cause for rejection of the submitted schedule. The schedule shall be built as follows:

The Project Schedule shall show design periods, submittals, government review periods, material/equipment delivery, utility outages, all on-site construction, inspection, testing, and closeout activities. Government and Contractor on-site work activities shall be driven by calendars that reflect Saturdays, Sundays and all Federal Holidays as non-work days.

With the exception of the Contract Award, Start Contract and End Contract

milestone activities, no activities shall be open-ended; each activity shall have predecessor and successor ties.

Date/time constraint(s) and/or lags, other than those required by the contract, shall not be allowed unless accepted by the Contracting Officer. The Contractor shall include as the last activity in the contract schedule, a milestone activity named "Contract Completion Date". The "Contract Completion Date" milestone shall have a "Mandatory Finish" constraint equal to the contract completion date.

Each activity shall be assigned its appropriate Responsibility Code indicating responsibility to accomplish the work indicated by the activity, Phase Code and Work Location Code.

1.3.1.1 NAS Submittals and Procedures

Submit all network analysis and updates in hard copy and on electronic media that is acceptable to the Contracting Officer. Submit an electronic back-up of the project schedule in an import format compatible with the governments scheduling program.

1.4 UPDATED SCHEDULES

Update the Design and Construction schedule at monthly intervals or when the schedule has been revised. The updated schedule shall be kept current, reflecting actual activity progress and plan for completing the remaining work. Submit copies of purchase orders and confirmation of delivery dates as directed.

1.5 THREE-WEEK LOOK AHEAD SCHEDULE

The Contractor shall prepare and issue a 3-Week Look Ahead schedule to provide a more detailed day-to-day plan of upcoming work identified on the Design and Construction Schedule. The work plans shall be keyed to activity numbers when a NAS is required and updated each week to show the planned work for the current and following two-week period. Additionally, include upcoming outages, closures, preparatory meetings, and initial meetings. Identify critical path activities on the Three-Week Look Ahead Schedule. The detail work plans are to be bar chart type schedules, maintained separately from the Design and Construction Schedule on an electronic spreadsheet program and printed on 8-½ by 11 sheets as directed by the Contracting Officer. Activities shall not exceed 5 working days in duration and have sufficient level of detail to assign crews, tools and equipment required to complete the work. Three hard copies and one electronic file of the 3-Week Look Ahead Schedule shall be delivered to the Contracting Officer no later than 8 a.m. each Monday and reviewed during the weekly CQC Coordination Meeting.

1.6 CORRESPONDENCE AND TEST REPORTS

All correspondence (e.g., letters, Requests for Information (RFIs), e-mails, meeting minute items, Production and QC Daily Reports, material delivery tickets, photographs, etc.) shall reference Schedule activities that are being addressed. All test reports (e.g., concrete, soil compaction, weld, pressure, etc.) shall reference schedule activities that are being addressed.

PART 2 PRODUCTS

Not used.

PART 3 EXECUTION

Not used.

SECTION 01 32 17.05 20

NETWORK ANALYSIS SCHEDULES (NAS) FOR DESIGN-BUILD
2/13

PART 1 GENERAL

1.1 DESCRIPTION

The Contractor is responsible for scheduling all design, procurement and construction. A single schedule shall logically incorporate all design and construction for the entire project. Unless otherwise indicated, the contractor may begin construction when design is signed, stamped and submitted to the Government via the Contractor's quality control organization.

If Government approval is required for any portion of a final signed and sealed design package prior to construction, that review time shall be included in the schedule. The schedule shall also include times for procurement, Contractor quality control and construction, acceptance testing and training. Refer to Specification Section 01 33 00.05 20 Construction Submittal Procedures to determine if any items require Government approval prior to construction; if any are required, that submittal review time shall be included in the schedule.

The schedule is a tool to manage the project, both for Contractor and Government activities. It will also be used to measure progress and to evaluate time extensions. If cost-loaded, it will provide the basis for progress payments.

The Contractor shall use the Critical Path Method (CPM) and the Precedence Diagram Method (PDM) to satisfy time and cost applications. For consistency, when scheduling software terminology is used in this specification, the terms in Primavera's scheduling programs are used.

1.2 SUBMITTALS

The use of a "G" following a submittal indicates that a Government approval action is required. Submit the following in accordance with Section 01 33 10.05 20 DESIGN SUBMITTAL PROCEDURES and Section 01 33 00.05
20 CONSTRUCTION SUBMITTAL PROCEDURES, except as modified in this

contract. SD-01 Preconstruction Submittals

Qualifications; G

Design Baseline Network Analysis Schedule Package; G

Construction Baseline Network Analysis Schedule Package; G

SD-07 Certificates

Monthly Network Analysis Schedule Updates;

G SD-11 Closeout Submittals

As-Built Schedule; G

1.3 SCHEDULE ACCEPTANCE PRIOR TO START OF WORK

Government review comments on the Contractor's schedule(s) shall not relieve the Contractor from compliance with requirements of the Contract Documents.

The Design Baseline Network Analysis Schedule (NAS) shall be submitted and presented to the Government at the PAK Meeting. The acceptance of a Design Baseline NAS is a condition precedent to processing Contractor's pay request(s) for design activities/items of work.

Only bonds shall be paid prior to acceptance of the Design Baseline Network Analysis Schedule (NAS).

The most current updated design schedule shall accompany each design submittal.

The Contracting Officer and Contractor shall participate in a preliminary meeting(s) to discuss the proposed schedule and requirements of this section prior to the Contractor preparing the Construction Baseline Network Analysis Schedule.

The acceptance of a Construction Baseline NAS is a condition precedent to:

1. The Contractor starting work on the demolition or construction stage(s) of the contract.

2. Processing Contractor's pay request(s) for construction activities/items of work.

3. Review of any schedule updates

Submittal of the Baseline Network Analysis Schedules, and subsequent schedule updates, shall be understood to be the Contractor's certification that the submitted schedule meets all of the requirements of the Contract Documents, represents the Contractor's plan on how the work shall be accomplished, and accurately reflects the work that has been accomplished and how it was sequenced (as-built logic).

1.4 SOFTWARE

Project schedules must be prepared and maintained using Primavera P3, Primavera SureTrak or current mandated scheduling program. Save files in Concentric P3 or current mandated scheduling program file format, compatible with the Governments version of the scheduling program. Importing data into P3/SureTrak/current mandated scheduling program using data conversion techniques or third party software will be cause for rejection of the submitted schedule.

1.5 QUALIFICATIONS

The designated Scheduler for the project shall have prepared and maintained at least 3 previous schedules of similar size and complexity

of this contract using SureTrak/P3 or current mandated scheduling program. A resume outlining the qualifications of the Scheduler shall be submitted for acceptance to the Contracting Officer. Payment will not be processed until an acceptable Scheduler is provided.

1.6 NETWORK SYSTEM FORMAT

The system shall include time scaled logic diagrams and specified reports.

1.6.1 Diagrams

Provide Time-scaled Logic Diagram printed in color on ANSI D size sheets. The diagram shall clearly show activities on the critical path.Include the following information for each activity:

a. Activity ID

b. Activity Description

c. Original Duration in Work Days

d. Remaining duration

e. Percent Complete

f. Early Start Date

g. Early Finish Date

h. Total Float

1.6.2 Schedule Activity Properties and Level of Detail

The NAS shall identify all Design, Government, Construction Quality Management (CQM), Construction activities planned for the project and all other activities that could impact project completion if delayed. Separate activities shall be created for each Phase, Area, Floor Level and Location the activity is occurring. Activity categories included in the schedule are specified below.

With the exception of the Contract Award and Contract Completion Date (CCD) milestone activities, no activity shall be open-ended; each activity shall have predecessor and successor ties. Once an activity exists on the schedule it may not be deleted or renamed to change the scope of the activity and shall not be removed from the schedule logic without approval from the Contracting Officer. The ID number for a deleted activity shall not be re-used for another activity. No more than 20 percent of the activities shall be critical or near critical. Critical is defined as having zero days of Total Float. "Near Critical" is defined as having Total Float of 1 to 14 days. Contractor activities shall be driven by calendars that reflect Saturdays, Sundays and all Federal Holidays as
non-work days. Government availability for construction submittal review, meeting attendance, performance verification testing, acceptance inspections, etc, will be extremely limited between Christmas and New Years Days.

1.6.2.1 Activity Categories

a. Design Activities: Design activities shall include design decision points, design submittal packages, including any critical path submittals for Fast Tracked Phases. Review times for design development packages shall be included in the schedule. Refer to Specification Section 01 33 10.05 20 Design Submittal Procedures, for specific requirements.

b. Procurement Activities: Examples of procurement activities include, but are not limited to; Material/equipment submittal preparation, submittal and approval of material/equipment; material/equipment fabrication and delivery, and material/equipment on-site. As a minimum, separate procurement activities will be provided for critical items, long lead items, items requiring government approval and material/equipment procurement for which payment will be requested in advance of installation. The Contractor shall show each delivery with relationship tie to the Construction Activity specifically for the delivery.

c. Government Activities: Government and other agency activities that could impact progress shall be clearly identified. Government activities include, but are not limited to; Government approved submittal reviews, Government conducted inspections/tests, environmental permit approvals by State regulators, utility outages, Design Start, Construction Start, (including Design/Construction Start for each Fast-Track Phase, and delivery of Government Furnished Material/Equipment.

d. Quality Management (QM) Activities: CQM Activities shall identify the Preparatory Phase and Initial Phase for each Definable Feature of Work identified in the Contractor's Quality Control Plan. These activities shall be added to each Three-Week Look Ahead Schedule referenced in the paragraph entitled "THREE-WEEK LOOK AHEAD SCHEDULE" and will also be included in each monthly update. The Follow-up Phase will be represented by the Construction Activities in the Baseline Schedule and in the schedule updates.

e. Construction Activities: No on-site construction activity shall have a duration in excess of 20 working days. Separate construction activities shall be created for each Phase, Area, Floor Level and Location the activity is occurring. Contractor activities shall be driven by calendars that reflect Saturdays, Sundays and all Federal Holidays as non-work days, unless otherwise defined in this contract. Government availability for construction submittal review, meeting attendance, performance verification testing, acceptance inspections, etc, will be extremely limited between Christmas and New Years Days

f. Turnover and Closeout Activities: Include a separate section with all items on the Navfac Red Zone Checklist/POAM that are applicable to this project. The checklist will be provided at the PAK meeting. As a minimum, this will include all testing, specialized inspection activities, Pre-Final inspection, Punch List Completion, Final Inspection and Acceptance. Add a milestone for the Facility Turnover Planning Meeting at approximately 75% construction contract completion or three to six months prior to BOD, whichever is sooner.

1.6.2.2 Contract Milestones and Constraints

a. Project Start Date Milestones: The Contractor shall include as the first activity on the schedule a start milestone titled "Contract Award", which shall have a Mandatory Start constraint equal to the

Contract Award Date.

b. Projected Completion Milestone: The Contractor shall include an unconstrained finish milestone on the schedule titled "Projected Completion". Projected Completion is defined as the point in time the Government would consider the project complete and ready for its intended use. This milestone shall have the Contract Completion (CCD) milestone as its only successor.

c. Contract Completion Date (CCD) Milestone: The Contractor shall include as the last activity on the schedule a finish milestone titled "Contract Completion (CCD)", which shall have a Mandatory Finish constraint equal to the current Contract Completion Date. Calculation of schedule updates shall be such that if the finish of the "Projected Completion" milestone falls after the contract completion date, then negative float will be calculated on the longest path and if the finish of the "Projected Completion" milestone falls before the contract completion date, the float calculation shall reflect positive float on the longest path. The only predecessor to the Contract
Completion Date Milestone shall be the Projected Completion milestone .

1.6.2.3 Activity Code

At a minimum, the Contractor shall establish activity codes identified in this specification and 3 additional activity codes identified by the Contracting Officer. Once established, activity codes and values cannot be changed without approval by the Contracting Officer.

a. Phase: All activities shall be assigned a 4-digit code value based on the contract phase it occurs in.

b. Area Code: All activities shall be assigned an area code value identifying the Area in which the activity occurs. Activities shall not belong to more than one area. Area is defined as a distinct space, function or activity category; such as, separate structure(s), sitework, project summary, construction quality management, material/equipment procurement, etc.

c. Work Item: All activities in the project schedule shall be assigned a 4-digit Work Item code value. Examples of Work Item code values include but are not limited to water lines, drain lines, building pad
and foundation, slab on grade, walls and columns, suspended slab, roof structure, roofing, exterior finish systems, interior rough-in, and finishes, etc.

d. Location 1: Assign a 4-digit Location 1 code value to activities associated with multistory structures. Code values are used to identify the floor level where an activity is

occurring.

e. Location 2: Assign a 4-digit Location 2 code value to all activities to identify the location within an Area, Work Item or Building Level that an activity is occurring.

f. Responsibility Code: All activities in the project schedule shall be identified with the party responsible for completing the task. Activities shall not belong to more than one responsible party.

1.6.2.4 Anticipated Weather Delays

The Contractor shall use the National Oceanic and Atmospheric Administration's (NOAA) historical monthly averages for the NOAA location closest to the project site as the basis for establishing a "Weather Calendar" showing the number of anticipated non-workdays for each month due to adverse weather, Saturdays, Sundays and all Federal Holidays as non-work days.

Assign the Weather Calendar to any activity that could be impacted by adverse weather. The Contracting Officer will issue a modification in accordance with the contract clauses, giving the Contractor a time extension for the difference of days between the anticipated and actual adverse weather delay if the number of actual adverse weather delay days exceeds the number of days anticipated for the month in which the delay occurs and the adverse weather delayed activities critical to contract completion. A lost workday due to weather conditions is defined as a day in which the Contractor cannot work at least 50 percent of the day on the impacted activity.

1.6.2.5 Cost Loading

a. Cost Loading Activities: Costs for incremental design preparation shall be assigned to the respective design phase submittal milestone(s). Material and Equipment Costs for which payment will be requested in advance of installation shall be assigned to their respective procurement activity (i.e., the material/equipment on-site activity). All other construction costs shall be assigned to their respective Construction Activities. The value of inspection/testing activities shall not be less than 10 percent of the total costs for Procurement and Construction Activities. Evenly disperse overhead and profit to each activity over the duration of the project.

b. Quantities and Units of Measure: Each cost loaded activity shall have a detailed quantity breakdown and unit of measure.

1.6.3 Schedule Software Settings and Restrictions

a. Activity Constraints: Date/time constraint(s), other than those required by the contract, will not be allowed unless accepted by the Contracting Officer. Identify any constraints proposed and provide an explanation for the purpose of the constraint in the Narrative Report.

b. Default Progress Data Disallowed: Actual Start and Actual Finish dates on the CPM schedule shall match the dates on the Contractor

Quality Control and Production Reports.

c. Software Settings: Schedule calculations and Out-of-Sequence progress (if applicable) shall be handled through Retained Logic, not Progress Override. All activity durations and float values will be shown in days. Activity progress will be shown using Remaining Duration. Default activity type will be set to "Task". The project "Must Finish By" date shall be left blank.

1.6.4 Required Tabular Reports

The following reports shall be included with the schedule and update submittals:

a. Log Report: Listing of all changes made between the previous schedule and current updated schedule.

b. Narrative Report: Identify and justify; 1) Progress made in each area of the project; 2) Critical Path; 3) Date/time constraint(s), other than those required by the contract 3) Changes in the following; added or deleted activities, original and remaining durations for activities that have not started, logic, milestones, planned sequence of operations, critical path, and cost loading; 4) Any decrease in previously reported activity Earned Amount; 5) Pending items and status thereof, including permits, changes orders, and time extensions; 6) Status of Contract Completion Date and interim milestones; 7) Current and anticipated delays (describe cause of delay and corrective actions(s)); and 8) Description of current and future schedule problem areas. Each entry in the narrative report will cite the respective Activity ID and Activity Description, the date and reason for the change, and description of the change.

c. Earned Value Report: Listing all activities having a budget amount cost loaded. Compilation of total earnings on the project from notice to proceed to current progress payment request. Group and sort activities as directed by the Contracting Officer. Show current budget, previous physical percent complete, to-date physical percent complete, previous earned value, to-date earned value and cost to complete on the report for each activity:

d. Schedule Variance Control (SVC) Diagram: With each schedule submission, provide a SVC diagram showing 1) Cash Flow S-Curves indicating planned project cost based on projected early and late activity finish dates and 2) Earned Value to-date. Revise Cash Flow S-Curves when the contract is modified, or as directed by the Contracting Officer.

1.7 SUBMISSION AND ACCEPTANCE

The Design Baseline NAS shall include detailed design activities, general (summarized) approach for the construction phase(s) of the project and required milestone activities. If the project is being Fast-Tracked or allows Early Start of construction, the Design Baseline Project Schedule shall include all fast-tracked design construction phases, etc., including the required or proposed critical path design submittals within each phase that shall occur during the duration of the

project.

The Contractor shall develop the Construction Baseline Schedule as design progresses, with detailed construction activities. If design must be completed and accepted prior to construction, submit the complete design and construction network analysis schedule and obtain acceptance prior to starting construction work. If the project will be Fast-Tracked, each construction stage shall be detailed and built upon the previous
Fast-Tracked Baseline Schedule (including any interim updates) and accepted prior to starting that stage of the construction work. Payment for completed work is dependent on an accepted, detailed schedule for that portion of work.

1.7.1 Monthly Network Analysis Schedule Updates

Contractor and Government representatives shall meet at monthly intervals to review and agree on the information presented in the updated project schedule. The submission of an acceptable, updated schedule to the

Government is a condition precedent to the processing of the Contractor's pay request. If a Schedule of Prices is the basis for progress payments, it shall be consistent with the logic and activity breakdowns on the progress schedule. If progress payments are based on a cost-loaded schedule, the Contractor and Government shall agree on percentage of payment for each activity progressed during the update period.

Provide the following with each Schedule submittal:

a. Time Scaled Logic Diagram.

b. Reports listed in paragraph entitled "Required Tabular Reports."

c. Data disks containing the project schedule. Include the back-up native .prx/curren mandated schedule program files.

1.7.2 As-Built Schedule

As a condition precedent to the release of retention and making final payment, submit an "As-Built Schedule," as the last schedule update showing all activities at 100 percent completion. This
schedule shall reflect the exact manner in which the project was actually constructed.

1.8 CONTRACT MODIFICATION

Submit a Time Impact Analysis with each cost and time proposal for a proposed change. Time Impact Analysis (TIA) shall illustrate the influence of each change or delay on the Contract Completion Date or milestones. No time extensions will be granted nor delay damages paid unless a delay occurs which consumes all available Project Float, and extends the Projected Finish beyond the Contract Completion Date.

a. Each TIA shall be in both narrative and schedule form

demonstrating the delay impact. The TIA shall identify the predecessors to the new activities and demonstrate the impacts to successor activities. The Contractor shall run the schedule calculations and submit the impacted schedule with the proposal or claim.

b. The TIA schedule submitted with the proposal shall show all activity progress as of the date of the proposal. If the impact to the schedule occurs prior to the proposal submission, the TIA schedule shall be updated to show all activity progress as of the time of the impact. If the proposed change does not impact the CCD, no TIA shall be required.

c. Submit Data disks containing the TIA schedule. Include the back-up native .prx/current mandated schedule program files.

d. Unless the Contracting Officer requests otherwise, only conformed contract modifications shall be added into the Project NAS.

1.9 FLOAT

Project Float is the length of time between the Contractor's Projected Finish Milestone and the Contract Completion Date Milestone. Project Float available in the schedule, at any time shall not be for the exclusive use of either the Government or the Contractor.

1.10 THREE-WEEK LOOK AHEAD SCHEDULE

The Contractor shall prepare and issue a 3-Week Look Ahead schedule to provide a more detailed day-to-day plan of upcoming work identified on the Project Network Analysis Schedule. The work plans shall be keyed to NAS activity numbers and updated each week to show the planned work for the current and following two-week period. Additionally, include upcoming outages, closures, preparatory meetings, and initial meetings. Identify critical path activities on the Three-Week Look Ahead Schedule. The detail work plans are to be bar chart type schedules, maintained separately from the Project NAS on an electronic spreadsheet program and printed on
8-½ by 11 sheets as directed by the Contracting Officer. Activities shall not exceed 5 working days in duration and have sufficient level of detail to assign crews, tools and equipment required to complete the work. Three hard copies and one electronic file of the 3-Week Look Ahead Schedule shall be delivered to the Contracting Officer no later than 8
a.m. each Monday and reviewed during the weekly CQC Coordination

Meeting. PART 2 PRODUCTS

Not used.

PART 3 EXECUTION

Not used.

-- End of Section --

SECTION 01 33 00.05 20

CONSTRUCTION SUBMITTAL

PROCEDURES
02/11

PART 1 GENERAL

1.1 RELATED REQUIREMENTS

This section covers construction submittals that are not included in the design submittals. Submit design submittals in accordance with 01 33
10.05 20 DESIGN SUBMITTAL PROCEDURES. When using Unified Facility Guide Specifications (UFGS) sections that reference Section 01 33 00 SUBMITTAL PROCEDURES, change reference to this section, Section 01 33 00.05 20 CONSTRUCTION SUBMITTAL PROCEDURES.

1.2 SUBMITTAL DESCRIPTIONS (SD)

Submittal requirements are specified in Unified Facilities Guide Specifications (UFGS) in Part 2, GENERAL REQUIREMENTS; in references in Part 4 PERFORMANCE TECHNICAL SPECIFICATIONS; and in UFGSs in Part 5, PRESCRIPTIVE SPECIFICATIONS. Submittals that are identified by SD numbers use descriptions of items included in submittal packages and titles as follow:

SD-01 Preconstruction Submittals

Certificates of insurance
Surety bonds
List of proposed subcontractors
List of proposed products
Construction Progress Schedule
Submittal register
Schedule of values
Health and safety plan
Work plan
Quality control and Commissioning plans.
Environmental protection plan

SD-02 Shop Drawings

Drawings, diagrams and schedules specifically prepared to illustrate some portion of the work.

Diagrams and instructions from a manufacturer or fabricator for use in producing the product and as aids to the Contractor for integrating the product or system into the project.

Drawings prepared by or for the Contractor to show how multiple systems and interdisciplinary work will be coordinated.

SD-03 Product Data

Catalog cuts, illustrations, schedules, diagrams, performance charts, instructions and brochures illustrating size, physical appearance
and other characteristics of materials or equipment for some portion of the work.

Samples of warranty language when the contract requires extended product warranties.

SD-04 Samples

Physical examples of materials, equipment or workmanship that illustrate functional and aesthetic characteristics of a material or product and establish standards by which the work can be judged.

Color samples from the manufacturer's standard line (or custom color samples if specified) to be used in selecting or approving colors for the project.

Field samples and mock-ups constructed on the project site establish standards by which the ensuing work can be judged. Includes assemblies or portions of assemblies which are to be incorporated into the project and those which will be removed at conclusion
of the

work. SD-05

Design Data

Calculations, mix designs, analyses or other data pertaining to a part of work.

SD-06 Test Reports

Report signed by authorized official of testing laboratory that a material, product or system identical to the material, product or system to be provided has been tested in accord with specified requirements. (Testing must have been within three years of date of contract award for the project.)

Report which includes findings of a test required to be performed by the Contractor on an actual portion of the work or prototype prepared for the project before shipment to job site.

Report which includes finding of a test made at the job site or on sample taken from the job site, on portion of work during or after installation.

Investigation reports.

Daily checklists.

Final acceptance test and operational test procedure.

SD-07 Certificates

Statements signed by responsible officials of manufacturer of product, system or material attesting that product, system or material meets specification requirements. Must be dated after award of project contract and clearly name the project.

Document required of Contractor, or of a supplier, installer or subcontractor through Contractor, the purpose of which is to further quality of orderly progression of a portion of the work by documenting procedures, acceptability of methods or personnel qualifications.

Confined space entry

permits. SD-08 Manufacturer's

Instructions

Preprinted material describing installation of a product, system or material, including special notices and Material Safety Data sheets concerning impedances, hazards and safety precautions.

SD-09 Manufacturer's Field Reports

Documentation of the testing and verification actions taken by manufacturer's representative to confirm compliance with manufacturer's standards or instructions.

Factory test reports.

SD-10 Operation and Maintenance Data

Data that is furnished by the manufacturer, or the system provider, to the equipment operating and maintenance personnel. This data is needed by operating and maintenance personnel for the safe and efficient operation, maintenance and repair of the item.

SD-11 Closeout Submittals

Documentation to record compliance with technical or administrative requirements or to establish an administrative mechanism.

Special requirements necessary to properly close out a construction contract. For example, Record Drawings, As-built drawings, DD Form 1354, and Sustainable and Energy Data Record Card. Also, submittal requirements necessary to properly close out a major phase of construction on a multi-phase contract.

1.3 SUBMITTALS

The use of a "G" following a submittal indicates that an approval action is required, either by the Government or by the Contractor's Designer of Record (DOR) or QC Specialist.

Submit the following in accordance with the requirements of this section.

SD-01 Preconstruction

Submittals Submittal

Register Format; G

1.3.1 Submittal Register

The submittal register will be prepared during the initial design stages of the project and indicate each design and construction submittal.
Maintain an electronic version of the submittal register as work progresses. The DOR must assist the DQC in preparing the submittal register by determining all project submittals that require DOR approval. The Contractor proposed submittal register format must include all types of information pertinent to the submittal process and be approved by the Contracting Officer prior to the first submission.

1.4 CONSTRUCTION QUALITY CONTROL

1.4.1 Contractor Reviewing, Certifying, Approving Authority

The QC organization is responsible for reviewing and certifying that submittals are in compliance with the contract requirements.

In RFP PART 4 PERFORMANCE TECHNICAL SPECIFICATIONS (PTS), there are UFGS specification sections required to be submitted as part of the design submittal. Unless specified otherwise in this section, the Contractor's DOR is the approving authority for submittals listed in these UFGS specifications with a "G" designation, unless the DOR delegates to Contractor Quality Control approval. RFP Part 4 PTS sections also include submittals identified for DOR approval that are not denoted with a "G" designation, these submittals cannot be delegated for Contractor Quality Control approval.

If RFP PART 5 PRESCRIPTIVE SPECIFICATIONS are utilized in this RFP, the Contractor's DOR is the approving authority for submittals listed with a "G" designation, unless the DOR delegates to Contractor Quality Control approval.

DOR shall approve construction submittals that are incorporated in the design submittal prior to being submitted to the Government for design submittal approval. Indicate approval of these construction submittals on the accompanying submittal transmittal forms and the submittal register for each design submittal package. In addition, the DOR professional stamp on the final design submittal indicates approval of construction submittals combined with the design submittal.

Submittal items identified in RFP PARTS 2, 4, and 5 that are not identified with a "G" designation or not designated for DOR approval (in RFP Part 4) are for Contractor Quality Control approval.

Construction submittals that are approved by the DOR or certified by the QC are not required to be submitted to the Government for surveillance, except when the RFP requires the design and construction submittals to be combined in UFGS section 01 33 10.05 20, Design Submittal Procedures or where specified in paragraph SUBMITTALS RESERVED FOR GOVERNMENT SURVEILLANCE of this section.

1.4.2 Submittals Reserved for Government Surveillance

Surveillance submittals are approved by the Contractor in accordance with paragraph CONTRACTOR REVIEWING, CERTIFYING, AND APPROVING AUTHORITY, but
provide the Government the opportunity to oversee critical project issues.

If during the Government surveillance of construction submittals, items are brought to the Contractor's attention as non-compliant, the Contractor shall correct the submittal and construction to comply with the requirements of the RFP. Stamp surveillance submittals "APPROVED" by the DOR or QC Specialist and "FOR SURVEILLANCE ONLY." Submit the following Government surveillance submittals, prior to starting work for construction submittal items, and after the completion of the work for reports submittals items.

a. Submit fire protection related submittals pertaining to spray-applied fire proofing and fire stopping, exterior fire alarm reporting systems, interior fire alarm & detection systems, and fire suppression

systems including fire pumps and standpipe systems.

b. Submit geotechnical related submittals pertaining to the soils investigations (reports and soils analysis), foundations (shallow and deep), pavements structure design, test pile and production pile testing and installation.

c. Submit conveying related submittals pertaining to elevators, escalators, weight handling equipment, lifts, and conveyors.

d. Submit roofing submittals pertaining to materials and systems used to make up the roof system.

e. Submit HVAC Testing, Adjusting, and Balancing required submittals.

f. Submit telecommunications shop drawings, as described in Part 4, D50 ELECTRICAL, for coordination with the NMCI Contractor.

g. Submit Performance Verification and Acceptance Testing submittals listed in the PTS and referenced UFGS.

h. Submit all Interim Special Inspection Reports on a bi-weekly basis until work requiring special inspections is complete.

i. Submit all Structural Observation Reports and the Final Report of Special Inspections.

1.4.3 Submittals Reserved for Government Approval

The Government is the approving authority for submittals with a "G" designation in RFP Part 2 GENERAL REQUIREMENTS specification sections. Comply with additional Government approval requirements for Environmental submittals, as specified in RFP Part 2, Section 01 57 19.00 20 TEMPORARY
ENVIRONMENTAL CONTROLS FOR DESIGN-BUILD and 01 57 19.01 20,

SUPPLIMENTARY TEMPORARY ENVIRONMENTAL CONTROLS.

In addition to the Government approvals required by RFP Part 2, GENERAL REQUIREMENTS, the following submittals shall be certified by the QC Manager and the DOR, and approved by the Contracting Officer.

a. Transformers

b. Medium Voltage Switchgear

c. Medium Voltage Cable

d. Emergency Generators

e. Automatic Transfer Switches

f. Electronic Security Systems

1.4.3.1 Scheduling for Government Approved Submittals

Except as specified otherwise, allow review period, beginning when Government receives submittal from the QC organization, of 20 working days

for return of submittal to the Contractor. Period of review for submittals with Contracting Officer approval begins when Government receives submittal from QC organization. Period of review for each resubmittal is the same as for initial submittal.

1.4.4 Constraints

a. Submittals shall be complete for each definable feature of work; submit components of definable feature interrelated as a system at the same time.

b. Approval of a separate material, product, or component does not imply approval of assembly in which item functions.

1.4.5 Design Change and Variation

The Contractor must limit change and variation to items that will be advantageous to the Government. Submit proof that the change or variation is needed and provide the same or better level of quality as the design that the Government originally reviewed or approved. Design change is considered prior to Government approval of the final design and variation is considered after Government approval of final design.

1.4.5.1 Design Change

Design change must meet the minimum requirements of the solicitation and the accepted proposal. Change from what was reviewed by the Government during design must be approved by the Designer of Record and brought to the attention of the Government before the design change is incorporated into the design documents.

1.4.5.2 Variations

Variations from contract requirements including the solicitation, the

accepted proposal, and the final design, requires Government approval. Variations to the contract requirements must be approved by the Designer of Record prior to resubmitting the design to the Government for approval of the variation.

1.4.6 Contractor's Responsibilities

Ensure no work has begun until submittals for that work have been "approved" or "approved as noted."

1.4.7 QC Organization Responsibilities

Stamp each sheet of each submittal with QC certifying statement or approving statement, except that data submitted in bound volume or on one sheet printed on two sides may be stamped on the front of the first sheet only.

a. When approving authority is Contracting Officer, QC organization will certify submittals, assure proper signatures, and forward to Contracting Officer with the following certifying statement:

"I hereby certify that the (equipment) (material) (article) shown and marked in this submittal is that proposed to be incorporated with contract Number (insert contract number here), is in compliance with the contract documents, can be installed in the allocated spaces, and is submitted for Government approval.

RFP Part Two Submittals:
Certified by QC Manager_____, Date _____
(QC Manager)

RFP Part Four and Part Five

Submittals:

Certified by _____, Date _____
DOR

Certified by QC Manager_____, Date_____"

(1) Sign certifying statement or approval statement. The person signing certifying statements shall be QC organization member designated in the approved QC plan. The signatures shall be in original ink. Stamped signatures are not acceptable.

(2) Update submittal register database as submittal actions occur and maintain the submittal register at project site until final acceptance of all work by Contracting Officer.

(3) Retain a copy of approved submittals at project site, including Contractor's copy of approved samples.

b. When the Approving Authority is the Designer of Record, the DOR shall approve, professionally stamp, sign, and date submittals. DOR stamp on construction submittals or submission of design documents that include construction submittals indicates

DOR approval for construction. QC organization will certify submittals, assure proper signatures, and forward to Contracting Officer with the following certifying statement:

"I hereby certify that the (equipment) (material) (article) shown and marked in this submittal is that proposed to be incorporated with contract Number (insert contract number here), is in compliance with the contract requirements, can be installed in the allocated spaces, and is submitted for DOR approval.

RFP Part Four and Part Five Submittals:

Approved by _____, Date _____
DOR

Certified by QC Manager_____, Date_____"

(1) Sign certifying statement or approval statement. The person signing certifying statements shall be QC organization member designated in the approved QC plan. The signatures shall be in original ink. Stamped signatures are not acceptable.

(2) Update submittal register database as submittal actions occur and maintain the submittal register at project site until final acceptance of all work by Contracting Officer.

(3) Send copies of final DOR or QC Specialist approved and signed submittals that are identified in this section for Government surveillance to the Contracting Officer. Stamp copies "For Surveillance Only."

1.4.8 Government's Responsibilities

When approving authority is the Contracting Officer, the Government will:

a. Note date on which submittal was received from QC Manager, on each submittal.

b. Review submittals for compliance with contract documents.

1.4.8.1 Government Actions

Submittals will be returned with one of the following notations:

a. Submittals marked "approved" or "approved as submitted" authorize Contractor to proceed with work covered.

b. Asubmittal marked "not reviewed" will be returned with an explanation of the reason it was not reviewed.

c. Submittals marked "approved as noted" or "approval except as noted; resubmission not required" authorize Contractor to proceed with work as noted provided Contractor takes no exception to the notations.

d. Submittals marked "revise and resubmit" or "disapproved" indicate submittal is incomplete or does not comply with design concept or requirements of the contract documents and shall be resubmitted with appropriate changes. No work shall proceed for this item until resubmittal is approved.

e. Submittals required for surveillance will be returned only if corrective actions are required.

1.5 FORMAT OF SUBMITTALS

1.5.1 Transmittal Form

Transmit submittals with transmittal form prescribed by Contracting Officer and standard for the project.

1.5.1.1 Combined Design and Construction Submittal Notification

Indicate on the design submissions transmittal form, which construction submittals have been combined with the design documents. Coordinate transmittal form list of combined design and construction submittals with submittal register to indicate DOR approval of all combined submittals.

1.6 QUANTITY OF SUBMITTALS

1.6.1 Quantity of Submittals Reserved for Government Approval

Submit four copies of submittals of shop drawings requiring review and approval by Contracting Officer.

1.6.2 Quantity of Submittals Reserved for Government Surveillance

Submit electronic format submittals specified for surveillance to the Contracting Officer. Submit two additional hard copies of elevator submittals directly to the NAVFAC Elevator Specialist responsible for the NAVFAC elevator certification of the project.

PART 2 PRODUCTS

Not used.

PART 3 EXECUTION

Not used.

-- End of Section --

SECTION 01 33 10.05 20

DESIGN SUBMITTAL PROCEDURES
07/13

PART 1 GENERAL

1.1 SUMMARY

This section includes requirements for Contractor-originated design documents and design submittals.

1.2 REFERENCES

The publications listed below form a part of this specification to the extent referenced. The publications are referred to within the text by the basic designation only. The latest version of the publication at time of award shall be used.

U.S. DEPARTMENT OF DEFENSE (DOD) UNIFIED FACILITIES CRITERIA (UFC)

UFC 1-200-01	General Building Requirements
UFC 1-200-02	High Performance and Sustainable Building Requirements
UFC 1-300-08	Criteria for Transfer and Acceptance of DoD Real Property
UFC 1-300-09N	Design Procedures
UFC 3-600-10N	Fire Protection Engineering
UFC 3-800-10N	Environmental Engineering for Facility

Construction

1.2.1 Reference Requirements

1.2.1.1 UFC 1-200-01

UFC 1-200-01, General Building Requirements is a hub document that provides general building requirements and references other critical UFCs. A reference to UFC 1-200-01 in the RFP document requires compliance with the Tri-Service Core UFCs. Refer to the UFC 1-200-01 for a complete list of all applicable Tri-Service Core UFCs at website location http://www.wbdg.org/ccb/browse_cat.php?o=29&c=4.

1.2.1.2 UFC 1-200-02

UFC 1-200-01 requires compliance with UFC 1-200-02, High Performance and Sustainable Building Requirements. UFC 1-200-02 replace and cancel UFC
4-030-01, Sustainable Development and UFC 3-400-01, Energy Conservation.

1.2.1.3 UFC 3-600-10N and UFC 3-800-10N

UFC 3-600-10N and UFC 3-800-10N are only available on the NAVFAC Design-Build Website under the Design Guidance link. These Draft UFCs are applicable as Final documents for Navy projects.

1.3 GENERAL DESIGN REQUIREMENTS

Contractor-originated design documents shall provide a project design that complies with the Request For Proposal (RFP), UFC 1-300-09N, UFC 1-200-01, the Core UFCs, and other UFC's listed above.

1.4 SUBMITTALS

Submit design submittals, including shop drawings used as design drawings, to the Government for approval. The use of a "G" following a submittal indicates that a Government approval action is required. Submit the following in accordance with this section and Section 01 33 00.05 20 CONSTRUCTION SUBMITTAL PROCEDURES.

SD-01 Preconstruction

Submittals Consolidated RFP

Documents; G Submittal

Register; G

SD-04 Samples

Final framed rendering and copies;

G SD-05 Design Data

Design Drawings; G

Specifications; G

Design Analysis; G

Design Submittals;

G

Sustainable Design; G

Project Rendering; G

SD-07 Certificates

SD-11 Closeout Submittals

Record Documents; G

NAVFAC Sustainable and Energy Data Record Card; G

DD Form 1354; G

1.5 DESIGN QUALITY CONTROL

1.5.1 Contractor Reviewing and Certifying Authority

The QC organization is responsible for reviewing and certifying that design submittals are in compliance with the contract requirements.

1.5.2 Government Approving Authority

The Contracting Officer is the approving authority for design submittals.

1.5.3 Designer of Record Certifying Authority

The Designer of Record (DOR), as registered and defined in UFC 1-300-09N, is the design certifying authority. The DOR accepts responsibility for design of work in each respective design discipline, by stamping and approving final construction drawings submitted to the Government approval authority.

1.5.4 Contractor Construction Actions

Upon submission of sealed and signed design documents certified by the DOR, Design Quality Control (DQC) Manager and the Quality Control (QC) Managers, the Contractor may proceed with material and equipment purchases, fabrication and construction of any elements covered by that submittal, except as specified in the following paragraph.

1.5.4.1 Exception to Contractor Construction Actions

The Government will approve the following final submittals before the Contractor shall be allowed to proceed with construction:

a. Any design submittal that includes or will be impacted by a design change to the contract. Final Government approval of the design change is required before construction can begin on the work included in that

design submittal.

1.5.5 Contractor's Responsibilities

a. Designate a lead licensed architect or engineer to be in responsible charge to coordinate the design effort of the entire project. This lead architect or engineer shall coordinate all design segments of the project to assure consistency of design between design disciplines.

b. With the Designer or Record, verify site information provided in the RFP. In addition, provide additional field investigations and verification of existing site conditions as may be required to support the development of design and construction of the project.

c. Indicate on the transmittal form accompanying submittal which design submittals are being submitted as shop drawings.

d. Advise Contracting Officer of variations, as required by paragraph "Variations."

e. Provide an updated, cumulative submittal register with each design package that identifies the design and construction submittals required by that design package and previous submittals.

1.5.6 QC Organization Responsibilities

a. Both the CA and the QC Manager must certify design submittals for compliance with the contract documents. The DOR stamp on drawings indicates approval from the DOR.

b. QC organization shall certify submittals forwarded by the Designer of Record (DOR) to the Contracting Officer with the following certifying statement:

"I hereby certify that the (equipment) (material) (article) shown and marked in this submittal is that proposed to be incorporated with Contract Number (insert contract number here), is in compliance with the contract documents, and is submitted for Government approval.

Certified by Design Quality Control (DQC) Manager
_____, Date _

Certified by QC Manager_____, Date____"

c. Sign certifying statement. The persons signing certifying statements shall be the QC organization members designated in the approved QC plan. The signatures shall be in original ink. Stamped signatures are not acceptable.

d. Update submittal register as submittal actions occur and maintain the submittal register at project site until final approval of all work by Contracting Officer.

e. Retain a copy of approved submittals at project site.

1.5.7 Government Responsibilities The Government will

a. Note date on which submittal was received from QC manager, on each submittal.

b. Perform a quality assurance (QA) review of submittals. Government will notify Contractor when comments for that design package are posted and ready for Contractor evaluation and resolution.

c. Upon submittal of final design package and resolution of comments by the Contractor, the Government will sign final design package, when approved, and return electronic copy of signed design documents to the Contractor.

1.5.7.1 Actions Possible

Submittals will be returned with one of the following notations:

a. Submittals may be marked "approved."

b. Submittals marked "not reviewed" will indicate submittal has been previously reviewed and approved, is not required, does not have evidence of being reviewed and certified by Contractor, or is not complete. Submittal will be returned with an explanation of the reason it is not reviewed. Resubmit submittals returned for lack of review by Contractor or for being incomplete, with appropriate action, coordination, or change.

c. Submittals marked "revise and resubmit" or "disapproved" indicate submittal is incomplete or does not comply with design concept or requirements of the contract documents and shall be resubmitted with appropriate changes. If work has been started on the unacceptable portion of the design submittal, the Contractor shall propose corrective action. No further work shall proceed until the issue is resolved in a manner satisfactory to the Government.

1.6 DESIGN DOCUMENTS

Provide design documents that include design analysis, design drawings, and design specifications, reports, and submittal register in accordance with UFC 1-300-09N, Submittal Procedures.

Refer to 01 33 00.05 20, Construction Submittal Procedures for requirements pertaining to Contractor proposed design changes or variations.

1.7 DESIGN DRAWINGS

Prepare, organize, and present design drawings in accordance with the requirements of UFC 1-300-09N, Design Procedures.

Submit all CADD files for the final drawings on CD-ROM disks in AutoCAD 2007 format. Drawing files shall be full files, uncompressed and unzipped.

1.7.1 Design Drawings Used as Shop Drawings

Design drawings may be prepared more like shop drawings to minimize construction submittals after final design is approved. If the Contractor chooses or is required to include the construction submittal information on the design documents, indicate proprietary information on the design drawings as necessary to describe the products, materials, or systems that are to be used on the project. Construction submittal information included directly in the design drawings must be approved by the DOR. All design documents must be professionally signed in accordance with UFC 1-300-09N, Design Procedures.

1.7.2 Drawing Format For Design Drawings Used as Shop Drawings

The Contractor-originated drawings will be used as the basis for the record drawings. Shop drawings included as design documents shall comply with the same drawing requirements such as drawing form, sheet size, layering, lettering, and title block used in design drawings.

1.7.3 Identification of Design Drawings Used as Shop Drawings

The Contractor's transmittal letter and submittal register shall indicate which desgn drawings are being submitted as shop drawings.

1.7.4 Naval Facilities (NAVFAC) Engineering Command Drawing Numbers

Number the final Contractor-originated design drawings consecutively with NAVFAC drawing numbers. Determine the total number of sheets required for the complete set of drawings before requesting the NAVFAC drawing numbers from the Contracting Officer.

1.7.5 Seals and Signatures on Documents

All final Contractor-originated design drawings shall be signed, dated, and bear the seal of the registered architect or the registered engineer of the respective discipline in accordance with UFC 1-300-09N. This seal shall be the seal of the Designer of Record for that drawing, and who is professionally registered for work in that discipline. A principal or authorized licensed or certified employee shall electronically sign and date final drawings and cover sheet, in accordance with UFC 1-300-09N. The design drawing coversheets shall be sealed and signed by the lead licensed architect or engineer of the project design team. Indicate the Contractor's company name and address on the drawing coversheets of each design submittal. Application of the electronic seal and signature accepts responsibility for the work shown thereon.

1.7.6 Units of Measure

Utilize English Inch-Pound units of measure on the design documents

1.8 SPECIFICATIONS

Provide a Contractor-originated design specification that in conjunction with the drawings, demonstrates compliance with requirements of the RFP. The specified products, materials, systems, and equipment that are approved by the DOR; submitted to the Government by the Contractor; and reviewed by the Contracting Officer shall be used to construct the project. UFGS sections contained in RFP Part 2 shall become a part of the Contractor-originated Division 01 specification without

modification.
Specification Sections contained in RFP Part 5 shall become a part of the Contractor-originated specification without modification.

1.8.1 Specifications Components and Format

The Contractor shall prepare design specifications that include a UFGS specification for each product, material, or system on the project.

If the Contractor chooses or is required above to combine design and construction submittal information on the design documents, provide a UFGS specification and also proprietary information such as catalog cuts and manufacturers data that demonstrates compliance with the RFP. Organize the specifications using Construction Specification Institute (CSI) MasterformatTMunless the Contracting Officer requires a Uniformat organization. Navy's use of system specifications takes precedence over CSI Masterformat component breakdown and related component
specifications. Provide project specifications to include the following:

Provide the specification cover sheet with the professional seal and signature of the lead liscensed architect or engineer of the project design team. Indicate the Contractor's company name and address on the specification coversheet.

Table of contents for entire specification.

Individual UFGS specification sections for each product, material, and system required by the RFP. Edit UFGS sections in accordance with RFP Part 4, PTS Section Z-10, Design Submittals.

If proprietary information is provided or required, include a coversheets for the product, material, or system information that is being proprietarily specified. This information is to follow the related UFGS specification.

If proprietary information is provided or required, include highlighted and annotated Catalog Cuts, Manufacturer's Product Data, Tests, Certificates, Manufactures information and letters for each product, material, or system that is being proprietary specified.

Coordinated submittal register for all products, materials and systems with each design submittal. Provide a cumulative register that identifies the design and construction submittals required by each design package along with previous design submittals. The DOR shall assist in developing the submittal register by determining which submittal items are required to be approved by the DOR. Complete all fields in the final submittal register in order to obtain Government approval of the final design.

1.8.2 Specifications Section Source Priority

Choose UFGS sections that describe the products, materials, and systems that are used on the project. Use current UFGS sections that are available on the Whole Building Design Guide website and give priority to the Unified Tri-Service UFGS sections (no spec number suffix) and

UFGS that are prepared by NAVFAC (.00 20 suffix). Only use a UFGS section prepared by another DoD Component (.00 10, and .00 30 suffix), if an applicable NAVFAC prepared specification section does not exist. Do not use Army (.00 10 suffix) and NASA (.00 40 suffix) electrical and mechanical specifications. If no applicable UFGS technical specification exists to meet your project requirements, consult with the NAVFAC Component for guidance and create a new UFGS specification in accordance with UFC 1-300-02, Unified Facilities Guide Specifications (UFGS) Format Standard.

1.8.3 Fire Protection Specifications

Specifications pertaining to spray-applied fire proofing and fire stopping, exterior fire alarm reporting systems, interior fire alarm and detection systems, and fire suppression systems, including fire pumps and standpipe systems shall be either prepared by, or reviewed and approved by the Fire Protection DOR.

1.8.4 Identification of Manufacturer's Product Data Used as

Specifications. Provide complete and legible catalog cut sheets, product

data,
installation instructions, operation and maintenance instructions, warranty, and certifications for products and equipment for which final material and equipment choices have been made. Indicate, by prominent notation, each product that is being submitted including optional manufacturer's features, and indicate where the product data shows compliance with the RFP.

1.8.5 Specification Software

Submit the final specification source files in either MS Word or SpecsIntact.

1.9 DESIGN ANALYSIS

Prepare, organize, and present design analysis in accordance with the requirements of UFC 1-300-09N. The design analysis shall be a presentation of facts at the Concept Design Workshop to demonstrate the concept of the project is fully understood and the design is based on sound engineering principles. Provide design analyses for each discipline and include the following:

a. Basis of design that includes:

(1) An introductory description of the project concepts that addresses the salient points of the design;

(2) An orderly and comprehensive documentation of criteria and rationale for system selection; and

(3) The identification of any necessary licenses and permits that are anticipated to be required as a part of the design and/or construction process. The "Permits Record of Decision" (PROD) form provided shall be used for recording permits.

b. Code and criteria search shall identify all applicable codes and criteria and highlight specific requirements within these codes and criteria for critical issues in the facility design.

c. Calculations as specified and as needed to support this design.

d. Draft and Final NAVFAC Sustainable and Energy Data Record Card (NSEDRC) that documents the energy usage and sustainable features of the building. Refer to Record Documents paragraphs in this section for requirements.

e. Section titled "Antiterrorism" that documents the antiterrorism features

f. Fall Protection Analysis

g. Draft and Interim DD Form 1354 that document the real property assets of the project. Refer to Record Documents paragraphs in this section for requirements.

1.9.1 Basis of Design Format

The basis of design for each design discipline shall include a cover page indicating the project title and locations, contract number, table of contents, tabbed separations for quick reference, and bound in separate volumes for each design discipline.

1.9.2 Design Calculations

Place the signature and seal of the designer responsible for the work on the cover page of the calculations for the respective design discipline.

1.9.3 Sustainable Design

Provide Guiding Principle Validation documentation to support compliance with the Guiding Principle Requirements stated in RFP Part 3, Chapter 2 of this RFP.

Information and resources on sustainable design principles and guidelines are explained in the "Whole Building Design Guide" that can be found at www.wbdg.org.

1.9.3.1 Guiding Principle Validation

Provide a design that incorporates sustainable techniques and materials to the greatest extent possible and to meet as many points applicable to the project and monetarily feasible. Provide an analysis of the Guiding Principle Requirements identified in RFP Part 3, Chapter 2 as it applies to the design of this project and include updated information with each design submittal.

Guiding Principles Validation is met when each item on the approved High Performance and Sustainable Building (HPSB) Checklist is achieved, required Guiding Principle Requirements documentation is included in the Sustainability Notebook, and the Contracting Officer approves the required
sustainable documentation. HPSB Checklist is described in the UFC 1-200-

02 and for the Navy; this HPSB Checklist is the NAVFAC Sustainable Energy
Data Record Card (NSEDRC). Therefore when this specification refers to the HPSB Checklist, it is actually referring to the NAVFAC Sustainable Energy Data Record Card and will be referred to as HPSB/ NSEDRC Checklist throughout this specification

Provide the following information for the Basis of Design:

(1) A completed HPSB/ NSEDRC Checklist. Approval of this HPSB/NSEDRC Checklist will establish the sustainable goals for the project. Variation from that approved Checklist must be approved by the DOR and the Contracting Officer.

(2) Description of how each applicable Guiding Principle Requirement and other sustainable features and strategies will be achieved.

(3) Identify the Design Team's sustainability professional responsible for coordinating the sustainable requirements of the project.

b. For the submission specified, provide the following:

(1) A Preliminary HPSB/ NSEDRC Checklist at the Post Award Kick Off Meeting. Submit for approval by the Contracting officer.

(2) At sixty (60) days after Design Complete, submit a HPSB/ NSEDRC Checklist and Guiding Principle Requirement documentation, in the form of a three-ring binder, of all Guiding Principle Requirement to be achieved obtained.

(3) At sixty (60) days after BOD, submit a HPSB/ NSEDRC Checklist and the Guiding Principle Requirement documentation binder with any changes.
.

1.9.3.2 EPA Designated Products

Use products that meet or exceed the minimum requirements of this RFP and the EPA guideline standards for recovered content to the maximum practicable extent in the performance of the contract. See www.epa.gov/cpg/products.htm for a list of EPA designated products and a list of manufacturers and suppliers of EPA designated products.

1.9.4 Fall Protection Analysis

Eliminate fall hazards in the facility or if not feasible provide control measures to protect personnel conducting maintenance work after completion of the project. Identify fall hazards in the Basis of Design with the Design Development and Prefinal submittals. The analysis shall describe how fall hazards are considered, eliminated, prevented or controlled to prevent maintenance personnel from exposure to fall hazards while performing work at heights. Refer to RFP Part 2, UFGS Section 01 35 26.05 20, GOVERNMENT SAFETY REQUIREMENTS FOR DESIGN-BUILD for fall hazard protection requirements.

1.11 RECORD DOCUMENTS

1.11.1 Record Drawings

The as-built modifications shall be accomplished by electronic drafting methods on the Contractor-originated .DWG design drawings to create a complete set of record drawings. In addition to the requirements of FAC 5252.236-9310, RECORD DRAWINGS, survey the horizontal and vertical location of all provided underground utilities to within 30 mm(0.1 feet) relative to the station datum. All pipe utilities shall be surveyed at each fitting and every 30.5 m(100 LF) of run length. Electrical and communication ductbank, direct buried conduit, and direct buried conductor shall be surveyed every 30.5 m(100 LF) and at each change of direction. Record locations and elevations on the Record Drawings.

a. For each record drawing, provide CADD drawing identical to signed Contractor-originated.PDF drawings, that incorporates modifications to the as-built conditions. In addition, copy initials and dates from the Contracting Officer approved .PDF documents to the title block of the record CADD.DWG drawings. The RFP reference or definitive drawings are not required for inclusion in the record set of drawings.

b. After all as-built conditions are recorded on the CADD.DWG files, produce a PDF and .TIF file of each individual record drawing in conformance with UFC 1-300-09N. Electronic signatures are not required on record drawings.

c. Povide an searchable electronic copy of the photo documentation used in the QC Daily Reports. Refer to UFGS 01 45 00.05 20, Design and Construction Qualiy Control

1.11.2 Source Documents

Provide the specifications, design analysis, reports, surveys, calculations, and any other contracted documents on the CD-ROM disk with the record drawings.

1.11.3 NAVFAC Sustainable and Energy Data Record Card

Submit the NAVFAC Sustainable and Energy Data Record Card (NSEDRC) to document the energy usage and sustainable features of the facility. Follow the instructions provided and fill in the blank editable Adobe .PDF form available on the Whole Building Design Guide at the following web address: http://www.wbdg.org/references/pa_dod_sust_contract.php . Prepare the following submissions;

a. Draft submission. As a part of the Final Design submission the DOR shall complete the NSEDRC and include it as part of the Design Analysis and submit to the Contracting Officer for approval.

b. Final Submission. The Contractor and Designer of Record shall complete the electronic file documenting the NSEDRC with final data and provide the Final Submission 60 days prior to the Beneficial Occupancy Date (BOD) of the facility. The Final submission shall update the Draft submission information and submit to the

Contracting Officer for approval.

1.11.4 DD Form 1354

Prepare a Draft and Interim DD Form 1354, TRANSFER AND ACCEPTANCE OF MILITARY REAL PROPERTY, in accordance with UFC 1-300-08, available at http://www.wbdg.org/ccb/DOD/UFC/ufc_1_300_08.pdf. All assets must be broken out by construction categories that are found in the DD Form 1391 and the "Category Codes for Military Real Property" from NAVFAC P-72. Use Navy specific Facility Catcodes from the NAVFAC P-72, which are available from the Contracting Officer. Coordinate the identification of appropriate asset construction categories with the Contracting Officer and the Real Property Accounting Officer.

a. Draft DD Form 1354. DOR shall determine applicable real property assets broken out by construction categories and submit a "Draft DD Form 1354" for Government approval as a part of the Design Analysis included with the Prefinal Design submittal. "Draft DD Form 1354" must include all quantities and units of measure, but does not require cost breakdown. Download the current blank editable DD Form 1354 in ADOBE (PDF) from the following web site: http://www.dtic.mil/whs/directives/infomgt/forms/eforms/dd1354.pdf

b. Interim DD Form 1354. Contractor shall coordinate with the DOR and update the Draft DD Form 1354 submission to include any additional assets, improvements, or alterations that occurred during construction. Use the Draft DD Form 1354 and the UFGS Section 01 20 00.05 20, Price and Payment Procedures to identify costs. Submit Interim DD Form 1354 to the Government for approval 60 days prior to the Beneficial Occupancy Date (BOD). If modifications to the Interim DD Form 1354 are required by the Government, the corrected version must be submitted prior to the BOD.

Submit the completed Checklist for Form DD1354 of Government-Furnished and Contractor-Furnished/Contractor Installed items. Attach this list to the Interim DD Form 1354. Instructions for completing the form and a blank checklist may be obtained at the following web site: http://www.wbdg.org/ccb/DOD/UFC/ufc_1_300_08.pdf

Coordinate with Section 01 20 00.05 20, Price and Payment Procedures for construction categories and associated category codes. The Contractor's Schedule of Prices shall allocate the total cost of construction to the appropriate category codes.

When documenting demolition work, the DD Form 1354 shall list the quantitative data associated with this work as a negative value to show the cost should be deleted from the Navy asset data store. Coordinate with the Installation Real Property POC to assist in determining the negative value for demolition work.

PART 2 PRODUCTS

2.1 CONSOLIDATED RFP DOCUMENTS

Within four weeks after contract award, provide three electronic and hard copies of consolidated RFP documents incorporating the Contractor's Proposal and all RFP amendments and revisions that are

contained in the contract award. Identify the changes to the RFP with the "Red-lining" or "Track Changes" feature of SpecsIntact or MS Word to highlight the
pre-award modifications to the contract. Identify the amendment source at each addition and deletion by annotation, such as footnote or reference in parenthesis.

2.2 DESIGN SUBMITTALS

Complete the Contractor-originated design submittals as defined by this contract, and coordinate with the approved design network analysis schedule.

2.2.1 Design Submittal Packages

The Government prefers to review for Quality Assurance (QA) as few submittal packages as possible. Site and Building Design Submittal Packages are required, however Critical Path Design Submittals are acceptable if they are substantiated as having an impact to the critical path in the Government approved Network Analysis Schedule. A Critical Path submittal shall include all design analyses, drawings, specifications and product data required to fully describe the project element for Government review.

Examples of project elements that may be submitted as Critical Path Design Submittal Packages are: Master Plan Design, Demolition Design, Foundation Design, Structural Design, Building Enclosure Design, Remaining Work Design, Furniture/Equipment Design, long lead items, or any other construction activity or project element that can be organized into a submittal package that can be reviewed and approved by the Government without being contingent upon subsequent design submittals.

2.2.1.1 Site Design

The Site Design typically includes the following components:

a. Master Site Plan

b. Demolition

c. Site work including Environmental

d. Geotechnical

2.2.1.2 Building Design

The Building Design typically includes the following components:

a. Foundation

b. Structural

c. Building Enclosures

d. Remaining Work

e. Furniture/Equipment

2.2.2 Required Design Submittals

Provide the following Design Submittal packages. Provide comprehensive, multi-discipline design packages that include design documentation for project elements, fully developed to the design stage indicated, and in accordance with UFC 1-300-09N, except where specified otherwise.

a. Concept Design (15 percent to 35 percent) presented at Concept Design Workshop

b. Design Development (60 percent) - Government Progress QA. 21 calendar day Government review time.

c. Prefinal (100%) Design - Government Progress QA. 21 calendar day Government review time.

d. Final Design - Government QA. 14 calendar day Government review time.

2.2.3 Critical Path Design Submittals

Provide Critical Path Design Submittals that include design documents for the project elements involved. Include and provide full documentation that would normally have been provided in earlier submittal stages, such as Design Development Phase.

a. 100 percent (Prefinal) Design - Government Progress QA. 21 calendar day Government review time.

b. Final Design - Government QA. 21 calendar day Government review time for submittals requiring Government approval prior to construction.

2.2.4 Review Copies of Design Submittal Packages

a. Provide bound copies of each design submittal package for review to the following reviewers.

(1) Deliver (9) paper copies and (2) electronic copies to the NAVFAC MIDLANT IPT Project Manager at each submittal stage:

Code OPHRCI6, Hampton Roads IPT
Attn: David Yost, R.A.
9742 Maryland Avenue, Bldg Z-140, Room 227
Norfolk, Virginia 23511-3095

(2) Deliver (6) paper copies and (1) electronic copy at each submittal stage to:

Explosive Ordnance Group Two
ATTN: Facilities Manager, Mr. Gerald Erickson
2520 Midway Road, Bldg. 1618
Virginia Beach, VA 23459

(3) Deliver (3) paper copies and (1) electronic copy at each submittal stage to:

Naval Expeditionary Combat Command
Attn: Facilities Officer N43 31, Mr. Russell Carter
3575 Gator Blvd, Bldg 3504
Virginia Beach, VA 23459-3024

(4) Deliver (4) paper copies and (1) electronic copy for the Construction Manager, at each submittal stage to:

PWD Little Creek, Facilities Engineering & Acquisition Division JEBLC-FS, Attn. Steven Lantz
1450 Gator Blvd., Bldg . 3l65, Suite 150
Virginia Beach, VA 23521-3023

(5) Deliver (1) paper copy to the NCTAMS LANT (Outside Plant Communications plans/specs only) at each submittal stage.

NCTAMSLANT
Attn : N51 Larry Foster
9625 Moffett Ave.
Norfolk, VA 23511-2784

(6) Deliver (1) paper copy at each submittal stage to:

MIDLANT Environmental Branch (EV14) Water & Wasterwater Attn: Bryan Revell & Phillip Winslow
9742 Maryland Ave., BLDG N-26 , Room 3208
Norfolk Naval Station, Norfolk, VA 23 511

(7) Deliver (1) paper copy of elevator plans and specifications at each submittal to:

NAVFAC Atlantic Elevator Inspections
Attn: Dale Hughes
5606 Hampton Blvd, BLDG A
Norfolk, VA 23508

b. Provide the same quantities of copies for resubmittals, as required for each design submittal.

2.2.5 Design Submittal Review Schedule

Use the time frames for Government submittal review identified in the RFP. For construction scheduling purposes add additional time to the identified minimum review time periods to allow for the following scheduling conditions;

1. Submittals received after noon will be logged in on the following business day.

2. Federal holidays, including the period between Christmas and New Years Day, will be considered non-working days for Government personnel in reviewing design submittals and attending design related meetings.

3. Postpone delivery if Government personnel to receive the submittal are unavailable. Assure in advance of the submittal delivery it can be received.

4. Postpone delivery when heightened security restricts access to the Base. Coordinate heightened security requirements in advance with the CM.

5. Period of review for a resubmittal is the same as the initial submittal. Review time for resubmittals caused by non-conformance, do not result in a change in contract duration or cost.

2.2.6 Distribution of Approved Final Design Drawings and Specification to Government Representatives

Submit within 14 calendar days of receiving the Government Approved Final Design Documents, which includes any Critical Path Final Design Document Packages, electronic and hardcopy(s) of these final documents to Government representatives for use during the construction of the project. If Critical Path Submittal Packages are used, provide coversheets and index to identify each sheet and how this Critical Path Submittal Package fits into the overall project. Provide the number and type of copies of the final design documents to the following Government representative:

a. One electronic and one hard copy to the NAVFAC Project Manager at NAVFAC MIDLANT Hampton Roads IPT

b. Two electronic and five hard copies to the Design Manager

c. One electronic and one hard copy to the Construction Manager, PWD Little Creek, Facilities Engineering and Acquisition Division JEBLC-FS.

d. One electronic and one hard copy to the Contracting Officer

e. One electronic and three hard copies to Naval Expeditionary Combat Command, Facilities Officer N4331.

2.3 IDENTIFICATION OF DESIGN SUBMITTALS

Provide a title sheet to clearly identify each submittal, the completion status, and the date. The title sheet shall use the standard format indicated in the UFC 1-300-09N for title sheets. The title sheet shall be unique to a particular design submittal. Submit the project title sheet with design status and date for the design submittals.

2.3.1 Critical Path Submittal Title Sheet

Identify Critical Path submittals as such, and include a title sheet indicating the type of critical path submittal, the status, and the date.

2.3.2 Construction Document Validation

All CAD design documents used to construct the facility must bear a visible and legible AutoCAD generated plotstamp in the lower right hand margin of each drawing. The plotstamp information on the jobsite construction documents must match the plotstamp information contained on the following development stages of the design documents:

a. The Final Critical Path Submittal or the Final Design Submittal

professionally signed by the DOR and submitted for Government approval.

b. The Final Critical Path Submittal or the Final Design Submittal drawings that have approved by the Government. This development stage may be combined with "c." below, if issued at the same time.

c. The Final Critical Path or Final Design drawings that have been included in the contract by modification.

d. The Final Critical Path or Final Design drawings which include subsequent revisions to the design documents that have been included in the contract by modifications.

Issue new drawings for construction which bear the current plotstamp once a new development stage of the design documents has been accomplished.
Design documents which do not bear a plotstamp that matches the corresponding plotstamp exhibited on the design documents described above, shall not be used for the construction of the project. The plotstamp must bear the date and time of the plot, at a minimum. Maintain a plotstamp record at the jobsite that lists the applicable plotstamp information for each drawing through each stage of development described above.

PART 3 EXECUTION

3.1 CONTRACTOR'S RESOLUTION OF COMMENTS

Provide written responses to all written comments by the Government. Resubmittal of an unacceptable design submittal shall be a complete package that includes all the required, specified components of that design submittal. When required by the Government, Contractor resubmittal of design package, due to nonconformance to the contract, is not a delay in the contract.

3.2 DESIGN CHANGE AND VARIATIONS

A design change is when the design is revised from what was reviewed by the Government during any phase of the design process prior to Government approval of the Final Design. A variation is any portion of the design that differs from the requirements of the solicitation, accepted proposal, or final design after Government approval of the Final Design. Design changes and variations require Government approval and only variations that are advantageous to the Government will be considered. Refer to UFGS 01 33 00.05 20, Construction Submittal Procedures for further explanation and requirements of design change and variation.

The Contractor shall immediately notify the Government of all potential design changes and variations via a Request for Information (RFI) to the Contracting Officer. Design changes or variations that the Contractor asserts will require a contract modification to adjust the cost/price or schedule shall not be incorporated in the design during any phase of the design process without prior documented approval from the Contracting Officer. Contractors will not receive compensation for any unauthorized design changes or variations which have been included in the Government approved Final Design. Include

the following information in the design change and variation RFIs:

a. Indicate the RFP Parts, sections, and paragraphs affected by this design change or variation,

b. The scope of work of the design change or variation,

c. The reason for the proposed change,

d. Explanations of how the variation is advantageous to the Government.

d. Indicate which upcoming design submittal will be affected by the subject design change,

e. Explanation of contract cost/price and schedule impacts or provide an affirmative statement indicating that the design change or variation will not have an impact on the contract cost/price or schedule.

f. Coordination measures proposed to incorporate the design change or variation into the construction

g. Upon request by the Contracting Officer, submit a cost proposal prepared using the Uniformat Work Breakdown Structure for all design changes and variations that have cost or schedule impacts. Submit a proposal that provides cost breakdown of each Uniformat system or subsystem that is applicable to the design change or variation. Utilize the units of measure indicated in the Uniformat Structure at the NAVFAC DB RFP webpage, http://www.wbdg.org/ndbm/uniformat.php .

3.3 THE CONTRACT AND ORDER OF PRECEDENCE

3.3.1 Contract Components

The contract consists of the solicitation, the approved proposal, and the final design.

3.3.2 Order of Precedence

NFAS Clause 5252.236-9312. In the event of conflict or inconsistency between any of the below described portions of the conformed contract, precedence shall be given in the following order:

a. Any portions of the proposal or final design that exceed the requirements of the solicitation.

(1) Any portion of the proposal that exceeds the final design.

(2) Any portion of the final design that exceeds the proposal.

(3) Where portions within either the proposal or the final design conflict, the portion that most exceeds the requirements of the solicitation has precedence.

b. The requirements of the solicitation, in descending order of precedence:

(1) Standard Form 1442, Price Schedule, and Davis Bacon Wage Rates.

(2) Part 1 - Contract Clauses.

(3) Part 2 - General Requirements.

(4) Part 3 - Project Program Requirements.

(5) Part 6 - Attachments (excluding Concept Drawings).

(6) Part 5 - Prescriptive Specifications exclusive of performance specifications.

(7) Part 4 - Performance Specifications exclusive of prescriptive specifications.

(8) Part 6 - Attachments (Concept Drawings).

3.3.2.1 Government Review or Approval

Government review or approval of any portion of the proposal or final design shall not relieve the Contractor from responsibility for errors or omissions with respect thereto.

-- End of Section --

SUBMITTAL REGISTER

CONTRACT NO.

TITLE AND LOCATION

Part A - P-354 EOD Consolidated OPS and Logistics Facilities

CONTRACTOR

ACTIVITY NO	TRANSMITTAL NO	SPEC SECT	DESCRIPTION ITEM SUBMITTED	PARAG# RAPH	CLASSIFICATION	GOVT OR A/E REVWR	CONTRACTOR: SCHEDULE DATES			CONTRACTOR ACTION			APPROVING AUTHORITY					
							SUBMIT	APPROVAL NEEDED BY	MATERIAL NEEDED BY	ACTION CODE	DATE OF ACTION	DATE FWD TO APPR AUTH/ DATE RCD FROM CONTR	DATE FWD TO OTHER REVIEWER	DATE RCD FROM OTH REVIEWER	ACTION CODE	DATE OF ACTION	MAILED TO CONTR/ DATE RCD FRM APPR AUTH	REMARKS
(a)	(b)	(c)	(d)	(e)	(f)		(g)	(h)	(i)	(j)	(k)	(l)	(m)	(n)	(o)	(p)	(q)	(r)
		01 14 00.05 20	SD-01 Preconstruction Submittals															
			List of contact personnel	1.3.1.1	G													
		01 20 00.05 20	SD-01 Preconstruction Submittals															
			Schedule of Prices	1.3														
		01 30 00.05 20	SD-01 Preconstruction Submittals															
			Insurance	1.2														
		01 31 19.05 20	SD-01 Preconstruction Submittals															
			Design Submittal Packaging	1.3.2	G													
			Project Schedule	1.3.7	G													
			Performance Assessment Plan	1.3.6	G													
			(PAP)															
			CDW Facilitator Experience	1.3.8.1	G													
			Resume															
			CDW Preliminary Concept	1.3.8.2	G													
			Design															
			CDW Cost Estimate	1.3.8.2	G													
			Concept Design Workshop	1.3.8.3	G													
			Report															
		01 32 16.05 20	SD-01 Preconstruction Submittals															
			Design and Construction	1.2	G													
			Schedule															
		01 32 17.05 20	SD-01 Preconstruction Submittals															
			Qualifications	1.5	G													
			Design Baseline Network	1.3	G													
			Analysis Schedule															

SUBMITTAL REGISTER

CONTRACT NO.

TITLE AND LOCATION

Part A - P-354 EOD Consolidated OPS and Logistics Facilities

CONTRACTOR

ACTIVITY NO	TRANSMITTAL NO	SPEC SECT	DESCRIPTION ITEM SUBMITTED	PARAG # RAPH	CLASSIFICATION	GOVT OR A/E REVWR	CONTRACTOR: SCHEDULE DATES			CONTRACTOR ACTION			APPROVING AUTHORITY					
							SUBMIT	APPROVAL NEEDED BY	MATERIAL NEEDED BY	ACTION CODE	DATE OF ACTION	DATE FWD TO APPR AUTH/ DATE RCD FROM CONTR	DATE FWD TO OTHER REVIEWER	DATE RCD FROM OTH REVIEWER	ACTION CODE	DATE OF ACTION	MAILED TO CONTR/ DATE RCD FRM APPR AUTH	REMARKS
(a)	(b)	(c)	(d)	(e)	(f)		(g)	(h)	(i)	(j)	(k)	(l)	(m)	(n)	(o)	(p)	(q)	(r)
		01 32 17.05 20	Construction Baseline Network	1.3	G													
			Analysis Schedule															
			SD-07 Certificates															
			Monthly Network Analysis	1.7.1	G													
			Schedule Updates															
			SD-11 Closeout Submittals															
			As-Built Schedule	1.7.2	G													
		01 33 00.05 20	SD-01 Preconstruction Submittals															
			Submittal Register	1.3.1	G													
		01 33 10.05 20	SD-01 Preconstruction Submittals															
			Consolidated RFP Documents	2.1	G													
			Submittal Register	1.5.5	G													
			SD-04 Samples															
			rendering	1.10.3	G													
			SD-05 Design Data															
			Design Drawings	1.7	G													
			Specifications	1.8	G													
			Design Analysis	1.9	G													
			Design Submittals	2.2	G													
			Sustainable Design	1.9.3	G													
			Project Rendering	1.10	G													

SUBMITTAL REGISTER

CONTRACT NO.

TITLE AND LOCATION
Part A - P-354 EOD Consolidated OPS and Logistics Facilities

CONTRACTOR

ACTIVITY NO	TRANSMITTAL NO	SPEC SECT	DESCRIPTION ITEM SUBMITTED	PARAG# RAPH	CLASSIFICATION	GOVT OR A/E REVWR	CONTRACTOR: SCHEDULE DATES			CONTRACTOR ACTION			APPROVING AUTHORITY				MAILED TO CONTR/ DATE RCD FRM APPR AUTH	REMARKS
							SUBMIT	APPROVAL NEEDED BY	MATERIAL NEEDED BY	ACTION CODE	DATE OF ACTION	DATE FWD TO APPR AUTH/ DATE RCD FROM CONTR	DATE FWD TO OTHER REVIEWER	DATE RCD FROM OTH REVIEWER	ACTION CODE	DATE OF ACTION		
(a)	(b)	(c)	(d)	(e)	(f)		(g)	(h)	(i)	(j)	(k)	(l)	(m)	(n)	(o)	(p)	(q)	(r)
		01 33 10.05 20	SD-11 Closeout Submittals															
			Record Documents	1.11	G													
			NAVFAC Sustainable and Energy	1.11.3	G													
			Data Record Card															
			DD Form 1354	1.11.4	G													
		01 33 29.00 20	SD-01 Preconstruction Submittals															
			Preliminary Sustainability	1.4.1.1	G													
			Notebook Submittal															
			Preliminary High Performance	1.4.2.1														
			and Sustainable Building Checklist															
			SD-07 Certificates															
			Third Party Certification (TPC)	1.3.4														
			SD-11 Closeout Submittals															
			Final Sustainability Notebook	1.4.1.1	G													
			Submittal															
			Final High Performance and	1.4.2.1	G													
			Sustainable Building															
			(HPSB/NSEDRC) Checklist															
			Amended Final Sustainability	1.4.1.1	G													
			Notebook Submittal															
			Third Party Certification Plaque	3.2.1	G													
			and Certificates															
		01 35 26.05 20	SD-01 Preconstruction Submittals															
			Accident Prevention Plan -	1.6.3.1	G													
			Pre-Design Submittal															

SUBMITTAL REGISTER

CONTRACT NO.

TITLE AND LOCATION
Part A - P-354 EOD Consolidated OPS and Logistics Facilities

CONTRACTOR

ACTIVITY NO	TRANSMITTAL NO	SPEC SECT	DESCRIPTION ITEM SUBMITTED	PARAG # RAPH	CLASSIFICATION	GOVT OR A/E REVWR	CONTRACTOR: SCHEDULE DATES			CONTRACTOR ACTION			APPROVING AUTHORITY					
							SUBMIT	APPROVAL NEEDED BY	MATERIAL NEEDED BY	ACTION CODE	DATE OF ACTION	DATE FWD TO APPR AUTH/ DATE RCD FROM CONTR	DATE FWD TO OTHER REVIEWER	DATE RCD FROM OTH REVIEWER	ACTION CODE	DATE OF ACTION	MAILED TO CONTR/ DATE RCD FRM APPR AUTH	REMARKS
(a)	(b)	(c)	(d)	(e)	(f)		(g)	(h)	(i)	(j)	(k)	(l)	(m)	(n)	(o)	(p)	(q)	(r)
		01 35 26.05 20	Accident Prevention Plan -	1.6.3.2	G													
			Pre-Construction Submittal															
			Activity Hazard Analysis (AHA)	1.6.3.3	G													
			Crane Critical Lift Plan	1.6.3.2	G													
			Qualifications	1.6.3.2	G													
			SD-06 Test Reports															
			Accident Notifications	1.7.1														
			Accident Reports	1.7.2														
			Crane Reports	1.7.3														
			Monthly Exposure Report	1.4														
			SD-07 Certificates															
			Confined Space Entry Permit	1.6.2.1														
			Hot Work Permit	1.6.2.1														
			License Certificates	1.9														
			License Certificates	1.9														
			Contractor Safety Self-Evaluation	1.4	G													
			Checklist															
			Certificate of Compliance	1.6.3.2														
		01 45 00.05 20	SD-01 Preconstruction Submittals															
			Design Quality Control (DQC)	1.3.3	G													
			Plan															
			Construction Quality Control	1.3.3	G													
			(CQC) Plan															
			Commissioning Plan	1.3.4	G													
			SD-05 Design Data															

SUBMITTAL REGISTER

CONTRACT NO.

TITLE AND LOCATION

Part A - P-354 EOD Consolidated OPS and Logistics Facilities

CONTRACTOR

ACTIVITY NO	TRANSMITTAL NO	SPEC SECT	DESCRIPTION ITEM SUBMITTED	PARAG # RAPH	CLASSIFICATION	GOVT OR A/E REVWR	CONTRACTOR: SCHEDULE DATES			CONTRACTOR ACTION			APPROVING AUTHORITY					
							SUBMIT	APPROVAL NEEDED BY	MATERIAL NEEDED BY	ACTION CODE	DATE OF ACTION	DATE FWD TO APPR AUTH/ DATE RCD FROM CONTR	DATE FWD TO OTHER REVIEWER	DATE RCD FROM OTH REVIEWER	ACTION CODE	DATE OF ACTION	MAILED TO CONTR/ DATE RCD FRM APPR AUTH	REMARKS
(a)	(b)	(c)	(d)	(e)	(f)		(g)	(h)	(i)	(j)	(k)	(l)	(m)	(n)	(o)	(p)	(q)	(r)
		01 45 00.05 20	Design Quality Control	1.4.2	G													
			Documentation															
			SD-07 Certificates															
			Preliminary Inspections and Final	1.4.4.1	G													
			Acceptance Testing															
			Final Life Safety/Fire Protection	1.4.4.1	G													
			Certification															
			IBC Special Inspections	1.4.4.2	G													
			Certification															
			SD-11 Closeout Submittals															
			Summary Commissioning Report	1.3.5	G													
		01 50 00.05 20	SD-01 Preconstruction Submittals															
			Traffic control plan	1.7.1.1	G													
			Construction site plan	1.4	G													
			SD-03 Product Data															
			Backflow preventers	2.1														
			SD-06 Test Reports															
			Backflow Preventer Tests	3.3	G													
			Backflow Preventers Certificate	1.5														
		01 57 19.00 20	SD-01 Preconstruction Submittals															
			Preconstruction Survey	1.5.1	G													
			Solid Waste Management Plan	3.3	G													
			and Permit															
			Regulatory Notifications	1.5.2	G													
			Environmental Protection Plan	1.6	G													

SUBMITTAL REGISTER

CONTRACT NO.

TITLE AND LOCATION
Part A - P-354 EOD Consolidated OPS and Logistics Facilities

CONTRACTOR

ACTIVITY NO	TRANSMITTAL NO	SPEC SECT	DESCRIPTION ITEM SUBMITTED	PARAG # RAPH	CLASSIFICATION	GOVT OR A/E REVWR	CONTRACTOR: SCHEDULE DATES			CONTRACTOR ACTION			APPROVING AUTHORITY					
							SUBMIT	APPROVAL NEEDED BY	MATERIAL NEEDED BY	ACTION CODE	DATE OF ACTION	DATE FWD TO APPR AUTH/ DATE RCD FROM CONTR	DATE FWD TO OTHER REVIEWER	DATE RCD FROM OTH REVIEWER	ACTION CODE	DATE OF ACTION	MAILED TO CONTR/ DATE RCD FRM APPR AUTH	REMARKS
(a)	(b)	(c)	(d)	(e)	(f)		(g)	(h)	(i)	(j)	(k)	(l)	(m)	(n)	(o)	(p)	(q)	(r)
		01 57 19.00 20	Storm Water Pollution Prevention	3.1.2.1	G													
			Plan															
			Storm Water Notice of Intent (for	3.1.2.1	G													
			NPDES coverage under the															
			general permit for construction															
			activities)															
			Dirt and Dust Control Plan	3.13.1														
			SD-06 Test Reports															
			Laboratory Analysis	3.4														
			Disposal Requirements	3.14.2														
			Erosion and Sediment Control	3.1.2														
			Inspection Reports															
			Storm Water Inspection Reports	3.1.2														
			for General Permit															
			Solid Waste Management Report	3.3.1	G													
			SD-07 Certificates															
			Contractor 40 CFR employee	1.5.4	G													
			training records															
			ECATTS certificate of completion	1.4.1														
			SD-11 Closeout Submittals															
			Storm Water Pollution Prevention	3.1.2.2	G													
			Plan compliance notebook															
			Waste Determination	3.4														
			Documentation															
			Contractor 40 CFR Employee	1.5.4														
			Training Records															

SUBMITTAL REGISTER

CONTRACT NO.

TITLE AND LOCATION

Part A - P-354 EOD Consolidated OPS and Logistics Facilities

CONTRACTOR

ACTIVITY NO	TRANSMITTAL NO	SPEC SECT	DESCRIPTION ITEM SUBMITTED	PARAG # RAPH	CLASSIFICATION	GOVT OR A/E REVWR	CONTRACTOR: SCHEDULE DATES			CONTRACTOR ACTION			APPROVING AUTHORITY					
							SUBMIT	APPROVAL NEEDED BY	MATERIAL NEEDED BY	ACTION CODE	DATE OF ACTION	DATE FWD TO APPR AUTH/ DATE RCD FROM CONTR	DATE FWD TO OTHER REVIEWER	DATE RCD FROM OTH REVIEWER	ACTION CODE	DATE OF ACTION	MAILED TO CONTR/ DATE RCD FRM APPR AUTH	REMARKS
(a)	(b)	(c)	(d)	(e)	(f)		(g)	(h)	(i)	(j)	(k)	(l)	(m)	(n)	(o)	(p)	(q)	(r)
		01 57 19.00 20	Solid Waste Management Permit	3.3														
			Solid Waste Management Report	3.3.1														
			Hazardous Waste/Debris	3.12.2														
			Management															
			Regulatory Notifications	1.5.2														
		01 78 24.00 20	SD-10 Operation and Maintenance															
			Data															
			Training Plan	3.1.1	G													
			Training Outline	3.1.3	G													
			Training Content	3.1.2	G													
			SD-11 Closeout Submittals															
			eOMSI, Preliminary Submittal	1.3.1	G													
			eOMSI, Prefinal Submittal	1.3.2	G													
			eOMSI, Final Submittal	1.3.3	G													
			Training Video Recording	3.1.4	G													
			Validation of Training Completion	3.1.6	G													

SECTION 01 33 29.00 20

SUSTAINABLE

REQUIREMENTS
08/13

PART 1 GENERAL

1.1 REFERENCES

The publications listed below form a part of this specification to the extent referenced. The publications are referred to within the text by the basic designation only.

U.S. DEPARTMENT OF ENERGY (DOE)

ISWG Guiding Principles	(2008) High Performance and Sustainable Buildings Guidance

1.2 SUBMITTALS

Government approval is required for submittals with a "G" designation; submittals not having a "G" designation are for information only. When used, a designation following the "G" designation identifies the office that will review the submittal for the Government. The following shall be submitted in accordance with Section 01 33 10.05 20 DESIGN SUBMITTAL PROCEDURES and Section 01 33 00.05 20 CONSTRUCTION SUBMITTAL PROCEDURES:

SD-01 Preconstruction Submittals

Preliminary Sustainability Notebook Submittal; G

Preliminary High Performance and Sustainable Building

Checklist SD-07 Certificates

Third Party Certification

(TPC) SD-11 Closeout Submittals

Final Sustainability Notebook Submittal; G

Final High Performance and Sustainable Building (HPSB/NSEDRC) Checklist; G

Amended Final Sustainability Notebook Submittal; G

Third Party Certification Plaque and Certificates;

G

1.3 GUIDING PRINCIPLES VALIDATION (GPV)

Provide construction related sustainable documentation to verify achievement of ISWG Guiding Principles Validation (GPV) and completion of High Performance Sustainable Building (HPSB) Checklist. (This is the same checklist called NAVFAC Sustainable Energy Data Record Card (NSEDRC) items in Attachment 1).

Provide the following for GPV:

a. A completed HPSB/NSEDRC Checklist, using the HPSB/NSEDRC Checklist at Attachment 1. Further definitions and requirements are provided in paragraph HPSB/NSEDRC CHECKLIST.

b. Government approval of any changes to the HPSB/NSEDRC Checklist from the Contracting Officer at the Preconstruction Conference. Contracting Officer's approval establishes identified ISWG Guiding Principles Requirements as the project's sustainability goals.

   No variations or substitutions to the sustainability requirements are allowed without written consent from the Contracting Officer. Immediately bring to the attention of the Contracting Officer any changes that impact meeting the approved ISWG Guiding Principles Requirements for this project and demonstrate that change will not incur additional construction cost or increase the life cycle cost.

c. Completion of all work required to incorporate the applicable ISWG Guiding Principles Requirements indicated on the HPSB/NSEDRC Checklist and in this contract.

d. Provision of construction related documentation to the Contracting Officer who will provide to the Designer of Record (DOR) to maintain an up-to-date Sustainability Notebook. Supplement construction related documentation containing the following components;

   (1) HPSB/NSEDRC Checklist

   (2) Sustainability Action Plan

   (3) Documentation illustrating Guiding Principle Requirements compliance

   (4) Commissioning Plan and Reports

1.3.1 Sustainability Action Plan

Include the following information in the Sustainability Action Plan:

a. Contractor confirmation to achieve each construction relate GP requirement.

b. For each designated construction related ISWG Guiding Principles Requirements that is not achieved, provide

narrative explaining how mission, activity, or lack of funded scope for mandatory requirements precludes achieving specific sustainability requirement or goal. Provide analysis of particular requirement

and level to which project is able to comply.

c. Name and contact information for: Contractor's Sustainable POC and other sustainability professional on the Contractor's Staff responsible for ensuring sustainability goals are accomplished and documentation is assembled.

1.3.2 Responsibilities

Contractor is responsible for all costs associated with constructing and demonstrating that project complies with approved ISWG Guiding Principles Requirements.

1.3.3 Calculations

Provide calculations, product data, and certifications required in this section to demonstrate compliance with the ISWG Guiding Principles Requirements.

1.4 SUSTAINABLITY SUBMITTALS REQUIREMENTS

Provide documentation in the Sustainability Notebook and the HPSB/NSEDRC Checklist to indicate compliance with the sustainability requirements of the project.

1.4.1 SUSTAINABILITY NOTEBOOK

Provide and maintain a comprehensive Sustainability Notebook to document compliance with the sustainability requirements identified in the approved HPSB/NSEDRC and TPC Checklists.Sustainability Notebook must contain all required data to support full compliance with the ISWG Guiding Principles Requirements and TPC requirements. Sustainability Notebook is in the form of an Adobe PDF file; bookmarked at each ISWG Guiding Principles Requirement, TPC requirement,and sub-bookmarked at each document. Match format to ISWG Guiding Principles numbering system indicated herein. Maintain up to date information, spreadsheets, templates, etc. with each current submittals. For TPC projects, provide a second Table of contents using TPC numbering system. Locate documentation unique to TPC here. Where TPC documentation would repeat GP documentation, insert note referring reviewer to GP documentation.

Contracting Officer may deduct from the monthly progress payment accordingly if Sustainability Notebook information is not current, until information is updated and on track per project goals.

1.4.1.1 Sustainability Notebook Submittal Schedule

Provide Sustainability Notebook Submittals at the following milestones of the project:

a. Preliminary Sustainability Notebook Submittal
Submit preliminary Sustainability Notebook for approval at the Pre-construction conference.

b. Construction Progress Meetings. Update GP and TPC documentation in the Sustainability Notebook and TPC Online tool for each meeting.

c. Final Sustainability Notebook Submittal

Submit updated Sustainability Notebook within 60 days after the Beneficial Occupancy Date (BOD). Final progress payment retainage may be held by Contracting Officer until Final Sustainable construction phase documentation is complete. Submit three (3) electronic copies of the Final Sustainability Notebook on DVDs to the Government.

d. Amended Final Sustainability Notebook Submittal

Amend and resubmit the Final Sustainability Notebook to include commissioning, testing and balancing, and collection of performance requirements. Submit three (3) final electronic copies of the Amended Final Sustainability Notebook Submittal on DVDs to the Government no longer than 30 days after the GP, TPC, and Cx designated data collection period.

1.4.2 HIGH PERFORMANCE SUSTAINABLE BUILDING (HPSB/NSEDRC) CHECKLIST

Provide construction documentation that provides proof of and supports compliance with the completed HBSP/NSEDRC Checklist.

1.4.2.1 HPSB/NSEDRC Checklist Submittal Schedule

Submit an updated copy of the HPSB/NSEDRC Checklist in the Sustainability Notebook.

a. Preliminary High Performance and Sustainable Building Checklist (HPSB/NSEDRC) at the Pre-construction meeting.

b. Final High Performance and Sustainable Building (HPSB/NSEDRC) Checklist not less than 60 days after BOD.

The Checklist form is found at the following link;
http://www.wbdg.org/pdfs/navfac_sustainable_energy_data_record_card.pdf

1.5 DOCUMENTATION REQUIREMENTS

Incorporate each of the following ISWG Guiding Principles Requirements into project construction; and provide documentation that proves compliance with each listed requirement. Items below are organized according to the ISWG Guiding Principles. Note that the ISWG Guiding Principles use Roman numerals to denote categories of requirements. The below list adds additional enumeration to further break down the ISWG Guiding Principles into the ISWG Guiding Principles Requirements.

1.5.1 Commissioning

GP Denotation - I.b.;

Work with the Government's CxA to achieve requirements of the

Commissioning (Cx) plan and other construction document requirements at each stage of commissioning. Maintain up-to-date records of commissioning activities in the Sustainable Notebook.

1.5.2 Energy Efficient

Equipment GP Denotation -

II.a.2.

Provide only energy-using equipment that is Energy Star rated, or has the Federal Energy Management Program (FEMP) recommended efficiency. Where Energy Star or FEMP recommendations have not been established, provide equipment with efficiency in the top 25 percent for the type of equipment procured. Provide only energy using equipment that meets FEMP requirements for low standby power consumption. Energy efficient equipment can be found at: http://www1.eere.energy.gov/femp/ and http://www.energystar.gov/.

Provide the following documentation:

Proof that equipment is energy efficient and complies with the cited requirements.

1.5.3 Benchmarking

GP Denotation - II.e.1.

Provide report of baseline data with the energy design

targets. Provide the following documentation:

Prefinal Performance Report with data collected from the first 60 days of operation of the facility after Beneficial Occupancy Date (BOD). Submit this information with the Final Sustainability Notebook Submittal.

1.5.4 Reduce Volatile Organic Compounds (VOC)

GP Denotation - IV.d.

Provide materials and products with ingredients, components and emissions that meet the volatile organic compound levels cited in UFC 1-200-02, "High Performance and Sustainable Building Requirements". Products include adhesives, sealants, paints, coatings, carpet and flooring systems, wood panel products, furnishings, walls, and ceilings.

Provide the following documentation:

a. Documentation showing that materials do not exceed maximum VOC emissions of cited standards. Use VOC averaging to assure maximum paint and coating performance on painted items that are subject to human contact or harsh environmental conditions.

b. Documentation showing that flooring materials comply with VOC emissions of cited standards.

c. Documentation showing that composite wood and agrifiber products and associated laminating adhesives contain no added urea-formaldehyde.

d. Documentation showing that furniture and seating is third-party certified.

e. Documentation showing that all gypsum board, insulation, acoustical ceiling systems and wall coverings installed in building interior meet cited standards.

1.5.5 Indoor Air Quality During Construction

GP Denotation - IV.e.

Prior to construction, create indoor air quality plan. Implement IAQ plan during construction and flush building air before occupancy.

Provide the following documentation:

IAQ management plan for the construction and preoccupancy phases of the building that has been developed and implemented in accordance with Sheet Metal and Air Conditioning Contractor's National Association (SMACNA) Indoor Air Quality Guidelines for Occupied Buildings Under Construction 2007.

Provide required documentation showing that after construction ends and prior to occupancy, new HVAC filters were installed, and building air was flushed out a minimum of 72-hours with maximum outdoor air consistent with achieving relative humidity no greater than 60 percent, and indoor air temperature maintained at minimum 60 degrees Fahrenheit.

1.5.6 Recycled Content

Denotation - Va;

Provide materials on this project with aggregated total recycled content greater than 10 percent

Provide the following documentation:

a. Documentation showing total amount of recycled content contained in building materials as a percentage of total cost of all building materials on the project (mechanical, electrical, and plumbing components, and specialty items such as elevators excluded).

b. Substitutions: In case of conflict between project's recycled content goals and individual technical section requirements, Contractor may submit for Government approval, proposed alternative products or systems that provide equivalent performance and appearance and have greater contribution to project recycled content requirements. For all such proposed substitutions, submit with the Sustainability Action Plan accompanied by product data demonstrating equivalence.

1.5.7 Bio-Based Products

GP Denotation - V.b.1;

Use bio-based products. Bio-based is defined as commercial or industrial products (other than food or feed) that are composed in whole, or in significant part, of biological products, renewable agricultural materials (including plant, animal, and marine materials), or forestry materials.
Refer to www.biopreferred.gov.

Provide the following

documentation:

Documentation to indicate bio-based products have been used.

1.5.8 Landfill Disposal

GP Denotation - V.d.1;

Divert 60 percent or more of construction waste from landfill disposal.

Provide the following documentation:

Documentation showing total amount of construction debris diverted from landfill as a percentage of all construction debris on the project.

Include project's Construction Waste Management Plan and all dumpster haul tickets.

1.5.9 Ozone Depleting Substances

GP Denotation - V.e;

Eliminate the use of ozone depleting substances during and after construction where alternative environmentally preferable products are available and in accordance with either the Montreal Protocol and Title VI of the Clean Air Act Amendment of 1990 or equivalent overall air quality benefits that take into account lifecycle impacts.

Provide the following documentation:

a. MSDS sheets for all refrigerants provided

b. Products that meet the criteria of U.S. EPA Significant New Alternatives Policy, available at http://www.epa.gov/ozone/snap/index.html.

1.5.10 Validation and Certification Restrictions

The purchase of renewable energy credits (RECs) to meet project sustainable goals is prohibited.

PART 2 PRODUCTS

Not used.

PART 3 EXECUTION

3.1 SUSTAINABILITY COORDINATION

3.1.1 Coordinating Sustainability Documentation Progress

Provide sustainability focus and coordination at the following meetings to achieve sustainability goals. Contractor's designated TPC accredited sustainability professional responsible for GP and TPC documentation must participate in the following meetings to coordinate documentation completion.

a. Pre-Construction Conference: Discuss the following: TPC and HPSB/NSEDRC Checklists, Sustainability Action Plan, Construction submittal requirements and schedule, individuals responsible for achieving each Guiding Principle Requirement and TPC prerequisite and credit.

b. Construction Progress Meetings: Review GP and TPC sustainability requirements with project team including contractor and sub-contractor representatives. Demonstrate GP and TPC documentation is being collected and updated to the Sustainability Notebook and TPC Online tool.

(1) Project Closeout Meetings (Begin closeout meetings no later than 75 percent construction complete): Review Sustainability Notebook, and TPC Online submission for completeness and identify any outstanding issues relating to final documentation requirements.

(2) Final Sustainability Notebook Review

3.2 SUSTAINABILITY AWARD

Finalize the sustainability certification process and obtain the TPC Certification Plaque and Certificates, indicating completion of the projects sustainability goals.

3.2.1 Third Party Certification Plaque and Certificates

Obtain and install plaque and provide one original framed copy of the certificate. Mount certificates in 1 inch deep metal frames, with double matt, and wire hangers. Hang the Plaque in a prominent interior location approved by the Contracting Officer.

-- End of Section --

SECTION 01 35 26

GOVERNMENTAL SAFETY REQUIREMENTS
11/15

PART 1 GENERAL

1.1 REFERENCES

The publications listed below form a part of this specification to the extent referenced. The publications are referred to within the text by the basic designation only.

AMERICAN SOCIETY OF SAFETY ENGINEERS (ASSE/SAFE)

ASSE/SAFE A10.34	(2001; R 2012) Protection of the Public on or Adjacent to Construction Sites
ASSE/SAFE A10.44	(2014) Control of Energy Sources (Lockout/Tagout) for Construction and Demolition Operations
ASSE/SAFE Z244.1	(2003; R 2014) Control of Hazardous Energy Lockout/Tagout and Alternative Methods
ASSE/SAFE Z359.0	(2012) Definitions and Nomenclature Used for Fall Protection and Fall Arrest
ASSE/SAFE Z359.1	(2007) Safety Requirements for Personal Fall Arrest Systems, Subsystems and Components
ASSE/SAFE Z359.11	(2014) Safety Requirements for Full Body Harnesses
ASSE/SAFE Z359.12	(2009) Connecting Components for Personal Fall Arrest Systems
ASSE/SAFE Z359.13	(2013) Personal Energy Absorbers and Energy Absorbing Lanyards
ASSE/SAFE Z359.14	(2014) Safety Requirements for Self-Retracting Devices for Personal Fall Arrest and Rescue Systems
ASSE/SAFE Z359.15	(2014) Safety Requirements for Single Anchor Lifelines and Fall Arresters for Personal Fall Arrest Systems
ASSE/SAFE Z359.2	(2007) Minimum Requirements for a Comprehensive Managed Fall Protection Program
ASSE/SAFE Z359.3	(2007) Safety Requirements for Positioning and Travel Restraint Systems
ASSE/SAFE Z359.4	(2013) Safety Requirements for Assisted-Rescue and Self-Rescue Systems,

Subsystems and Components

ASSE/SAFE Z359.6	(2009) Specifications and Design Requirements for Active Fall Protection Systems
ASSE/SAFE Z359.7	(2011) Qualification and Verification Testing of Fall Protection Products

ASME INTERNATIONAL (ASME)

ASME B30.20	(2013; INT Oct 2010 - May 2012) Below-the-Hook Lifting Devices
ASME B30.22	(2010) Articulating Boom Cranes
ASME B30.26	(2015; INT Jun 2010 - Jun 2014) Rigging Hardware
ASME B30.3	(2012) Tower Cranes
ASME B30.5	(2014) Mobile and Locomotive Cranes
ASME B30.8	(2010) Floating Cranes and Floating Derricks
ASME B30.9	(2014; INT Feb 2011 - Nov 2013) Slings

ASTM INTERNATIONAL (ASTM)

ASTM F855	(2015) Standard Specifications for Temporary Protective Grounds to Be Used on De-energized Electric Power Lines and Equipment

INSTITUTE OF ELECTRICAL AND ELECTRONICS ENGINEERS (IEEE)

IEEE 1048	(2003) Guide for Protective Grounding of Power Lines
IEEE C2	(2012; Errata 1 2012; INT 1-4 2012; Errata 2 2013; INT 5-7 2013; INT 8-10 2014; INT 11 2015) National Electrical Safety Code

NATIONAL ELECTRICAL MANUFACTURERS ASSOCIATION (NEMA)

NEMA Z535.2	(2011) Environmental and Facility Safety Signs

NATIONAL FIRE PROTECTION ASSOCIATION (NFPA)

NFPA 10	(2013) Standard for Portable Fire Extinguishers
NFPA 241	(2013; Errata 2015) Standard for Safeguarding Construction,Alteration, and Demolition Operations
NFPA 51B	(2014) Standard for Fire Prevention During

	Welding, Cutting, and Other Hot Work
NFPA 70	(2014; AMD 1 2013; Errata 1 2013; AMD 2 2013; Errata 2 2013; AMD 3 2014; Errata 3-4 2014; AMD 4-6 2014) National Electrical Code
NFPA 70E	(2015; ERTA 1 2015) Standard for Electrical Safety in the Workplace

U.S. ARMY CORPS OF ENGINEERS (USACE)

EM 385-1-1	(2014) Safety and Health Requirements Manual

U.S. NATIONAL ARCHIVES AND RECORDS ADMINISTRATION (NARA)

10 CFR 20	Standards for Protection Against Radiation
29 CFR 1910	Occupational Safety and Health Standards
29 CFR 1910.146	Permit-required Confined Spaces
29 CFR 1910.147	Control of Hazardous Energy (Lock Out/Tag Out)
29 CFR 1910.333	Selection and Use of Work Practices
29 CFR 1915	Confined and Enclosed Spaces and Other Dangerous Atmospheres in Shipyard Employment
29 CFR 1915.89	Control of Hazardous Energy (Lockout/Tags-Plus)
29 CFR 1926	Safety and Health Regulations for Construction
29 CFR 1926.1400	Cranes and Derricks in Construction
29 CFR 1926.16	Rules of Construction
29 CFR 1926.450	Scaffolds
29 CFR 1926.500	Fall Protection
49 CFR 173	Shippers - General Requirements for Shipments and Packagings
CPL 2.100	(1995) Application of the Permit-Required Confined Spaces (PRCS) Standards, 29 CFR 1910.146

1.2 DEFINITIONS

1.2.1 Competent Person (CP)

The CP is a person designated in writing, who, through training, knowledge and experience, is capable of identifying, evaluating, and addressing

existing and predictable hazards in the working environment or working conditions that are dangerous to personnel, and who has authorization to take prompt corrective measures with regards to such hazards.

1.2.2 Competent Person, Confined Space

The CP, Confined Space, is a person meeting the competent person requirements as defined EM 385-1-1 Appendix Q, with thorough knowledge of OSHA's Confined Space Standard, 29 CFR 1910.146, and designated in writing to be responsible for the immediate supervision, implementation and monitoring of the confined space program, who through training, knowledge and experience in confined space entry is capable of identifying, evaluating and addressing existing and potential confined space hazards and, who has the authority to take prompt corrective measures with regard to such hazards.

1.2.3 Competent Person, Cranes and Rigging

The CP, Cranes and Rigging, as defined in EM 385-1-1 Appendix Q, is a person meeting the competent person, who has been designated in writing to be responsible for the immediate supervision, implementation and monitoring of the Crane and Rigging Program, who through training, knowledge and experience in crane and rigging is capable of identifying, evaluating and addressing existing and potential hazards and, who has the authority to take prompt corrective measures with regard to such hazards.

1.2.4 Competent Person, Excavation/Trenching

A CP, Excavation/Trenching, is a person meeting the competent person requirements as defined in EM 385-1-1 Appendix Q and 29 CFR 1926, who has been designated in writing to be responsible for the immediate supervision, implementation and monitoring of the excavation/trenching program, who through training, knowledge and experience in excavation/trenching is capable of identifying, evaluating and addressing existing and potential hazards and, who has the authority to take prompt corrective measures with regard to such hazards.

1.2.5 Competent Person, Fall Protection

The CP, Fall Protection, is a person meeting the competent person requirements as defined in EM 385-1-1 Appendix Q and in accordance with ASSE/SAFE Z359.0, who has been designated in writing by the employer to be responsible for immediate supervising, implementing and monitoring of the fall protection program, who through training, knowledge and experience in fall protection and rescue systems and equipment, is capable of identifying, evaluating and addressing existing and potential fall hazards and, who has the authority to take prompt corrective measures with regard to such hazards.

1.2.6 Competent Person, Scaffolding

The CP, Scaffolding is a person meeting the competent person requirements in EM 385-1-1 Appendix Q, and designated in writing by the employer to be responsible for immediate supervising, implementing and monitoring of the scaffolding program. The CP for Scaffolding has enough training, knowledge and experience in scaffolding to correctly identify, evaluate and address existing and potential hazards and also has the authority to take prompt corrective measures with regard to these hazards. CP qualifications must be documented and include experience on the specific scaffolding

systems/types being used, assessment of the base material that the scaffold will be erected upon, load calculations for materials and personnel, and erection and dismantling. The CP for scaffolding must have a documented, minimum of 8-hours of scaffold training to include training on the specific type of scaffold being used (e.g. mast-climbing, adjustable, tubular frame), in accordance with EM 385-1-1 Section 22.B.02.

1.2.7 Competent Person (CP) Trainer

A competent person trainer as defined in EM 385-1-1 Appendix Q, who is qualified in the material presented, and who possesses a working knowledge of applicable technical regulations, standards, equipment and systems related to the subject matter on which they are training Competent Persons. A competent person trainer must be familiar with the typical hazards and the equipment used in the industry they are instructing. The training provided by the competent person trainer must be appropriate to that specific industry. The competent person trainer must evaluate the knowledge and skills of the competent persons as part of the training process.

1.2.8 High Risk Activities

High Risk Activities are activities that involve work at heights, crane and rigging, excavations and trenching, scaffolding, electrical work, and confined space entry.

1.2.9 High Visibility Accident

A High Visibility Accident is any mishap which may generate publicity or high visibility.

1.2.10 Load Handling Equipment (LHE)

LHE is a term used to describe cranes, hoists and all other hoisting equipment (hoisting equipment means equipment, including crane, derricks, hoists and power operated equipment used with rigging to raise, lower or horizontally move a load).

1.2.11 Medical Treatment

Medical Treatment is treatment administered by a physician or by registered professional personnel under the standing orders of a physician. Medical treatment does not include first aid treatment even through provided by a physician or registered personnel.

1.2.12 Near Miss

A Near Miss is a mishap resulting in no personal injury and zero property damage, but given a shift in time or position, damage or injury may have occurred (e.g., a worker falls off a scaffold and is not injured; a crane swings around to move the load and narrowly misses a parked vehicle).

1.2.13 Operating Envelope

The Operating Envelope is the area surrounding any crane or load handling equipment. Inside this "envelope" is the crane, the operator, riggers and crane walkers, other personnel involved in the operation, rigging gear between the hook, the load, the crane's supporting structure (i.e. ground or rail), the load's rigging path, the lift and rigging procedure.

1.2.14 Qualified Person (QP)

The QP is a person designated in writing, who, by possession of a recognized degree, certificate, or professional standing, or extensive knowledge, training, and experience, has successfully demonstrated their ability to solve or resolve problems related to the subject matter, the work, or the project.

1.2.15 Qualified Person, Fall Protection (QP for FP)

A QP for FP is a person meeting the requirements of EM 385-1-1 Appendix Q, and ASSE/SAFE Z359.0, with a recognized degree or professional certificate and with extensive knowledge, training and experience in the fall protection and rescue field who is capable of designing, analyzing, and evaluating and specifying fall protection and rescue systems.

1.2.16 Recordable Injuries or Illnesses

Recordable Injuries or Illnesses are any work-related injury or illness that results in:

a. Death, regardless of the time between the injury and death, or the length of the illness;

b. Days away from work (any time lost after day of injury/illness onset);

c. Restricted work;

d. Transfer to another job;

e. Medical treatment beyond first aid;

f. Loss of consciousness; or

g. A significant injury or illness diagnosed by a physician or other licensed health care professional, even if it did not result in (a) through (f) above.

1.2.17 USACE Property and Equipment

Interpret "USACE" property and equipment specified in USACE EM 385-1-1 as Government property and equipment.

1.2.18 Load Handling Equipment (LHE) Accident or Load Handling Equipment Mishap

A LHE accident occurs when any one or more of the eight elements in the operating envelope fails to perform correctly during operation, including operation during maintenance or testing resulting in personnel injury or death; material or equipment damage; dropped load; derailment; two-blocking; overload; or collision, including unplanned contact between the load, crane, or other objects. A dropped load, derailment, two-blocking, overload and collision are considered accidents, even though no material damage or injury occurs. A component failure (e.g., motor burnout, gear tooth failure, bearing failure) is not considered an accident solely due to material or equipment damage unless the component failure results in damage to other components (e.g., dropped boom, dropped load, or

roll over). Document any mishap that meets the criteria described in the Contractor Significant Incident Report (CSIR) using the NAVFAC prescribed Navy Crane Center (NCC) form.

1.3 SUBMITTALS

Government approval is required for submittals with a "G" designation; submittals not having a "G" designation are for information only. When used, a designation following the "G" designation identifies the office that will review the submittal for the Government. Submittals with an "S" are for inclusion in the Sustainability Notebook, in conformance with Section 01 33 29 SUSTAINABILITY REPORTING. Submit the following in accordance with Section 01 33 00 SUBMITTAL PROCEDURES:

SD-01 Preconstruction Submittals

Accident Prevention Plan (APP); G

SD-06 Test Reports

Monthly Exposure Reports

Notifications and Reports

Accident Reports; G

LHE Inspection Reports

SD-07 Certificates

Contractor Safety Self-Evaluation Checklist

Crane Operators/Riggers

Standard Lift Plan; G

Critical Lift Plan ; G

Naval Architecture Analysis; G

Activity Hazard Analysis (AHA)

Confined Space Entry Permit

Hot Work Permit

Certificate of Compliance

Third Party Certification of Barge-Mounted Mobile Cranes

License Certificates

Radiography Operation Planning Work Sheet; G

1.4 MONTHLY EXPOSURE REPORTS

Provide a Monthly Exposure Report and attach to the monthly billing request. This report is a compilation of employee-hours worked each month for all site workers, both Prime and subcontractor. Failure to submit the

report may result in retention of up to 10 percent of the voucher.

1.5 CONTRACTOR SAFETY SELF-EVALUATION CHECKLIST

Contracting Officer will provide a "Contractor Safety Self-Evaluation checklist" to the Contractor at the pre-construction conference. Complete the checklist monthly and submit with each request for payment voucher. An acceptable score of 90 or greater is required. Failure to submit the completed safety self-evaluation checklist or achieve a score of at least 90 may result in retention of up to 10 percent of the voucher.

1.6 REGULATORY REQUIREMENTS

In addition to the detailed requirements included in the provisions of this contract, comply with the most recent edition of USACE EM 385-1-1, and the following federal, state, and local laws, ordinances, criteria, rules and regulations. Submit matters of interpretation of standards to the appropriate administrative agency for resolution before starting work. Where the requirements of this specification, applicable laws, criteria, ordinances, regulations, and referenced documents vary, the most stringent requirements govern.

1.6.1 Subcontractor Safety Requirements

For this contract, neither Contractor nor any subcontractor may enter into contract with any subcontractor that fails to meet the following requirements. The term subcontractor in this and the following paragraphs means any entity holding a contract with the Contractor or with a subcontractor at any tier.

1.6.1.1 Experience Modification Rate (EMR)

Subcontractors on this contract must have an effective EMR less than or equal to 1.10, as computed by the National Council on Compensation Insurance (NCCI) or if not available, as computed by the state agency's rating bureau in the state where the subcontractor is registered, when entering into a subcontract agreement with the Prime Contractor or a subcontractor at any tier. The Prime Contractor may submit a written request for additional consideration to the Contracting Officer where the specified acceptable EMR range cannot be achieved. Relaxation of the EMR range will only be considered for approval on a case-by-case basis for special conditions and must not be anticipated as tacit approval. Contractor's Site Safety and Health Officer (SSHO) must collect and maintain the certified EMR ratings for all subcontractors on the project and make them available to the Government at the Government's request.

1.6.1.2 OSHA Days Away from Work, Restricted Duty, or Job Transfer (DART) Rate

Subcontractors on this contract must have a DART rate, calculated from the most recent, complete calendar year, less than or equal to 3.4 when entering into a subcontract agreement with the Prime Contractor or a subcontractor at any tier. The OSHA Dart Rate is calculated using the following formula:

(N/EH) x 200,000

where:

N = number of injuries and illnesses with days away, restricted work, or job transfer

EH = total hours worked by all employees during most recent, complete calendar year

200,000 = base for 100 full-time equivalent workers (working 40 hours per week, 50 weeks per year)

The Prime Contractor may submit a written request for additional consideration to the Contracting Officer where the specified acceptable OSHA Dart rate range cannot be achieved for a particular subcontractor. Relaxation of the OSHA DART rate range will only be considered for approval on a case-by-case basis for special conditions and must not be anticipated as tacit approval. Contractor's Site Safety and Health Officer (SSHO) must collect and maintain self-certified OSHA DART rates for all subcontractors on the project and make them available to the Government at the Government's request.

1.7 SITE QUALIFICATIONS, DUTIES, AND MEETINGS

1.7.1 Personnel Qualifications

1.7.1.1 Site Safety and Health Officer (SSHO)

Provide an SSHO that meets the requirements of EM 385-1-1 Section 1. The SSHO must ensure that the requirements of 29 CFR 1926.16 are met for the project. Provide a Safety oversight team that includes a minimum of one (1) person at each project site to function as the Site Safety and Health Officer (SSHO). The SSHO or an equally-qualified Alternate SSHO must be at the work site at all times to implement and administer the Contractor's safety program and government-accepted Accident Prevention Plan. The SSHO and Alternate SSHO must have the required training, experience, and qualifications in accordance with EM 385-1-1 Section 01.A.17, and all associated sub-paragraphs.

If the SSHO is off-site for a period longer than 24 hours, an equally-qualified alternate SSHO must be provided and must fulfill the same roles and responsibilities as the primary SSHO. When the SSHO is temporarily (up to 24 hours) off-site, a Designated Representative (DR), as identified in the AHA may be used in lieu of an Alternate SSHO, and must be on the project site at all times when work is being performed. Note that the DR is a collateral duty safety position, with safety duties in addition to their full time occupation.

1.7.1.2 Contractor Quality Control (QC) Manager:

The Contractor Quality Control Manager can be the SSHO on this project.

1.7.1.3 Competent Person Qualifications

Provide Competent Persons in accordance with EM 385-1-1, Appendix Q and herein. Competent Persons for high risk activities include confined space, cranes and rigging, excavation/trenching, fall protection, and electrical work. The CP for these activities must be designated in writing, and meet the requirements for the specific activity (i.e. competent person, fall protection).

The Competent Person identified in the Contractor's Safety and Health

Program and accepted Accident Prevention Plan, must be on-site at all times when the work that presents the hazards associated with their professional expertise is being performed. Provide the credentials of the Competent Persons(s) to the the Contracting Officer for information in consultation with the Safety Office.

1.7.1.3.1 Competent Person for Confined Space Entry

Provide a Confined Space (CP) Competent Person who meets the requirements of EM 385-1-1, Appendix Q, and herein. The CP for Confined Space Entry must supervise the entry into each confined space.

1.7.1.3.2 Competent Person for Scaffolding

Provide a Competent Person for Scaffolding who meets the requirements of EM 385-1-1, Section 22.B.02 and herein.

1.7.1.3.3 Competent Person for Fall Protection

Provide a Competent Person for Fall Protection who meets the requirements of EM 385-1-1, Section 21.C.04 and herein.

1.7.1.4 Qualified Trainer Requirements

Individuals qualified to instruct the 40 hour contract safety awareness course, or portions thereof, must meet the definition of a Competent Person Trainer, and, at a minimum, possess a working knowledge of the following subject areas: EM 385-1-1, Electrical Standards,Lockout/Tagout, Fall Protection, Confined Space Entry for Construction; Excavation, Trenching and Soil Mechanics, and Scaffolds in accordance with 29 CFR 1926.450, Subpart L.

Instructors are required to:

a. Prepare class presentations that cover construction-related safety requirements.

b. Ensure that all attendees attend all sessions by using a class roster signed daily by each attendee. Maintain copies of the roster for at least five (5) years. This is a certification class and must be attended 100 percent. In cases of emergency where an attendee cannot make it to a session, the attendee can make it up in another class session for the same subject.

c. Update training course materials whenever an update of the EM 385-1-1 becomes available.

d. Provide a written exam of at least 50 questions. Students are required to answer 80 percent correctly to pass.

e. Request, review and incorporate student feedback into a continuous course improvement program.

1.7.1.5 Dredging Contract Requirements

1.7.1.5.1 Dredging Safety Personnel Requirements

a. Provide a minimum of one SSHO assigned per project site for the primary working shift.

b. For a project involving multiple work shifts, provide one full-time SSHO for each additional shift.

c. For individual dredging projects or sites with a dredge crew and fill crew on watch of 8 employees or less, a CDSO must be appointed, instead of an SSHO. The CDSO assumes the same responsibilities as a full-time SSHO.

d. An example of one dredging project site is reflected in each of the following:

(1) a mechanical dredge, tug(s) and scow(s), scow route, and material placement site; or

(2) a hydraulic pipeline dredge, attendant plant, and material placement site; or,

(3) a hopper dredge (include land-based material placement site - if applicable.)

e. For Hopper Dredges with the U.S. Coast Guard, documented crews may designate an officer as a Collateral Duty Safety Officer (CDSO) instead of having a full-time SSHO onboard if the officer meets the SSHO training and experience requirements.

1.7.1.5.2 SSHO Requirements for Dredging

a. In addition to requirements stated elsewhere in this specification, an individual serving as a SSHO must be present at the project site, located so that they have full mobility and reasonable access to all major work operations, for at least one shift in each 24 hour period when work is being performed. The SSHO must be available during their shift for immediate verbal consultation and notification, either by phone or radio.

b. The SSHO is a full-time, dedicated position, except as noted above, who must report to a senior project (or corporate) official. When the SSHO is permitted to be a collateral duty, the SSHO is not permitted to be in another position requiring continuous mechanical or equipment operations, such as equipment operators.

c. The SSHO must inspect all work areas and operations during initial set-up and at least monthly observe and provide personal oversight on each shift during dredging operations for projects with many work sites, more often for those with less work sites.

d. If the SSHO is off-site for a period longer than 24 hours, anotherqualified SSHO must be provided and fulfill the same roles and responsibilities as the SSHO during their absence.

1.7.1.5.3 Collateral Duty Safety Officer (CDSO) Requirements for Dredging

a. A CDSO is an individual who is assigned collateral duty safety responsibilities in addition to their full-time occupation, and who supports and supplements the SSHO efforts in managing, implementing and enforcing the Contractor's Safety and Health Program. The assigned CDSO must be an individual(s) with work oversight responsibilities, such as master, mate, fill foreman, or superintendent. A CDSO must not

be an employee responsible for continuous mechanical or equipment operations, such as an equipment operator.

b. A CDSO performs safety program tasks as assigned by the SSHO and must report safety findings to the SSHO. The SSHO must document results of safety findings and provide information for inclusion in the CQC reports to the Contracting Officer.

1.7.1.5.4 Safety Personnel Training Requirements for Dredging

A SSHO and a CDSO for dredging contracts must take either a formal classroom or online OSHA 30-hour Construction Safety Course, or an equivalent 30 hours of formal classroom or online safety and health training covering the subjects of the OSHA 30-hour Course in accordance with EM 385-1-1 Appendix A, paragraph 3.d.(3), applicable to dredging work, and given by qualified instructors. In exception to EM 385-1-1, Section 01.A.17, comply with the following:

a. The SSHO must maintain competency through having taken 8 hours of formal classroom or online safety and health related coursework every year. Hours spent as an instructor in such courses will be considered the same as attending them, but each course only gets credit once (for example, instructing a 1-hour asbestos awareness course 5 times in a year provides one hour credit for training).

b. The SSHO and a CDSO must have a minimum of three years of experience within the past five years in one of the following:

(1) Supervising/managing dredging activities

(2) Supervising/managing marine construction activities

(3) Supervising/managing land-based construction activities

(4) Work managing safety programs or processes

(5) Conducting hazard analyses and developing controls in activities or environments with similar hazards

1.7.1.6 Crane Operators/Riggers

Provide Operators meeting the requirements in EM 385-1-1, Section 15.B for Riggers and Section 16.B for Crane Operators. In addition, for mobile cranes with Original Equipment Manufacturer (OEM) rated capacities of 50,000 pounds or greater, designate crane operators qualified by a source that qualifies crane operators (i.e., union, a government agency, or an organization that tests and qualifies crane operators). Provide proof of current qualification.

1.7.2 Personnel Duties

1.7.2.1 Duties of the Site Safety and Health Officer (SSHO)

The SSHO must:

a. Conduct daily safety and health inspections and maintain a written log which includes area/operation inspected, date of inspection, identified hazards, recommended corrective actions, estimated and actual dates of corrections. Attach safety inspection logs to the Contractors' daily

production report.

b. Conduct mishap investigations and complete required accident reports. Report mishaps and near misses.

c. Use and maintain OSHA's Form 300 to log work-related injuries and illnesses occurring on the project site for Prime Contractors and subcontractors, and make available to the Contracting Officer upon request. Post and maintain the Form 300A on the site Safety Bulletin Board.

d. Maintain applicable safety reference material on the job site.

e. Attend the pre-construction conference, pre-work meetings including preparatory meetings, and periodic in-progress meetings.

f. Review the APP and AHAs for compliance with EM 385-1-1, and approve, sign, implement and enforce them.

g. Establish a Safety and Occupational Health (SOH) Deficiency Tracking System that lists and monitors outstanding deficiencies until resolution.

h. Ensure subcontractor compliance with safety and health requirements.

i. Maintain a list of hazardous chemicals on site and their material Safety Data Sheets (SDS).

j. Maintain a weekly list of high hazard activities involving energy, equipment, excavation, entry into confined space, and elevation, and be prepared to discuss details during QC Meetings.

k. Provide and keep a record of site safety orientation and indoctrination for Contractor employees, subcontractor employees, and site visitors.

Superintendent, QC Manager, and SSHO are subject to dismissal if the above duties are not being effectively carried out. If Superintendent, QC Manager, or SSHO are dismissed, project work will be stopped and will not be allowed to resume until a suitable replacement is approved and the above duties are again being effectively carried out.

1.7.3 Meetings

1.7.3.1 Preconstruction Conference

a. Contractor representatives who have a responsibility or significant role in accident prevention on the project must attend the preconstruction conference. This includes the project superintendent, Site Safety and Occupational Health officer, quality control manager, or any other assigned safety and health professionals who participated in the development of the APP (including the Activity Hazard Analyses (AHAs) and special plans, program and procedures associated with it).

b. Discuss the details of the submitted APP to include incorporated plans, programs, procedures and a listing of anticipated AHAs that will be developed and implemented during the performance of the contract. This list of proposed AHAs will be reviewed at the conference and an agreement will be reached between the Contractor and the Contracting Officer as to which phases will require an analysis. In addition,

establish a schedule for the preparation, submittal, and Government review of AHAs to preclude project delays.

c. Deficiencies in the submitted APP, identified during the Contracting Officer's review, must be corrected, and the APP re-submitted for review prior to the start of construction. Work is not permitted to begin work until an APP is established that is acceptable to the Contracting Officer.

d. The functions of a Preconstruction conference may take place at the Post-Award Kickoff meeting for Design Build Contracts.

1.7.3.2 Safety Meetings

Conduct safety meetings to review past activities, plan for new or changed operations, review pertinent aspects of appropriate AHA (by trade), establish safe working procedures for anticipated hazards, and provide pertinent Safety and Occupational Health (SOH) training and motivation. Conduct meetings at least once a month for all supervisors on the project location. The SSHO, supervisors, foremen, or CDSOs must conduct meetings at least once a week for the trade workers. Document meeting minutes to include the date, persons in attendance, subjects discussed, and names of individual(s) who conducted the meeting. Maintain documentation on-site and furnish copies to the Contracting Officer on request. Notify the Contracting Officer of all scheduled meetings 7 calendar days in advance.

1.8 ACCIDENT PREVENTION PLAN (APP)

A qualified person must prepare the written site-specific APP. Prepare the APP in accordance with the format and requirements of EM 385-1-1, Appendix A, and as supplemented herein. Cover all paragraph and subparagraph elements in EM 385-1-1, Appendix A. The APP must be job-specific and address any unusual or unique aspects of the project or activity for which it is written. The APP must interface with the Contractor's overall safety and health program referenced in the APP in the applicable APP element, and made site-specific. Describe the methods to evaluate past safety performance of potential subcontractors in the selection process. Also, describe innovative methods used to ensure and monitor safe work practices of subcontractors. The Government considers the Prime Contractor to be the "controlling authority" for all work site safety and health of the subcontractors. Contractors are responsible for informing their subcontractors of the safety provisions under the terms of the contract and the penalties for noncompliance, coordinating the work to prevent one craft from interfering with or creating hazardous working conditions for other crafts, and inspecting subcontractor operations to ensure that accident prevention responsibilities are being carried out. The APP must be signed by an officer of the firm (Prime Contractor senior person), the individual preparing the APP, the on-site superintendent, the designated SSHO, the Contractor Quality Control Manager, and any designated Certified Safety Professional (CSP) or Certified Health Physicist (CIH). The SSHO must provide and maintain the APP and a log of signatures by each subcontractor foreman, attesting that they have read and understand the APP, and make the APP and log available on-site to the Contracting Officer. If English is not the foreman's primary language, the Prime Contractor must provide an interpreter.

Submit the APP to the Contracting Officer 15 calendar days prior to the date of the preconstruction conference for acceptance. Work cannot proceed without an accepted APP. Once reviewed and accepted by the Contracting

Officer, the APP and attachments will be enforced as part of the contract. Disregarding the provisions of this contract or the accepted APP is cause for stopping of work, at the discretion of the Contracting Officer, until the matter has been rectified. Continuously review and amend the APP, as necessary, throughout the life of the contract. Changes to the accepted APP must be made with the knowledge and concurrence of the Contracting Officer, project superintendent, SSHO and Quality Control Manager. Incorporate unusual or high-hazard activities not identified in the original APP as they are discovered. Should any severe hazard exposure (i.e. imminent danger) become evident, stop work in the area, secure the area, and develop a plan to remove the exposure and control the hazard. Notify the Contracting Officer within 24 hours of discovery. Eliminate and remove the hazard. In the interim, take all necessary action to restore and maintain safe working conditions in order to safeguard onsite personnel, visitors, the public (as defined by ASSE/SAFE A10.34), and the environment.

1.8.1 Names and Qualifications

Provide plans in accordance with the requirements outlined in Appendix A of EM 385-1-1, including the following:

a. Names and qualifications (resumes including education, training, experience and certifications) of site safety and health personnel designated to perform work on this project to include the designated Site Safety and Health Officer and other competent and qualified personnel to be used. Specify the duties of each position.

b. Qualifications of competent and of qualified persons. As a minimum, designate and submit qualifications of competent persons for each of the following major areas: excavation; scaffolding; fall protection; hazardous energy; confined space; health hazard recognition, evaluation and control of chemical, physical and biological agents; and personal protective equipment and clothing to include selection, use and maintenance.

1.8.2 Plans

Provide plans in the APP in accordance with the requirements outlined in Appendix A of EM 385-1-1, including the following:

1.8.2.1 Confined Space Entry Plan

Develop a confined or enclosed space entry plan in accordance with EM 385-1-1, applicable OSHA standards 29 CFR 1910, 29 CFR 1915, and 29 CFR 1926, OSHA Directive CPL 2.100, and any other federal, state and local regulatory requirements identified in this contract. Identify the qualified person's name and qualifications, training, and experience. Delineate the qualified person's authority to direct work stoppage in the event of hazardous conditions. Include procedure for rescue by contractor personnel and the coordination with emergency responders. (If there is no confined space work, include a statement that no confined space work exists and none will be created.)

1.8.2.2 Standard Lift Plan (SLP)

Plan lifts to avoid situations where the operator cannot maintain safe control of the lift. Prepare a written SLP in accordance with EM 385-1-1, Section 16.A.03, using Form 16-2 for every lift or series of lifts (if duty

cycle or routine lifts are being performed). The SLP must be developed, reviewed and accepted by all personnel involved in the lift in conjunction with the associated AHA. Signature on the AHA constitutes acceptance of the plan. Maintain the SLP on the LHE for the current lift(s) being made. Maintain historical SLPs for a minimum of 3 months.

1.8.2.3 Critical Lift Plan - Crane or Load Handling Equipment

Provide a Critical Lift Plan as required by EM 385-1-1, Section 16.H.01, using Form 16-3. Critical lifts require detailed planning and additional or unusual safety precautions. Develop and submit a critical lift plan to the Contracting Officer 30 calendar days prior to critical lift. Comply with load testing requirements in accordance with EM 385-1-1, Section 16.F.03.

In addition to the requirements of EM 385-1-1, Section 16.H.02, the critical lift plan must include the following:

a. For lifts of personnel, demonstrate compliance with the requirements of 29 CFR 1926.1400 and EM 385-1-1, Section 16.T.

b. For barge mounted mobile cranes, provide a Naval Architecture Analysis and include an LHE Manufacturer's Floating Service Load Chart in accordance with the criteria from the selected standard in EM 385-1-1, Section 16.L.02. The Floating Service Load Chart must provide a table of rated load versus boom angle and radius. The Floating Service Load Chart must also provide the maximum allowable machine list and trim associated with the tabular loads and radii provided. If the Manufacturer's Floating Service Load Chart is not available, a floating service load chart may be developed and provided by a qualified Registered Professional Engineer (RPE), competent in the field of floating cranes. The Load Chart must be in accordance with the criteria from the selected standard in EM 385-1-1, Section 16.L; provide a table of rated load versus boom angle and radius; provide the maximum allowable machine list and machine trim associated with the tabular loads and radii provided; and be stamped by a RPE qualified and competent in the field of floating cranes. The RPE, competent in the field of floating cranes must stamp and certify (sign) that the Naval Architectural Analysis (NAA) meets the requirements of EM 385-1-1, Section 16.L.03.

c. Multi-purpose machines, material handling equipment, and construction equipment used to lift loads that are suspended by rigging gear, require proof of authorization from the machine OEM that the machine is capable of making lifts of loads suspended by rigging equipment. Demonstrate that the operator is properly trained and that the equipment is properly configured to make such lifts and is equipped with a load chart.

1.8.2.4 Fall Protection and Prevention (FP&P) Plan

The plan must comply with the requirements of EM 385-1-1, Section 21.D and ASSE/SAFE Z359.2, be site specific, and address all fall hazards in the work place and during different phases of construction. Address how to protect and prevent workers from falling to lower levels when they are exposed to fall hazards above 6 feet. A competent person or qualified person for fall protection must prepare and sign the plan documentation. Include fall protection and prevention systems, equipment and methods employed for every phase of work, roles and responsibilities, assisted

rescue, self-rescue and evacuation procedures, training requirements, and monitoring methods. Review and revise, as necessary, the Fall Protection and Prevention Plan documentation as conditions change, but at a minimum every six months, for lengthy projects, reflecting any changes during the course of construction due to changes in personnel, equipment, systems or work habits. Keep and maintain the accepted Fall Protection and Prevention Plan documentation at the job site for the duration of the project. Include the Fall Protection and Prevention Plan documentation in the Accident Prevention Plan (APP).

1.8.2.5 Rescue and Evacuation Plan

Provide a Rescue and Evacuation Plan in accordance with EM 385-1-1 Section 21.N and ASSE/SAFE Z359.2, and include in the FP&P Plan and as part of the APP. Include a detailed discussion of the following: methods of rescue; methods of self-rescue; equipment used; training requirement; specialized training for the rescuers; procedures for requesting rescue and medical assistance; and transportation routes to a medical facility.

1.8.2.6 Hazardous Energy Control Program (HECP)

Develop a HECP in accordance with EM 385-1-1 Section 12, 29 CFR 1910.147, 29 CFR 1910.333, 29 CFR 1915.89, ASSE/SAFE Z244.1, and ASSE/SAFE A10.44. Submit this HECP as part of the Accident Prevention Plan (APP). Conduct a preparatory meeting and inspection with all effected personnel to coordinate all HECP activities. Document this meeting and inspection in accordance with EM 385-1-1, Section 12.A.02. Ensure that each employee is familiar with and complies with these procedures.

1.8.2.7 Excavation Plan

Identify the safety and health aspects of excavation, and provide and prepare the plan in accordance with EM 385-1-1, Section 25.A and Section 31 00 00 EARTHWORK.

1.8.2.8 Occupant Protection Plan

Identify the safety and health aspects of lead-based paint removal, prepared in accordance with Section 02 82 33.13 20 REMOVAL/CONTROL AND DISPOSAL OF PAINT WITH LEAD.

1.8.2.9 Lead Compliance Plan

Identify the safety and health aspects of lead work, and prepare in accordance with Section 02 83 13.00 20 LEAD IN CONSTRUCTION.

1.8.2.10 Asbestos Hazard Abatement Plan

Identify the safety and health aspects of asbestos work, and prepare in accordance with Section 02 82 16.00 20 ENGINEERING CONTROL OF ASBESTOS CONTAINING MATERIALS.

1.8.2.11 Site Demolition Plan

Identify the safety and health aspects, and prepare in accordance with Section 02 41 00 DEMOLITION AND DECONSTRUCTION and referenced sources. Include engineering survey as applicable.

1.9 ACTIVITY HAZARD ANALYSIS (AHA)

Before beginning each activity, task or Definable Feature of Work (DFOW) involving a type of work presenting hazards not experienced in previous project operations, or where a new work crew or subcontractor is to perform the work, the Contractor(s) performing that work activity must prepare an AHA. AHAs must be developed by the Prime Contractor, subcontractor, or supplier performing the work, and provided for Prime Contractor review and approval before submitting to the Contracting Officer. AHAs must be signed by the SSHO, Superintendent, QC Manager and the subcontractor Foreman performing the work. Format the AHA in accordance with EM 385-1-1, Section 1 or as directed by the Contracting Officer. Submit the AHA for review at least 15 working days prior to the start of each activity task, or DFOW. The Government reserves the right to require the Contractor to revise and resubmit the AHA if it fails to effectively identify the work sequences, specific anticipated hazards, site conditions, equipment, materials, personnel and the control measures to be implemented.

AHAs must identify competent persons required for phases involving high risk activities, including confined entry, crane and rigging, excavations, trenching, electrical work, fall protection, and scaffolding.

1.9.1 AHA Management

Review the AHA list periodically (at least monthly) at the Contractor supervisory safety meeting, and update as necessary when procedures, scheduling, or hazards change. Use the AHA during daily inspections by the SSHO to ensure the implementation and effectiveness of the required safety and health controls for that work activity.

1.9.2 AHA Signature Log

Each employee performing work as part of an activity, task or DFOW must review the AHA for that work and sign a signature log specifically maintained for that AHA prior to starting work on that activity. The SSHO must maintain a signature log on site for every AHA. Provide employees whose primary language is other than English, with an interpreter to ensure a clear understanding of the AHA and its contents.

1.10 DISPLAY OF SAFETY INFORMATION

1.10.1 Safety Bulletin Board

Within one calendar day(s) after commencement of work, erect a safety bulletin board at the job site. Where size, duration, or logistics of project do not facilitate a bulletin board, an alternative method, acceptable to the Contracting Officer, that is accessible and includes all mandatory information for employee and visitor review, may be deemed as meeting the requirement for a bulletin board. Include and maintain information on safety bulletin board as required by EM 385-1-1, Section 01.A.07. Additional items required to be posted include:

a. Confined space entry permit.

b. Hot work permit.

1.10.2 Safety and Occupational Health (SOH) Deficiency Tracking System

Establish a SOH deficiency tracking system that lists and monitors the

status of SOH deficiencies in chronological order. Use the tracking system to evaluate the effectiveness of the APP. A monthly evaluation of the data must be discussed in the QC or SOH meeting with everyone on the project. The list must be posted on the project bulletin board and updated daily, and provide the following information:

a. Date deficiency identified;

b. Description of deficiency;

c. Name of person responsible for correcting deficiency;

d. Projected resolution date;

e. Date actually resolved.

1.11 SITE SAFETY REFERENCE MATERIALS

Maintain safety-related references applicable to the project, including those listed in paragraph REFERENCES. Maintain applicable equipment manufacturer's manuals.

1.12 EMERGENCY MEDICAL TREATMENT

Contractors must arrange for their own emergency medical treatment. Government has no responsibility to provide emergency medical treatment.

1.13 NOTIFICATIONS and REPORTS

1.13.1 Mishap Notification

Notify the Contracting Officer as soon as practical, but no more than twenty-four hours, after any mishaps, including recordable accidents, incidents, and near misses, as defined in EM 385-1-1 Appendix Q, any report of injury, illness, load handling equipment (LHE) or rigging mishaps, or any property damage. The Contractor is responsible for obtaining appropriate medical and emergency assistance and for notifying fire, law enforcement, and regulatory agencies. Immediate reporting is required for electrical mishaps, to include Arc Flash; shock; uncontrolled release of hazardous energy (includes electrical and non-electrical); load handling equipment or rigging; fall from height (any level other than same surface); and underwater diving. These mishaps must be investigated in depth to identify all causes and to recommend hazard control measures.

Within notification include Contractor name; contract title; type of contract; name of activity, installation or location where accident occurred; date and time of accident; names of personnel injured; extent of property damage, if any; extent of injury, if known, and brief description of accident (for example, type of construction equipment used and PPE used). Preserve the conditions and evidence on the accident site until the Government investigation team arrives on-site and Government investigation is conducted. Assist and cooperate fully with the Government's investigation(s) of any mishap.

1.13.2 Accident Reports

a. Conduct an accident investigation for recordable injuries and illnesses, property damage, and near misses as defined in EM 385-1-1, to establish the root cause(s) of the accident. Complete the

applicable NAVFAC Contractor Incident Reporting System (CIRS), and electronically submit via the NAVFAC Enterprise Safety Applications Management System (ESAMS). The Contracting Officer will provide copies of any required or special forms.

b. Near Misses: For Navy Projects, complete the applicable documentation in NAVFAC Contractor Incident Reporting System (CIRS), and electronically submit via the NAVFAC Enterprise Safety Applications Management System (ESAMS). Near miss reports are considered positive and proactive Contractor safety management actions.

c. Conduct an accident investigation for any load handling equipment accident (including rigging gear accidents) to establish the root cause(s) of the accident. Complete the LHE Accident Report (Crane and Rigging Gear) form and provide the report to the Contracting Officer within 30 calendar days of the accident. Do not proceed with crane operations until cause is determined and corrective actions have been implemented to the satisfaction of the Contracting Officer. The Contracting Officer will provide a blank copy of the accident report form.

1.13.3 LHE Inspection Reports

Submit LHE inspection reports required in accordance with EM 385-1-1 and as specified herein with Daily Reports of Inspections.

1.13.4 Certificate of Compliance and Pre-lift Plan/Checklist for LHE and Rigging

Provide a FORM 16-1 Certificate of Compliance for LHE entering an activity under this contract and in accordance with EM 385-1-1. Post certifications on the crane.

Develop a Standard Lift Plan (SLP) in accordance with EM 385-1-1, Section 16.H.03 using Form 16-2 Standard Pre-Lift Crane Plan/Checklist for each lift planned. Submit SLP to the Contracting Officer for approval within 15 calendar days in advance of planned lift.

1.14 HOT WORK

1.14.1 Permit and Personnel Requirements

Submit and obtain a written permit prior to performing "Hot Work" (i.e. welding or cutting) or operating other flame-producing/spark producing devices, from the Fire Division. A permit is required from the Explosives Safety Office for work in and around where explosives are processed, stored, or handled. CONTRACTORS ARE REQUIRED TO MEET ALL CRITERIA BEFORE A PERMIT IS ISSUED. Provide at least two 20 pound 4A:20 BC rated extinguishers for normal "Hot Work". The extinguishers must be current inspection tagged, and contain an approved safety pin and tamper resistant seal. It is also mandatory to have a designated FIRE WATCH for any "Hot Work" done at this activity. The Fire Watch must be trained in accordance with NFPA 51B and remain on-site for a minimum of one hour after completion of the task or as specified on the hot work permit.

When starting work in the facility, require personnel to familiarize themselves with the location of the nearest fire alarm boxes and place in memory the emergency Fire Division phone number. REPORT ANY FIRE, NO MATTER HOW SMALL, TO THE RESPONSIBLE FIRE DIVISION IMMEDIATELY.

1.14.2 Work Around Flammable Materials

Obtain services from a NFPA Certified Marine Chemist for "HOT WORK" within or around flammable materials (such as fuel systems or welding/cutting on fuel pipes) or confined spaces (such as sewer wet wells, manholes, or vaults) that have the potential for flammable or explosive atmospheres.

Whenever these materials, except beryllium and chromium (VI), are encountered in indoor operations, local mechanical exhaust ventilation systems that are sufficient to reduce and maintain personal exposures to within acceptable limits must be used and maintained in accordance with manufacturer's instruction and supplemented by exceptions noted in EM 385-1-1, Section 06.H

1.15 RADIATION SAFETY REQUIREMENTS

Submit License Certificates, employee training records, and Leak Test Reports for radiation materials and equipment to the Contracting Officer and Radiation Safety Office (RSO), and Contracting Oversight Technician (COT) for all specialized and licensed material and equipment proposed for use on the construction project. Maintain on-site records whenever licensed radiological materials or ionizing equipment are on government property.

Protect workers from radiation exposure in accordance with 10 CFR 20, ensuring any personnel exposures are maintained As Low As Reasonably Achievable.

1.15.1 Radiography Operation Planning Work Sheet

Submit a Radiography Operation Planning Work Sheet to Contracting Officer 14 days prior to commencement of operations involving radioactive materials or radiation generating devices. The Contracting Officer and COT will review this worksheet and submit questions and comments.

Contractors must use primary dosimeters process by a National Voluntary Laboratory Accreditation Program (NVLAP) accredited laboratory.

1.15.2 Site Access and Security

Coordinate site access and security requirements with the Contracting Officer and COT for all radiological materials and equipment containing ionizing radiation that are proposed for use on a government facility. The Navy COT or authorized representative will meet the Contractor at a designated location, ensure safety of the materials being transported, and will escort the Contractor to the job site and return upon completion of the work.

Provide a copy of all calibration records, and utilization records to the COT for radiological operations performed on the site.

1.15.3 Loss or Release and Unplanned Personnel Exposure

Loss or release of radioactive materials, and unplanned personnel exposures must be reported immediately to the Contracting Officer, RSO, and Base Security Department Emergency Number.

1.15.4 Site Demarcation and Barricade

Properly demark and barricade an area surrounding radiological operations to preclude personnel entrance, in accordance with EM 385-1-1, Nuclear Regulatory Commission, and Applicable State regulations and license requirements, and in accordance with requirements established in the accepted Radiography Operation Planning Work Sheet.

Do not close or obstruct streets, walks, and other facilities occupied and used by the Government without written permission from the Contracting Officer.

1.15.5 Security of Material and Equipment

Properly secure the radiological material and ionizing radiation equipment at all times, including keeping the devices in a properly marked and locked container, and secondarily locking the container to a secure point in the Contractor's vehicle or other approved storage location during transportation and while not in use. While in use, maintain a continuous visual observation on the radiological material and ionizing radiation equipment. In instances where radiography is scheduled near or adjacent to buildings or areas having limited access or one-way doors, make no assumptions as to building occupancy. Where necessary, the Contracting Officer will direct the Contractor to conduct an actual building entry, search, and alert. Where removal of personnel from such a building cannot be accomplished and it is otherwise safe to proceed with the radiography, position a fully instructed employee inside the building or area to prevent exiting while external radiographic operations are in process.

1.15.6 Transportation of Material

Comply with 49 CFR 173 for Transportation of Regulated Amounts of Radioactive Material. Notify Local Fire authorities and the site Radiation Safety officer (RSO) of any Radioactive Material use.

1.15.7 Schedule for Exposure or Unshielding

Actual exposure of the radiographic film or unshielding the source must not be initiated until after 5 p.m. on weekdays.

1.15.8 Transmitter Requirements

Adhere to the base policy concerning the use of transmitters, such as radios and cell phones. Obey Emissions control (EMCON) restrictions.

1.16 CONFINED SPACE ENTRY REQUIREMENTS.

Confined space entry must comply with Section 34 of EM 385-1-1, OSHA 29 CFR 1926, OSHA 29 CFR 1910, OSHA 29 CFR 1910.146, and OSHA Directive CPL 2.100. Any potential for a hazard in the confined space requires a permit system to be used. Contractors entering and working in confined spaces while performing shipyard industry work are required to follow the requirements of OSHA 29 CFR 1915 Subpart B.

1.16.1 Entry Procedures

Prohibit entry into a confined space by personnel for any purpose, including hot work, until the qualified person has conducted appropriate tests to ensure the confined or enclosed space is safe for the work

intended and that all potential hazards are controlled or eliminated and documented. Comply with EM 385-1-1, Section 34 for entry procedures. Hazards pertaining to the space must be reviewed with each employee during review of the AHA.

1.16.2 Forced Air Ventilation

Forced air ventilation is required for all confined space entry operations and the minimum air exchange requirements must be maintained to ensure exposure to any hazardous atmosphere is kept below its action level.

1.16.3 Sewer Wet Wells

Sewer wet wells require continuous atmosphere monitoring with audible alarm for toxic gas detection.

1.16.4 Rescue Procedures and Coordination with Local Emergency Responders

Develop and implement an on-site rescue and recovery plan and procedures. The rescue plan must not rely on local emergency responders for rescue from a confined space.

1.17 DIVE SAFETY REQUIREMENTS

Develop a Dive Operations Plan, AHA, emergency management plan, and personnel list that includes qualifications, for each separate diving operation. Submit these documents to the District Dive Coordinator (DDC) for review and acceptance at least 15 working days prior to commencement of diving operations. These documents must be at the diving location at all times. Provide each of these documents as a part of the project file.

1.18 SEVERE STORM PLAN

In the event of a severe storm warning, the Contractor must:

a. Secure outside equipment and materials and place materials that could be damaged in protected areas.

b. Check surrounding area, including roof, for loose material, equipment, debris, and other objects that could be blown away or against existing facilities.

c. Ensure that temporary erosion controls are adequate.

PART 2 PRODUCTS

2.1 CONFINED SPACE SIGNAGE

Provide permanent signs integral to or securely attached to access covers for new permit-required confined spaces. Signs for confined spaces must comply with NEMA Z535.2. Signs wording: "DANGER--PERMIT-REQUIRED CONFINED SPACE, DO NOT ENTER" in bold letters a minimum of one inch in height and constructed to be clearly legible with all paint removed. The signal word "DANGER" must be red and readable from 5 feet.

PART 3 EXECUTION

3.1 CONSTRUCTION AND OTHER WORK

Comply with EM 385-1-1, NFPA 70, NFPA 70E, NFPA 241, the APP, the AHA, Federal and State OSHA regulations, and other related submittals and activity fire and safety regulations. The most stringent standard prevails.

PPE is governed in all areas by the nature of the work the employee is performing. Use personal hearing protection at all times in designated noise hazardous areas or when performing noise hazardous tasks. Safety glasses must be worn or carried/available on each person. Mandatory PPE includes:

a. Hard Hat

b. Long Pants

c. Appropriate Safety Shoes

d. Appropriate Class Reflective Vests

3.1.1 Worksite Communication

Employees working alone in a remote location or away from other workers must be provided an effective means of emergency communications (i.e., cellular phone, two-way radios, land-line telephones or other acceptable means). The selected communication must be readily available (easily within the immediate reach) of the employee and must be tested prior to the start of work to verify that it effectively operates in the area/environment. An employee check-in/check-out communication procedure must be developed to ensure employee safety.

3.1.2 Hazardous Material Use

Each hazardous material must receive approval from the Contracting Office or their designated representative prior to being brought onto the job site or prior to any other use in connection with this contract. Allow a minimum of 10 working days for processing of the request for use of a hazardous material.

3.1.3 Hazardous Material Exclusions

Notwithstanding any other hazardous material used in this contract, radioactive materials or instruments capable of producing ionizing/non-ionizing radiation (with the exception of radioactive material and devices used in accordance with EM 385-1-1 such as nuclear density meters for compaction testing and laboratory equipment with radioactive sources) as well as materials which contain asbestos, mercury or polychlorinated biphenyls, di-isocyanates, lead-based paint, and hexavalent chromium, are prohibited. The Contracting Officer, upon written request by the Contractor, may consider exceptions to the use of any of the above excluded materials. Low mercury lamps used within fluorescent lighting fixtures are allowed as an exception without further Contracting Officer approval. Notify the Radiation Safety Officer (RSO) prior to excepted items of radioactive material and devices being brought on base.

3.1.4 Unforeseen Hazardous Material

Contract documents identify materials such as PCB, lead paint, and friable and non-friable asbestos and other OSHA regulated chemicals (i.e. 29 CFR Part 1910.1000). If material(s) that may be hazardous to human health upon disturbance are encountered during construction operations, stop that portion of work and notify the Contracting Officer immediately. Within 14 calendar days the Government will determine if the material is hazardous. If material is not hazardous or poses no danger, the Government will direct the Contractor to proceed without change. If material is hazardous and handling of the material is necessary to accomplish the work, the Government will issue a modification pursuant to FAR 52.243-4, "Changes" and FAR 52.236-2, "Differing Site Conditions."

3.2 PRE-OUTAGE COORDINATION MEETING

Apply for utility outages at least 14 days in advance. As a minimum, the request must include the location of the outage, utilities being affected, duration of outage and any necessary sketches. Special requirements for electrical outage requests are contained elsewhere in this specification section. Once approved, and prior to beginning work on the utility system requiring shut down, attend a pre-outage coordination meeting with the Contracting Officer to review the scope of work and the lock-out/tag-out procedures for worker protection. No work will be performed on energized electrical circuits unless proof is provided that no other means exist.

3.3 CONTROL OF HAZARDOUS ENERGY (LOCKOUT/TAGOUT)

Provide and operate a Hazardous Energy Control Program (HECP) in accordance with EM 385-1-1 Section 12, 29 CFR 1910.333, 29 CFR 1915.89, and paragraph HAZARDOUS ENERGY CONTROL PROGRAM (HECP).

3.4 FALL PROTECTION PROGRAM

Establish a fall protection program, for the protection of all employees exposed to fall hazards. Within the program include company policy, identify roles and responsibilities, education and training requirements, fall hazard identification, prevention and control measures, inspection, storage, care and maintenance of fall protection equipment and rescue and evacuation procedures in accordance with ASSE/SAFE Z359.2 and EM 385-1-1, Sections 21.A and 21.D.

3.4.1 Training

Institute a fall protection training program. As part of the Fall Protection Program, provide training for each employee who might be exposed to fall hazards. Provide training by a competent person for fall protection in accordance with EM 385-1-1, Section 21.C. Document training and practical application of the competent person in accordance with EM 385-1-1, Section 21.C.04 and ASSE/SAFE Z359.2 in the AHA.

3.4.2 Fall Protection Equipment and Systems

Enforce use of personal fall protection equipment and systems designated (to include fall arrest, restraint, and positioning) for each specific work activity in the Site Specific Fall Protection and Prevention Plan and AHA at all times when an employee is exposed to a fall hazard. Protect employees from fall hazards as specified in EM 385-1-1, Section 21.

Provide personal fall protection equipment, systems, subsystems, and components that comply with EM 385-1-1 Section 21.I, 29 CFR 1926.500 Subpart M,ASSE/SAFE Z359.0, ASSE/SAFE Z359.1, ASSE/SAFE Z359.2, ASSE/SAFE Z359.3, ASSE/SAFE Z359.4, ASSE/SAFE Z359.6, ASSE/SAFE Z359.7, ASSE/SAFE Z359.11, ASSE/SAFE Z359.12, ASSE/SAFE Z359.13, ASSE/SAFE Z359.14, and ASSE/SAFE Z359.15.

3.4.2.1 Additional Personal Fall Protection

In addition to the required fall protection systems, other protection such as safety skiffs, personal floatation devices, and life rings, are required when working above or next to water in accordance with EM 385-1-1, Sections 21.O through 21.O.06. Personal fall protection systems and equipment are required when working from an articulating or extendible boom, swing stages, or suspended platform. In addition, personal fall protection systems are required when operating other equipment such as scissor lifts. The need for tying-off in such equipment is to prevent ejection of the employee from the equipment during raising, lowering, travel, or while performing work.

3.4.2.2 Personal Fall Protection Harnesses

Only a full-body harness with a shock-absorbing lanyard or self-retracting lanyard is an acceptable personal fall arrest body support device. The use of body belts is not acceptable. Harnesses must have a fall arrest attachment affixed to the body support (usually a Dorsal D-ring) and specifically designated for attachment to the rest of the system. Snap hooks and carabiners must be self-closing and self-locking, capable of being opened only by at least two consecutive deliberate actions and have a minimum gate strength of 3,600 lbs in all directions. Use webbing, straps, and ropes made of synthetic fiber. The maximum free fall distance when using fall arrest equipment must not exceed 6 feet, unless the proper energy absorbing lanyard is used. Always take into consideration the total fall distance and any swinging of the worker (pendulum-like motion), that can occur during a fall, when attaching a person to a fall arrest system. All full body harnesses must be equipped with Suspension Trauma Preventers such as stirrups, relief steps, or similar in order to provide short-term relief from the effects of orthostatic intolerance in accordance with EM 385-1-1, Section 21.I.06.

3.4.3 Fall Protection for Roofing Work

Implement fall protection controls based on the type of roof being constructed and work being performed. Evaluate the roof area to be accessed for its structural integrity including weight-bearing capabilities for the projected loading.

a. Low Sloped Roofs:

(1) For work within 6 feet of an edge, on a roof having a slope less than or equal to 4:12 (vertical to horizontal), protect personnel from falling by use of personal fall arrest/restraint systems, guardrails, or safety nets. A safety monitoring system is not adequate fall protection and is not authorized. Provide in accordance with 29 CFR 1926.500.

(2) For work greater than 6 feet from an edge, erect and install warning lines in accordance with 29 CFR 1926.500 and EM 385-1-1, Section L.

b. Steep-Sloped Roofs: Work on a roof having a slope greater than 4:1 (vertical to horizontal) requires a personal fall arrest system, guardrails with toe-boards, or safety nets. This requirement also applies to residential or housing type construction.

3.4.4 Horizontal Lifelines (HLL)

Provide HLL in accordance with EM 385-1-1, Section 21.I.08.d.2. Commercially manufactured horizontal lifelines (HLL) must be designed, installed, certified and used, under the supervision of a qualified person, for fall protection as part of a complete fall arrest system which maintains a safety factor of 2 (29 CFR 1926.500). The competent person for fall protection may (if deemed appropriate by the qualified person) supervise the assembly, disassembly, use and inspection of the HLL system under the direction of the qualified person. Locally manufactured HLLs are not acceptable unless they are custom designed for limited or site specific applications by a Registered Professional Engineer who is qualified in designing HLL systems.

3.4.5 Guardrails and Safety Nets

Design, install and use guardrails and safety nets in accordance with EM 385-1-1, Section 21.F.01 and 29 CFR 1926 Subpart M.

3.4.6 Rescue and Evacuation Plan and Procedures

When personal fall arrest systems are used, ensure that the mishap victim can self-rescue or can be rescued promptly should a fall occur. Prepare a Rescue and Evacuation Plan and include a detailed discussion of the following: methods of rescue; methods of self-rescue or assisted-rescue; equipment used; training requirement; specialized training for the rescuers; procedures for requesting rescue and medical assistance; and transportation routes to a medical facility. Include the Rescue and Evacuation Plan within the Activity Hazard Analysis (AHA) for the phase of work, in the Fall Protection and Prevention (FP&P) Plan, and the Accident Prevention Plan (APP). The plan must comply with the requirements of EM 385-1-1, ASSE/SAFE Z359.2, and ASSE/SAFE Z359.4.

3.5 WORK PLATFORMS

3.5.1 Scaffolding

Provide employees with a safe means of access to the work area on the scaffold. Climbing of any scaffold braces or supports not specifically designed for access is prohibited. Comply with the following requirements:

a. Scaffold platforms greater than 20 feet in height must be accessed by use of a scaffold stair system.

b. Ladders commonly provided by scaffold system manufacturers are prohibited for accessing scaffold platforms greater than 20 feet maximum in height.

c. An adequate gate is required.

d. Employees performing scaffold erection and dismantling must be qualified.

e. Scaffold must be capable of supporting at least four times the maximum intended load or without appropriate fall protection as delineated in the accepted fall protection and prevention plan.

f. Stationary scaffolds must be attached to structural building components to safeguard against tipping forward or backward.

g. Special care must be given to ensure scaffold systems are not overloaded.

h. Side brackets used to extend scaffold platforms on self-supported scaffold systems for the storage of material are prohibited. The first tie-in must be at the height equal to 4 times the width of the smallest dimension of the scaffold base.

i. Scaffolding other than suspended types must bear on base plates upon wood mudsills (2 in x 10 in x 8 in minimum) or other adequate firm foundation.

j. Scaffold or work platform erectors must have fall protection during the erection and dismantling of scaffolding or work platforms that are more than 6 feet.

k. Delineate fall protection requirements when working above 6 feet or above dangerous operations in the Fall Protection and Prevention (FP&P) Plan and Activity Hazard Analysis (AHA) for the phase of work.

3.5.2 Elevated Aerial Work Platforms (AWPs)

Workers must be anchored to the basket or bucket in accordance with manufacturer's specifications and instructions (anchoring to the boom may only be used when allowed by the manufacturer and permitted by the CP). Lanyards used must be sufficiently short to prohibit worker from climbing out of basket. The climbing of rails is prohibited. Lanyards with built-in shock absorbers are acceptable. Self-retracting devices are not acceptable. Tying off to an adjacent pole or structure is not permitted unless a safe device for 100 percent tie-off is used for the transfer.

Use of AWPs must be operated, inspected, and maintained as specified in the operating manual for the equipment and delineated in the AHA. Operators of AWPs must be designated as qualified operators by the Prime Contractor. Maintain proof of qualifications on site for review and include in the AHA.

3.6 EQUIPMENT

3.6.1 Material Handling Equipment (MHE)

a. Material handling equipment such as forklifts must not be modified with work platform attachments for supporting employees unless specifically delineated in the manufacturer's printed operating instructions. Material handling equipment fitted with personnel work platform attachments are prohibited from traveling or positioning while personnel are working on the platform.

b. The use of hooks on equipment for lifting of material must be in accordance with manufacturer's printed instructions. Material Handling Equipment Operators must be trained in accordance with OSHA 29 CFR 1910, Subpart N.

c. Operators of forklifts or power industrial trucks must be licensed in accordance with OSHA.

3.6.2 Load Handling Equipment (LHE)

a. Equip cranes and derricks as specified in EM 385-1-1, Section 16.

b. Notify the Contracting Officer 15 working days in advance of any LHE entering the activity, in accordance with EM 385-1-1, Section 16.A.02, so that necessary quality assurance spot checks can be coordinated. Contractor's operator must remain with the crane during the spot check. Rigging gear must comply with OSHA, ASME B30.9 Standards safety standards.

c. Comply with the LHE manufacturer's specifications and limitations for erection and operation of cranes and hoists used in support of the work. Perform erection under the supervision of a designated person (as defined in ASME B30.5). Perform all testing in accordance with the manufacturer's recommended procedures.

d. Comply with ASME B30.5 for mobile and locomotive cranes, ASME B30.22 for articulating boom cranes, ASME B30.3 for construction tower cranes, ASME B30.8 for floating cranes and floating derricks, ASME B30.9 for slings, ASME B30.20 for below the hook lifting devices and ASME B30.26 for rigging hardware.

e. Under no circumstance must a Contractor make a lift at or above 90 percent of the cranes rated capacity in any configuration.

f. When operating in the vicinity of overhead transmission lines, operators and riggers must be alert to this special hazard and follow the requirements of EM 385-1-1 Section 11, and ASME B30.5 or ASME B30.22 as applicable.

g. Do not use crane suspended personnel work platforms (baskets) unless the Contractor proves that using any other access to the work location would provide a greater hazard to the workers or is impossible. Do not lift personnel with a line hoist or friction crane. Additionally, submit a specific AHA for this work to the Contracting Officer. Ensure the activity and AHA are thoroughly reviewed by all involved personnel.

h. Inspect, maintain, and recharge portable fire extinguishers as specified in NFPA 10, Standard for Portable Fire Extinguishers.

i. All employees must keep clear of loads about to be lifted and of suspended loads.

j. Use cribbing when performing lifts on outriggers.

k. The crane hook/block must be positioned directly over the load. Side loading of the crane is prohibited.

l. A physical barricade must be positioned to prevent personnel access where accessible areas of the LHE's rotating superstructure poses a risk of striking, pinching or crushing personnel.

m. Maintain inspection records in accordance by EM 385-1-1, Section 16.D, including shift, monthly, and annual inspections, the signature of the person performing the inspection, and the serial number or other

identifier of the LHE that was inspected. Records must be available for review by the Contracting Officer.

n. Maintain written reports of operational and load testing in accordance with EM 385-1-1, Section 16.F, listing the load test procedures used along with any repairs or alterations performed on the LHE. Reports must be available for review by the Contracting Officer.

o. Certify that all LHE operators have been trained in proper use of all safety devices (e.g. anti-two block devices).

p. Take steps to ensure that wind speed does not contribute to loss of control of the load during lifting operations. At wind speeds greater than 20 mph, the operator, rigger and lift supervisor must cease all crane operations, evaluate conditions and determine if the lift may proceed. Base the determination to proceed or not on wind calculations per the manufacturer and a reduction in LHE rated capacity if applicable. Include this maximum wind speed determination as part of the activity hazard analysis plan for that operation.

3.6.3 Machinery and Mechanized Equipment

a. Proof of qualifications for operator must be kept on the project site for review.

b. Manufacture specifications or owner's manual for the equipment must be on-site and reviewed for additional safety precautions or requirements that are sometimes not identified by OSHA or USACE EM 385-1-1. Incorporate such additional safety precautions or requirements into the AHAs.

3.6.4 USE OF EXPLOSIVES

Explosives must not be used or brought to the project site without prior written approval from the Contracting Officer. Such approval does not relieve the Contractor of responsibility for injury to persons or for damage to property due to blasting operations.

Storage of explosives, when permitted on Government property, must be only where directed and in approved storage facilities. These facilities must be kept locked at all times except for inspection, delivery, and withdrawal of explosives.

3.7 EXCAVATIONS

Soil classification must be performed by a competent person in accordance with 29 CFR 1926 and EM 385-1-1.

3.7.1 Utility Locations

Provide a third party, independent, private utility locating company to positively identify underground utilities in the work area in addition to any station locating service and coordinated with the station utility department.

3.7.2 Utility Location Verification

Physically verify underground utility locations, including utility depth,

by hand digging using wood or fiberglass handled tools when any adjacent construction work is expected to come within 3 feet of the underground system.

3.7.3 Utilities Within and Under Concrete, Bituminous Asphalt, and Other Impervious Surfaces

Utilities located within and under concrete slabs or pier structures, bridges, parking areas, and the like, are extremely difficult to identify. Whenever contract work involves chipping, saw cutting, or core drilling through concrete, bituminous asphalt or other impervious surfaces, the existing utility location must be coordinated with station utility departments in addition to location and depth verification by a third party, independent, private locating company. The third party, independent, private locating company must locate utility depth by use of Ground Penetrating Radar (GPR), X-ray, bore scope, or ultrasound prior to the start of demolition and construction. Outages to isolate utility systems must be used in circumstances where utilities are unable to be positively identified. The use of historical drawings does not alleviate the Contractor from meeting this requirement.

3.8 ELECTRICAL

Perform electrical work in accordance with EM 385-1-1, Appendix A, Sections 11 and 12.

3.8.1 Conduct of Electrical Work

As delineated in EM 385-1-1, electrical work is to be conducted in a de-energized state unless there is no alternative method for accomplishing the work. In those cases obtain an energized work permit from the Contracting Officer. The energized work permit application must be accompanied by the AHA and a summary of why the equipment/circuit needs to be worked energized. Underground electrical spaces must be certified safe for entry before entering to conduct work. Cables that will be cut must be positively identified and de-energized prior to performing each cut. Attach temporary grounds in accordance with ASTM F855 and IEEE 1048. Perform all high voltage cable cutting remotely using hydraulic cutting tool. When racking in or live switching of circuit breakers, no additional person other than the switch operator is allowed in the space during the actual operation. Plan so that work near energized parts is minimized to the fullest extent possible. Use of electrical outages clear of any energized electrical sources is the preferred method.

When working in energized substations, only qualified electrical workers are permitted to enter. When work requires work near energized circuits as defined by NFPA 70, high voltage personnel must use personal protective equipment that includes, as a minimum, electrical hard hat, safety shoes, insulating gloves and electrical arc flash protection for personnel as required by NFPA 70E. Insulating blankets, hearing protection, and switching suits may also be required, depending on the specific job and as delineated in the Contractor's AHA. Ensure that each employee is familiar with and complies with these procedures and 29 CFR 1910.147.

3.8.2 Qualifications

Electrical work must be performed by QP personnel with verifiable credentials who are familiar with applicable code requirements. Verifiable credentials consist of State, National and Local Certifications or Licenses

that a Master or Journeyman Electrician may hold, depending on work being performed, and must be identified in the appropriate AHA. Journeyman/Apprentice ratio must be in accordance with State, Local requirements applicable to where work is being performed.

3.8.3 Arc Flash

Conduct a hazard analysis/arc flash hazard analysis whenever work on or near energized parts greater than 50 volts is necessary, in accordance with NFPA 70E.

All personnel entering the identified arc flash protection boundary must be QPs and properly trained in NFPA 70E requirements and procedures. Unless permitted by NFPA 70E, no Unqualified Person is permitted to approach nearer than the Limited Approach Boundary of energized conductors and circuit parts. Training must be administered by an electrically qualified source and documented.

3.8.4 Grounding

Ground electrical circuits, equipment and enclosures in accordance with NFPA 70 and IEEE C2 to provide a permanent, continuous and effective path to ground unless otherwise noted by EM 385-1-1.

Check grounding circuits to ensure that the circuit between the ground and a grounded power conductor has a resistance low enough to permit sufficient current flow to allow the fuse or circuit breaker to interrupt the current.

3.8.5 Testing

Temporary electrical distribution systems and devices must be inspected, tested and found acceptable for Ground-Fault Circuit Interrupter (GFCI) protection, polarity, ground continuity, and ground resistance before initial use, before use after modification and at least monthly. Monthly inspections and tests must be maintained for each temporary electrical distribution system, and signed by the electrical CP or QP.

-- End of Section --

SECTION 01 45 00.05 20

DESIGN AND CONSTRUCTION QUALITY CONTROL
11/11

PART 1 GENERAL

1.1 REFERENCES

The publications listed below form a part of this specification to the extent referenced. The publications are referred to in the text by the basic designation only.

ASTM INTERNATIONAL (ASTM)

ASTM E 329	(2011c) Agencies Engaged in the Testing and/or Inspection of Materials Used in Construction

U.S. ARMY CORPS OF ENGINEERS (USACE)

EM 385-1-1	(2008; Errata 1-2010; Changes 1-3 2010; Changes 4-6 2011) Safety and Health Requirements Manual

1.2 SUBMITTALS

The use of a "G" following a submittal indicates that a Government approval action is required. Submit the following in accordance with Section 01 33 10.05 20 DESIGN SUBMITTAL PROCEDURES and Section 01 33 00.05
20 CONSTRUCTION SUBMITTAL

PROCEDURES. SD-01

Preconstruction Submittals

Design Quality Control (DQC) Plan; G

Submit a DQC Plan prior to the Post Award Kickoff

Meeting. Construction Quality Control (CQC) Plan; G

Submit a Construction QC Plan prior to start of

construction. Commissioning Plan; G

Submit a Commissioning Plan within 60 days of approval of CxAuthority.

SD-05 Design Data

Design Quality Control Documentation; G

SD-07 Certificates

Preliminary Inspections and Final Acceptance Testing; G Final Life Safety/Fire

IBC Special Inspections Certification; G

SD-11 Closeout Submittals

Summary Commissioning Report; G

1.3 QC PROGRAM REQUIREMENTS

Establish and maintain a QC program that is administered by a Design and Construction Quality Control organization, using Quality Control (Design and Construction) Plans, Commissioning Plans and Reports, meetings, a Coordination and Mutual Understanding Meeting, three phases of control, submittal review and approval, testing, completion inspections, and QC certifications and documentation necessary to provide design, materials, equipment, workmanship, fabrication, construction and operations which comply with the requirements of this Contract. The QC program shall cover on-site and off-site work. No construction work or testing may be performed unless the QC Manager is on the work site.

1.3.1 QC Plan Meeting

Prior to submission of the QC Plan, the QC Manager may request a meeting with the Contracting Officer to discuss the QC Plan requirements of this Contract.

The purpose of this meeting is to develop a mutual understanding of the QC Plan requirements prior to plan development and submission and to agree on the Contractor's list of Definable Features of Work (DFOWs).

1.3.2 Mutual Understanding Meeting

The purpose of this meeting is to develop a mutual understanding of the QC Plans, including documentation, administration, requirements & procedures, coordination of activities to be performed, and the coordination of the contractor's management, production and QC personnel. At the meeting, the contractor will explain in detail how the three phases of quality control will be implemented for each DFOW.

1.3.3 Design and Construction Quality Control Plans

The Contractor shall provide a project specific Design Quality Control (DQC) Plan and Construction Quality Control (CQC) Plan, for review and approval by the Contracting Officer. The Contractor shall perform no design until the DQC Plan is approved and no construction until the CQC Plan is approved. The Contractor's plans shall include the following:

a. The QC organization for this contract, including member resumes.

b. Aletter from an officer of the company designating the QC Manager, Alternate QC Manager, DQC Manager, Commissioning Authority, and their authority.

c. QC Manager qualifications.

d. DQC Manager qualifications.

e. List of DFOW including list of design submittal packaging. DFOW is a task that is separate and distinct from other tasks and has control requirements and work crews unique to the task.

f. For the CQC Plan, a plan to implement the "Three Phases of Control" for each DFOW.

g. For the CQC Plan, a testing Plan, log and list of personnel and accredited laboratories that will perform tests. Construction materials testing laboratories must be accredited by a laboratory accreditation authority and will be required to submit a copy of the Certificate of Accreditation and Scope of Accreditation with the testing plan. Coordinate this testing Plan with the Commissioning Plan verification testing requirements to avoid duplication of effort.

h. Submittal Register including design submittals, listing personnel who will review submittals and noting submittals for Contracting Officer review.

i. Procedures for submitting and reviewing design changes/ variations prior to submission to the Contracting Officer.

j. As a part of the Contractor's CQC plan, a statement of Special Inspections shall be prepared by the Designer of Record (DOR) describing a complete list of materials and work requiring special inspections, the inspections to be performed and any applicable quality assurance plans and structural observations. The Contractor's plan shall implement the applicable requirements of the International Building Code (IBC), Chapter 17 "Structural Tests and Special Inspections." The plan shall include a listing of the individuals, approved agencies or firms that will be retained for conducting the required special inspections accompanied by a description of individual inspector's experience and a copy of all required certifications. Structural tests and special inspections, as outlined in Chapter 17 of the IBC, shall be conducted by individuals and agents that are under the direct supervision of a Registered Design Professional (RDP) and meet the requirements of ASTM E 329.

k. As part of the Contractor's DQC plan, a statement of Life Safety and Fire Protection Features Inspections and Testing shall be prepared by the Fire Protection Designer of Record. Examples of life safety and fire protection features include, but are not limited to, water distribution systems including fire pumps and fire hydrants, fire resistive assemblies such as fire rated walls/partitions, through -penetration firestop systems, spray-applied fire proofing of structural components, fire alarm and detection systems, fire suppression and standpipe systems, means of egress components, emergency and exit lighting fixtures. The plan will include a listing of the individuals, approved agencies or firms that will be retained for conducting the required inspections and tests accompanied by a description of individual inspector's experience and a copy of all required certifications. Additional copies of this plan shall be submitted to the NAVFAC Fire Protection Engineer and the Installation Fire Chief. This plan shall include the following:

(1) Comprehensive list of systems, components or features to be inspected and tested.

(2) Description of performance verification testing activities for each system or component.

(3) Procedures and schedules for functional performance tests of all systems requiring functional testing.

l. For the DQC plan, submit a formal Communication Plan that indicates the frequency of design meetings and what information is covered in those meetings, key design decision points tied to the Network Analysis Schedule and how the DOR plans to include the Government in those decisions, peer review procedures, interdisciplinary coordination, design review procedures, comment resolution, etc.

The Communication Plan will emphasize key decisions and possible problems the Contractor and Government may encounter during the design phase of the project. Provide a plan to discuss design alternatives and design coordination with the stakeholders at the key decision points as they arise on the project. Identify individual stakeholders and suggested communication methods that will be employed to expedite and facilitate each anticipated critical decision. Communication methods may include: Concept Design Workshop, over-the-shoulder review meetings, presentation at client's office, lifecycle cost analysis presentation, technical phone conversation, and formal review meeting. The design portion of the Communication Plan must be written by the DQC Manager and confirmed during the Post Award Kick off Partnering.
Update the Communication Plan at every Partnering meeting.

m. For the DQC Plan, procedures for insuring the design documents are submitted in accordance with UFC 1-300-09N, Design Procedures and other procedures to ensure disciplines have been properly coordinated to eliminate conflicts.

n. For the DQC Plan, provide Quality Control Documentation procedures such as QC review sets and QC comments to demonstrate that cross

checking of all engineering disciple's design drawings and specifications has taken place. The QC review documentation shall exhibit a checking process of the design documents for completeness, accuracy, and constructability.

o. For the DQC Plan, a list of design subcontractors and the scope of the work which each firm will accomplish.

1.3.4 Commissioning Plan

The Contractor shall provide a project specific Commissioning Plan for review and acceptance by the Contracting Officer. The intent of the commissioning plan is to expose all critical issues and resolve them with input from the construction team at early stages of planning. Develop and submit the Commissioning Plan to define the on-site activities and roles and responsibilities for commissioning all building systems required by the Project Program paragraph entitled, Building Commissioning. The Commissioning Plan shall be updated as information changes during the project. The Plan shall include the following:

a. Commissioning Authority qualifications and experience.

b. A description of the Commissioning Team's roles and responsibilities as well as organizational relationships with the Contractor's QC Manager, DQC Manager, and verification and testing personnel.

c. A listing of all systems required to be commissioned, include a list of required instruments and components for measurements, verifications, and full commissioning of mechanical systems.

d. A description of the testing and acceptance method used for each system. Describe all commissioning process activities. Include the sequence and schedule for starting and balancing air distribution systems to ensure construction materials, such as architectural finishes, are installed under the appropriate environmental conditions. Also address the procedure that will be used to "dry out" the structure.

e. A procedures and schedule for functional performance tests of all systems to be commissioned. The Commissioning Authority shall be present for all functional performance tests. Coordinate this schedule with the QC Plan testing requirements to avoid duplication of effort.

f. Coordinate with eOMSI Preparer to approve the training plan, content of the facility maintenance and operational training, and training schedule for Government personnel. Provide training sessions on performance of the systems that were commissioned.

1.3.5 Summary Commissioning Report

The Commissioning Authority shall provide a Summary Commissioning Report upon completion of the performance verification items. The Summary Commissioning Report shall include the following:

a. Executive Summary of the commissioning process including results and observations of the commissioning program.

b. A history of deficiencies identified and their resolution. Indicate outstanding issues to be resolved.

c. Commissioned systems performance test results and evaluations. Provide a 72 hour data trend utilizing the building automation system. Verify that the trend data reflects proper operation of the system.

1.4 QC ORGANIZATION

The QC Manager shall manage the QC organization and shall report to an officer of the firm and shall not be subordinate to the Project Superintendent or the Project Manager.

1.4.1 QC and Alternate QC Manager

QC and Alternate QC Manager qualifications:

a. Complete the course entitled "Construction Quality Management (CQM) for Contractors." and maintain a current certificate.The QC Manager that does not have a current certification must obtain the CQM for Contractors course certification within 90 days of award. This course is periodically offered by the Naval Facilities Engineering Command and the Army Corps of Engineers. Contact the Contracting Officer for class schedule information.

b. Familiar with requirements of USACE EM 385-1-1, and experience in the areas of hazard identification and safety compliance.

c. Five years of combined experience as a Superintendent, QC Manager, Project Manager, or Project Engineer on similar size and type construction contracts, and at least two years experience as a QC Manager.

QC and Alternate QC Manager responsibilities:

a. Participate in the Post Award Kick-off, Partnering, Preconstruction, Design Development, and Coordination and Mutual Understanding Meetings.

b. Implement the "Three Phase of Control" plan for each DFOW and notify the Contracting Officer at least 3 business days in advance of each Preparatory and Initial Phase meeting. Submit respective checklists to the Contracting Officer the next business day.

c. Ensure that no construction begins before the DOR has finalized the design for that segment of work, and construction submittals are approved as required.

d. Inspect all work and rework, using International Conference of Building Officials certified QC specialists as applicable, to ensure its compliance with contract requirements. Maintain a rework log.

e. Immediately stop any segment of work, which does not comply with the contract requirements and direct the removal and replacement of any defective work.

f. Remove any individual from the site who fails to perform their work in a skillful, safe and workmanlike manner or whose work does not comply with the contract plans and specifications.

g. Prepare daily QC Reports.

h. Provide daily photographic documentation to support the work reported in the Daily Reports. Maintain a file of CD/ DVD disks at the job site that assemble the photographs supporting the daily reports. Organize the supporting photographs into searchable files organized by date and under each date organize the photographs in

folders for each definable features of work. Indicate on the disk label and disk holder the date range of pictures contained on each disk. Provide a date stamp on each picture and title each picture with a description of location and viewed components.Provide .jpeg color photograph files that are 300 DPI - printable at 8 inch by 10 inch size.

Photograph construction related to existing work to be covered by contract modifications and required rework as follows;

1) View of as-is conditions prior to modification/ rework.

2) View of as-is conditions with existing exterior enclosure and interior finishes removed before modification/ new work begins.

3) View of new/ modified construction prior to being covered by exterior enclosure and interior finishes.

4) View of completed new/ modified construction.

i. Ensure that Contractor Production Reports are prepared daily.

j. Hold weekly QC meetings with the DQC Manager, Commissioning Authority, DOR (or representative), Superintendent and the Contracting Officer; participation shall be suitable for the phase of work. Distribute minutes of these meetings.

k. Ensure that design and construction submittals are reviewed and approved, as required by the contract, prior to allowing material on site and work to proceed with these items. Maintain a submittal register.

l. Update As-built drawings daily, maintaining up-to-date set on site.

m. Maintain a testing plan and log. Ensure that all testing is performed in accordance with the contract. Review all test reports and notify the Contracting Officer of all deficiencies, along with a proposal for corrective action.

n. Maintain rework log on site, noting dates deficiency identified, and date corrected.

o. Certify and sign statement on each invoice that all work to be paid under the invoice has been completed in accordance with contract requirements.

p. Perform Punch-out and participate in Pre-final and Final acceptance Inspections. Submit list of deficiencies to the Contracting Officer for each inspection. Correct all deficiencies prior to the Final inspection. Notify Contracting Officer prior to final inspection to establish a schedule date acceptable by the Contracting Officer.

q. Ensure that all required keys, operation and maintenance manuals, warranty certificates, and the As-built drawings are correct and complete, in accordance with the contract, and submitted to the Contracting Officer.

r. Assure that all applicable tests, special inspections, and observations required by the contract are performed.

s. Coordinate all factory and on-site testing, Testing Laboratory personnel, QC Specialists, and any other inspection and testing personnel required by this Contract.

t. Notify the Contracting Officer of any proposed changes to the QC plan.

u. Retain a copy of approved submittals at project site, including Contractor's copy of approved samples.

v. Update the Performance Assessment Plan as described in the UFGS section 01 31 19.05 20, Post Award Meetings and discuss monthly at a QC meeting.

1.4.2 DQC Manager

The DQC Manager shall be a member of the QC organization, shall coordinate actions with the QC Manager, and shall not be subordinate to the Project Superintendent or the Project Manager. The DQC Manager may also act as the Commissioning Authority if all Commissioning Authority qualifications are met.

DQC Manager qualifications:

a. Aminimum of 5 years experience as a design Architect or Engineer on similar size and type designs /or design-build contracts. Provide education, experience, and management capabilities on similar size and type contracts.

b. Be a registered professional engineer or architect with an active registration. Provide proof of registration as part of the resume submittal package.

c. Complete the course entitled "Construction Quality Management (CQM) for Contractors."

DQC Manager responsibilities:

a. Be responsible for the design integrity, professional design standards, and all design services required.

b. Be a member of the Designer of Record's (DOR) firm.

c. Be responsible for development of the design portion of the QC Plan, incorporation and maintenance of the approved Design Schedule, and the preparation of DQC Reports and minutes of all design meetings.

d. Participate in the Post Award Kick-Off, all design planning meetings, design presentations, partnering, and QC meetings.

e. Implement the DQC plan and shall remain on staff involved with the project until completion of the project.

f. Be cognizant of and assure that all design documents on the project have been developed in accordance with the Contract.

g. Provide Design Quality Control Documentation (DQCD) which indicates design coordination of the engineering disciplines. Submit DQCD with the prefinal and final design submittals as required in UFGS 01 33
10.05 20, Design Submittal Procedures.

h. Develop the submittal register. Coordinate with each DOR to determine what items need to be submitted, and who needs to approve.

i. Provide QC certification for design compliance.

j. Certify and sign statement on each invoice that all work to be paid to the DOR under the invoice has been completed in accordance with the contract requirements.

k. Prepare weekly DQC Reports that documents the work the design team accomplished that week.

l. Coordinate all training requirements with the QC and the eOMSI Preparer.

1.4.3 Commissioning Authority

Commissioning Authority

qualifications:

The Commissioning Authority shall be procured by the government.

Commissioning Authority responsibilities:

a. Be responsible for development of the Commissioning Plan, the Summary Commissioning Report, and minutes of all commissioning meetings.

b. Participate in the Post Award Kick-Off, all design planning meetings, design presentations, partnering, and QC meetings.

c. Review the Request for Proposal (RFP) for energy and sustainability goals, system expectations, O&M requirements, training expectations, and construction quality expectations.

d. Review the Basis of Design and ensure the RFP requirements are met.

e. Ensure commissioning requirements are incorporated into the construction documents.

f. Assure the electrical requirements of the actual equipment supplied by the mechanical contractor are verified, reviewed and coordinated with the electrical and other trades.

g. Be responsible for implementation and updating of the Commissioning Plan.

h. Be responsible for development of systems functional testing procedures.

i. Ensure pre-functional installation inspections are performed on all systems indicated to be commissioned in accordance with the Commissioning Plan and Contract documents.

j. Verify systems performance of all systems indicated to be commissioned in accordance with the Commissioning Plan and Contract documents.

k. Report any deficiencies in installation, general performance, operation, and functional performance of all systems indicated to be commissioned.

l. Participate in the eOMSI Field Validation to assure the accuracy of the eOMSI Data and eOMSI Document information prior to the submission of the Final eOMSI submittal.

m. Coordinate training of Government maintenance personnel with the eOMSI Preparer to assure training materials and training classes are accurate and provide instruction and documentation on critical elements of the products, materials, and systems in the constructed facility. Verify that the Government's operating personnel were trained on the infomation necessary to operate the facility.

1.4.4 QC Specialists

QC Specialists shall assist and report to the QC Manager and may perform production related duties but must be allowed sufficient time to perform their assigned quality control duties. QC Specialists are required to attend the Coordination and Mutual Understanding Meeting, QC meetings and be physically present at the construction site to perform the three phases of control and prepare documentation for each definable feature of work in their area of responsibility at the frequency specified below.

1.4.4.1 Fire Protection QC Specialist

The Fire Protection QC Specialist (FPQC) shall be a U.S.Registered Professional Engineer and shall be an integral part of the Prime Contractor's Quality Control Organization. This FPQC shall have no business relationships (owner, partner, operating officer, distributor, salesman, or technical representative) with any fire protection equipment device manufacturers, suppliers or installers for any such equipment provided as part of this project. The Fire Protection Designer of Record may serve as the lead Fire Protection QC Specialist,

provided the following qualifications are met.

a. Qualifications/Experience: The FPQC shall have obtained their professional registration by successfully completing the Fire Protection Engineering discipline examination. This FPQC shall have a minimum of 5 years full time and exclusive experience in every aspect of facility design and construction as it relates to fire protection,

which includes, but is not limited to, building code analysis, life safety code analysis, design of automatic detection and suppression systems, passive fire protection design, water supply analysis, and a multi-discipline coordination reviews, and construction surveillance.

b. Area of Responsibility: The FPQC is responsible for assuring the proper construction and installation of life safety and fire protection features across all disciplines and trades. The FPQC shall be responsible for assuring that life safety and fire protection features are provided in accordance with the design documents, approved construction submittals, and manufacturer's requirements. Examples include, but are not limited to, water distribution systems including fire pumps and fire hydrants, fire resistive assemblies such as spray-applied fire proofing of structural components and fire rated walls/partitions, fire alarm and detection systems, fire suppression and standpipe systems, emergency and exit lighting fixtures, etc.

c. Construction Surveillance: The FPQC is responsible for reviewing and implementing the QC Plan developed by the Fire Protection DOR. The FPQC shall visit the construction site as necessary to ensure life safety and fire protection systems are being constructed, applied, and installed in accordance with the approved design documents, approved construction submittals, and manufacturer's requirements. Frequency and duration of the field visits are dependent upon particular system components, system complexity, and phase of construction. At a minimum, field visits shall occur just prior to installation of suspended ceiling systems to inspect the integrity of passive fire protection features and fire suppression system piping, and required performance verification testing of all life safety and fire protection systems identified below and in Part 4.

(1) Preliminary Inspections and Final Acceptance Testing: FPQC shall personally witness all preliminary inspections of fire alarm/detection and suppression systems. Once preliminary inspections have been successfully completed, the FPQC shall submit a signed certificate to the QC Manager that systems are ready for final inspection and testing.

The Naval Facilities Engineering Command Fire Protection Engineer will witness formal tests and approve all systems before they are accepted. The QC Manager shall submit the request for formal inspection at least 15 days prior to the date the inspection is to take place. The QC manager shall provide 10 days advance notice to the Contracting Officer and the activity Fire Inspection Office of scheduled final inspections.

d. QC Documentation and Certifications: The following documentation and certification shall be prepared by the FPQC. Additional copies shall be submitted to the NAVFAC Fire Protection Engineer and the

Installation Fire Chief.

(1) Field visit reports. Submit reports documenting all field visits and summarizing all findings.

(2) Inspection and Test reports and certificates. Submit in accordance with the applicable codes, standards, and this RFP.

(3) Final Life Safety/Fire Protection Certification. The FPQC shall provide certification that all life safety and fire protection systems have been inspected and in the FPQC's professional judgment,; have been installed in accordance with the contract documents, approved submittals, and manufacturer's requirements. This certification shall summarize all

life safety and fire protection features, and shall bear the professional seal of the fire protection engineer.

1.4.4.2 Mechanical QC Specialist

Provide IBC Special Inspections Certification from the following specialist(s):

Qualification/ Experience in Area of Responsibility	Area of Responsibility	Frequency
Mechanical Inspector, International Conference of Building Officals(ICBO) Certified/ 5 years minimum	Installation and Testing of Boilers	Minimum 3 times a weekduring installation and full-time during testing
Certified Elevator Inspector, certified by an organization accredited by ASME/ 5 years minimum	Pretesting to ensure safety code, specification, and building code complience; provide testing verification report prior to beginning final acceptance test	Once every two weeks during instalation, full time during Pretesting
Registered Mechanical Engineer (PE)/ QC Specialist	Testing of Installed mechanical systems	Full time during testing

1.4.4.3 Soils Testing/Pile Installation and Testing QC Specialists

Provide IBC Special Inspections Certification from the following specialist(s):

Qualification/ Experience in Area of Responsibility	Area of Responsibility	Frequency
Engineer or under the supervision of an Engineer	Soil testing Pile Installation and Testing	As required in IBC Chapter 17

1.4.4.4 Structural QC Specialists

Provide IBC Special Inspections Certification from the following specialist(s):

Qualification/ Experience in Area of Responsibility	Area of Responsibility	Frequency
Engineer or under the supervision of an Engineer	Structural Steel and Bolting Inspector and/or Structural Welding Inspector	Once a week during installation and full time during testing

1.4.4.5 Building Envelope QC Specialist

Provide IBC Special Inspections Certification from the following specialist(s):

Qualification/ Experience in Area of Responsibility	Area of Responsibility	Frequency
Roofing Manufacturer's Technical Representative/ 5 years minimum with roofing system used.	Installation and testing of roofing	Once a week during installation, two times a week during flashing installation and full time during roof testing.

1.5 THREE PHASES OF CONTROL

The Three Phases of Control shall adequately cover both on-site and off-site work and shall include the following for each DFOW.

1.5.1 Preparatory Phase

Notify the Contracting Officer at least two work days in advance of each preparatory phase meeting. The meeting shall be conducted by the QC Manager and attended by the Project Superintendent, QC Specialists, and the foreman responsible for the DFOW. The DQC Manager shall also attend if required by structural tests and special inspections, as outlined in Chapter 17 of the IBC and the DQC Plan. When the DFOW will be accomplished by a subcontractor, that subcontractor's foreman shall

attend the preparatory phase meeting. Document the results of the preparatory phase actions in the daily Contractor Quality Control Report and in the Preparatory Phase Checklist. Perform the following prior to beginning work on each DFOW:

a. Review each paragraph of the applicable specification sections;

b. Review the Contract drawings;

c. Verify that appropriate shop drawings and submittals for materials and equipment have been submitted and approved.Verify receipt of approved factory test results, when required;

d. Review the testing plan and ensure that provisions have been made to provide the required QC testing;

e. Examine the work area to ensure that the required preliminary work has been completed;

f. Examine the required materials, equipment and sample work to ensure that they are on hand and conform to the approved shop drawings and submitted data;

g. Discuss the specific controls used in construction methods, construction tolerances, workmanship standards, and the approach that will be used to provide quality construction by planning ahead and identifying potential problems for each DFOW; and

h. Review the APP and appropriate Activity Hazard Analysis (AHA) to ensure that applicable safety requirements are met, and that required Material Safety Data Sheets (MSDS) are submitted.

1.5.2 Initial Phase

Notify the Contracting Officer at least two work days in advance of each initial phase. When construction crews are ready to start work on a DFOW, conduct the initial phase with the Project Superintendent, QC Specialists, and the foreman responsible for that DFOW. The DQC Manager shall also attend if required by structural tests and special inspections, as outlined in Chapter 17 of the IBC and the DQC Plan. Observe the initial segment of the DFOW to ensure that the work complies with Contract requirements. Document the results of the initial phase in the daily CQC Report and in Initial Phase Checklist. Repeat the initial phase for each new crew to work on-site, or when acceptable levels of specified quality are not being met. Perform the following for each DFOW:

a. Establish the quality of workmanship required;

b. Resolve conflicts;

c. Ensure that testing is performed by the approved laboratory, and

d. Check work procedures for compliance with the APP and the appropriate AHA to ensure that applicable safety requirements are met.

e. Ensure manufacturer's representative has performed necessary inspections, if required.

1.5.3 Follow-Up Phase

Perform the following for on-going work daily, or more frequently as necessary, until the completion of each DFOW and document in the daily CQC Report:

a. Ensure the work is in compliance with Contract requirements;

b. Maintain the quality of workmanship required;

c. Ensure that testing is performed by the approved laboratory; and

d. Ensure that rework items are being corrected.

1.5.4 Additional Preparatory and Initial Phases

Additional preparatory and initial phases shall be conducted on the same DFOW if the quality of on-going work is unacceptable, if there are changes in the applicable QC organization, if there are changes in the on-site production supervision or work crew, if work on a DFOW is resumed after substantial period of inactivity, or if other problems develop.

1.5.5 Notification of Three Phases of Control for Off-Site Work

Notify the Contracting Officer at least two weeks prior to the start of the preparatory and initial phases.

1.6 COMPLETION INSPECTIONS

The Contractor shall perform the necessary punchout, prefinal, and final inspections, compile punchlists, and correct deficiencies.

1.6.1 Punch-Out Inspection

Near the completion of all work or any increment thereof, established by a completion time stated in the Contract Clause entitled "Commencement, Prosecution, and Completion of Work," or stated elsewhere in the specifications, the QC Manager and the CA must conduct an inspection of the work and develop a "punch list" of items which do not conform to the approved drawings, specifications and Contract. Include in the punch list any remaining items on the "Rework Items List", which were not corrected prior to the Punch-Out Inspection. Include within the punch list the estimated date by which the deficiencies will be corrected. Provide a copy of the punch list to the Contracting Officer. The QC Manager, or staff, must make follow-on inspections to ascertain that all deficiencies have been corrected. Once this is accomplished, notify the Contracting Officer that the facility is ready for the Government "Pre-Final Inspection".

1.6.2 Pre-Final Inspection

Near the completion of all work or any increment thereof, established by a completion time stated in the Contract Clause entitled "Commencement, Prosecution, and Completion of Work," or stated elsewhere in the

specifications, the QC Manager and the CA must conduct an inspection of the work and develop a "punch list" of items which do not conform to the approved drawings, specifications and Contract. Include in the punch list any remaining items on the "Rework Items List", which were not corrected prior to the Punch-Out Inspection. Include within the punch list the estimated date by which the deficiencies will be corrected. Provide a copy of the punch list to the Contracting Officer. The QC Manager, or staff, must make follow-on inspections to ascertain that all deficiencies have been corrected. Once this is accomplished, notify the Contracting Officer that the facility is ready for the Government "Pre-Final Inspection".

1.6.3 Final Acceptance Inspection

Notify the Contracting Officer at least 14 calendar days prior to the date a final acceptance inspection can be held. State within the notice that all items previously identified on the pre-final punch list will be corrected and acceptable, along with any other unfinished Contract work, by the date of the final acceptance inspection. The Contractor must be represented by the QC Manager, the Project Superintendent, the CA, and others deemed necessary. Attendees for the Government will include the Contracting Officer, other FEAD/ROICC personnel, and personnel representing the Client. Failure of the Contractor to have all contract work acceptably complete for this inspection will because for the Contracting Officer to bill the Contractor for the Government's additional inspection cost in accordance with the Contract Clause entitled "Inspection of Construction."

1.7 DOCUMENTATION

Maintain current and complete records of on-site and off-site QC program operations and activities.

PART 2 PRODUCTS

Not used.

PART 3 EXECUTION

Not used.

-- End of Section --

SECTION 01 50 00.05 20

TEMPORARY FACILITIES AND CONTROLS FOR DESIGN-BUILD
11/07

PART 1 GENERAL

1.1 REFERENCES

The publications listed below form a part of this specification to the extent referenced. The publications are referred to within the text by the basic designation only.

AMERICAN WATER WORKS ASSOCIATION (AWWA)

AWWA C511	(1997) Reduced-Pressure Principle Backflow Prevention Assembly

FOUNDATION FOR CROSS-CONNECTION CONTROL AND HYDRAULIC RESEARCH (FCCCHR)

FCCCHR List	(continuously updated) List of Approved Backflow Prevention Assemblies
FCCCHR Manual	(9th Edition) Manual of Cross-Connection Control

NATIONAL FIRE PROTECTION ASSOCIATION (NFPA)

NFPA 241	(2009) Standard for Safeguarding Construction, Alteration, and Demolition Operations
NFPA 70	(2011; TIA 11-1; Errata 2011) National Electrical Code

U.S. FEDERAL HIGHWAY ADMINISTRATION (FHWA)

MUTCD	(2009) Manual on Uniform Traffic Control Devices for Streets and Highways

U.S. NATIONAL ARCHIVES AND RECORDS ADMINISTRATION (NARA)

40 CFR 247	Comprehensive Procurement Guideline for Products Containing Recovered Materials

1.2 SUBMITTALS

The use of a "G" following a submittal indicates that a Government approval action is required. Submit the following in accordance with Section 01 33 10.05 20 DESIGN SUBMITTAL PROCEDURES and Section 01 33 00.05 20 CONSTRUCTION SUBMITTAL PROCEDURES. SD-01 Preconstruction Submittals

Traffic control plan; G

Construction site plan; G

SD-03 Product Data

Backflow

preventers

SD-06 Test Reports

Backflow Preventer Tests; G

Backflow Preventers Certificate of Full Approval

1.3 EPA LISTED ITEMS USED IN CONDUCT OF THE WORK BUT NOT INCORPORATED IN THE WORK

There are many products listed in 40 CFR 247 which have been designated or proposed by EPA to include recycled or recovered materials that may be used by the Contractor in performing the work but will not be incorporated into the work. These products include office products, temporary traffic control products, and pallets. These non-construction products contain the highest practicable percentage of recycled or recovered materials and can be recycled when no longer needed.

1.4 CONSTRUCTION SITE PLAN

Prior to the start of work, submit a site plan showing the locations of temporary facilities (including layouts and details, equipment and material storage area (onsite and offsite), and access and haul routes used for this contract. Show locations of safety and construction fences, site trailers, construction entrances, trash dumpsters, temporary sanitary facilities, and worker parking areas.

1.5 BACKFLOW PREVENTERS CERTIFICATE

Certificate of Full Approval from FCCCHR List, University of Southern California, attesting that the design, size and make of each backflow preventer has satisfactorily passed the complete sequence of performance testing and evaluation for the respective level of approval. Certificate of Provisional Approval will not be acceptable.

1.5.1 Backflow Prevention Training Certificate

The Contractor shall submit a certificate recognized by the State or local authority that states the Contractor has completed at least 10

hours of training in backflow preventer installations. The certificate must be
current.

1.6 TEMPORARY UTILITIES

1.6.1 Utilities at Special Locations

Reasonable amounts of utilities will be made available to the Contractor at the prevailing Government rates. These rates may be obtained upon application to the Commanding Officer, JEBLCFS, by way of the Contracting Officer. The Contractor will be responsible for making connections, providing transformers and meters, and making disconnections; and for providing backflow preventer devices on connections to domestic water lines.

1.7 STATION OPERATION AFFECT ON CONTRACTOR OPERATIONS

1.7.1 Special Restrictions Regarding Access of Vehicles and Parking

1.7.1.1 Interruption of Vehicular Traffic

If during the performance of work, it becomes necessary to modify vehicular traffic patterns at any locations, notify the Contracting Officer at least 15 calendar days prior to the proposed modification date, and provide a Traffic Control Plan detailing the proposed controls to traffic movement for approval. The plan shall be in accordance with State and local regulations and the MUTCD 2009. Make all notifications and obtain any permits required for modification to traffic movements outside Station's jurisdiction. Provide cones, signs, barricades, lights, or other traffic control devices and personnel required to control traffic.
Do not use foil-backed material for temporary pavement marking because of its potential to conduct electricity during accidents involving downed power lines.

1.8 STORAGE AREAS

Contractor shall be responsible for security of his property. The Contract Clause entitled "FAR 52.236-10, Operations and Storage Areas" and the following apply:

1.8.1 Storage in Existing Buildings

The Contractor shall be working in and around existing buildings; the storage of material will not be allowed in the buildings. Provide 8 foot high security fence with a lockable gate around the storage area. Remove at the completion of work.

1.9 TEMPORARY SANITARY FACILITIES

Provide adequate sanitary conveniences of a type approved for the use of persons employed on the work, properly secluded from public observation, and maintained in such a manner as required and approved by the Contracting Officer. Maintain these conveniences at all times without nuisance. Upon completion of the work, remove the conveniences from the

premises, leaving the premises clean and free from nuisance. Dispose of sewage through connection to a municipal, district, or station sanitary sewage system. Where such systems are not available, use chemical toilets or comparably effective units, and periodically empty wastes into a municipal, district, or station sanitary sewage system, or remove waste to

a commercial facility. Include provisions for pest control and elimination of odors.

Provide temporary sewer and sanitation facilities that are self-contained units with both urinals and stool capabilities. Ventilate the units to control odors and fumes and empty and clean them at least once a week or more often if required by the Contracting Officer. The doors shall be self-closing. The exterior of the unit shall match the base standard color. Locate the facility behind the construction fence or out of the public view.

1.10 TEMPORARY BUILDINGS

Temporary facilities (including trailers) shall be in like new condition and shall be maintained throughout the project. Locate these facilities where directed and within the indicated operations area. Failure to maintain storage trailers or buildings to these standards shall result in the removal of non-complying units at the Contractor's expense. A sign not smaller than 24 by 24 inches shall be conspicuously placed on the trailer depicting the company name, business phone number, and emergency phone number. Trailers shall be anchored to resist high winds and must meet applicable state of local standards for anchoring mobile trailers. Storage of material/debris under such facilities is prohibited. Contractor shall be responsible for the security of the stored property.

1.10.1 Maintenance of Temporary Facilities

Suitably paint and maintain the temporary facilities. Failure to do so will be sufficient reason to require their removal.

1.10.2 Quality Control Manager Records and Field Office

Provide on the jobsite an office with approximately 100 square feet of useful floor area for the exclusive use of the QC Manager. Provide a weathertight structure with adequate heating and cooling, toilet facilities, lighting, ventilation, a 4 by 8 foot plan table, a standard size office desk and chair, computer station, and working communications facilities. Provide a door with a cylinder lock and windows with locking hardware. Make utility connections. Locate as directed. File quality control records in the office and make available at all times to the Government. After completion of the work, remove the entire structure from the site.

PART 2 PRODUCTS

2.1 BACKFLOW PREVENTERS

Reduced pressure principle type conforming to the applicable requirements AWWA C511. Provide backflow preventers complete with

150 pound flanged bronze, mounted gate valve and strainer, 304 stainless steel or bronze, internal parts. The particular make, model/design, and size of backflow preventers to be installed shall be included in the latest edition of the List of Approved Backflow Prevention Assemblies issued by the FCCCHR List and shall be accompanied by a Certificate of Full Approval from FCCCHR List.

2.2 PROJECT SIGN

Prior to initiating any work on site, provide one project identification sign at the location coordinated with the Contracting Officer. Construct the sign in accordance with project sign detail attached at the end of this section. Maintain sign throughout the life of the project. Upon completion of the project, remove the sign from the site.

2.2.1 Project Identification Signboard (Navy)

A project identification signboard shall be provided in accordance with attached Plates 1, 3, 4, 5 and 6). The signboard shall be provided at a conspicuous location on the job site where directed by the Contracting Officer.

a. The field of the sign shall consist of a minimum of 4 by 8 foot) sheet of exterior plywood.

b. The entire signboard and supports shall be painted. The lettering and sign work shall be performed by a skilled sign painter using paint known in the trade as bulletin colors. The colors, lettering sizes, and lettering styles shall be as indicated.

c. NAVFAC logo shall be a sticker/decal with either transparent or white background or paint the logo by stencil onto the sign. The weather resistant sticker/decal film shall be rated for a minimum of 2-year exterior vertical exposure. NAVFAC Logo is available at: https://portal.navfac.navy.mil/portal/page?_pageid=181,3465071&_dad=portal&_schema=PORTAL

d. Sign paint colors

(1) Blue = To match dark blue color in the NAVFAC logo.

(2) White = To match Brilliant White color in the NAVFAC logo.

e. Final signboard artwork (rendering) may be either mounted under plexiglass as indicated in attached Plates 2, or at the Contractor's option may be electrostatically printed on self-adhering, weather resistant, glossy vinyl film and mounted to signboard. Provide film that is capable of full color reproduction of the building rendering and is rated for a minimum of 2 years exterior vertical exposure.

PART 3 EXECUTION

3.1 TEMPORARY PHYSICAL CONTROLS

3.1.1 Access Controls

3.1.1.1 Temporary Barricades

Contractor shall provide for barricading around all work areas to prevent public access.

3.1.1.2 Fencing

Fencing shall be provided along the construction site at all open excavations and tunnels to control access by unauthorized people. Fencing must be installed to be able to restrain a force of at least 250 pounds against it.

In addition, prior to the start of work, enclose those areas at the construction site which are not within the construction fence with a temporary safety fence, including gates and warning signs, to protect the public from construction activities. The safety fence shall match the base standard color (or bright orange where it protects excavated areas), shall be made of high density polyethylene grid or approved equal, a minimum of 42 inches high, supported and tightly secured to steel posts located on minimum 10 foot centers. Remove the fence from the work site upon completion of the contract.

3.1.1.3 Signs

Place warning signs at the construction area perimeter designating the presence of construction hazards requiring unauthorized persons to keep out. Signs must be placed on all sides of the project, with at least one sign every 300 feet. All points of entry shall have signs designating the construction site as a hard hat area.

3.1.1.4 Traffic Work

All work around/involving roadways, to include roadway excavations and utility crossings, will be conducted in accordance with Manual of Traffic Control Devices. Contractors shall provide and ensure appropriate road closure and detour signs are established as necessary for motor traffic management. All road closures shall be coordinated with the Contracting Officer in advance. Self-illuminated (lighted) barricades shall be provided during hours of darkness. Brightly-colored (orange) vests are required for all personnel working in roadways. Road closures shall require a road closure plan showing the location of signage.

3.2 TEMPORARY WIRING

Provide temporary wiring in accordance with NFPA 241 and NFPA 70, Assured Equipment Grounding Conductor Program. Program shall include frequent inspection of all equipment and apparatus.

3.3 REDUCED PRESSURE BACKFLOW PREVENTERS

Provide an approved reduced pressure backflow prevention assembly at each location where the Contractor taps into the Government potable water supply.

A certified tester(s) shall perform testing of backflow preventer(s) for proper installation and operation and provide subsequent tagging. Backflow preventer tests shall be performed using test equipment,

procedures, and certification forms conforming to those outlined in the latest edition of the Manual of Cross-Connection Control published by the FCCCHR Manual. Test and tag each reduced pressure backflow preventer upon initial installation (prior to continued water use) and quarterly thereafter. Tag shall contain the following information: make, model, serial number, dates of tests, results, maintenance performed, and signature of tester. Record test results on certification forms conforming to requirements cited earlier in this paragraph.

3.4 GRASS CUTTING

Cut grass (or annual weeds) within the construction and storage sites to a maximum 4 inch height at least once a week during the growing season unless the grass area is not visible to the public. Trim the grass around fences at time of grass cutting.

-- End of Section --

VERIFY W/ CONTRACTING OFFICER IF PROJECT IS AN ARRA PROJECT. FOR ARRA PROJECTS, ADD SIGNAGE AT TOP OF SIGN. SEE PLATES 8 AND 9 FOR SIGNAGE AND DETAILS.

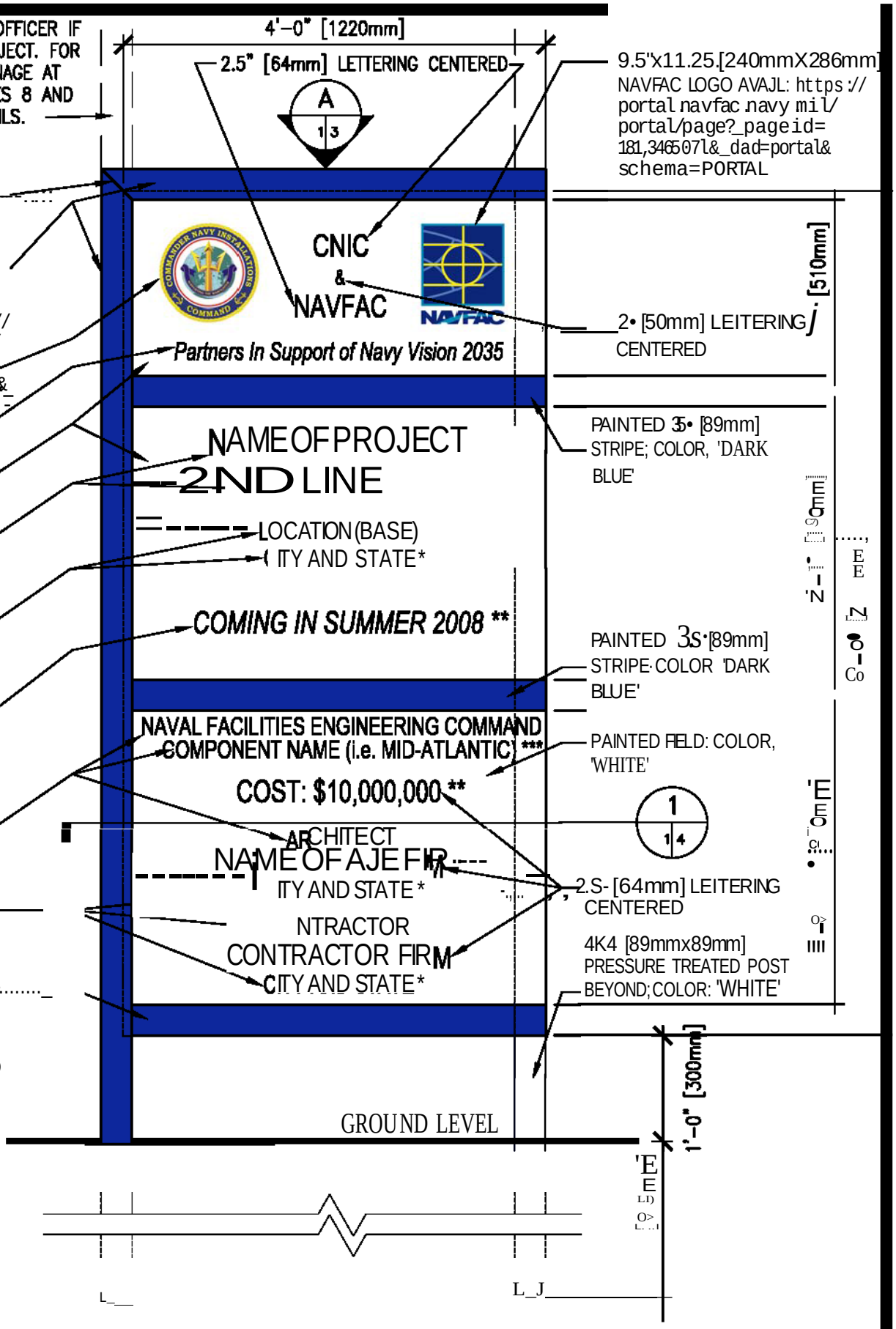

NOTES:
1. PAINT ALL OTHER WOOD SURFACES WITH ONE COAT EXT. PRIMER AND IWO COATS GLOSS WHITE ENAMEL
2. AU. LETTERING SHAU. BE EVENLY SPACED.
3. LEITER S1YLE, 'ARIAL', COLOR 'DARK BLUE'. TYPICAL FOR ALL LEITERING.

*-ABBREVIATE STATE
.:-CONFIRM USE WITH CONTRACTING OFFICER
***-VERIFY NAME WITH CONTRACTING OFFICER.

PROJECT IDENTIFICATION SIGNBOARD

SCALE: 3/4" = 1'-0"

PLATE 1

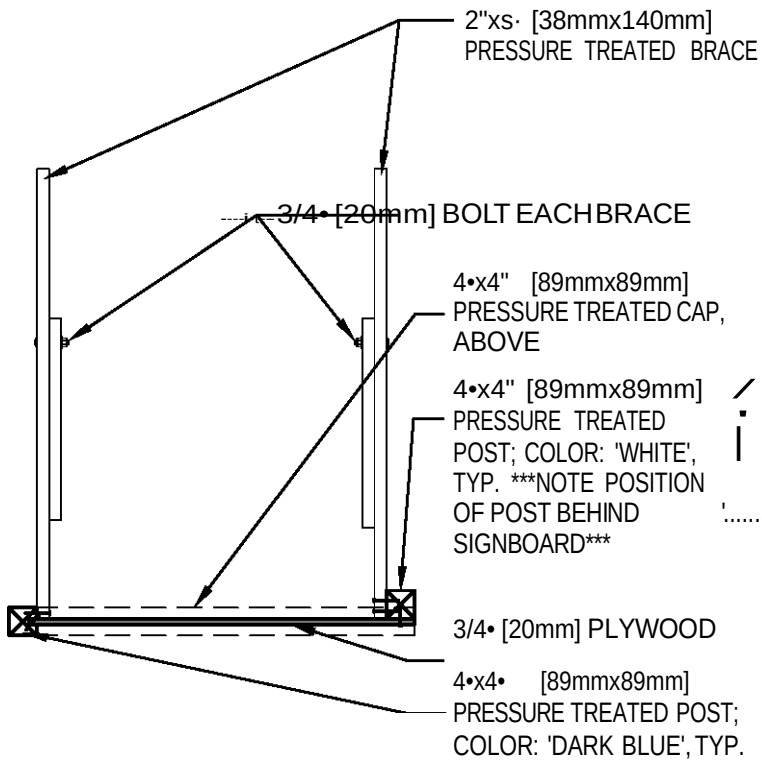

A 1,2 3 TOP VIEW

SCALE: 1/2" = 1'-0"

fillIES;.

1. POSTS AND BRACES SHALL BE PRESSURE TREATED.
2. ALL FASTENERS SHALL BE ZINC COATED.
3. BRACING IS REQUIRED IN ALL SOIL CONDITIONS AND HIGH WIND ENVIRONMENTS.

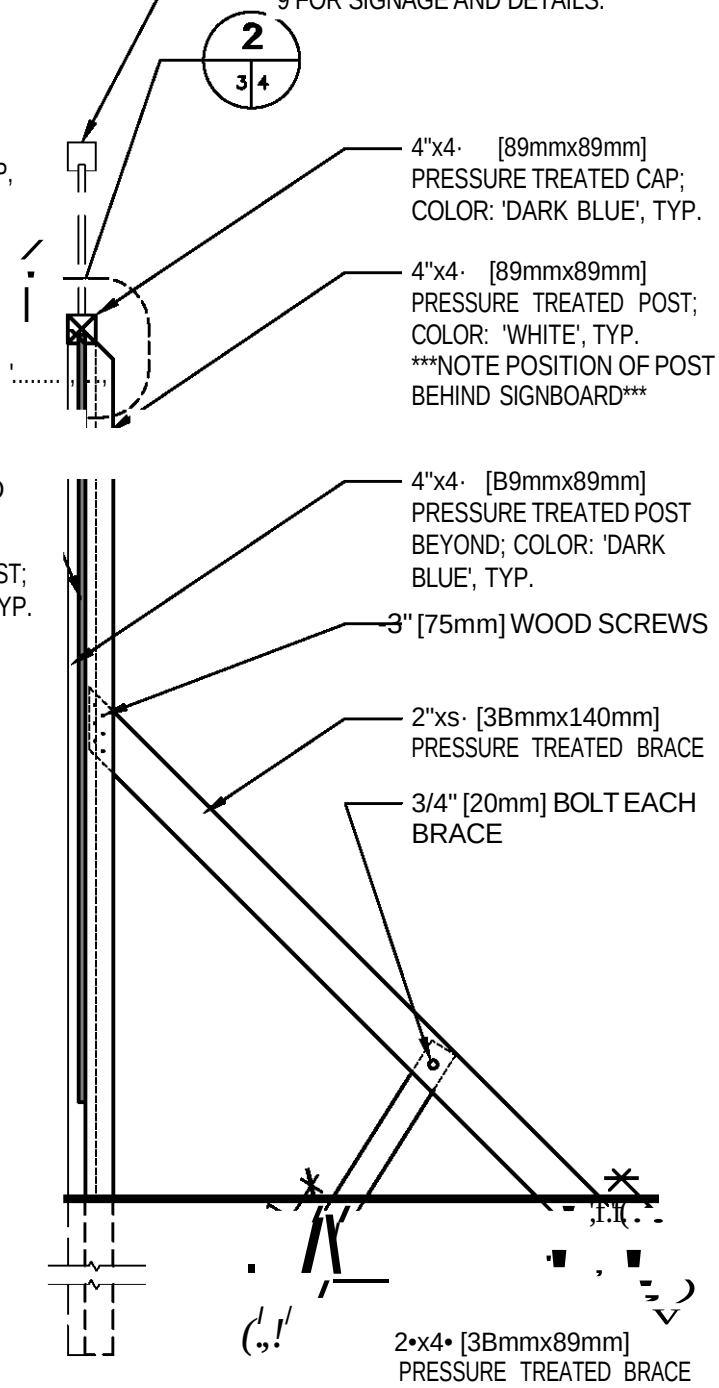

B 1,2 3 SIDE VIEW

SCALE: 1/2" = 1'-0"

PROJECT IDENTIFICATION SIGNBOARD SUPPORT DETAILS

PLATE 3

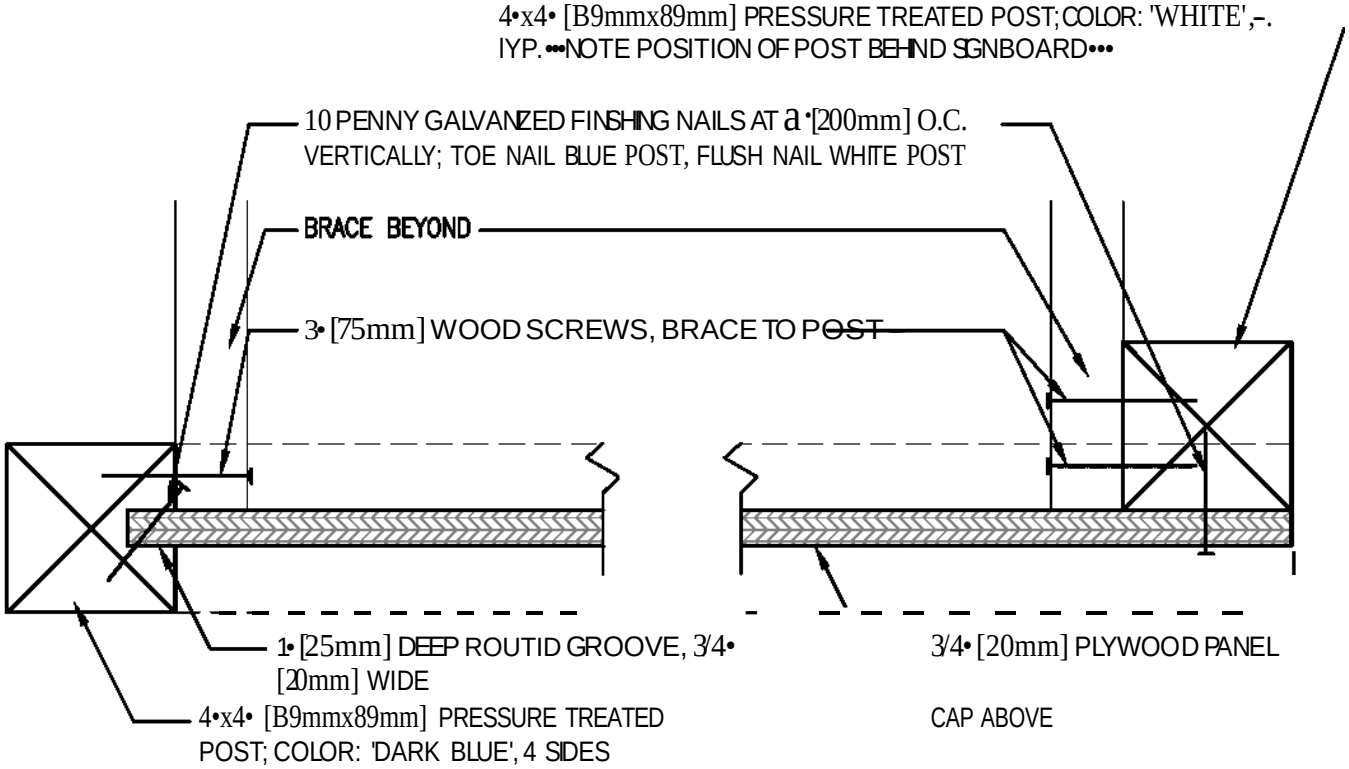

1 PLAN SECTION

1,2 | 4

SCALE: 3" = 1'-0

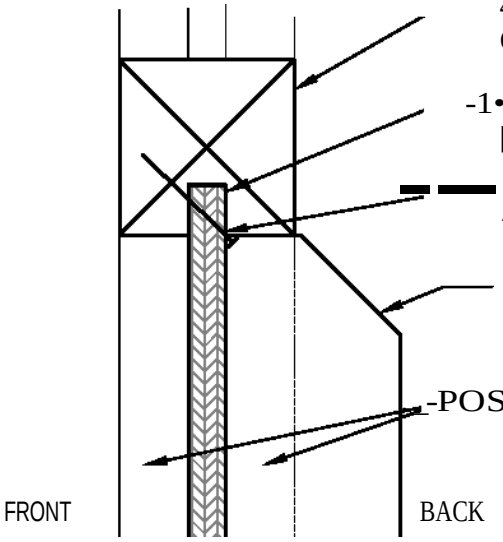

2 SECTION AT TOP

1,2 | 4

SCALE: 3" = 1'-0"

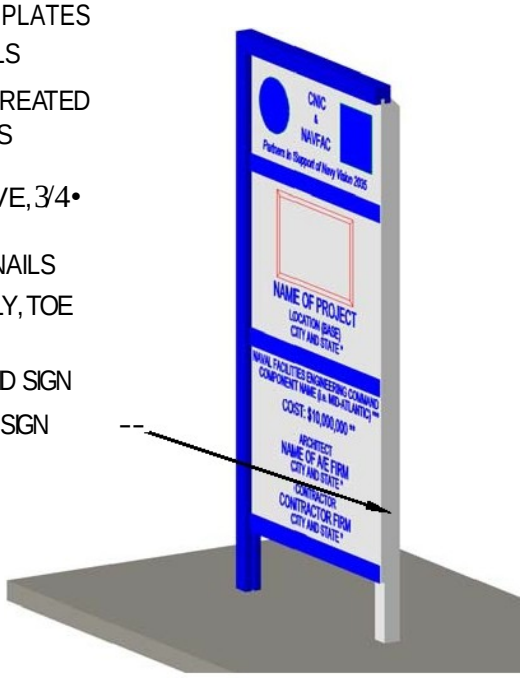

3 ISO VIEW

2 | 4

SCALE: NONE

PROJECT IDENTIFICATION SIGNBOARD SECTIONS

PLATE 4

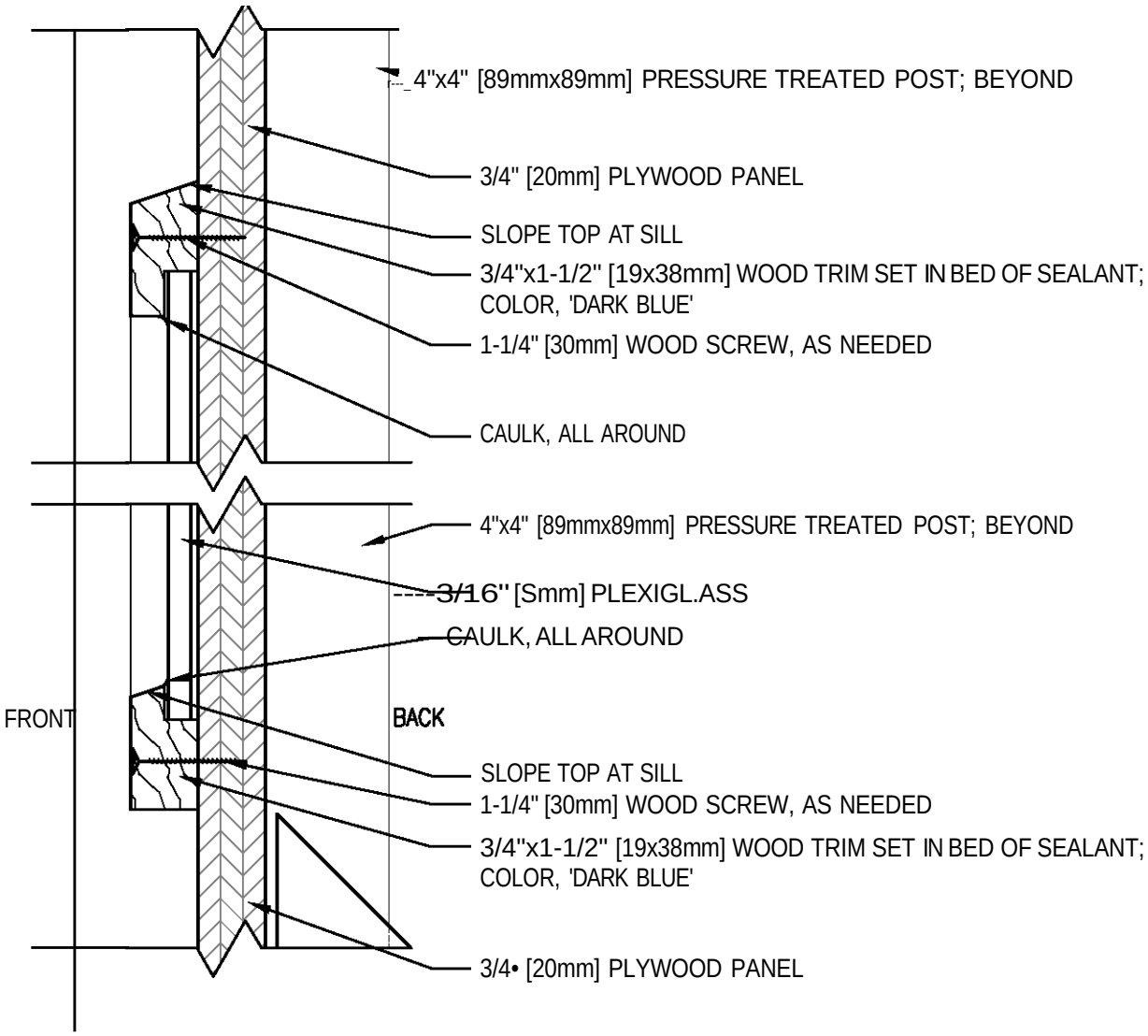

3 / 2 5

SECTION AT RENDERING FRAME

SCALE: 6" = 1'-0"

PROJECT IDENTIFICATION SIGNBOARD SECTION

PLATE 5

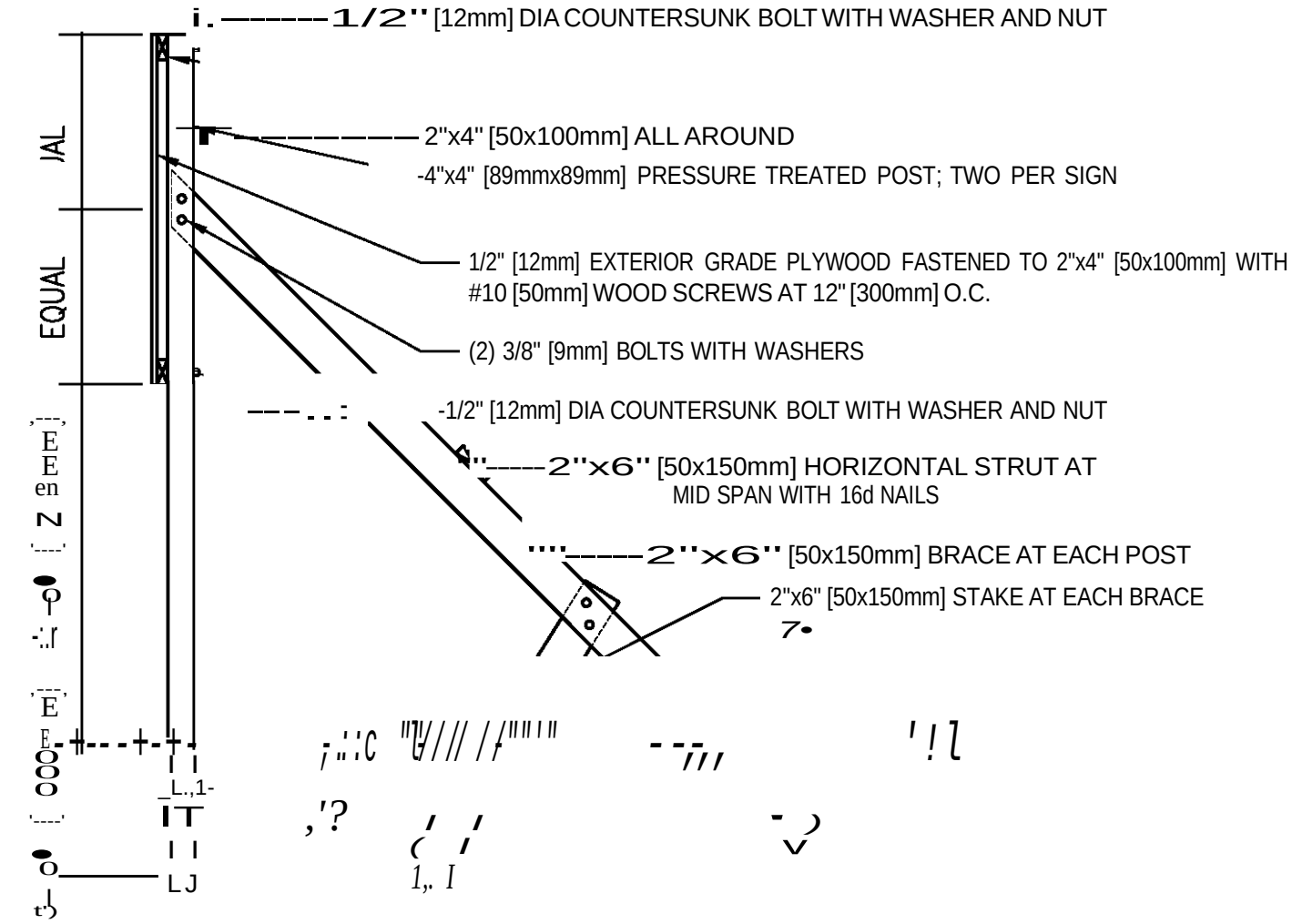

A 6 6

SECTION

SCALE: 1/2" = 1'-0"

NOTES:

1. THE SIGN MUST BE CONSTRUCTED OF 4'x8' [1200mmx2400mm] 1/2" [12mm] GRADE A-C, EXTERIOR IYPE PLYWOOD MOUNTED ON A FRAME OF TREATED LUMBER.
2. THE HOST Mi\JCOM WILL PROVIDE SIGN COLORS AND DETAILS TO THE DESIGN MANAGER IN THE REQUIREMENTS AND MANAGEMENT PLAN (RAIMP).
3. ALL LETTERING SHALL BE UPPERCASE HELVETICA MEDIUM.
4. PRESERVATIVE TREAT ALL WOOD SURFACES BURIED OR IN CONTACT WITH THE EARTH.
5. ALL FASTENERS SHALL BE GALVANIZED COATED.
6. LUMBER SHALL BE NON STRESS GRADE: Ft = 8.5^5 KGS/M^2 (1200PSI)6
   Ft = 10.5^5 KGS/M^2 (1500PSI)

7. THE ENTIRE SIGNBOARD AND SUPPORTS SHALL BE GIVEN ONE COAT OF EXTERIOR ALKYD PRIMER AND TWO COATS OF EXTERIOR ALKYD ENAIMEL PAINT. THE LETTERING AND SIGN WORK SHALL BE PERFORMED BY A SKILLED SIGN PAINTER USING PAINT KNOWN IN THE TRADE AS BULLETIN COLORS. WHERE PRESERVATIVE-TREATED LUMBER IS REQUIRED, UTILIZE ONLY CURED PRESSURE-TREATED WOOD WHICH HAS HAD THE CHEMICALS LEACHED FROM THE SURFACE OF THE WOOD PRIOR TO PAINTING.

PROJECT IDENTIFICATION - U.S. AIR FORCE PROJECTS

PLATE S

SECTION 01 57 19.00 20

TEMPORARY ENVIRONMENTAL CONTROLS

11/11

PART 1 GENERAL

1.1 REFERENCES

The publications listed below form a part of this specification to the extent referenced. The publications are referred to within the text by the basic designation only.

U.S. ENVIRONMENTAL PROTECTION AGENCY (EPA)

EPA 833-R-060-04	(2007) Developing Your Storm Water Pollution Prevention Plan, a Guide for Construction Sites

U.S. NATIONAL ARCHIVES AND RECORDS ADMINISTRATION (NARA)

29 CFR 1910.120	Hazardous Waste Operations and Emergency Response
40 CFR 112	Oil Pollution Prevention
40 CFR 112.7	General Requirements for Spill Prevention, Control, and Countermeasure Plans
40 CFR 122.26	Storm Water Discharges (Applicable to State NPDES Programs, see section 123.25)
40 CFR 241	Guidelines for Disposal of Solid Waste
40 CFR 243	Guidelines for the Storage and Collection of Residential, Commercial, and Institutional Solid Waste
40 CFR 258	Subtitle D Landfill Requirements
40 CFR 260	Hazardous Waste Management System: General
40 CFR 261	Identification and Listing of Hazardous Waste
40 CFR 262	Standards Applicable to Generators of Hazardous Waste
40 CFR 263	Standards Applicable to Transporters of Hazardous Waste

40 CFR 264	Standards for Owners and Operators of Hazardous Waste Treatment, Storage, and Disposal Facilities
40 CFR 265	Interim Status Standards for Owners and Operators of Hazardous Waste Treatment,

	Storage, and Disposal Facilities
40 CFR 266	Standards for the Management of Specific Hazardous Wastes and Specific Types of Hazardous Waste Management Facilities
40 CFR 268	Land Disposal Restrictions
40 CFR 270	EPA Administered Permit Programs: The Hazardous Waste Permit Program
40 CFR 271	Requirements for Authorization of State Hazardous Waste Programs
40 CFR 272	Approved State Hazardous Waste Management Programs
40 CFR 273	Standards For Universal Waste Management
40 CFR 279	Standards for the Management of Used Oil
40 CFR 280	Technical Standards and Corrective Action Requirements for Owners and Operators of Underground Storage Tanks (UST)
40 CFR 300	National Oil and Hazardous Substances Pollution Contingency Plan
40 CFR 355	Emergency Planning and Notification
40 CFR 372-SUBPART D	Specific Toxic Chemical Listings
40 CFR 761	Polychlorinated Biphenyls (PCBs) Manufacturing, Processing, Distribution in Commerce, and Use Prohibitions
49 CFR 171	General Information, Regulations, and Definitions
49 CFR 172	Hazardous Materials Table, Special Provisions, Hazardous Materials Communications, Emergency Response Information, and Training Requirements
49 CFR 173	Shippers - General Requirements for Shipments and Packagings
49 CFR 178	Specifications for Packagings

1.2 DEFINITIONS

1.2.1 Sediment

Soil and other debris that have eroded and have been transported by runoff water or wind.

1.2.2 Solid Waste

Garbage, refuse, debris, sludge, or other discharged material, including solid, liquid, semisolid, or contained gaseous materials resulting from domestic, industrial, commercial, mining, or agricultural operations.
Types of solid waste typically generated at construction sites may include:

a. Green waste: The vegetative matter from landscaping, land clearing and grubbing, including, but not limited to, grass, bushes, scrubs, small trees and saplings, tree stumps and plant roots. Marketable trees, grasses and plants that are indicated to remain, be re-located, or be re-used are not included.

b. Surplus soil: Existing soil that is in excess of what is required for this work, including aggregates intended, but not used, for on-site mixing of concrete, mortars and paving. Contaminated soil meeting the definition of hazardous material or hazardous waste is not included.

c. Debris: Non-hazardous solid material generated during the construction, demolition, or renovation of a structure which exceeds
2.5 inch particle size that is: a manufactured object; plant or animal matter; or natural geologic material (e.g. cobbles and boulders), broken or removed concrete, masonry, and rock asphalt paving; ceramics; roofing paper and shingles. Inert materials may not be reinforced with or contain ferrous wire, rods, accessories and weldments. A mixture of debris and other material such as soil or sludge is also subject to regulation as debris if the mixture is comprised primarily of debris by volume, based on visual inspection.

d. Wood: Dimension and non-dimension lumber, plywood, chipboard, hardboard. Treated and/or painted wood that meets the definition of lead contaminated or lead based contaminated paint is not included.

e. Scrap metal: Scrap and excess ferrous and non-ferrous metals such as reinforcing steel, structural shapes, pipe and wire that are recovered or collected and disposed of as scrap. Scrap metal meeting the definition of hazardous material or hazardous waste is not included.

f. Paint cans: Metal cans that are empty of paints, solvents, thinners and adhesives. If permitted by the paint can label, a thin dry film may remain in the can.

g. Recyclables: Materials, equipment and assemblies such as doors, windows, door and window frames, plumbing fixtures, glazing and mirrors that are recovered and sold as recyclable. Metal meeting the definition of lead contaminated or lead based paint contaminated may not be included as recyclable if sold to a scrap metal company. Paint cans may not be included as recyclable if sold to a scrap metal company.

h. Hazardous Waste: By definition, to be a hazardous waste a material must first meet the definition of a solid waste. Hazardous waste

and hazardous debris are special cases of solid waste. They have additional regulatory controls and must be handled separately. They are thus defined separately in this document.

Material not regulated as solid waste are: nuclear source or byproduct materials regulated under the Federal Atomic Energy Act of 1954 as amended; suspended or dissolved materials in domestic sewage effluent or irrigation return flows, or other regulated point source discharges; regulated air emissions; and fluids or wastes associated with natural gas or crude oil exploration or production.

1.2.3 Hazardous Debris

As defined in Solid Waste paragraph, debris that contains listed hazardous waste (either on the debris surface, or in its interstices, such as pore structure) per 40 CFR 261; or debris that exhibits a characteristic of hazardous waste per 40 CFR 261.

1.2.4 Chemical Wastes

This includes salts, acids, alkalizes, herbicides, pesticides, and organic chemicals.

1.2.5 Garbage

Refuse and scraps resulting from preparation, cooking, dispensing, and consumption of food.

1.2.6 Hazardous Waste

Any discarded material, liquid, solid, or gas, which meets the definition of hazardous material or is designated hazardous waste by the Environmental Protection Agency or State Hazardous Control Authority as defined in 40 CFR 260, 40 CFR 261, 40 CFR 262, 40 CFR 263, 40 CFR 264,
40 CFR 265, 40 CFR 266, 40 CFR 268, 40 CFR 270, 40 CFR 271, 40 CFR 272, 40 CFR 273, 40 CFR 279, and 40 CFR 280.

1.2.7 Hazardous Materials

Hazardous materials as defined in 49 CFR 171 and listed in 49 CFR 172.

Hazardous material is any material that:

a. Is regulated as a hazardous material per 49 CFR 173, or

b. Requires a Material Safety Data Sheet (MSDS) per 29 CFR 1910.120, or

c. During end use, treatment, handling, packaging, storage, transpiration, or disposal meets or has components that meet or have potential to meet the definition of a hazardous waste as defined by
40 CFR 261 Subparts A, B, C, or D.

Designation of a material by this definition, when separately regulated or controlled by other instructions or directives, does not eliminate the need for adherence to that hazard-specific guidance which takes precedence over this instruction for "control" purposes. Such material

include ammunition, weapons, explosive actuated devices, propellants, pyrotechnics, chemical and biological warfare materials, medical and pharmaceutical supplies, medical waste and infectious materials, bulk fuels, radioactive materials, and other materials such as asbestos, mercury, and polychlorinated biphenyls (PCBs). Nonetheless, the exposure may occur incident to manufacture, storage, use and demilitarization of these items.

1.2.8 Waste Hazardous Material (WHM)

Any waste material which because of its quantity, concentration, or physical, chemical, or infectious characteristics may pose a substantial hazard to human health or the environment and which has been so designated. Used oil not containing any hazardous waste, as defined

above, falls under this definition.

1.2.9 Oily Waste

Those materials which are, or were, mixed with used oil and have become separated from that used oil. Oily wastes also means materials, including wastewaters, centrifuge solids, filter residues or sludges, bottom sediments, tank bottoms, and sorbents which have come into contact with and have been contaminated by, used oil and may be appropriately tested and discarded in a manner which is in compliance with other State and local requirements.

This definition includes materials such as oily rags, "kitty litter" sorbent clay and organic sorbent material. These materials may be land filled provided that:

a. It is not prohibited in other State regulations or local ordinances

b. The amount generated is "de minimus" (a small amount)

c. It is the result of minor leaks or spills resulting from normal process operations

d. All free-flowing oil has been removed to the practical extent possible

Large quantities of this material, generated as a result of a major spill or in lieu of proper maintenance of the processing equipment, are a solid waste. As a solid waste, a hazardous waste determination must be performed prior to disposal. As this can be an expensive process, it is recommended that this type of waste be minimized through good housekeeping practices and employee education.

1.2.10 Regulated Waste

Those solid wastes that have specific additional Federal, state, or local controls for handling, storage, or disposal.

1.2.11 Class I and II Ozone Depleting Substance (ODS)

Class I ODS is defined in Section 602(a) of The Clean Air Act and includes the following chemicals:

chlorofluorocarbon-11 (CFC-11)
chlorofluorocarbon-12 (CFC-12)
chlorofluorocarbon-13 (CFC-13)
chlorofluorocarbon-111 (CFC-111)
chlorofluorocarbon-112 (CFC-112)
chlorofluorocarbon-113 (CFC-113)
chlorofluorocarbon-114 (CFC-114)

chlorofluorocarbon-115 (CFC-115)
chlorofluorocarbon-211 (CFC-211)
chlorofluorocarbon-212 (CFC-212)
chlorofluorocarbon-213 (CFC-213)
chlorofluorocarbon-214 (CFC-214)
chlorofluorocarbon-215 (CFC-215)
chlorofluorocarbon-216 (CFC-216)
chlorofluorocarbon-217 (CFC-217)
chlorofluorocarbon-500 (CFC-500)
chlorofluorocarbon-502 (CFC-502)
chlorofluorocarbon-503 (CFC-503)
halon-1211
halon-1301
halon-2402
carbon tetrachloride
methyl bromide
methyl chloroform

Class II ODS is defined in Section 602(s) of The Clean Air Act and includes the following chemicals:

hydrochlorofluorocarbon-21 (HCFC-21)

hydrochlorofluorocarbon-22 (HCFC-22)
hydrochlorofluorocarbon-31 (HCFC-31)
hydrochlorofluorocarbon-121 (HCFC-121)
hydrochlorofluorocarbon-122 (HCFC-122)
hydrochlorofluorocarbon-123 (HCFC-123)
hydrochlorofluorocarbon-124 (HCFC-124)
hydrochlorofluorocarbon-131 (HCFC-131)

hydrochlorofluorocarbon-132 (HCFC-132)
hydrochlorofluorocarbon-133 (HCFC-133)
hydrochlorofluorocarbon-141 (HCFC-141)
hydrochlorofluorocarbon-142 (HCFC-142)
hydrochlorofluorocarbon-221 (HCFC-221)
hydrochlorofluorocarbon-222 (HCFC-222)
hydrochlorofluorocarbon-223 (HCFC-223)
hydrochlorofluorocarbon-224 (HCFC-224)
hydrochlorofluorocarbon-225 (HCFC-225)
hydrochlorofluorocarbon-226 (HCFC-226)
hydrochlorofluorocarbon-231 (HCFC-231)
hydrochlorofluorocarbon-232 (HCFC-232)
hydrochlorofluorocarbon-233 (HCFC-233)
hydrochlorofluorocarbon-234 (HCFC-234)
hydrochlorofluorocarbon-235 (HCFC-235)
hydrochlorofluorocarbon-251 (HCFC-251)
hydrochlorofluorocarbon-252 (HCFC-252)
hydrochlorofluorocarbon-253 (HCFC-253)
hydrochlorofluorocarbon-261 (HCFC-261)
hydrochlorofluorocarbon-262 (HCFC-262)

hydrochlorofluorocarbon-271 (HCFC-271)

1.2.12 Universal Waste

The universal waste regulations streamline collection requirements for certain hazardous wastes in the following categories: batteries, pesticides, mercury-containing equipment (e.g., thermostats) and lamps (e.g., fluorescent bulbs). The rule is designed to reduce hazardous waste in the municipal solid waste (MSW) stream by making it easier for universal waste handlers to collect these items and send them for recycling or proper disposal. These regulations can be found at 40 CFR 273.

1.3 SUBMITTALS

Government approval is required for submittals with a "G" designation; submittals not having a "G" designation are for Contractor Quality Control

approval. The following shall be submitted in accordance with Section Section 01 33 10.05 20 DESIGN SUBMITTAL PROCEDURES and Section
01 33 00.05 20 CONSTRUCTION SUBMITTAL

PROCEDURES: SD-01 Preconstruction

Submittals

Preconstruction Survey; G

Solid Waste Management Plan and Permit; G

Regulatory Notifications; G

Environmental Protection Plan; G

Storm Water Pollution Prevention Plan; G

Storm Water Notice of Intent (for NPDES coverage under the general permit for construction activities); G

Dirt and Dust Control

Plan SD-06 Test Reports

Laboratory Analysis

Disposal Requirements

Erosion and Sediment Control Inspection Reports

Storm Water Inspection Reports for General Permit

Solid Waste Management Report; G

SD-07 Certificates

Contractor 40 CFR employee training records; G

ECATTS certificate of completion

SD-11 Closeout Submittals

Some of the records listed below are also required as part of other submittals. For the "Records" submittal, maintain on-site a separate three-ring Environmental Records binder and submit at the completion of the project. Make separate parts to the binder corresponding to each of the applicable sub items listed below.

Storm Water Pollution Prevention Plan compliance notebook; G

Waste Determination Documentation

Contractor 40 CFR Employee Training

Records Solid Waste Management Permit

Solid Waste Management Report

Hazardous Waste/Debris Management

Regulatory Notifications

1.4 ENVIRONMENTAL PROTECTION REQUIREMENTS

Provide and maintain, during the life of the contract, environmental protection as defined. Plan for and provide environmental protective measures to control pollution that develops during normal construction practice. Plan for and provide environmental protective measures required to correct conditions that develop during the construction of permanent or temporary environmental features associated with the project. Comply with Federal, State, and local regulations pertaining to the environment, including water, air, solid waste, hazardous waste and substances, oily substances, and noise pollution.

The Contractor may be required to promptly conduct tests and procedures for the purpose of assessing whether construction operations are in compliance with Applicable Environmental Laws. Analytical work shall be done by qualified laboratories; and where required by law, the laboratories shall be certified.

1.4.1 Environmental Compliance Assessment Training and Tracking System (ECATTS)

The QC Manager is responsible for environmental compliance on projects unless an Environmental Manager is named. The QC Manager (and alternative QC Manager) or Environmental Manager must complete ECATTS training prior to starting respective portions of on-site work under this contract. If personnel changes occur for any of these positions after starting work, replacement personnel must complete ECATTS training within 14 days of assignment to the project

Submit an ECATTS certificate of completion for personnel who have completed the required "Environmental Compliance Assessment Training and Tracking System (ECATTS)" training. This training is web-based and can be accessed from any computer with Internet access using the following

instructions.

Register for NAVFAC Environmental Compliance Training and Tracking System, by logging on to http://navfac.ecatts.com/. Obtain the password for registration from the Contracting Officer.

This training has been structured to allow contractor personnel to receive credit under this contract and also to carry forward credit to future contracts. Contractors shall ensure that the QC Manager (and alternate QC Manager) or Environmental Manager review their training plans for new modules or updated training requirements prior to beginning work. Some training modules are tailored for specific State regulatory requirements; therefore, Contractors working in multiple states will be requires to re-take modules tailored to the state where the contract work is being performed.

ECATTS is available for use by all contractor and subcontractor personnel associated with this project. These other personnel are encouraged (but not required) to take the training and may do so at their discretion.

1.4.2 Conformance with the Environmental Management System

Perform work under this contract consistent with the policy and objectives identified in the installation's Environmental Management System (EMS). Perform work in a manner that conforms to objectives and targets, environmental programs and operational controls identified by the EMS. Provide monitoring and measurement information as necessary to address environmental performance relative to environmental, energy, and transportation management goals. In the event an EMS nonconformance or environmental noncompliance associated with the contracted services, tasks, or actions occurs, take corrective and/or preventative actions. In addition, ensure that employees are aware of their roles and responsibilities under the EMS and how these EMS roles and responsibilities affect work performed under the contract.

Ensure that employees receive applicable environmental and occupational health and safety training, and keep up to date on regulatory required specific training for the type of work to be conducted onsite. All on-site Contractor personnel, and their subcontractor personnel, performing tasks that have the potential to cause a significant environmental impact shall be competent on the basis of appropriate education, training or experience. Upon contract award, the Contracting Officer's Representative will notify the installation's EMS coordinator to arrange EMS training. Refer to Section 01 57 19.01 20, SUPPLEMENTAL TEMPORARY ENVIRONMENTAL CONTROLS for additional site specific EMS requirements related to construction. The installation's EMS coordinator will identify training needs associated with environmental aspects and the EMS, and arrange training or take other action to meet these needs. Provide training documentation to the Contracting Officer. The EMS coordinator must retain associated records.

1.5 QUALITY ASSURANCE

1.5.1 Preconstruction Survey

Perform a Preconstruction Survey of the project site with the Contracting Officer, and take photographs showing existing environmental conditions in and adjacent to the site. Submit a report for the record.

1.5.2 Regulatory Notifications

The Contractor is responsible for all regulatory notification requirements in accordance with Federal, State and local regulations. In cases where the Navy must also provide public notification (such as stormwater permitting), coordinate with the Contracting Officer. Submit copies of all regulatory notifications to the Contracting Officer prior to commencement of work activities. Typically, regulatory notifications must be provided for the following (this listing is not all inclusive): demolition, renovation, NPDES defined site work, remediation of controlled substances (asbestos, hazardous waste, lead paint).

1.5.3 Environmental Brief

Attend an environmental brief to be included in the preconstruction meeting. Provide the following information: types, quantities, and use of hazardous materials that will be brought onto the activity; types and quantities of wastes/wastewater that may be generated during the contract. Discuss the results of the Preconstruction Survey at this time.

Prior to initiating any work on site, meet with the Contracting Officer and activity environmental staff to discuss the proposed Environmental Protection Plan. Develop a mutual understanding relative to the details

of environmental protection, including measures for protecting natural resources, required reports, required permits, permit requirements, and other measures to be taken.

1.5.4 Contractor 40 CFR Employee Training Records

Prepare and maintain employee training records throughout the term of the contract meeting applicable 40 CFR requirements. Submit these training records to the Contracting Officer at the conclusion of the project, unless otherwise directed.

1.6 ENVIRONMENTAL PROTECTION PLAN (EPP)

Prior to initiating any work on site, meet with the Contracting Officer to discuss the proposed Environmental Protection Plan and develop a mutual understanding relative to the details of environmental protection, including measures for protecting natural resources, required reports, and other measures to be taken. The Environmental Protection Plan must incorporate construction related objectives and targets from the installation's Environmental Management System. Submit the Environmental Protection Plan in the following format and include the elements specified below.

a. Description of the Environmental Protection Plan

(1) General overview and purpose

(a) A brief description of each specific plan required

by environmental permit or elsewhere in this contract.

(b) The duties and level of authority assigned to the person(s) on the job site that oversee environmental compliance.

(c) A copy of any standard or project specific operating procedures that will be used to effectively manage and protect the environment on the project site.

(d) Communication and training procedures that will be used to convey environmental management requirements to contractor employees and subcontractors.

(e) Emergency contact information contact information (office phone number, cell phone number, and e-mail address).

(2) General site information

b. Management of Natural Resources

(1) Land resources

(2) Tree protection

(3) Replacement of damaged landscape features

(4) Temporary construction

(5) Stream crossings

(6) Fish and wildlife resources

(7) Wetland areas

c. Protection of Historical and Archaeological Resources

(1) Objectives

(2) Methods

d. Storm Water Management and Control

(1) Ground cover

(2) Erodible soils

(3) Temporary measures

(a) Mechanical retardation and control of runoff

(b) Vegetation and mulch

(4) Effective selection, implementation and maintenance of Best Management Practices (BMPs).

e. Protection of the Environment from Waste Derived from

Contractor Operations

(1) Control and disposal of solid and sanitary waste. If Section 01 74 19.05 20 CONSTRUCTION AND DEMOLITION WASTE MANAGEMENT FOR DESIGN-BUILD is included in the contract, submit the plan required by that section as part of the Environmental Protection Plan.

(2) Control and disposal of hazardous waste (Hazardous Waste Management Section)

This item will consist of the management procedures for all hazardous waste to be generated. The elements of those procedures will coincide with the Activity Hazardous Waste Management Plan.
A copy of the Activity Hazardous Waste Management Plan will be provided by the Contracting Officer. As a minimum, include the following:

(a) Procedures to be employed to ensure a written waste determination is made for appropriate wastes which are to be generated;

(b) Sampling/analysis plan;

(c) Methods of hazardous waste accumulation/storage (i.e., in tanks and/or containers);

(d) Management procedures for storage, labeling, transportation, and disposal of waste (treatment of waste is not allowed unless specifically noted);

(e) Management procedures and regulatory documentation ensuring disposal of hazardous waste complies with Land Disposal Restrictions (40 CFR 268);

(f) Management procedures for recyclable hazardous materials such as lead-acid batteries, used oil, and the like;

(g) Used oil management procedures in accordance with 40 CFR 279;

(h) Pollution prevention\hazardous waste minimization procedures;

(i) Plans for the disposal of hazardous waste by permitted facilities;

(j) Procedures to be employed to ensure all required employee training records are maintained.

f. Prevention of Releases to the Environment

(1) Procedures to prevent releases to the environment

(2) Notifications in the event of a release to the environment

g. Regulatory Notification and Permits

List what notifications and permit applications must be

made. Some permits require up to 90 days to obtain. Demonstrate that those permits have been obtained or applied for by including copies of all applicable, environmental permits. The Plan will not be approved until all permits have been obtained.

1.6.1 Environmental Protection Plan Review

Within thirty days after the Contract award date, submit the proposed Environmental Protection Plan for review and approval. Commencement of work will not begin until the environmental protection plan has been approved.

1.6.2 Licenses and Permits

Obtain licenses and permits pursuant to the "Permits and Responsibilities" FAR Clause 52.236-7. Where required by the State regulatory authority, the inspections and certifications will be provided through the services of a Professional Engineer (PE), registered in the State where the work is being performed. Where a PE is not required, the individual must be otherwise qualified by other current State licensure, specific training and prior experience (minimum 5 years). As a part of the quality control plan, which is required by Section 01 45 00.05 20 DESIGN AND CONSTRUCTION QUALITY CONTROL, provide a sub item containing the name, appropriate professional registration or licence number, address, and telephone number of the professionals or other qualified persons who will be performing the inspections and certifications for each permit.

PART 2 PRODUCTS

Not Used

PART 3 EXECUTION

3.1 PROTECTION OF NATURAL RESOURCES

Preserve the natural resources within the project boundaries and outside the limits of permanent work. Restore to an equivalent or improved condition upon completion of work. Confine construction activities to within the limits of the work indicated or specified. If the work is near streams, lakes, or other waterways, conform to the national permitting requirements of the Clean Water Act.

Do not disturb fish and wildlife. Do not alter water flows or otherwise significantly disturb the native habitat adjacent to the project and critical to the survival of fish and wildlife, except as indicated or specified.

Except in areas to be cleared, do not remove, cut, deface, injure, or destroy trees or shrubs without the Contracting Officer's permission. Do not fasten or attach ropes, cables, or guys to existing nearby trees for anchorages unless authorized by the Contracting Officer. Where such use of attached ropes, cables, or guys is authorized, the Contractor will be responsible for any resultant damage.

Protect existing trees which are to remain and which may be injured, bruised, defaced, or otherwise damaged by construction operations.

Remove displaced rocks from uncleared areas. By approved excavation, remove trees with 30 percent or more of their root systems destroyed. Remove trees and other landscape features scarred or damaged by equipment operations, and replace with equivalent, undamaged trees and landscape features. Obtain Contracting Officer's approval before replacement.

The Contracting Officer's approval is required before any equipment will be permitted to ford live streams. In areas where frequent crossings are required, install temporary culverts or bridges. Obtain Contracting Officer's approval prior to installation. Remove temporary culverts or bridges upon completion of work, and repair the area to its original condition unless otherwise required by the Contracting Officer.

3.1.1 Erosion and Sediment Control Measures

3.1.1.1 Burnoff

Burnoff of the ground cover is not permitted.

3.1.1.2 Protection of Erodible Soils

Immediately finish the earthwork brought to a final grade, as indicated or specified. Immediately protect the side slopes and back slopes upon completion of rough grading. Plan and conduct earthwork to minimize the duration of exposure of unprotected soils.

3.1.1.3 Temporary Protection of Erodible Soils

Use the following methods to prevent erosion and control sedimentation:

a. Mechanical Retardation and Control of Runoff

Mechanically retard and control the rate of runoff from the construction site. This includes construction of diversion ditches, benches,

berms, and use of silt fences and straw bales to retard and divert runoff to protected drainage courses.

b. Sediment Basins

(1) Trap sediment in temporary sediment basins. Select a basin size to accommodate the runoff of a local 2-year storm. Pump dry and remove the accumulated sediment, after each storm. Use a paved weir or vertical overflow pipe for overflow. Remove collected sediment from the site. Institute effluent quality monitoring programs.

(2) Install, inspect, and maintain best management practices (BMPs) as required by the general permit. Prepare BMP Inspection Reports as required by the general permit. If required by the permit, include those inspection reports.

c. Vegetation and Mulch

(1) Provide temporary protection on sides and back slopes as soon

as rough grading is completed or sufficient soil is exposed to require erosion protection. Protect slopes by accelerated growth of permanent vegetation, temporary vegetation, mulching, or netting. Stabilize slopes by hydroseeding, anchoring mulch in place, covering with anchored netting, sodding, or such combination of these and other methods necessary for effective erosion control.

(2) Seeding: Provide new seeding where ground is disturbed. Include topsoil or nutriment during the seeding operation necessary to establish or reestablish a suitable stand of grass.

3.1.2 Erosion and Sediment Control Inspection Reports

Submit "Erosion and Sediment Control Inspection Reports" (E&S) (form provided at the pre-construction conference) and Storm Water Inspection Reports for General Permit for General Permit to the Contracting Officer once every 7 calendar days and within 24 hours of a storm event that produces 0.5 inch or more of rain.

Note erosion control inspection reports may be compiled as part of a stormwater pollution prevention plan inspection reports if applicable.

3.1.2.1 Storm Water Notice of Intent for Construction Activities and Storm Water Pollution Prevention Plan

The Contractor shall submit a Storm Water Notice of Intent (for NPDES coverage under the general permit for construction activities) and a Storm Water Pollution Prevention Plan (SWPPP) for the project to the Contracting Officer prior and gain approval prior to the commencement of work. The SWPPP must meet the requirements of the EPA or State general permit for storm water discharges from construction sites. Submit the SWPPP along with any required Notice of Intents, Notice of Termination, and appropriate permit fees, via the Contracting Officer, to the appropriate Federal or State agency for approval, a minimum of 45 calendar days prior to the start of any land disturbing activities. Maintain an approved copy of the SWPPP at the construction on-site office, and continually update as regulations require, reflecting current site conditions. Additional requirements may be found in UFGS Section 01 57 19.01 20, SUPPLEMENTAL TEMPORARY ENVIRONMENTAL CONTROLS.

Coverage under this permit requires the contractor prepare a Storm Water Pollution Prevention Plan (SWPPP), prepare and submit a Registration Statement as a co-permittee with the Construction Officer, and provide the permit fee to the responsible state agency before any land disturbing activities begin. File for permit coverage on behalf of both the Construction Officer and themself, and file a Notice of Termination once construction is complete and the site is stabilized with a final sustainable cover.

Under the terms and conditions of the permit, the Contractor may be required to install, inspect, maintain best management practices (BMPs), and submit stormwater BMP inspection reports and stormwater pollution prevention plan inspection reports. Ensure construction operations and management are constantly in compliance with the terms and conditions of the general permit for storm water discharges from construction activities.

a. The SWPPP shall:

(1) Identify potential sources of pollution which may be reasonably expected to affect the quality of storm water discharge from the site.

(2) Describe and ensure implementation of practices which will be used to reduce the pollutants in storm water discharge from the site.

(3) Ensure compliance with terms of the EPA or State general permit for storm water discharge.

(4) Select applicable best management practices from EPA 833-R-060-04.

(5) Include a completed copy of the Registration Statement, BMP Inspection Report Template and Notice of Termination except for the effective date.

(6) Storm Water Pollution Prevention Measures and Notice of Intent 40 CFR 122.26, EPA 833-R-060-04. Provide a "Storm Water Pollution Prevention Plan" (SWPPP) for the project. The SWPPP will meet the requirements of the EPA or State general permit for storm water discharges from construction sites. Submit the SWPPP along with any required Notice of Intents, Notice of Termination, and appropriate permit fees, via the Contracting Officer, to the appropriate Federal or State agency for approval, a minimum of 14 calendar days prior to the start of construction. A copy of the approved SWPPP will be kept at the construction on-site office, and continually updated as regulations require reflecting current site conditions.

3.1.2.2 Storm Water Pollution Prevention Plan Compliance Notebook

Create and maintain a three ring binder of documents that demonstrate compliance with the Stormwater Construction Activity permit. The binder shall include a copy of the permit Registration Statement, proof of permit fee payment, SWPPP and SWPPP update amendments, inspection reports, copies of correspondence with the list agency that issued the permit i.e. Virginia DCR and a copy of the permit Notice of Termination. At the completion of the project the notebook shall become the property of the Government. Provide the compliance notebook to Contracting Officer. Provide an advance copy of the Registration Statement to the Contracting Officer immediately after the form is presented to the permitting agency.

3.1.3 Stormwater Drainage and Construction Dewatering

There will be no discharge of excavation ground water to the sanitary sewer, storm drains, or to the river without prior specific authorization of the Environmental Division in writing. Discharge of hazardous substances will not be permitted under any circumstances.

Construction site runoff will be prevented from entering any storm drain or the river directly by the use of straw bales or other method suitable to the Environmental Division. Contractor will provide erosion

protection of the surrounding soils.

Construction Dewatering shall not be discharged to the sanitary sewer. If the construction dewatering is noted or suspected of being contaminated, it may only be released to the storm drain system if the discharge is specifically permitted. Authorization for any contaminated groundwater release shall be obtained in advance from the base Environmental Officer. Discharge of hazardous substances will not be permitted under any circumstances.

3.2 HISTORICAL AND ARCHAEOLOGICAL RESOURCES

Carefully protect in-place and report immediately to the Contracting Officer historical and archaeological items or human skeletal remains discovered in the course of work. Upon discovery, notify the Contracting Officer. Stop work in the immediate area of the discovery until directed by the Contracting Officer to resume work. The Government retains ownership and control over historical and archaeological resources.

3.3 SOLID WASTE MANAGEMENT PLAN and PERMIT

Provide to the contracting officer written notification of the quantity of solid waste/debris that is anticipated to be generated by construction.
Include in the report the locations where various types of waste will be disposed or recycled. Include letters of acceptance or as applicable, submit one copy of a State and local Solid Waste Management Permit or license showing such agency's approval of the disposal plan before transporting wastes off Government property.

3.3.1 Solid Waste Management Report

Monthly, submit a solid waste disposal report to the Contracting Officer. For each waste, the report will state the classification (using the definitions provided in this section), amount, location, and name of the business receiving the solid waste.

Include copies of the waste handling facilities' weight tickets, receipts, bills of sale, and other sales documentation. In lieu of sales documentation, the Contractor may submit a statement indicating the disposal location for the solid waste which is signed by an officer of the Contractor firm authorized to legally obligate or bind the firm. The sales documentation or Contractor certification will include the receiver's tax identification number and business, EPA or State registration number, along with the receiver's delivery and business addresses and telephone numbers. For each solid waste retained by the Contractor for his own use, the Contractor will submit on the solid waste disposal report the information previously described in this paragraph.
Prices paid or received will not be reported to the Contracting Officer unless required by other provisions or specifications of this Contract or public law.

3.3.2 Control and Management of Solid Wastes

Pick up solid wastes, and place in covered containers which are

regularly emptied. Do not prepare or cook food on the project site. Prevent contamination of the site or other areas when handling and disposing of wastes. At project completion, leave the areas clean. Recycling is encouraged and can be coordinated with the Contracting Officer and the activity recycling coordinator. Remove all solid waste (including non-hazardous debris) from Government property and dispose off-site at an approved landfill. Solid waste disposal off-site must comply with most stringent local, State, and Federal requirements including 40 CFR 241,40 CFR 243, and 40 CFR 258.

Manage spent hazardous material used in construction, including but not limited to, aerosol cans, waste paint, cleaning solvents, contaminated brushes, and used rags, as per environmental law.

3.3.2.1 Dumpsters

Equip dumpsters with a secure cover and paint the standard base color. Keep cover closed at all times, except when being loaded with trash and debris. Locate dumpsters behind the construction fence or out of the public view. Empty site dumpsters at least once a week. or as needed to keep the site free of debris and trash. If necessary, provide 55 gallon trash containers painted the darker base color to collect debris in the construction site area. Locate the trash containers behind the construction fence or out of the public view. Empty trash containers at least once a day. For large demolitions, large dumpsters without lids are acceptable but should not have debris higher than the sides before emptying.

3.4 WASTE DETERMINATION DOCUMENTATION

Complete a Waste Determination form (provided at the pre-construction conference) for all contractor derived wastes to be generated. Base the waste determination upon either a constituent listing from the manufacturer used in conjunction with consideration of the process by which the waste was generated, EPA approved analytical data, or laboratory analysis (Material Safety Data Sheets (MSDS) by themselves are not adequate). Attach all support documentation to the Waste Determination form. As a minimum, a Waste Determination form must be provided for the following wastes (this listing is not all inclusive): oil and latex based painting and caulking products, solvents, adhesives, aerosols, petroleum products, and all containers of the original materials.

3.5 POLLUTION PREVENTION/HAZARDOUS WASTE MINIMIZATION

Minimize the use of hazardous materials and the generation of hazardous waste. Include procedures for pollution prevention/ hazardous waste minimization in the Hazardous Waste Management Section of the Environmental Protection Plan. Consult with the activity Environmental Office for suggestions and to obtain a copy of the installation's pollution prevention/hazardous waste minimization plan for reference material when preparing this part of the plan. If no written plan exists, obtain information by contacting the Contracting Officer. Describe the types of the hazardous materials expected to be used in the construction when requesting information.

3.6 WASTE HAZARDOUS MATERIAL (WHM)/HAZARDOUS WASTE (HW) MATERIALS PROHIBITION

No waste hazardous material or hazardous waste shall be disposed of on government property. No hazardous material shall be brought onto government property that does not directly relate to requirements for the performance of this contract. The government is not responsible for disposal of Contractor's waste material brought on the job site and not required in the performance of this contract. The intent of this provision is to dispose of that waste identified as waste hazardous material/hazardous waste as defined herein that was generated as part of this contract and existed within the boundary of the Contract limits and not brought in from offsite by the Contractor. Incidental materials used to support the contract including, but not limited to aerosol cans, waste paint, cleaning solvents, contaminated brushes, rags, clothing, etc. are the responsibility of the Contractor. The list is illustrative rather than inclusive. The Contractor is not authorized to discharge any materials to sanitary sewer, storm drain, or to the river or conduct waste treatment or disposal on government property without written approval of the Contracting Officer.

3.7 HAZARDOUS MATERIAL MANAGEMENT

Include hazardous material control procedures in the Safety Plan. Address procedures and proper handling of hazardous materials, including the appropriate transportation requirements. No hazardous material shall be brought onto government property that does not directly relate to requirements for the performance of this contract. Submit a MSDS and estimated quantities to be used for each hazardous material to the Contracting Officer prior to bringing the material on base. Typical materials requiring MSDS and quantity reporting include, but are not limited to, oil and latex based painting and caulking products, solvents, adhesives, aerosol, and petroleum products. Ensure that hazardous materials are utilized in a manner that will minimize the amount of hazardous waste that is generated. Ensure that all containers of hazardous materials have NFPA labels or their equivalent. Certify that all hazardous materials removed from the site are hazardous materials and do not meet the definition of hazardous waste per 40 CFR 261.

3.8 PETROLEUM PRODUCTS AND REFUELING

Conduct the fueling and lubricating of equipment and motor vehicles in a manner that protects against spills and evaporation. Manage all used oil generated on site in accordance with 40 CFR 279. Determine if any used oil generated while on-site exhibits a characteristic of hazardous waste. Used oil containing 1000 parts per million of solvents will be considered a hazardous waste and disposed of at Contractor's expense. Used oil mixed with a hazardous waste will also be considered a hazardous waste.

3.8.1 Oily and Hazardous Substances

Prevent oil or hazardous substances from entering the ground, drainage areas, or navigable waters. In accordance with 40 CFR 112, surround all temporary fuel oil or petroleum storage tanks with a temporary berm or
containment of sufficient size and strength to contain the contents of the tanks, plus 10 percent freeboard for precipitation. The berm will be

impervious to oil for 72 hours and be constructed so that any discharge will not permeate, drain, infiltrate, or otherwise escape before cleanup occurs. Provide general secondary containment for oil transfer operations as required by 40 CFR 112.7.

3.8.2 Inadvertent Discovery of Petroleum Contaminated Soil or Hazardous Wastes

If petroleum contaminated soil or suspected hazardous waste is found during construction that was not identified in the contract documents, the contractor shall immediately notify the contracting officer. The contractor shall not disturb this material until authorized by the contracting officer.

3.9 FUEL TANKS

Petroleum products and lubricants required to sustain up to 30 days of construction activity may be kept on site. Storage and refilling practices shall comply with 40 CFR Part 112. Secondary containment shall be provided and be no less than 110 percent of the tank volume plus five inches of free-board. If a secondary berm is used for containment then the berm shall be impervious to oil for 72 hours and be constructed so that any discharge will not permeate, drain, infiltrate, or otherwise escape before cleanup occurs. Drips pans are required and the tanks must be covered during inclement weather.

3.10 RELEASES/SPILLS OF OIL AND HAZARDOUS SUBSTANCES

Exercise due diligence to prevent, contain, and respond to spills of hazardous material, hazardous substances, hazardous waste, sewage, regulated gas, petroleum, lubrication oil, and other substances regulated by environmental law. Maintain spill cleanup equipment and materials at the work site. In the event of a spill, take prompt, effective action to stop, contain, curtail, or otherwise limit the amount, duration, and severity of the spill/release. In the event of any releases of oil and hazardous substances, chemicals, or gases; immediately (within 15 minutes) notify the Base or Activity Fire Department, the activity's Command Duty Officer, and the Contracting Officer. If the contractor's response is inadequate, the Navy may respond. If this should occur, the contractor will be required to reimburse the government for spill response assistance and analysis.

The Contractor is responsible for verbal and written notifications as required by the federal 40 CFR 355, State, local regulations and Navy Instructions. Spill response will be in accordance with 40 CFR 300 and applicable State and local regulations. Contain and clean up these spills without cost to the Government. If Government assistance is requested or required, the Contractor will reimburse the Government for such assistance. Provide copies of the written notification and documentation that a verbal notification was made within 20 days.

Maintain spill cleanup equipment and materials at the work site. Clean up all hazardous and non-hazardous (WHM) waste spills. The Contractor shall reimburse the government for all material, equipment, and clothing generated during any spill cleanup. The Contractor shall reimburse the government for all costs incurred including sample analysis materials, equipment, and labor if the government must initiate its own spill

cleanup
procedures, for Contractor responsible spills, when:

a. The Contractor has not begun spill cleanup procedure within one hour of spill discovery/occurrence, or

b. If, in the government's judgment, the Contractor's spill cleanup is not adequately abating life threatening situation and/or is a threat to any body of water or environmentally sensitive areas.

3.11 CONTROL AND MANAGEMENT OF ASBESTOS CONTAINING MATERIAL (ACM)

Items, components, or materials disturbed by or included in work under this contract do not involve asbestos. Other materials in the general area around where work will be performed may contain asbestos. All thermal insulation, in all work areas, should be considered to be asbestos unless positively identified by conspicuous tags or previous laboratory analysis certifying them as asbestos free.

Inadvertent discovery of non-disclosed asbestos that will result in an abatement action requires a change in scope before proceeding. Upon discovery of asbestos containing material not identified in the contract documents, the Contractor shall immediately stop all work that would generate further damage to the material, evacuate the asbestos exposed area, and notify the Contracting Officer for resolution of the situation prior to resuming normal work activities in the affected area. Do not remove or perform work on any asbestos containing materials without the prior approval of the Contracting Officer. Do not engage in any activity, which would remove or damage such materials or cause the generation of fibers from such materials.

Manage and dispose of asbestos containing waste in accordance with applicable environmental law. Asbestos containing waste shall be manifested and the manifest provided to the Contracting Officer.

3.12 CONTROL AND MANAGEMENT OF HAZARDOUS WASTES

3.12.1 Facility Hazardous Waste Generator Status

The project activity is designated as a Conditionally Exempt-Small Quantity Generator. All work conducted within the boundaries of this activity must meet the regulatory requirements of this generator designation. Comply with all provisions of Federal, State and local regulatory requirements applicable to this generator status regarding training and storage, handling, and disposal of all construction derived wastes.

3.12.2 Hazardous Waste/Debris Management

Identify all construction activities which will generate hazardous waste/debris. Provide a documented waste determination for all resultant waste streams. Hazardous waste/debris will be identified, labeled, handled, stored, and disposed of in accordance with all Federal, State, and local regulations including 40 CFR 261, 40 CFR 262, 40 CFR 263,
40 CFR 264, 40 CFR 265, 40 CFR 266, and 40 CFR 268.

Hazardous waste will also be managed in accordance with the approved Hazardous Waste Management Section of the Environmental Protection Plan.
Store hazardous wastes in approved containers in accordance with 49 CFR 173 and 49 CFR 178. Hazardous waste generated within the confines of Government facilities will be identified as being generated by the Government.

Prior to removal of any hazardous waste from Government property, all hazardous waste manifests must be signed by activity personnel from the Station Environmental Office.No hazardous waste must be brought onto Government property. Provide to the Contracting Officer a copy of waste determination documentation for any solid waste streams that have any potential to be hazardous waste or contain any chemical constituents listed in 40 CFR 372-SUBPART D. For hazardous wastes spills, verbally notify the Contracting Officer immediately.

3.12.2.1 Regulated Waste Storage/Satellite Accumulation/90 Day Storage Areas

If the work requires the temporary storage/collection of regulated or hazardous wastes, the Contractor will request the establishment of a Regulated Waste Storage Area, a Satellite Accumulation Area, or a 90 Day Storage Area at the point of generation. The Contractor must submit a request in writing to the Contracting Officer providing the following information:

Contract Number	_____
Contractor	_____
Haz/Waste or Regulated Waste POC	_____
Phone Number	_____
Type of Waste	
Source of Waste	_____
Emergency POC	_____
Phone Number	_____
Location of the Site	_____

(Attach Site Plan to the Request)

Attach a waste determination form. Allow ten working days for processing this request. The designated area where waste is being stored shall be barricaded and a sign identifying as follows:

"DANGER - UNAUTHORIZED PERSONNEL KEEP OUT"

3.12.2.2 Hazardous Waste Disposal

No hazardous, toxic, or universal waste shall be disposed or hazardous

material abandoned on government property. And unless otherwise noted in this contract, the government is not responsible for disposal of Contractor generated waste material. The disposal of incidental materials used to accomplish the work including, but not limited to aerosol cans, waste paint, cleaning solvents, contaminated brushes, rags, clothing, etc. are the responsibility of the Contractor. The list is illustrative rather

than inclusive.

The Contractor is not authorized to discharge any materials to sanitary sewer, storm drain, or water way or conduct waste treatment or disposal on government property without written approval of the Contracting Officer.

Control of stored waste, packaging, sampling, analysis, and disposal will be determined by the details in the contract. The requirements for jobs in the following paragraphs will be used as the guidelines for disposal of any hazardous waste generated.

a. Responsibilities for Contractor's Disposal

Contractor responsibilities include any generation of WHM/HW requiring Contractor disposal of solid waste or liquid.

(1) Provide all service necessary for the final treatment/disposal of the hazardous material/waste in accordance with all local, State and Federal laws and regulations, and the terms and conditions of the contract within sixty (60) days after the materials have been generated. These services will include all necessary personnel, labor, transportation, packaging, detailed analysis (if required for disposal, and/or transportation, including manifesting or completing waste profile sheets, equipment, and the compilation of all documentation is required).

(2) Contain all waste in accordance with 40 CFR 260, 40 CFR 261, 40 CFR 262, 40 CFR 263, 40 CFR 264, 40 CFR 265, 40 CFR 266,40 CFR 268, 40 CFR 270, 40 CFR 272, 40 CFR 273, 40 CFR 279, 40 CFR 280, and 40 CFR 761.

(3) Obtain a representative sample of the material generated for each job done to provide waste stream determination.

(4) Analyze each sample taken and providing analytical results to the Contracting Officer. Provide two copies of the results.

(5) Determine the DOT proper shipping names for all waste (each container requiring disposal) and will demonstrate how this determination is developed and supported by the sampling and analysis requirements contained herein to the Contracting Officer.

Contractor Disposal Turn-In Requirements

For any waste hazardous materials or hazardous waste generated which requires the Contractor to dispose of, the following

conditions must be complied with in order to be acceptable for disposal:

(1) Drums compatible with waste contents and drums meet DOT requirements for 49 CFR 173 for transportation of materials.

(2) Drums banded to wooden pallets. No more than three (3) 55 gallon drums to a pallet, or two (2) 85 gallon over packs.

(3) Band using 1-1/4 inch minimum band on upper third of drum.

(4) Recovery materials label (provided by Code 106.321) located in middle of drum, filled out to indicate actual volume of material, name of material manufacturer, other vendor information as available.

(5) Always have three (3) to five (5) inches of empty space above volume of material.This space is called 'outage'.

3.12.3 Class I ODS Prohibition

Class I in pure or blended form as defined and identified herein must not be used in the performance of this contract, nor be provided as part of the equipment except for the use of servicing existing government owned equipment. This prohibition will be considered to prevail over any other provision, specification, drawing, or referenced documents.

3.12.3.1 Recycling Requirements

Recycle used refrigerants and ozone depleting substances generated during the performance of this contract to the maximum extent practicable to minimize used refrigerant and ozone depleting substance disposal as HW.

Test, collect, transfer, recycle, and/or arrange for shipping and proper disposal of used refrigerants and ozone depleting substances generated during the performance of work under this contract. The Contractor is responsible for all associated costs.

Any and all Class I ODS and R-22 recovered by the Contractor as part of this contract shall be packaged and turned over to the Government for recycling upon the completion of the work covered by this contract. The Contractor shall arrange for recycling of used refrigerants not turned over to the government, at a licensed refrigerant recycler approved by the Contracting Officer.

3.12.3.2 EPA Certification Requirements

Heating and air conditioning technicians must be certified through an EPA-approved program. Copies of certifications shall be maintained at the employees' place of business and be carried as a wallet card by the technician, as provided by environmental law. .

3.12.3.3 Accidental Venting of Refrigerant

Accidental venting of a refrigerant is a release and must be reported to the Contracting Officer

3.13 DUST CONTROL

Keep dust down at all times, including during nonworking periods. Sprinkle or treat, with dust suppressants, the soil at the site, haul roads, and other areas disturbed by operations. Dry power brooming will not be permitted. Instead, use vacuuming, wet mopping, wet sweeping, or wet power brooming. Air blowing will be permitted only for cleaning nonparticulate debris such as steel reinforcing bars. Only wet cutting will be permitted for cutting concrete blocks, concrete, and bituminous concrete. Do not unnecessarily shake bags of cement, concrete mortar, or plaster.

3.13.1 Dirt and Dust Control Plan

Submit truck and material haul routes along with a plan for controlling dirt, debris, and dust on base roadways. As a minimum, identify in the plan the subcontractor and equipment for cleaning along the haul route and measures to reduce dirt, dust, and debris from roadways.

3.14 ABRASIVE BLASTING

3.14.1 Blasting Operations

The use of silica sand is prohibited in sandblasting.

Provide tarpaulin drop cloths and windscreens to enclose abrasive blasting operations to confine and collect dust, abrasive, agent, paint chips, and other debris in accordance with the requirements specified.

3.14.2 Disposal Requirements

Submit analytical results of the debris generated from abrasive blasting operations per Laboratory Analysis in paragraph SAMPLING AND ANALYSIS OF HW. Hazardous waste generated from blasting operations will be managed in accordance with paragraph CONTROL AND MANAGEMENT OF HAZARDOUS WASTE and with the approved HWMP. Disposal of non-hazardous abrasive blasting debris will be in accordance with paragraph CONTROL AND DISPOSAL OF SOLID WASTES.

3.15 NOISE

Make the maximum use of low-noise emission products, as certified by the EPA. Blasting or use of explosives will not be permitted without written permission from the Contracting Officer, and then only during the designated times. Confine pile-driving operations to the period between 8
a.m. and 4 p.m., Monday through Friday, exclusive of holidays, unless otherwise specified.

3.16 MERCURY MATERIALS

Mercury is prohibited in the construction of this facility, unless specified otherwise, and with the exception of mercury vapor lamps and fluorescent lamps. Dumping of mercury-containing materials and devices such as mercury vapor lamps, fluorescent lamps, and mercury switches,

in rubbish containers is prohibited. Remove without breaking, pack to prevent breakage, and transport out of the activity in an unbroken condition for disposal as directed. Immediately report to the Environmental Office and the Contracting Officer instances of breakage or mercury spillage. Clean mercury spill area to the satisfaction of the Contracting Officer.

Cleanup of a mercury spill shall not be recycled and shall be managed as a hazardous waste for disposal.

-- End of Section --

SECTION 01 57 19.01 20

SUPPLEMENTAL TEMPORARY ENVIRONMENTAL CONTROLS

02/10

PART 1 GENERAL

1.1 DEFINITIONS

1.1.1 Industrial Waste

Wastes not meeting the definitions of dangerous waste, sewage or refuse. Typically waste by-products regulated by environmental regulations.

1.2 MID-ATLANTIC

1.2.1 Virginia

1.2.1.1 Definition and Disposal Requirements of Empty Paint Cans

Paint Cans: Paint cans that are empty (free of liquids and contains less than 1 inch of dried material) of paints, solvents, thinners and adhesives may be disposed of in dumpsters.

Metal paint cans that meet the empty standard can be placed in dumpsters marked "metal only"; plastic cans may be placed in solid waste dumpsters. Manage paint cans with liquid or more than 1 inch of solidified oil-based paint as a hazardous waste and properly label. Manage paint cans with excess water-based paint as non-hazardous waste. Contact NAVFAC MIDLANT Environmental Services for management requirements.

1.2.1.2 Erosion and Sediment Control Measures and Stormwater Management

1.2.1.2.1 Erosion and Sediment Control

Erosion control plan review is not required by the Commonwealth of Virginia based on the project land disturbance. Erosion control measures shall be incorporated to control sediment and dust from being transported outside the project limits. Erosion control measures shall include silt fencing, inlet protection and tree protection. Because of the limited area of disturbance for the Building 1618 renovations, stormwater management is not required for the project.

1.2.1.3 Hazardous Waste Requirements for Virginia Installations:

1.2.1.3.1 Excavation

If soil is to be reused on site, sampling is not required unless otherwise directed. Excavated soil may be re-used within the construction site with no testing necessary. Soil may be stockpiled until the end of the project, then re-used as much as possible prior to sampling/analysis for residual soil to be disposed of. Store all in a manner that prevents rain from infiltrating the soil matrix and preventing any runoff into the surrounding soil or pavement (e.g. store the soil on top of plastic sheets and covered with plastic sheets or in lined, covered dumpsters). If the soil is going to be relocated or disposed outside the construction site, sampling and analysis is required. Contact the installation HW Program Manager prior to disposal to determine the appropriate sampling/ test parameters. Soil disposal requirements will depend on test results. If soil is to be shipped to a destination outside the fire ant quarantine area (outside of James City

County, York County, Chesapeake, Hampton, Newport News, Norfolk, Poquoson, Portsmouth, Suffolk, Virginia Beach or Williamsburg) it MUST have a valid inspection certificate issued by an Officer of the Plant Protection and Quarantine Program (PPQ) of the U.S. Department of Agriculture. Contact the EV Pest Management Coordinator for additional information.

Sub-surface archaeological resources can be encountered unexpectedly. During any soil disturbing activities, should historic or prehistoric artifacts, buried features, or structural foundations be discovered, halt the action and contact the NAVFAC MIDLANT Regional Historic Preservation Officer and the Contracting Officer immediately.

1.2.1.3.2 Dumpsters

Keep cover closed at all times, except when being loaded with trash and debris. Empty site dumpsters at least once a week or as needed to keep the site free of debris and trash. Label trash containers to appropriately describe the contents.

1.2.1.4 Air Requirements:

1.2.1.4.1 Painting

Control volatile organic compound emissions by keeping all paint, solvent, and waste containers closed/secured except when adding or removing material or waste. Control air emissions via air drying cans for disposal only if liquid residue is less than 1 inch.

Control particulate matter emissions by using containment such as shrouds to contain overspray during spraying operations.

1.2.1.4.2 Paint Removal

Control dust, abrasive agent, paint chips, and other debris during abrasive blasting or similar operations that could emit dust/debris. Containment could include application of water and use of shrouding/containment. Consider other environmental program requirements such as Clean Water Act (CWA) requirements when making decisions in regard to BMPs.

PART 2 PRODUCTS

Not Used

PART 3 EXECUTION

Not Used

-- End of Section --

SECTION 01 74 19.05 20

CONSTRUCTION AND DEMOLITION WASTE MANAGEMENT FOR DESIGN-BUILD
06/10

PART 1 GENERAL

1.1 GOVERNMENT POLICY

Government policy is to apply sound environmental principles in the design, construction and use of facilities. As part of the implementation of that policy the Contractor shall: (1) practice efficient waste management when sizing, cutting, and installing products and materials and
(2) use all reasonable means to divert construction and demolition waste from landfills and incinerators and to facilitate their recycling or reuse.

1.2 PLAN

A waste management plan shall be submitted within 15 days after contract award and prior to initiating any site preparation work. The plan shall include the following:

a. Name of individuals on the Contractor's staff responsible for waste prevention and management.

b. Actions that will be taken to reduce solid waste generation.

c. Description of the specific approaches to be used in recycling/reuse of the various materials generated, including the areas and equipment to be used for processing, sorting, and temporary storage of wastes.

d. Characterization, including estimated types and quantities, of the waste to be generated.

e. Actions that will be taken to divert at least 50% of the non-hazardous solid wastes (including waste from construction and demolition operations) from the waste stream. Report actual diversion rates during construction and demolition.

f. Name of landfill and/or incinerator to be used and the estimated costs for use, assuming that there would be no salvage or recycling on the project.

g. Identification of local and regional reuse programs, including non-profit organizations such as schools, local housing agencies, and organizations that accept used materials such as materials exchange networks and Habitat for Humanity.

h. List of specific waste materials that will be salvaged for resale, salvaged and reused, or recycled. Recycling facilities that will be used shall be identified. Provide percentage of non-hazardous construction and demolition waste materials that have been

diverted from the waste stream.

i. Identification of materials that cannot be recycled/reused with an explanation or justification.

j. Anticipated net cost savings determined by subtracting Contractor program management costs and the cost of disposal from the revenue generated by sale of the materials and the incineration and/or landfill cost avoidance.

1.3 RECORDS

Records shall be maintained to document the quantity of waste generated; the quantity of waste diverted through sale, reuse, or recycling; and the quantity of waste disposed by landfill or incineration. Report with monthly invoicing the tons diverted, the tons sent to the landfill, cost for each, and the monthly diversion rate. The records shall be made available to the Contracting Officer during construction, and a copy of the records shall be delivered to the Contracting Officer upon completion of the construction.

1.4 DISPOSAL

Except as otherwise specified in other sections of the specifications, disposal shall be in accordance with the following:

1.4.1 Reuse.

First consideration shall be given to salvage for reuse since little or no re-processing is necessary for this method, and less pollution is created when items are reused in their original form. Sale or donation of waste suitable for reuse shall be considered. Salvaged materials, other than those specified in other sections to be salvaged and reinstalled, shall not be used in this project.

1.4.2 Recycle.

Waste materials not suitable for reuse, but having value as being recyclable, shall be made available for recycling whenever economically feasible.

1.4.3 Waste.

Materials with no practical use or economic benefit shall be disposed at a landfill or incinerator.

PART 2 PRODUCTS

Not used.

PART 3 EXECUTION

Not used.

-- End of section --

SECTION 01 78 24.00 20

FACILITY ELECTRONIC OPERATION AND MAINTENANCE SUPPORT INFORMATION (eOMSI)
05/14

PART 1 GENERAL

1.1 DEFINITIONS AND ABBREVIATIONS

1.1.1 Systems

The words "system", "systems", and "equipment", when used in this document refer to as-built systems and equipment.

1.1.2 Computer Assisted Design and Drafting (CADD)

Electronic Computer Assisted Design and Drafting graphic software program that is used to create facility design contract documents and Record Drawings.

1.1.3 KTR

An abbreviation for "Contractor."

1.2 EOMSI MEETINGS

Provide, organize, coordinate, and facilitate the meetings necessary to obtain the information to complete the eOMSI Manual and eOMSI Facility Data Workbook.

1.2.1 Post-Award Kickoff Meeting

Discuss the following in this

meeting:

a. eOMSI Manual and eOMSI Facility Data Workbook Development Meetings

b. Processes and methods of gathering eOMSI Manual and eOMSI Facility Data Workbook information during construction.

c. The eOMSI Submittals schedule. Place the eOMSI submittal schedule on the construction schedule.

d. Provision of electronic version of electronic eOMSI Facility Data Workbook file for Contractor's use and completion.

1.2.2 eOMSI Manual and Facility Data Workbook Development Meetings

Meet with key personnel to discuss the eOMSI Manual and Facility DataWorkbook requirements, and the deliverables. Lead a series of meetings that begin after the Post-Award Kickoff Meeting and conclude with the Contractor's final eOMSI Manual and Facility Data Workbook submittal. Include the Contractor's eOMSI Manual and Facility Data Workbook Preparer, Designer of Record (DOR), and Quality Control Manager, the Commissioning Authority (CA), and the Government's Design Manager (DM), Construction Manager (CM), and NAVFAC Public Works (PW)

Facilities Management Specialist (FMS), to attend these meetings. Also include the Mechanical, Electrical, and Fire Protection Sub-Contractors as required. As a minimum, perform the following tasks at these meetings:

a. Familiarize the Contractor with the eOMSI Facility Data Workbook.

b. Coordinate the Facility Operational and Maintenance training requirements.

c. Review progress of eOMSI Manual and eOMSI Facility Data Workbook development, and discuss issues that need to be resolved.

d. Review the electronic format of the eOMSI Manual and eOMSI Facility Data Workbook.

1.2.3 Field Validation Meetings of eOMSI Manual and eOMSI Facility Data Workbook

Field validate the accuracy of the eOMSI Manual and eOMSI Facility Data Workbook submittal in accordance with paragraph FIELD VALIDATION. Include the following personnel in this validation: Contractor's eOMSI Manual and Facility Data Workbook Preparer, Superintendent, Quality Control Manager, and Commissioning Authority (CA). Include the DOR and Sub-Contractors as required to verify as-built conditions. Coordinate Field Validation with the Contracting Officer to avoid conflict with Contract Schedule.

Perform the validation, document the results of the field validation, and correct the eOMSI, Final Submittal to reflect the changes identified.

1.2.4 Facility Turnover Meeting

Refer to paragraph FACILITY TURNOVER PLANNING MEETINGS in Section 01 31 19.05 20 POST AWARD MEETINGS for eOMSI facility turnover meeting requirements.

1.3 SUBMITTAL SCHEDULING

1.3.1 eOMSI, Preliminary Submittal

Submit the Preliminary submittal when construction is approximately 50 percent complete. Provide eOMSI Manual Files (Bookmarked PDF) and eOMSI Facility Data Workbook (Excel).

Include all elements and portions of system construction completed up to this point. Provide four electronic copies to the Contracting Officer for approval.

1.3.2 eOMSI, Prefinal Submittal

Submit four electronically formatted copies of the 100 percent submittal of the eOMSI Prefinal Submittal to the Contracting Officer for approval. The eOMSI, Prefinal Submittal is due 90 calendar days prior to Beneficial Occupancy Date (BOD). This submittal must provide a

complete, working document that can be used to operate and maintain the facility. Any portion of the submittal that is incomplete or inaccurate requires the entire submittal to be returned for correction. Ensure all Government requested changes from the Preliminary submittal are incorporated into the Prefinal submission.

Submit the Prefinal submittal when construction is approximately 90 percent complete. Provide eOMSI Manual Files (Bookmarked PDF) and eOMSI Facility Data Workbook (Excel).

1.3.3 eOMSI, Final Submittal

Provide completed eOMSI Manual Files (Bookmarked PDF) and eOMSI Facility Data Workbook (Excel). The Final submittal is due at BOD. Ensure all Government requested changes from the Prefinal submittal are incorporated into the Final submission.

1.4 UNITS OF MEASURE

Provide eOMSI utilizing the units of measure required by the RFP for the facility. Refer to Section 01 33 10.05 20 DESIGN SUBMITTAL PROCEDURES.

1.5 SUBMITTALS

Government approval is required for submittals with a "G" designation; submittals not having a "G" designation are for Contractor Quality Control approval. Submit the following in accordance with Section 01 33 00.05 20,
CONSTRUCTION SUBMITTAL PROCEDURES and 01 33 10.05 20, DESIGN SUBMITTAL PROCEDURES:

SD-10 Operation and Maintenance Data

Training Plan; G

Training Outline;

G Training

Content; G

SD-11 Closeout Submittals

eOMSI, Preliminary Submittal;

G eOMSI, Prefinal Submittal;

G eOMSI, Final Submittal; G

Training Video Recording; G

Validation of Training Completion;

G PART 2 PRODUCTS

2.1 eOMSI FILES FORMAT

Scan eOMSI Manual Files and eOMSI Facility Data Workbook for malicious viruses using a commercially available scanning program that is routinely updated to identify and remove current virus threats.

Provide four electronic copies to the Contracting Officer for approval. Provide eOMSI Manual files on CD or data DVD disks using the most current version of Adobe Acrobat or similar software capable of producing PDF files. Provide eOMSI Facility Data Workbook on compact disks (CD) or data digital versatile disk (DVD) disks in (EXCEL) format.

2.1.1 eOMSI Manual Organization

Organize the eOMSI Manuals into three parts: 1) Product and Drawing Information, 2) Facility Information, and 3) Primary Systems. Bookmark the PDF files for easy access to the information.

a. Bookmark Facility Information and Primary Systems to at least one level lower than the major system.

b. Bookmark Product and Drawing Information documents using the current version of CSI Masterformat numbering system, and arrange submittals using the specification sections as a structure. Use CSI Masterformat and UFGS numbers along with descriptive bookmarking titles that explain the content of the information that is being bookmarked.

2.1.2 eOMSI Manual Compact Disk Label and Disk Holder or Case

Provide the following information on the compact disk label and disk holder or case:

a. Building Number

b. Project Title

c. Activity and Location

d. Construction Contract Number

e. Prepared For: (Contracting Agency)

f. Prepared By: (Name, title, phone number and email address)

g. Include the compact disk content on the disk label

h. Date

i. Virus scanning program used

2.2 EOMSI MANUAL

2.2.1 Product and Drawing Information

Provide an organized record of the facility products, materials, equipment, and minimum information necessary to operate the facility. Provide Product and Drawing Information for all systems in the final constructed facility, including the anticipated critical systems identified in this specification section. Organize and bookmark the

information for easy access and quick retrieval.

2.2.1.1 Shop Drawings

Provide and edit original CADD drawings, or original facility design drawings, to eliminate unneeded information; annotate and highlight the eOMSI information. Provide in source file and PDF format. Provide the following drawings at a large enough scale to be clear, legible, and able to differentiate designated isolation units from surrounding valves and switches.

a. Utility Schematic Diagrams - Provide a one line schematic diagram for each utility system such as power, water, wastewater, and gas/fuel. Schematic diagram must show from the point where the utility line is connected to the mainline up to the five-foot connection point to the facility. Indicate location or area designation for route of

transmission or distribution lines; locations of duct banks, manholes/ handholes or poles; isolation units such as valves and switches; and utility facilities such as pump stations, lift stations, and substations.

b. Enlarged Connection and Cutoff Plans - Provide enlarged floor plans that provide information between the five foot utility connection point and where utilities connect to facility distribution. Enlarge floor plans/ elevations of the rooms where the utility enters the building and indicate on these plans locations of the main interior and exterior connection and cutoff points for all utilities. Also enlarge floor plans / elevations of the rooms where equipment is located. Include enough information to enable someone unfamiliar with the facility to locate the connection and cutoff points. Indicate designations such as room number, panel number, circuit breaker, or valve number, of each utility and equipment connection and cutoff point, and what that connection and cutoff point controls.

2.2.1.2 Record Drawings

Provide an electronic copy of the Record Drawings for the project in source format and PDF format, bookmarking all drawings using the sheet title and sheet number.

2.2.2 Facility Information

Provide the following in Facility Information:

2.2.2.1 General Facility and System Description

Describe the function of the facility. Detail the overall dimensions of the facility, number of floors, foundation type, expected number of occupants, and facility Category Code. List and generally describe all the facility systems listed in the Primary Systems Information and any special building features (for example, HVAC Controls, Sprinkler Systems, cranes, elevators, and generators). Include photographs marked up and labeled to show key operating components and the overall facility appearance.

2.2.2.2 Basis of Design

Include the Basis of Design that shows the basic design scope of work, assumptions and the original intentions of the Designer of Record (DOR). Identify the site utility design goals, objectives, design load limits, assumptions, and system features that are critical to the operation and maintenance of the systems.

2.2.2.3 Safety Hazards

List all residual hazards identified in the Activity Hazard Analysis as prepared by the DOR. Provide recommended safeguards for each identified hazard.

2.2.2.4 Floor Plans

Provide uncluttered, legible 11 by 17 inches floor plans. Include room numbers, type or function of spaces, and overall facility dimensions on the floor plans. Do not include items such as construction instructions,

references, or frame numbers.

2.2.2.5 Floor Coverings, Wall Surfaces, and Ceiling Surfaces

Provide a table that lists by room number (including hallways and common spaces), the type, and area of finish. Include a facility summary of the total area for each type of space and floor, wall, or ceiling finish in the table.

2.2.2.6 Windows

Provide a table that lists by room number (including hallways and common spaces), the type of window, window size, number of each size and type, and special features. The table will include a facility summary of the total number for each type and size of window.

2.2.2.7 Roofing

Provide the total area of each type of roof surface and system. Provide the name of the roofing product and system; manufacturer's, supplier's, and installer's names, addresses, and phone numbers. For each type of roof, provide a recommended inspection, maintenance and repair schedule that details checkpoints, frequencies, and prohibited practices. List roof structural load limits.

2.2.2.8 HVAC Filters

Provide a table that lists the quantity, type, size, and location of each HVAC filter.

2.2.2.9 Plumbing Fixtures

Provide a table that lists by room number, the number and type of plumbing and bathroom plumbing fixtures (for example, sinks, water closets, urinals, showers and drinking fountains).

2.2.2.10 Lighting Fixtures

Provide a table that lists by room number (including hallways and common spaces), the type of lighting fixture, number of lighting fixtures, type of bulbs or tubes, and number of bulbs and tubes. The table must include a facility summary of the total number of fixtures of each type and number of bulbs or tubes of each type.

2.2.2.11 Equipment Listing

Provide a table that lists the major equipment shown on the design equipment schedules. Show the item descriptions, locations, model numbers; and the names, addresses, and telephone numbers of the manufacturers, suppliers, contractors, and subcontractors.

2.2.2.12 Supply Inventory Requirements

Provide a list of maintenance and repair supplies (e.g., spare parts, fuels and lubricants) required to ensure continued operation without unreasonable delays. Identify and list parts and supplies that have long purchase lead times. Give special consideration to facilities at remote locations.

2.2.2.13 Extended Warranty Information

List all warranties for products, equipment, components, and sub-components whose duration exceeds one year. Cross reference the list to the warranty copies provided in paragraph FACILITY INFORMATION or with the PRIMARY SYSTEMS. For each warranty listed, indicate the applicable specification section, duration, start date, end date, and the point of contact for warranty fulfillment. Also, list or reference all specific operation and maintenance procedures that must be performed to keep the warranty valid.

2.2.3 Primary Systems

The project is anticipated to include the following primary systems. Provide training and Operation and Maintenance data for all products, materials, and equipment that make up these systems in the final constructed facility.

a. HVAC facility systems (including chillers, boilers, heat pumps, air handling equipment, exhaust fans, fan coil units, VAV boxes, heart recovery wheels, hot and chilled water hydronic systems, control valves, and backflow preventers)

b. Direct Digital Controls/Space Temperature Controls.

c. Steam condensate pumps, Steam pressure relief valves.

d. Electrical systems (including transformers, diesel electric generator sets, automatic transfer switches, primary switchgear, secondary switchgear, high voltage switches, variable frequency drives, and frequency converters).

e. Fire protection systems and fire alarm detection systems.

f. Cathodic protection.

g. Site civil water utilities (including water, storm water collection, and treatment systems).

h. Site civil wastewater utilities (including pumping station, tanks, treatment and filters).

i. Potable water systems (including wells, tanks, pumps, back-flow preventers, filters, disinfection, and controllers).

j. Site electrical utilities (including substations, transformers, and pad-mounted switchgear).

2.2.3.1 Primary Systems Information

Primary Systems Information requires using a systems approach. This approach requires that consideration be given to the entire system (that is, the interfaces of equipment, connections and material flow within the system). Use Notes, Cautions and Warnings throughout the Primary Systems Information to emphasize important and critical instructions and procedures. Provide the following information for each system:

a. Operation

(1) System Description - Provide a detailed discussion of the system composition and operation. Include technical details that are essential for an understanding of the system.

(2) Start-Up and Shutdown Procedures - Provide step by step instructions to bring systems from static to operational configurations and from operating to shutdown status.

(3) Normal and Emergency Operating Instructions - Provide a discussion of the normal and emergency operation and control of the system. Address operating norms (for example, temperatures, pressures, and flow rates) expected at each zone or phase of the system. Supplement the discussion with control and wiring diagrams and data. Include shutdown instruction for fires, explosions, spill, or other contingencies.

(4) System Flow Diagrams - Provide a flow diagram indicating system liquid, air or gas flow during normal operations. Integrate all system components into the diagram. A compilation of non-integrated, flow diagrams for the individual system components are not acceptable.

(5) Field Test Reports - Provide Field Test Reports (SD-06) that apply to equipment associated with the system. The eOMSI Manual Submittal does not require the second season HVAC testing.

(6) Operator Servicing Requirements - Provide instructions for services to be performed by the operator such as lubrication, adjustments, and inspection.

(7) Valve List - Provide a list of all valves associated with the system. Show valve type, identification number,

function, location and normal operating position.

(8) Operating Log - Provide forms, samples, and instructions for keeping necessary operating records.

2.2.3.2 Troubleshooting Guides and Diagnostic Techniques

Provide step-by-step procedures for isolating the cause of system malfunctions. Clearly state indications or symptoms of trouble; the sequential instructions, including checks and tests to be performed and conditions to be sought, to determine the cause; and remedial measures to bring the equipment and system to operating condition. Identify special test equipment required to perform the procedures. Start the troubleshooting guide at the system level and proceed to a level where detailed manufacturer's troubleshooting procedures for equipment and components can be referenced. Provide clear references to repair procedures included in the manufacturer's Product Data.

2.2.3.3 Repair

Provide in accordance with paragraph CORRECTIVE MAINTENANCE (REPAIR) and its subparagraphs in Section 01 78 24.00 20 FACILITY ELECTRONIC OPERATION AND MAINTENANCE DATA SUPPORT INFORMATION (eOMSI). Provide repair
procedures and instructions required for restoring equipment to proper operating condition and standards. References must be specific as to location within the eOMSI Mannual.

2.2.4 eOMSI FACILITY DATA WORKBOOK

Download the eOMSI Facility Data Workbook at the following location: http://www.wbdg.org/ccb/NAVGRAPH/graphtoc.pdf. Complete the KTR Facility Data File tab based on the selection of master systems, systems, and subsystems installed. The following tabs are included in the eOMSI Facility Data File Workbook and serve the purpose stated:

a. Instructions Tab: Instructions for completing Model & Facility Data Matrix Tab and KTR Facility Data File.

b. Model & Facility Data Matrix Tab: - The Matrix lists Required Asset Fields for each SYSTEM and SUBSYSTEM defined within the project scope of work. In column "In Scope," choose "Yes" or "No" to define SYSTEMS and SUBSYSTEMS that are within the project scope, and that Contractor needs to include and populate in KTR Facility Data File tab. Check Box on if BIM is required for the project. For BIM projects, Columns for "DISCIPLINE," LOD," "DESIGN MODEL GRADE," and "RECORD MODEL GRADE," are pre-populated and indicate the level of detail required in the design model. These columns disappear for projects that are not BIM. The "Required Facility Asset Field Position Numbers," one through eighteen, are pre-populated, and are not editable.

c. Required Asset Fields Tab: Defines the 18 Required Facility Asset Field Position Numbers used in Model and Facility Data Matrix and KTR Facility Data File tabs.

d. KTR Sample Facility Data File Tab: Sample KTR eOMSI facility data file. This spreadsheet shows an example of the mandatory fields of

all equipment to be included in the KTR eOMSI Facility Data File, along with their descriptions.

e. KTR Facility Data File Tab: Required eOMSI facility data file deliverable provided to the Government. Provide a separated and unique new row for each facility component or piece of equipment installed.

PART 3 EXECUTION

3.1 eOMSI TRAINING

Prior to acceptance of the facility by the Contracting Officer for Beneficial Occupancy, the eOMSI Manual Files (Bookmarked PDF) and eOMSI Facility Data Workbook (Excel) preparer must provide comprehensive training for the systems and equipment of the facility specified in the technical specifications. The trainees must include the Facilities Management Specialist, maintenance staff, and applicable building occupants. Coordinate, schedule, and ensure that training is completed. Instructors must be well-versed in the particular systems that they are presenting. Address all aspects of the eOMSI Manual and Facility Data Workbook submittal. The training team must include at least a mechanical engineer and an electrical engineer. Provide instruction on site at a location approved by the Contracting Officer.

3.1.1 Training Plan

Submit a written training plan to the Contracting Officer for approval at least 60 calendar days prior to the scheduled training. Indicate prior approval of the training plan by the Quality Control Manager (QC) on the

submittal forwarded to the Contracting Officer. Also, coordinate the training schedule with the Contracting Officer, QC and CA. Include within the plan the following elements:

a. Equipment included in training

b. Intended audience

c. Location of training

d. Dates of training

e. Objectives

f. Outline of the information to be presented and subjects covered including description

g. Start and finish times and duration of training on each subject

h. Methods (e.g. classroom lecture, video, site walk-through, actual operational demonstrations, written handouts)

i. Instructor names and instructor qualifications for each subject

j. List of texts and other materials required to support training

3.1.2 Training Content

The core of this training must be based on manufacturer's recommendations and the operation and maintenance information defined in this section.
The QC is responsible for overseeing and approving the content and adequacy of the training. Provide a brief summary of "Facility Information" and a more detailed presentation of, "Primary Systems Information". Spend 95 percent of the instruction time during the presentation on the "Primary Systems Information". Include the following for each Primary system training presentation:

a. Start-up, normal operation, shutdown, unoccupied operation, seasonal changeover, manual operation, controls set-up and programming, troubleshooting, and alarms.

b. Relevant health and safety issues.

c. Discussion of how the feature or system is environmentally responsive. Advise adjustments and optimizing methods for energy conservation.

d. Design intent.

e. Use of O&M Manual Files.

f. Review of control drawings and schematics.

g. Interactions with other systems.

h. Special maintenance and replacement sources.

i. Tenant interaction issues.

3.1.3 Training Outline

Provide the eOMSI Manual Files (Bookmarked PDF) and eOMSI Facility Data Workbook and a written course outline listing the major and minor topics to be discussed by the instructor on each day of the course to each trainee in the course. Provide the course outline 14 calendar days prior to the training.

3.1.4 Training Video Recording

Provide to the Contracting Officer two copies of the training course in DVD video recording format. Capture within the recording, in video and audio, all instructors' training presentations including question and answer periods with the trainees. Confirm proposed software used to create the training is compatible with the using activity resources to play the training materials. The recording camera(s) must be attended by a person during the recording sessions to assure proper size of exhibits and projections during the recording are visible and readable when viewed as training.

3.1.5 Unresolved Questions from Trainees

If, at the end of the training course, there are questions from trainees that remain unresolved, the instructor must send the answers, in

writing, to the Contracting Officer for transmittal to the trainees, and the training video must be modified to include the appropriate clarifications.

3.1.6 Validation of Training Completion

Ensure that each attendee at each training session signs a class roster daily to confirm Government participation in the training. At the completion of all training, submit a signed validation letter that includes a sample record of training for reporting what systems were included in the training, who provided the training, when and where the training was performed, and copies of the signed class rosters. Provide two copies of the validation to the Contracting Officer, and one copy to the eOMSI Preparer for inclusion into the eOMSI documentation.

3.1.7 Quality Control Coordination

Coordinate the eOMSI training with the QC in Section 01 45 00.05 20 DESIGN AND CONSTRUCTION QUALITY CONTROL FOR DESIGN-BUILD.

3.2 FIELD VALIDATION

Perform the field validation at the intervals indicated below. Establish the field validation date, to ensure the availability of Government representatives.

The purpose of the validation is to discuss final requirements needed to complete the eOMSI submittals and to conduct field verification. Field validation is used to verify the accuracy and completeness of the eOMSI Submittals.

3.2.1 eOMSI Manual Files Field Validation

Perform the eOMSI Manual field validation when construction is 90 percent complete. This includes verifying that the systems and equipment in the eOMSI submittal accurately reflect the as-built conditions; verifying that

O&M procedures are appropriate for the systems and equipment that they support; and verifying that equipment nomenclature and system configurations are accurate.

3.2.2 eOMSI Facility Data Workbook Field Validation

Perform the eOMSI Facility Data Workbook Field Validation at 50 percent and 90 percent construction complete. Provide Field verification of KTR Facility Data File tab for equipment that is easily accessible and does not require deconstruction of installed systems.

For each of the 5 Master Systems below, provide and verify at least 5 (dissimilar if possible) SubSystems or Subitems for a total of 25 line items. For each item, verify that each Required Facility Asset Field, as defined in the Model & Facility Data Matrix tab, is populated and that each Asset Field contains the specified data per the Required Asset Fields tab. Field verify that the data for each item is correct.

a. D10 - CONVEYING

b. D20 - PLUMBING

c. D30 - HVAC

d. D40 - FIRE PROTECTION

e. D50 - ELECTRICAL

100 percent accuracy of all required asset fields is mandatory for successful Field Validation of eOMSI Facility Data Workbook. If errors are discovered during Field Validation, provide and reschedule a follow-on field verification meeting.

-- End of Section --

eOMSI Facility Data Workbook

Date: September 25th, 2014

TABLE OF CONTENTS

1. General Workbook Overview
- **1.1** Model & Facility Data Matrix Tab
- **1.2** Required Asset Fields Tab
- **1.3** KTR (Construction Contractor) Sample Facility Data File Tab
- **1.4** KTR (Construction Contractor) Facility Data File Tab

2. Model and Facility Data Matrix Instructions
- **2.1** Model & Facility Data Matrix Tab Overview
- **2.2** Non-BIM Project Instructions
- **2.3** BIM Project Instructions

3. KTR Facility Data File Instructions
- **3.1** Facility Data File Overview
- **3.2** Non-BIM Project Instructions

1. General Workbook Overview

1.1 Model & Facility Data Matrix Tab

This tab shall be used to identify the **MASTERSYSTEM**, **SYSTEM** and **SUBSYSTEM** based on the project scope. This tab is to be completed by the **Designer of Record** (DOR) and **Public Works** (PW) **Facility Management Specialist** (FMS).

1.2 Required Asset Fields Tab

Provides explanations for each of the **17 Required Asset Fields**.

1.3 KTR (Construction Contractor) Sample Facility Data File Tab

This spreadsheet shows an example of a partially completed **KTR Facility Data File** illustrating the mandatory fields to be completed.

1.4 KTR (Construction Contractor) Facility Data File Tab

This spreadsheet is to be completed by the **KTR** and submitted to the Government per the project scope.

2. Model & Facility Data Matrix Instructions

2.1 Model & Facility Data Matrix Tab Overview

The **Model & Facility Data Matrix** tab has two sections:

Section 1 - MASTERSYSTEM, SYSTEM, SUBSYSTEM Name

Section 2 - Required Facility Asset Fields

MASTERSYSTEM, SYSTEM, SUBSYSTEM Name Section

MODEL AND FACILITY DATA MATRIX

STEP 1:	Is This a BIM Project?	1 No	
STEP 2:	Select **Yes** or **No** in **Column E** for each **MASTERSYSTEM**, **SYSTEM** and **SUBSYSTEM** that is **In** the **Project Scope**	2 In Scope (Yes or No)	1

3 CLASSIFICATION ID	MASTERSYSTEM / SYSTEM / SUBSYSTEM Name 4	5 System Type	6 UOM		AssetNum
A10	A10 - FOUNDATIONS	MASTERSYSTEM	•	No	
A1010	A1010 - STANDARD FOUNDATIONS	SYSTEM	•	No	
A1010110	A1010110 - STRIP FOOTINGS	SUBSYSTEM	LF	No	
A1010210	A1010210 - SPREAD FOOTINGS	SUBSYSTEM	EA	No	
A1010250	A1010250 - PILE CAPS	SUBSYSTEM	EA	No	
A1020	A1020 - SPECIAL FOUNDATIONS	SYSTEM	•	No	
A102005	A102005 - RAFT FOUNDATIONS	SUBSYSTEM	CY	No	
A1020110	A1020110 - CIP CONCRETE PILES	SUBSYSTEM	EA	No	
A1020120	A1020120 - PRECAST CONCRETE PILES	SUBSYSTEM	EA	No	
A1020130	A1020130 - STEEL PIPE PILES	SUBSYSTEM	EA	No	
A1020140	A1020140 - STEEL H PILES	SUBSYSTEM	EA	No	
A1020160	A1020160 - TREATED WOOD PILES	SUBSYSTEM	EA	No	
A1020210	A1020210 - GRADE BEAMS	SUBSYSTEM	LF	No	
A1030	A1030 - SLAB ON GRADE	SYSTEM	•	No	
A1030120	A1030120 - PLAIN/REINFORCED	SUBSYSTEM	SF	No	
A1030999	A1030999 - OTHER	SUBSYSTEM	SF	No	

1	Identifies if the project is a BIM project ("**Yes**" or "**No**") Editable: **Yes** Edited By: **DOR**
2	Indicates if the **MASTERSYSTEM**, **SYSTEM** or **SUBSYSTEM** is within the Scope of the project ("**Yes**" or "**No**") Editable: **Yes** Edited By: **DOR**
3	This is the **UNIFORMAT ID** and is used for organization only Editable: **No**
4	The **MASTERSYSTEM**, **SYSTEM** or **SUBSYSTEM** names that will be used to populate the **MASTERSYSTEM**, **SYSTEM** and **SUBSYSTEM** cells in the **KTR Facility Data File** Editable: **No**
5	**System Type** is used for organization only Editable: **No**
6	Unit of Measure (**UOM**) Editable: **No**

2.1 Model & Facility Data Matrix Tab Overview (cont.)

Required Facility Asset Fields Section

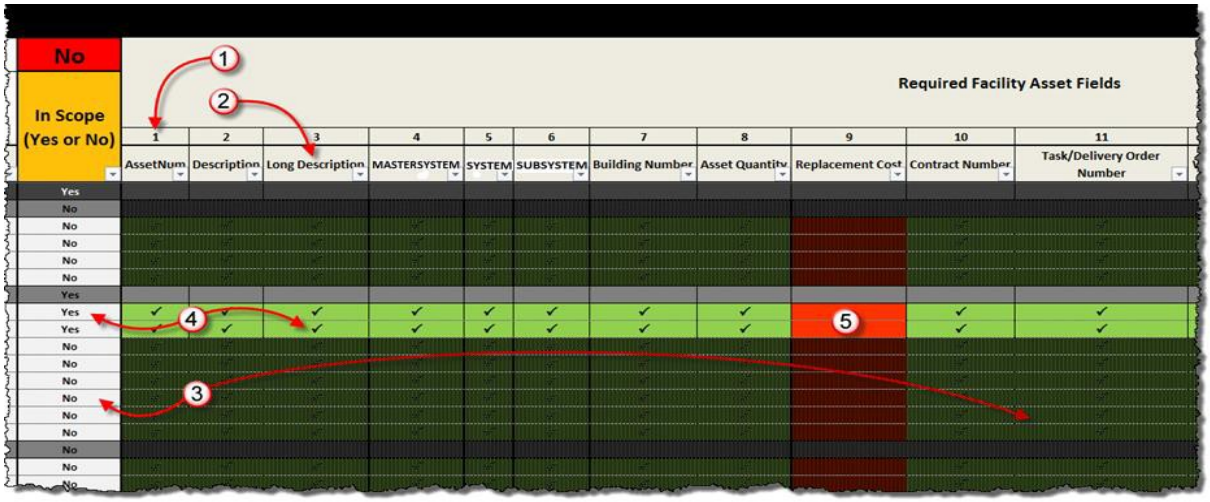

1	**Facility Asset Field** position number
2	Required **Asset Field Name**
3	Grayed out row indicates that the **MASTERSYSTEM**, **SYSTEM** or **SUBSYSTEM** is not in the scope of the project (**In Scope** cell is "**No**"). Setting the **In Scope** cell to "**No**" will automatically gray out the corresponding **Required Facility Asset Fields**.
4	**Green** cell with "**P**" indicates that the **SUBSYSTEM** is included in the Project Scope (**In Scope** cell is "**Yes**") and that **Asset Field** is required.
5	**Red** cell indicates that the **Asset Field** is not required regardless of **In Scope** cell value ("**Yes**" or "**No**").

2.2 Non-BIM Project Instructions

1 Select "**No**" in the **Is This a BIM Project** cell.

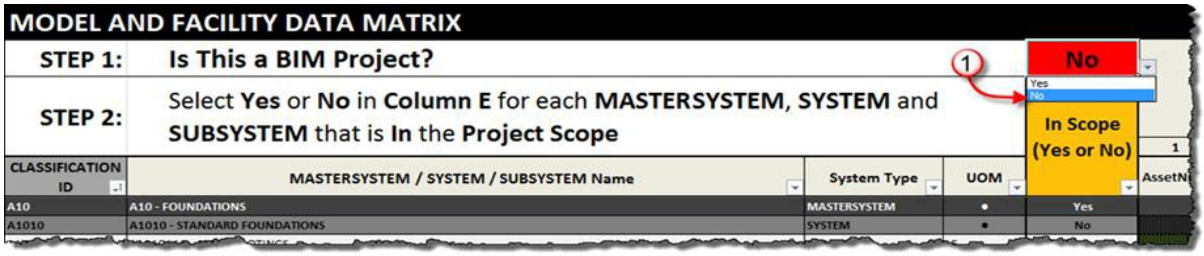

2 For each **MASTERSYSTEM**, **SYSTEM** and **SUBSYSTEM*** that is in the project scope, select "**Yes**" for the **In Scope** cell. When a **SUBSYSTEM*** is set to "**Yes**", the **DOR** shall also set the corresponding **SYSTEM** and **MASTERSYSTEM** cell to "**Yes**".

Critical Note:

SUBSYSTEM*

For design elements or features that do not match a specific **SUBSYSTEM** in the **Model & Facility Data Matrix** tab, the **DOR** shall establish a separate "non-match" list for coordination with the project **Public Works** (PW) **Facility Management Specialist** (FMS) to identify the appropriate **SUBSYSTEM**(s)**.**

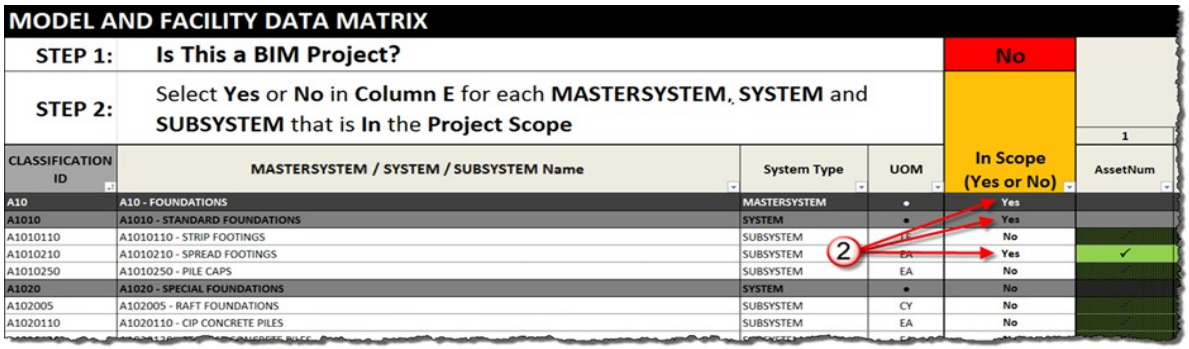

2.2 Non-BIM Project Instructions (cont.)

Notes:

a	The **DOR** shall refine the list throughout the Design phase of the project.
b	By completion of the Design phase, the **DOR** shall identify all **MASTERSYSTEMS, SYSTEMS** and **SUBSYSTEMS** within the scope of the project.
c	The **DOR** shall use the **Column Filter** (of the **In Scope** column) to hide all **MASTERSYSTEMS**, **SYSTEMS** and **SUBSYSTEMS** **NOT** within the scope of the project. Select the in-cell drop down of the **In Scope** ("**Yes**" or "**No**") cell and **UNCHECK** "**No**" from the list (this will hide all rows with **"No"** selected in the cell).

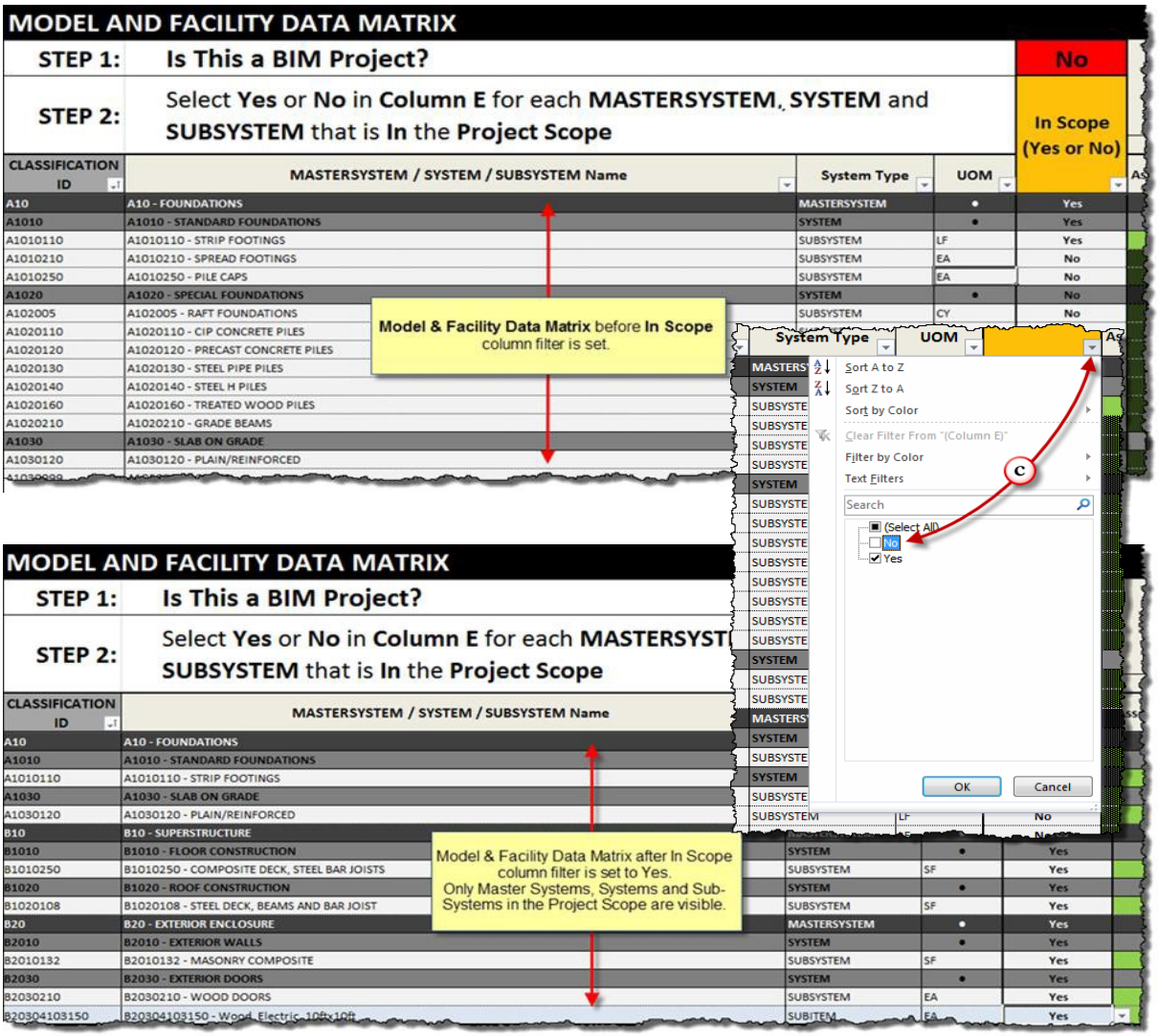

2.3 BIM Project Instructions

BIM Model Fields Overview

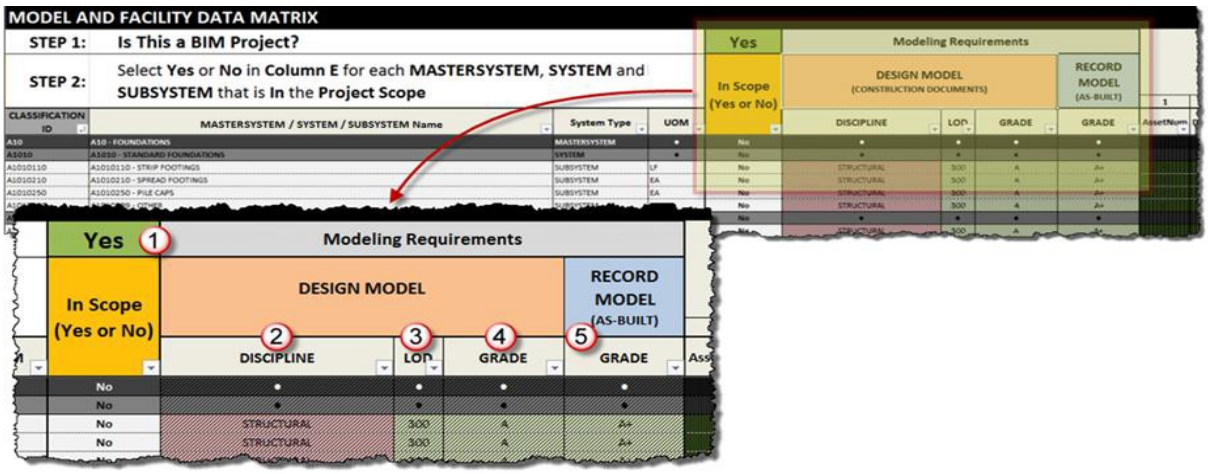

1	Identifies that the **Model and Facility Data Matrix** is a **BIM Project**.
	Editable: **Yes** Edited By: **DOR**
2	Identifies the design discipline responsible for authoring the **SUBSYSTEM** (Model Elements) in the **DESIGN MODEL**.
	Editable: **No** Edited By: **DOR**
3	Defines the **Level of Detail** (**LOD**) for each **SUBSYSTEM** (Model Elements) for the **DESIGN MODEL**.
	Editable: **No** Edited By: **DOR**
4	Defines the **GRADE** for each **SUBSYSTEM** (Model Elements) for the **DESIGN MODEL**.
	Editable: **No** Edited By: **DOR**
5	Defines the **GRADE** for each **SUBSYSTEM** (Model Elements) for the **RECORD MODEL** (**AS-BUILT**).
	Editable: **No** Edited By: **DOR**

DOR Instructions

1. Select "**Yes**" for **STEP 1** (**Is This a BIM Project**) cell. This will expand the **Modeling Requirements** fields.

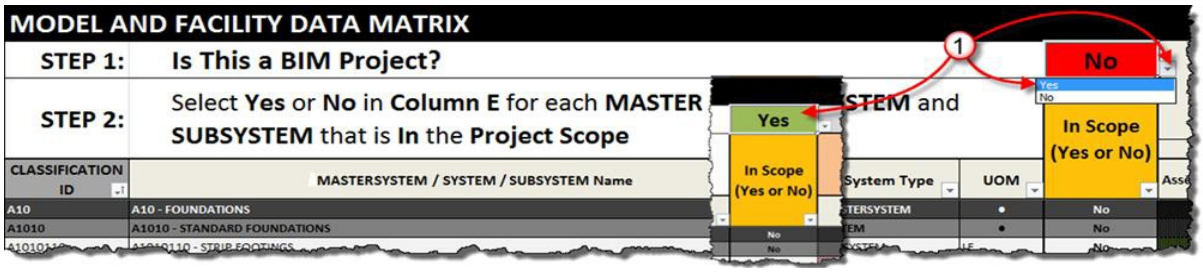

2. Follow instructions for identifying the **MASTERSYSTEM, SYSTEM** or **SUBSYSTEM** defined in **2.2 Non-BIM Project Instructions**.

3. For each **SUBSYSTEM** in the project scope ("**Yes**" in the **In Scope** cell), identifies the **DISCIPLINE** responsible for authoring the **SUBSYSTEM** (Model Elements) in the **DESIGN MODEL**.

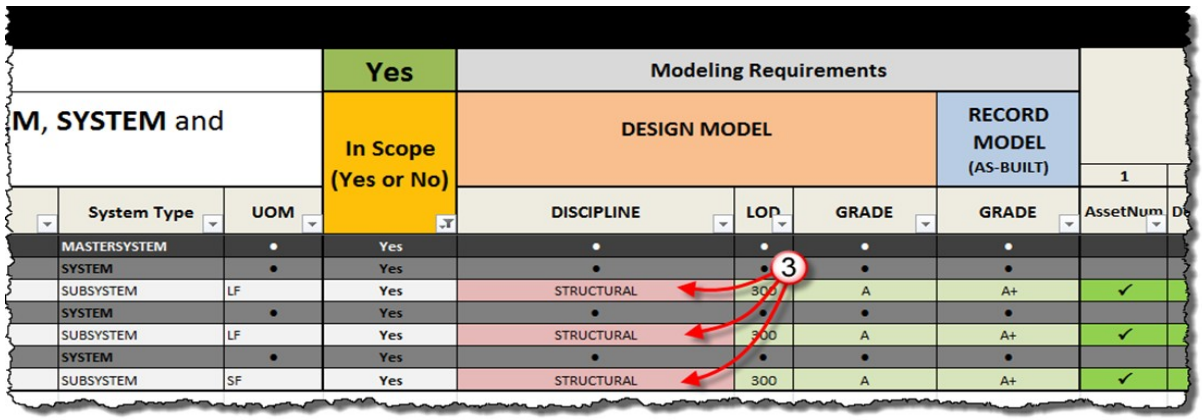

4. For each **SUBSYSTEM** in the project scope **("Yes**" in the **In Scope** cell), identifies the **LOD** for each **SUBSYSTEM** (Model Elements) for the **DESIGN MODEL**. Refer to the **Level of Detail (LOD)** chart below for LOD descriptions.

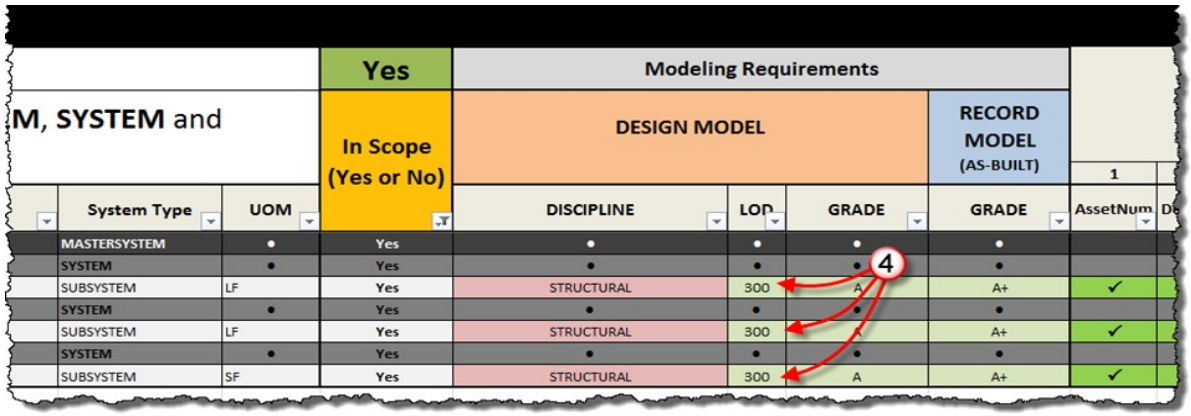

LEVEL OF DETAIL (LOD) - ACCURACY

The following LOD descriptions identify the specific element requirements for each **SUBSYSTEM**.

LOD	DESCRIPTION
•	Not a modeled element but an organizational grouping that is not being modeled. (Used for categories that have multiple sub-elements for which varying LOD apply).
100	Model Elements indicative of area, height, volume, location, and orientation may be modeled geometrically or represented by other data (i.e., a pump would be a cube).
200	Model Elements are modeled as generalized systems or assemblies with approximate quantities, size, shape, location, and orientation. Non-geometric information may also be attached to Model Elements (i.e., a pump would be a generic pump of approximate size).
300	Model Elements are modeled as specific assemblies accurate in terms of quantity, size, shape, location, and orientation. Non-geometric information may also be attached to Model Elements. Accurate to the degree dimensioned or indicated on contract documents (i.e., a pump would be a generic pump of accurate size complete with connections and clearances for a complete system).

5 For each **SUBSYSTEM** in the project scope ("**Yes**" in the **In Scope** cell), select the **Grade** for each **SUBSYSTEM** (Model Elements) for the **DESIGN MODEL** and **RECORD MODEL** (**AS-BUILT**). Refer to the **Element Grade** chart below for grade descriptions.

M, SYSTEM and			Yes	Modeling Requirements					
			In Scope (Yes or No)	DESIGN MODEL			RECORD MODEL (AS-BUILT)		
	System Type	UOM		DISCIPLINE	LOD	GRADE	GRADE	1 AssetNum	D
	MASTERSYSTEM	•	Yes	•	•	•	•		
	SYSTEM	•	Yes	•	•	•	•		
	SUBSYSTEM	LF	Yes	STRUCTURAL	300	A	A+	✓	
	SYSTEM	•	Yes	•	•	•	•		
	SUBSYSTEM	LF	Yes	STRUCTURAL	300	A	A+	✓	
	SYSTEM	•	Yes	•	•	•	•		
	SUBSYSTEM	SF	Yes	STRUCTURAL	300	A	A+	✓	

5

ELEMENT GRADE - FORMAT

Within each LOD, there is the potential to represent information in various **GRADE** formats (2D or 3D).

Grade	Description
A	3D + Required Facility Asset Fields (***applies to design and record model***)
B	2D + Required Facility Asset Fields (***applies to design and record model***)
C	2D Only (Drafting, linework, text, and or part of an assembly) (***applies to design and record model***)
+	Original Grade (A, B, or C) adjusted for contract changes and field conditions. (***applies to record model only***)
-	Not included in or tied to the model (however is still required in the deliverable) (***applies to record model only***)
•	Not a modeled element but an organizational grouping that is not being modeled.

3. KTR Facility Data File Instructions

3.1 Facility Data File Overview

KTR FACILITY DATA FILE

Each facility component or piece of equipment will be a new row. Refer to Model & Facility Data Matrix for guidance on which fields are applicable to specific components & equipment.

Position	1	2	3	4	5	6
Name	AssetNum	Description	Long Description	MASTERSYSTEM	SYSTEM	SUBSYSTEM
Explanation	Asset identification used by the KTR to uniquely identify assets or equipment (e.g. FAN001, AHU00	Primary Asset Name (100 Character Limit) To be completed by KTR	Additional Relevant Information (e.g. size, capacity, limits, etc...) (1000 Character Limit) To be completed by KTR	Reference values from Model & Facility Data Matrix tab (MASTERSYSTEM) Selected By DOR	Reference values from Model & Facility Data Matrix tab (SYSTEM) Selected By DOR	Reference values from Model & Facility Data Matrix tab (SUBSYSTEM) Selected By DOR

1	Defines the order of the **Asset Fields** Editable: **No**
2	Name of each **Asset Field** Editable: **No**
3	Is a brief explanation of the information to be included in the **Asset Field** and the party responsible for providing the information. Editable: **No**
4	Data populated by the **KTR** for each **SUBSYSTEM** installed in the project. Editable: **Yes** Edited By: **DOR**

3.2 Non-BIM Project Instructions

1 The **KTR** shall "copy and paste" the **MASTERSYSTEM**, **SYSTEM** and **SUBSYSTEM** names from the **Model & Facility Data Matrix** tab (completed by the **DOR**) to the corresponding cells in the **KTR Facility Data File** tab.

MODEL AND FACILITY DATA MATRIX

STEP 1:	**Is This a BIM Project?**
STEP 2:	Select **Yes** or **No** in **Column E** for each **MASTERSYSTEM**, **SYSTEM** and **SUBSYSTEM** that is **In** the **Project Scope**

CLASSIFICATION ID	MASTERSYSTEM / SYSTEM / SUBSYSTEM Name	System Type
A10	A10 - FOUNDATIONS	MASTERSYSTEM
A1010	A1010 - STANDARD FOUNDATIONS	SYSTEM
A1010110	A1010110 - STRIP FOOTINGS	SUBSYSTEM
A1010210	A1010210 - SPREAD FOOTINGS	SUBSYSTEM

Copy Copy Copy

1 1 1

KTR FACILITY DATA FILE

guidance on which fields are applicable to specific components & equipment.

ption	4	5	6	
	MASTERSYSTEM	SYSTEM	SUBSYSTEM	Build
evant g. size, etc...) Limit) To by KTR	Reference values from Model & Facility Data Matrix tab (MASTERSYSTEM) Selected By DOR	Reference values from Model & Facility Data Matrix tab (SYSTEM) Selected By DOR	Reference values from Model & Facility Data Matrix tab (SUBSYSTEM) Selected By DOR	Curren MAXIMO work. Wi GVT for
	A10 - FOUNDATIONS	A1010 - STANDARD FOUNDATIONS	A1010110 - STRIP FOOTINGS	WNY-212
	A10 - FOUNDATIONS	A1030 - SLAB ON GRADE	A1030120 - PLAIN/REINFORCED	WNY-212
	A20 - BASEMENT CONSTRUCTION	A2020 - BASEMENT WALLS	A2020110 - CIP CONCRETE	WNY-212

Paste Paste Paste

3.2 Non-BIM Project Instructions (cont.)

2 For the remaining asset fields, the **KTR** shall refer to the **Required Facility Asset Fields** section in the **Model & Facility Data Matrix** (completed by **DOR**) to identify required fields for each **SUBSYSTEM.** The **KTR** shall populate the corresponding cells in the **KTR Facility Data File** tab.

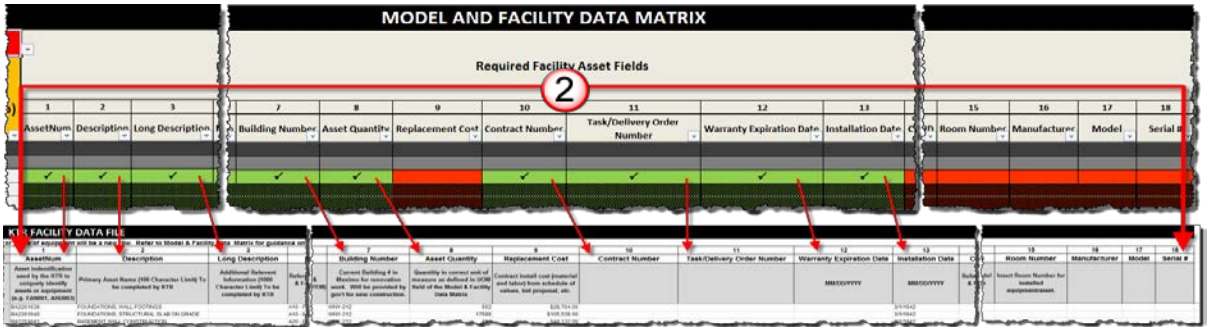

Notes:

(a) Refer to the **KTR Sample Facility Data File** tab.

Part 3 Statement of Work / Project Program – Building 1

Table of Contents

CHAPTERS

1. PROJECT DESCRIPTION

2. PROJECT OBJECTIVES

3. SITE ANALYSIS

4. BUILDING REQUIREMENTS

5. ROOM REQUIREMENTS (Not Used)

6. ENGINEERING SYSTEMS REQUIREMENTS

B30 Roofing
C10 Interior Construction
C20 Stairs
C30 Interior Finishes
D10 Conveying Systems
D20 Plumbing
D30 HVAC
D40 Fire Protection Systems
D50 Electrical Power and Lighting
E10 Equipment
E20 Furnishings
F10 Special Construction
F20 Selective Building Demo
G10 Site Preparations
G20 Site Improvements
G30 Site Civil/Mechanical Utilities
G40 Site Electrical Utilities

All work described in this section is included as part of the BASE BID Package.

1.0 PROJECT DESCRIPTION

1.1 Overview

A new Industrial Controls System (ICS) infrastructure is currently planned for JNTEXP Little Creek. The ICS will provide a secure network where Direct Digital Control (DDC), Advanced Metering Infrastructure (AMI) and Supervisory Control and Data Acquisition (SCADA) systems will be accessible from a single location by operations staff. (The ICS installation and programming are not part of this contract.)

As part of this projects development, Building 1 has gone through retro-commissioning for HVAC and DDC systems. This project includes the scope required for the installation of new DDC control points. Additionally, the project includes a number of corrective actions and energy conservation measures (ECMs) which will improve overall facility operations and energy efficiency.

1.2 Project Components

The scope for Building 1 includes:

- HVAC
  - Repairs/Improvements
  - Additional Control Points
- Hot Water System Repairs
- Chilled Water System Repairs
- Chiller Repairs
- Boiler Repairs
- Steam System Repairs
- Insulation/Piping Repairs
- BAS/EMS Logic Repairs

2.0 PROJECT OBJECTIVES

The overall ICS project is designed to provide a secure network where key utility and building performance data will be accessible from a single location; to provide improvements at Building 1 to feed into this new secure network; and to provide energy savings.

The portion of the project executed under this contract will provide improvements at buildings to allow them to feed into this new secure network, and provide energy savings. These savings are intended, through Navy funding programs, to establish a payback for the entire project.

2.1 Applicable Codes and Standards

In addition to the codes and standards listed in Part 4, the design and construction shall be in accordance with the latest revision/edition of the DoD Unified Facilities Criteria (UFC). The term "Latest Revision/Edition" is defined as the version as of the project award date.

Unified Federal Criteria (UFC)

- UFC 1-200-01, General Building Requirements, with Change 3
- UFC 1-200-02, High Performance Sustainable Buildings
- FC 1-300-09N, Navy and Marine Corps Design Procedures, with Change 2
- UFC 2-000-05N, Facility Planning for Navy and Marine Corps Shore Installations, (formerly known as P-80)
- UFC 3-400-02, Design: Engineering Weather Data
- UFC 3-400-10N, Mechanical Engineering, with Change 1
- UFC 3-410-02N, Heating, Ventilating, Air Conditioning and Dehumidifying Systems, with Change 2
- UFC 3-410-04N, Industrial Ventilation
- UFC 3-420-01, Plumbing Systems, with Change 10
- UFC 3-450-01, Noise and Vibration Control
- UFC 3-501-01, Electrical Engineering
- UFC 3-520-01, Interior Electrical Systems
- UFC 3-530-01, Design: Interior, Exterior Lighting and Controls, with Change 1
- UFC 3-550-01, Exterior Electrical Power Distribution, with Change 1
- UFC 3-560-01, Electrical Safety, O&M, with Change 5
- UFC 3-570-02N, Electrical Engineering Cathodic Protection
- UFC 3-580-01, Telecommunications Building Cabling Systems Planning and Design
- UFC 3-580-10, Navy and Marine Corps Intranet (NMCI) Standard Construction Practices, with Changes 1-3
- UFC 3-600-01, Fire Protection Engineering for Facilities, with Change 3
- UFC 4-010-01, DoD Minimum Antiterrorism Standards for Buildings, with Change 1
- UFC 4-010-02, DoD Minimum Standoff Distances for Buildings

Refer to UFGS 01 33 10.05 20 for additional information regarding applicable UFC documents.

Additional Standards

- NFPA 70

2.2 Sustainable Design

Design and construct project per sustainability requirements identified in Section 01 33 29.05 20, Sustainability Requirements For Design-Build. Additional specific sustainability requirements are found in this document.

2.3 Stormwater Management - Low Impact Development (LID)

Not applicable – project scope does not include any site work.

3.0 SITE ANALYSIS

3.1 Workflow Process

The Contractor shall develop a working schedule in coordination with NAVFAC Mid-Atlantic. The working schedule shall include design of all elements of the project and commissioning. The Contractor shall coordinate his work with on-going base activities.

The Contractor shall be responsible for preparing, submitting and obtaining all permits that may be required by the Commonwealth of Virginia, the local government, SHPO, and other jurisdictional entities for work under this contract.

The Contractor is also responsible for preparing, submitting, and obtaining air pollution control permits, as necessary, with NAVFAC.

The Contractor shall consult with NAVFAC and JNTEXP Little Creek to establish staging and lay-down areas that shall minimize disruption to activities adjacent to the site. Refer to Part 2 of this RFP for details.

4.0 BUILDING REQUIREMENTS

4.1 EXISTING CONDITIONS

Building 1 is a two story facility built in 1964. The facility is used for training and administration, and is equipped with an auditorium, gymnasium, classrooms, and general office spaces. The building is approximately 50,600 square feet. The original building consisted primarily of the west area of the facility, with the east end being added during renovations. HVAC systems have been operating separately between building sides, while some overlap occurs with the perimeter heating/cooling units in the office areas.

There are three roof top units that serve the west side of Building 1. In addition, Building 1 is also served by water-to-water heat pumps, steam hot water converter, and several 2-pipe perimeter fan coil units and above ceiling fan coil units. The east side of Building 1 is served by three air handling units, and several above ceiling fan coil units. Exhaust and relief air is provided by exhaust fans and dampers. Approximately 100% of the facility equipment is operated by electric/electronic controls.

The interior lighting consists primarily of T8 and U-tube fluorescent lamps, with 2x4, lay in, parabolic and diffuser fixtures. In addition, the facility also uses surface mounted and lay-in, 2 lamp T8 fluorescent fixtures, and 2x2 indirect, lay-in, 2 lamp fluorescent fixtures. The exterior lighting of the building includes metal halide, recessed, and high-bay fixtures. A number of incandescent and halogen pendent fixtures were also present at the facility. Motion sensor controls were not installed in the building.

Equipment in the building was found to be in need of routine maintenance and cleaning. In addition, the gymnasium was not being air conditioned properly, and the cooling tower had noticeable leakage. High humidity was found to be a problem throughout the building due to poor performing equipment.

4.2 PROJECT SCOPE

Contractor shall conduct the following corrective actions identified in the scope column of each of the system tables.

The contractor shall, for any hydronic system that is mentioned below, install 4 temperature and 4 pressure gauges and ensure proper communication to the BAS.

Upon completion of corrective actions, the contractor shall then re-commission the affected systems identified in the corrective actions. Contractor shall utilize the Functional Performance Tests which will be provided to sucessful bidder. Testing shall be conducted on systems identified in the above tables and will test system DDC control components involved with temperature settings, air flow volume, air quality, percent outside air volume, humidity, and all other pertinent parameters. Testing shall emphasize the assessment of individual mechanical component performance and response to DDC commands, as well as how the entire system interactively functions in order to pinpoint operational flaws and the best opportunities for optimization.

Once installation of new equipment and functional performance testing is completed, the contractor shall hire an independent third-party NEBB certified Test & Balance firm to conduct testing and balancing on all air and water side systems that have had work performed on them as part of this contract.

**For all activities, where DDC personnel are required, the contractor shall contact the NAVFAC PWD DDC personnel. The DDC personnel shall be notified 10 business days prior to any activities, where DDC assistance is required. The contractor shall not access, make adjustments or make changes to any DDC related components without prior authorization from the DDC POC.

HVAC

Issue	Tag	Quantity	Existing Condition	Scope
001	RTU-3	1	When RTU-3 demands heat, P-9 is ON and valve opens, but P-6 FAILs. No reheat is possible for RTU-3.	Replace motor on P-6 (3HP).
002	HVU-1 & 2	2	The steam valves on the HVU units do not seem to close 100% when commanded, leaving the unit internal temperatures to be +120F when the unit is off. This results in an inrush of extremely warm air to the space when the unit energizes.	Replace the steam valve (1”) and pneumatic actuator for HVU-1 & 2.
003	RTU-3	1	Unit indicates a clogged filter alarm, even after new filters were installed.	Replace filter air pressure gauge.
004	RTU-3	1	The return air duct does not include a control damper for economizer. The OA damper is a 2-position damper.	Install a return air damper with fully modulating actuators, and replace the OA damper actuator with new fully modulating actuator. Add 4 BAS points.
005	Perimeter Units	26	Perimeter units not properly functioning.	Replace 26 (3-5ton) perimeter VAV units and Fan Coil units.
006	Gymnasium Diffusers	24	Gymnasium units do not properly condition space.	Replace diffusers (2 units, 24 diffusers total) to better condition air near floor of gymnasium. Adjust motor and sheaves to increase unit airflow.
007	RTU3	1	The fresh air hood for RTU3 has restricted air flue. The return duct is too close (~7”) to the POE. Guarding is not secure.	Add new F/A hood 60"x24"x24".
008	HVU-2	3 LF	HVU-2 filter seal door leaks.	Install foam stripping to ensure firm seal.
009	Perimeter Units	50000 SF	New Perimeter units will require ductwork modifications	Rework existing ductwork for new perimeter units.

Chilled Water System

Issue	Tag	Quantity	Existing Condition	Scope
001	CT-OLD	1	The “Old Condenser Water System 1” cooling tower Evapco Model #LSWA-58A2 has reached the end of its useful life.	Replace cooling tower.
002	CT-NEW	1	The float valve fills when spray nozzles circulate water.	Replace valve and configure float to not fill at existing basin level.
003	CWP	1	5HP pump is leaking and inlet temperature gauge is faulty.	Replace pump and temperature gauge.
004	CWP	1	Existing CWP motor is 7.5hp dual temperature pump motor.	Replace existing pump motor with equivalent, high efficiency unit. Provide BAS points to control/monitor the systems’ operation including at a minimum the following functions: status, flowrate.

Insulation/Piping Repairs

Issue	Tag	Quantity	Existing Condition	Scope
001	Mechanical Room	100 LF	CHW insulation is in poor condition.	Replace 100 LF of chilled water pipe insulation.

BAS/EMS Logic Repairs

Issue	Tag	Quantity	Existing Condition	Scope
001	RTU-1 & 2	2	Unit does not have a clogged filter alarm.	Install a differential pressure switch and connect to the BAS.
002	RTU-1	1	Pump P-9 is shown on the graphics, however the pump in the logic as connected to RTU-1 operating is P-7.	Revise BAS graphic.
003	HVU-1 & 2	2	HVUs do not have a clogged filter alarm.	Install a differential pressure switch and connect to the BAS.
004	RTU-1	1	When RTU-1 shuts OFF when satisfied on CO2 levels, the heating/cooling setpoints are reset to the unoccupied setpoints, although the unit is still in occupied mode. The 100% OA unit with not run/heat/cool without a call for CO2 setpoint. Unoccupied setpoints are 90F/40F for cooling/heating.	Change logic and unoccupied setpoints on the BAS to ensure that space is appropriately conditioned.
005	RTU-3	1	RTU-3 responded properly to	Install a new BAS capable

			the alarm but was not indicated on the BAS.	freeze stat and map to the BAS.
006	B-1 & 2	2	Hot water pumps were running when B-1 and B-2 were off.	Reprogram pumps to only run when boilers are on.
007	AHU-1	6	The air handler serving the woman's locker room is not on the ALC system.	Add AHU-1 to the BAS.
008	Perimeter Units	26	New Perimeter Units require new DDC connections	Install BAS controls and programming for new perimeter units.

5.0 ROOM REQUIREMENTS

Not Used.

6.0 ENGINEERING SYSTEMS REQUIREMENTS (ESR)

B30 Roofing – *Not Used*
C10 Interior Construction – *Not Used*
C20 Stairs – *Not Used*
C30 Interior Finishes
D10 Conveying Systems – *Not Used*
D20 Plumbing– *Not Used*
D30 HVAC
D40 Fire Protection Systems
D50 Electrical Power and Lighting
E10 Equipment– *Not Used*
E20 Furnishings– *Not Used*
F10 Special Construction
F20 Selective Building Demo– *Not Used*
G10 Site Preparations– *Not Used*
G20 Site Improvements– *Not Used*
G30 Site Civil/Mechanical Utilities– *Not Used*
G40 Site Electrical Utilities

C30 INTERIOR FINISHES

C3010 WALL FINISHES

All interior concrete masonry partitions shall be painted.

Unless noted otherwise, all interior gypsum board wall partitions shall be painted gypsum board.

C3020 FLOOR FINISHES

Not Used.

C3030 CEILING FINISHES

Primary ceiling finish shall be 24 inch by 24 inch by 5/8 inch minimum thickness suspended acoustical panel ceiling system, except provide a suspended gypsum board ceiling in entrance lobby, and restrooms.

Ceiling finish material shall be painted gypsum board.

C3040 INTERIOR COATINGS AND SPECIAL FINISHES

Where any new surfaces are required (i.e., due to cutting/patching for HVAC work), paint to match previously painted interior surfaces. Surfaces requiring painting may include walls, doors, trim, ceilings as well as all interior exposed metal items, to include interior grilles, registers, diffusers, access panels, and panel boxes.

D30 HVAC

HVAC System Requirements

Provide air conditioning and heating for spaces as indicated and for the following Design conditions:

Outside Conditions

Summer	91	Degrees F dry bulb		21	Degrees F
	76	Degrees F wet bulb			

Inside Conditions

Summer	23.8	Degrees C dry bulb	Winter	20	Degrees C
	75	Degrees F dry bulb		68	Degrees F
	50	%RH			

Heating & Ventilating Inside Conditions

Summer	80	Degrees F dry bulb		55	Degrees F
	6	[Air changes per hour]			

Provide Ventilation rates and systems per the latest edition of ASHRAE Standard 62, *Ventilation for Acceptable Indoor Air Quality*.

The HVAC system shall provide each zone with the choice of heating or cooling year round unless otherwise indicated. Each zone shall have its own limited range of control, as allowed by the control system central workstation.

Provide protective coatings on casings and coils which come in contact with outside air.

D3020 HEAT GENERATING SYSTEMS

Boilers

Equipment Thermal Insulation
Provide Insulation for hot and chilled water pumps and equipment. Provide vapor barrier for chilled water applications.

D3030 COOLING GENERATING SYSTEMS

Chilled Water Systems

Provide connection to and extension of the existing central chilled water system for service to the building HVAC equipment.

Provide heat recovery for reheat.

D3040 DISTRIBUTION SYSTEMS

Air Distribution, Heating & Cooling

Provide insulated, galvanized steel ductwork. Provide double wall, preinsulated ductwork in public areas when exposed.

Provide aluminum grilles, registers, and diffusers. Provide filter grilles for return air.

Water Distribution Systems
Provide modifications to maintain operaable hot and chilled water system to serve the HVAC equipment throughout the facility.

Air Handling Units
Provide variable volume air handlers. Provide with 50% filters.

Other Distribution Systems
Provide base mounted circulating pumps with VFD drives to operate in conjunction with new pressure sensors

Chilled Water and Hot Water Distribution Systems
Install Variable Frequency Drives (VFDs) on chilled water and hot water pumps identified in Chapter 4. Replace pumps as necessary if not compatible with VFDs. Replace electric motors on all pumps to be equipped with VFDs.

Variable frequency drives shall be located within 20 feet of the pumps.

Factory-assembled variable frequency drive control systems for variable speed control.

All pump VFD's shall be from the same manufacturer. Each VFD shall include motor starter, motor disconnects and controls as required for a complete system.

Units shall be UL-listed and comply with the National Electric Code.

The pump motor shall be NEMA premium efficient TEFC motor, inverter duty, specifically designed and insulated for variable speed pump duty. Provide ceramic bearings and shaft grounding ring to protect motor bearings from variable frequency drive induced currents.

The motor shall have a minimum 1.15 service factor and the service factor beyond shall not be considered available for the load.

Motor and pump shall be statically and dynamically balanced for variable speed operation between 20 percent and 100 percent of full speed.

D3050 TERMINAL & PACKAGE UNITS

Fan Coil Units

Provide horizontal or vertical type fan coils and controls to match existing.

D3060 CONTROLS AND INSTRUMENTATION

HVAC Controls

Provide a partial direct digital control (DDC) system which will communicate with the existing DDC system. The existing DDC system was manufactured by Automated Logic.

DDC Control points shall be added to each piece of equipment indicated in Chapter 4 and programmed to be operated and monitored via the existing DDC system.

New or replacement equipment installed by contractor shall have at minimum the following control points

Air handling units

- Supply air temperature
- Return air temperature
- Outside air temperature (can be a global point)
- All post coil temperatures (air temperature after each coil)
- Fan speed or VFD Hrtz
- Fan status
- Filter Differential Pressure (DP)
- Return air CO2 concentrations
- Outside air CO2 (can be a global point)
- Hydronic valve positions
- Outside Air damper position
- Return Air damper position
- Relief Air damper position

Terminal air units

- Damper position
- Zone temperature set point
- Zone temperature
- Zone CO2

- Fan status (if fan present)
- Supply air temperature
- Hydronic valve position

Hydronic HVAC pumps

- Pump status
- VFD speed
- Pump status
- Pump Delta P (Pressure)

Boiler

- Hot water supply temperature(s)
- Hot water return temperature(s)
- Boiler status
- Hot water flow

Exhaust fans

- Status
- Speed or cfm(if applicable)

The installed BAS system shall have the ability to perform trending and data gathering consistent with the demands of the client. New control points will require the use of existing Automated Logic controllers or the installation of new controllers.

D3070 SYSTEMS TESTING AND BALANCING

Provide complete Testing and Balancing (TAB) of all new or modified air and water distribution systems and HVAC equipment. The contractor is responsible for hiring an independent third-party NEBB certified Test & Balance firm to perform independent inspections, testing, re-balancing and verification of the air and water distribution systems.

Systems to be commissioned include, but are not limited to the following systems: HVAC systems, HVAC control systems, hot water systems, DDC systems, and Testing, Adjusting and Balancing.

D40 FIRE PROTECTION SYSTEMS

D4010 FIRE ALARM AND DETECTION SYSTEMS

Maintain the existing associated interlocks and operation of the fire alarm/mass notification system protocol/sequencing for monitoring and control functions associated with the existing equipment. Ensure compliance with UFC and NFPA criteria.

D50 ELECTRICAL

The electrical design shall comply with the design criteria specified in UFC 3-501-01, *Electrical Engineering*, and its referenced documents.

D5010 ELECTRICAL SERVICE & DISTRIBUTION

Provide an insulated equipment grounding conductor in all raceways for systems operating at greater than 50 volts.

Panelboards shall comply with UL 67 and UL 50.

Provide molded case circuit breakers in accordance with UL 489.

Fusible Disconnect Switches: Heavy Duty, Single Throw: UL 98 and NEMA KS 1, Type HD
Nonfusible Disconnect Switches: Heavy Duty, Single Throw: UL 98, Type HD.

Full-Voltage Magnetic Controllers: Full voltage, non-reversing, electrically held.

Combination Magnetic Controller: Fusible disconnecting means, and with auxiliary contacts.

D5020 LIGHTING & BRANCH WIRING

Not Used.

G40 SITE ELECTRICAL UTILITIES
G4010 ELECTRICAL DISTRIBUTION

The electrical design shall comply with the design criteria specified in UFC 3-501-01, Electrical Engineering.

All primary distribution systems must be designed as four wire, multi-grounded systems that are wye connected at the source transformer. A system grounded neutral conductor must be provided throughout the system. Equipment intended to interrupt current at fault levels must have interrupting ratings sufficient for the nominal circuit voltage and the current that is available at the line terminals of the equipment.

Equipment foundation pads must be 200 mm (8 in) thick; pre-cast concrete pads can be used. Ensure a minimum of 3 m (10 ft) clear workspace in front of pad-mounted equipment for hot stick work. Provide bollards in areas where equipment is subject to vehicular damage.

Part 3 Statement of Work / Project Program – Building 112

Table of Contents

CHAPTERS

1. PROJECT DESCRIPTION

2. PROJECT OBJECTIVES

3. SITE ANALYSIS

4. BUILDING REQUIREMENTS

5. ROOM REQUIREMENTS (Not Used)

6. ENGINEERING SYSTEMS REQUIREMENTS

B30 Roofing
C10 Interior Construction
C20 Stairs
C30 Interior Finishes
D10 Conveying Systems
D20 Plumbing
D30 HVAC
D40 Fire Protection Systems
D50 Electrical Power and Lighting
E10 Equipment
E20 Furnishings
F10 Special Construction
F20 Selective Building Demo
G10 Site Preparations
G20 Site Improvements
G30 Site Civil/Mechanical Utilities
G40 Site Electrical Utilities

All work described in this section is included as part of the BASE BID Package.

1.0 PROJECT DESCRIPTION

1.1 Overview

A new Industrial Controls System (ICS) infrastructure is currently planned for JNTEXP Little Creek. The ICS will provide a secure network where Direct Digital Control (DDC), Advanced Metering Infrastructure (AMI) and Supervisory Control and Data Acquisition (SCADA) systems will be accessible from a single location by operations staff. (The ICS installation and programming are not part of this contract.)

As part of this projects development, Building 112 has gone through retro-commissioning for HVAC and DDC systems. This project includes the scope required for the installation of new DDC control points. Additionally, the project includes a number of corrective actions and energy conservation measures (ECMs) which will improve overall facility operations and energy efficiency.

1.2 Project Components

The scope for Building 112 includes:

- HVAC
  - Repairs/Improvements
  - Additional Control Points
- Chilled Water System Repairs
- Chiller Repairs
- BAS/EMS Logic Repairs

2.0 PROJECT OBJECTIVES

The overall ICS project is designed to provide a secure network where key utility and building performance data will be accessible from a single location; to provide improvements at Building 112 to feed into this new secure network; and to provide energy savings.

The portion of the project executed under this contract will provide improvements at buildings to allow them to feed into this new secure network, and provide energy savings. These savings are intended, through Navy funding programs, to establish a payback for the entire project.

2.1 Applicable Codes and Standards

In addition to the codes and standards listed in Part 4, the design and construction shall be in accordance with the latest revision/edition of the DoD Unified Facilities Criteria (UFC). The term "Latest Revision/Edition" is defined as the version as of the project award date.

Unified Federal Criteria (UFC)

- UFC 1-200-01, General Building Requirements, with Change 3
- UFC 1-200-02, High Performance Sustainable Buildings
- FC 1-300-09N, Navy and Marine Corps Design Procedures, with Change 2
- UFC 2-000-05N, Facility Planning for Navy and Marine Corps Shore Installations, (formerly known as P-80)
- UFC 3-400-02, Design: Engineering Weather Data
- UFC 3-400-10N, Mechanical Engineering, with Change 1
- UFC 3-410-02N, Heating, Ventilating, Air Conditioning and Dehumidifying Systems, with Change 2
- UFC 3-410-04N, Industrial Ventilation
- UFC 3-420-01, Plumbing Systems, with Change 10
- UFC 3-450-01, Noise and Vibration Control
- UFC 3-501-01, Electrical Engineering
- UFC 3-520-01, Interior Electrical Systems
- UFC 3-530-01, Design: Interior, Exterior Lighting and Controls, with Change 1
- UFC 3-550-01, Exterior Electrical Power Distribution, with Change 1
- UFC 3-560-01, Electrical Safety, O&M, with Change 5
- UFC 3-570-02N, Electrical Engineering Cathodic Protection
- UFC 3-580-01, Telecommunications Building Cabling Systems Planning and Design
- UFC 3-580-10, Navy and Marine Corps Intranet (NMCI) Standard Construction Practices, with Changes 1-3
- UFC 3-600-01, Fire Protection Engineering for Facilities, with Change 3
- UFC 4-010-01, DoD Minimum Antiterrorism Standards for Buildings, with Change 1
- UFC 4-010-02, DoD Minimum Standoff Distances for Buildings

Refer to UFGS 01 33 10.05 20 for additional information regarding applicable UFC documents.

Additional Standards

- NFPA 70

2.2 Sustainable Design

Design and construct project per sustainability requirements identified in Section 01 33 29.05 20, Sustainability Requirements For Design-Build. Additional specific sustainability requirements are found in this document.

2.3 Stormwater Management - Low Impact Development (LID)

Not applicable – project scope does not include any site work.

3.0 SITE ANALYSIS

3.1 Workflow Process

The Contractor shall develop a working schedule in coordination with NAVFAC Mid-Atlantic. The working schedule shall include design of all elements of the project and commissioning. The Contractor shall coordinate his work with on-going base activities.

The Contractor shall be responsible for preparing, submitting and obtaining all permits that may be required by the Commonwealth of Virginia, the local government, SHPO, and other jurisdictional entities for work under this contract.

The Contractor is also responsible for preparing, submitting, and obtaining air pollution control permits, as necessary, with NAVFAC.

The Contractor shall consult with NAVFAC and JNTEXP Little Creek to establish staging and lay-down areas that shall minimize disruption to activities adjacent to the site. Refer to Part 2 of this RFP for details.

4.0 BUILDING REQUIREMENTS

4.1 EXISTING CONDITIONS

Building 112 is a one story facility used for administration and file storage. The facility was originally constructed as an ordinance storage area, but has been converted to include office spaces. The building is approximately 16,900 square feet. The building is installed with a 4-pipe system that is connected to air cooled chillers with constant flow, and a steam to hot water heat exchanger with constant flow. Conditioned air is delivered to the spaces via an air handling unit and fan coils. Exhaust and relief air is provided by exhaust fans and relief dampers.

Approximately 50% of the facility equipment is operated by pneumatic/electric controls. The remaining 50% of the building is operated by electric/electronic controls. The lighting in the building consists primarily of 2x4, 4 lamp, diffuser, surface mount, and 2x4, 3 lamp, parabolic lay-in, T8 fluorescent fixtures. In addition 2x4, 2 lamp, T8 fluorescent and recessed CFL fixtures were also used. Motion sensors and daylighting controls were not installed on the property. The building was equipped with proper exit signs. However, no emergency lighting fixtures were installed.

The building was found to have poor control of humidity and temperature. The facility also proved to be insufficient with chilled and hot water flow. Several fan coil units were found broken, while mechanical/electrical rooms were being used as storage areas and were littered with debris, which limited access to equipment.

4.2 PROJECT SCOPE

Contractor shall conduct the following corrective actions identified in the scope column of each of the system tables.

The contractor shall, for any hydronic system that is mentioned below, install 4 temperature and 4 pressure gauges and ensure proper communication to the BAS.

Upon completion of corrective actions, the contractor shall then re-commission the affected systems identified in the corrective actions. Contractor shall utilize the Functional Performance Tests which will be provided to successful bidder. . Testing shall be conducted on systems identified in the above tables and will test system DDC control components involved with temperature settings, air flow volume, air quality, percent outside air volume, humidity, and all other pertinent parameters. Testing shall emphasize the assessment of individual mechanical component performance and response to DDC commands, as well as how the entire system interactively functions in order to pinpoint operational flaws and the best opportunities for optimization.

Once installation of new equipment and functional performance testing is completed, the contractor shall hire an independent third-party NEBB certified Test & Balance firm to conduct testing and balancing on all air and water side systems that have had work performed on them as part of this contract.

**For all activities, where DDC personnel are required, the contractor shall contact the NAVFAC PWD DDC personnel. The DDC personnel shall be notified 10 business days prior to any activities, where DDC assistance is required. The contractor shall not access, make adjustments or make changes to any DDC related components without prior authorization from the DDC POC.

HVAC

Issue	Tag	Quantity	Existing Condition	Scope
001	AHU-112	1	The AHU manual OA damper is set at a minimum position. The unit will not efficiently control CO2.	Install larger outside air duct (48” x 24”), fully modulating actuator, and map to the BAS (2 points).
002	AHU-112	1	Downstream, a second pneumatic OA damper is seized in open position.	Remove OA manual balancing damper. Consolidate both dampers and replace with electronic actuator.
003	FCU-4	1	McQuay entryway unit 4’x2’ approximately 3,000 CFM is not functioning properly.	Replace FCU-4.

Chilled Water System

Issue	Tag	Quantity	Existing Condition	Scope
001	Chiller 112	1	2HP chiller fan motor is knocking when energized. The motor might be unbalanced due to a broken bearing.	Replace motor.
002	CWPs	2	7.5HP pump motors are inefficient.	Replace motors with equivalent, high efficiency units. Provide BAS points to control/monitor the systems’ operation including at a minimum the following functions: status, flowrate.

BAS/EMS Logic Repairs

Issue	Existing Condition	Scope
001	Pneumatic system is inefficient.	Disconnect and remove existing building pneumatic controls as needed for new control system installation. Remove and dispose of old pneumatic controls control panel. Remove and dispose of pneumatic air compressor. Supply and install a direct digital control system for all equipment listed in Section 4.1. Install all control system wiring, replace all room temperature sensors, install all new control valves, damper motors, DDC controllers, etc. and configure for a complete and operable system.

5.0 ROOM REQUIREMENTS

Not Used.

6.0 ENGINEERING SYSTEMS REQUIREMENTS (ESR)

B30 Roofing – *(Not Used)*
C10 Interior Construction – *(Not Used)*
C20 Stairs – *(Not Used)*
C30 Interior Finishes
D10 Conveying Systems – *(Not Used)*
D20 Plumbing
D30 HVAC
D40 Fire Protection Systems
D50 Electrical Power and Lighting
E10 Equipment – *(Not Used)*
E20 Furnishings – *(Not Used)*
F10 Special Construction – *(Not Used)*
F20 Selective Building Demo – *(Not Used)*
G10 Site Preparations – *(Not Used)*
G20 Site Improvements – *(Not Used)*
G30 Site Civil/Mechanical Utilities – *(Not Used)*
G40 Site Electrical Utilities

C30 INTERIOR FINISHES

C3010 WALL FINISHES

All interior concrete masonry partitions shall be painted.

Unless noted otherwise, all interior gypsum board wall partitions shall be painted gypsum board.

C3020 FLOOR FINISHES

Not Used.

C3030 CEILING FINISHES

Primary ceiling finish shall be 24 inch by 24 inch by 5/8 inch minimum thickness suspended acoustical panel ceiling system, except provide a suspended gypsum board ceiling in entrance lobby, and restrooms.

Ceiling finish material shall be painted gypsum board.

C3040 INTERIOR COATINGS AND SPECIAL FINISHES

Where any new surfaces are required (i.e., due to cutting/patching for HVAC work), paint to match previously painted interior surfaces. Surfaces requiring painting may include walls, doors, trim, ceilings as well as all interior exposed metal items, to include interior grilles, registers, diffusers, access panels, and panel boxes.

D20 PLUMBING

D2010 PLUMBING FIXTURES

Not Used.

D2020 DOMESTIC WATER EQUIPMENT

Insulation & Identification

Provide insulation on domestic water hot and cold supply and recirculation piping.

D2040 RAIN WATER DRAINAGE

Not Used.

D30 HVAC

HVAC System Requirements

Provide air conditioning and heating for spaces as indicated and for the following Design conditions:

Outside Conditions

Summer	91	Degrees F dry bulb		21	Degrees F
	76	Degrees F wet bulb			

Inside Conditions

Summer	23.8	Degrees C dry bulb	Winter	20	Degrees C
	75	Degrees F dry bulb		68	Degrees F
	50	%RH			

Heating & Ventilating Inside Conditions

Summer	80	Degrees F dry bulb		55	Degrees F
	6	[Air changes per hour]			

Provide Ventilation rates and systems per the latest edition of ASHRAE Standard 62, *Ventilation for Acceptable Indoor Air Quality*.

The HVAC system shall provide each zone with the choice of heating or cooling year round unless otherwise indicated. Each zone shall have its own limited range of control, as allowed by the control system central workstation.

Provide protective coatings on casings and coils which come in contact with outside air.

D3020 HEAT GENERATING SYSTEMS

Equipment Thermal Insulation
Provide Insulation for hot and chilled water pumps and equipment. Provide vapor barrier for chilled water applications.

D3030 COOLING GENERATING SYSTEMS

Not Used

D3040 DISTRIBUTION SYSTEMS

Air Distribution, Heating & Cooling

Provide insulated, galvanized steel ductwork. Provide double wall, preinsulated ductwork in public areas when exposed.

Provide aluminum grilles, registers, and diffusers. Provide filter grilles for return air.

Water Distribution Systems
Provide complete, operable hot and chilled water system to serve the HVAC equipment throughout the facility.

Other Distribution Systems
Provide base mounted circulating pumps with VFD drives to operate in conjunction with new pressure sensors

Chilled Water and Hot Water Distribution Systems
Install Variable Frequency Drives (VFDs) on chilled water and hot water pumps identified in Chapter 4. Replace pumps as necessary if not compatible with VFDs. Replace electric motors on all pumps to be equipped with VFDs.

Variable frequency drives shall be located within 20 feet of the pumps.

Factory-assembled variable frequency drive control systems for variable speed control.

All pump VFD's shall be from the same manufacturer. Each VFD shall include motor starter, motor disconnects and controls as required for a complete system.

Units shall be UL-listed and comply with the National Electric Code.

The pump motor shall be NEMA premium efficient TEFC motor, inverter duty, specifically designed and insulated for variable speed pump duty. Provide ceramic bearings and shaft grounding ring to protect motor bearings from variable frequency drive induced currents.

The motor shall have a minimum 1.15 service factor and the service factor beyond shall not be considered available for the load.

Motor and pump shall be statically and dynamically balanced for variable speed operation between 20 percent and 100 percent of full speed.

D3050 TERMINAL & PACKAGE UNITS

Fan Coil Units

Provide horizontal or vertical type fan coils and controls to match existing.

D3060 CONTROLS AND INSTRUMENTATION

HVAC Controls

Provide a partial direct digital control (DDC) system which will communicate with the existing DDC system. The existing DDC system was manufactured by Automated Logic.

DDC Control points shall be added to each piece of equipment as indicated in Chapter 4 and programmed to be operated and monitored via the existing DDC system.

New or replacement equipment installed by contractor shall have at minimum the following control points

Air handling units

- Supply air temperature
- Return air temperature
- Outside air temperature (can be a global point)
- All post coil temperatures (air temperature after each coil)
- Fan speed or VFD Hrtz
- Fan status
- Filter Differential Pressure (DP)
- Return air CO2 concentrations
- Outside air CO2 (can be a global point)
- Hydronic valve positions
- Outside Air damper position
- Return Air damper position
- Relief Air damper position

Terminal air units

- Damper position
- Zone temperature set point
- Zone temperature
- Zone CO2
- Fan status (if fan present)
- Supply air temperature
- Hydronic valve position

Hydronic HVAC pumps

- Pump status
- VFD speed
- Pump status
- Pump Delta P (Pressure)

Boiler

- Hot water supply temperature(s)
- Hot water return temperature(s)
- Boiler status
- Hot water flow

Exhaust fans

- Status

- Speed or cfm(if applicable)

The installed BAS system shall have the ability to perform trending and data gathering consistent with the demands of the client. New control points will require the use of existing Automated Logic controllers or the installation of new controllers.

D3070 SYSTEMS TESTING AND BALANCING

Provide complete Testing and Balancing (TAB) of all new or modified air and water distribution systems and HVAC equipment. The contractor is responsible for hiring an independent third-party NEBB certified Test & Balance firm to perform independent inspections, testing, re-balancing and verification of the air and water distribution systems.

Systems to be commissioned include, but are not limited to the following systems: HVAC systems, HVAC control systems, hot water systems, DDC systems, and Testing, Adjusting and Balancing.

D40 FIRE PROTECTION SYSTEMS

D4010 FIRE ALARM AND DETECTION SYSTEMS

Maintain the existing associated interlocks and operation of the fire alarm/mass notification system protocol/sequencing for monitoring and control functions associated with the existing equipment. Ensure compliance with UFC and NFPA criteria.

D50 ELECTRICAL

The electrical design shall comply with the design criteria specified in UFC 3-501-01, *Electrical Engineering*, and its referenced documents.

D5010 ELECTRICAL SERVICE & DISTRIBUTION

Provide an insulated equipment grounding conductor in all raceways for systems operating at greater than 50 volts.

Panelboards shall comply with UL 67 and UL 50.

Provide molded case circuit breakers in accordance with UL 489.

Fusible Disconnect Switches: Heavy Duty, Single Throw: UL 98 and NEMA KS 1, Type HD
Nonfusible Disconnect Switches: Heavy Duty, Single Throw: UL 98, Type HD.

Full-Voltage Magnetic Controllers: Full voltage, non-reversing, electrically held.

Combination Magnetic Controller: Fusible disconnecting means, and with auxiliary contacts.

D5020 LIGHTING & BRANCH WIRING

Not Used.

F20 SELECTIVE BUILDING DEMOLITION

F2020 HAZARDOUS COMPONENT ABATEMENT

Prior to the start of the work the ECATTS trained contractor is required to inspect the work area with the designer of record, and government representative to address existing potentially hazardous components as part of the work. The contractor is required to provide a list of hazardous components, locations and quantities that must be addressed as part of the work.

Private Qualified Person (PQP)

The Contractor is required to hire a PQP to ensure compliance with the approved work plans and perform independent inspections, testing and verification of the hazardous components work including: asbestos and lead containing paint.

G40 SITE ELECTRICAL UTILITIES

G4010 ELECTRICAL DISTRIBUTION

The electrical design shall comply with the design criteria specified in UFC 3-501-01, *Electrical Engineering*.

All primary distribution systems must be designed as four wire, multi-grounded systems that are wye connected at the source transformer. A system grounded neutral conductor must be provided throughout the system. Equipment intended to interrupt current at fault levels must have interrupting ratings sufficient for the nominal circuit voltage and the current that is available at the line terminals of the equipment.

Equipment foundation pads must be 200 mm (8 in) thick; pre-cast concrete pads can be used. Ensure a minimum of 3 m (10 ft) clear workspace in front of pad-mounted equipment for hot stick work. Provide bollards in areas where equipment is subject to vehicular damage.

Part 3 Statement of Work / Project Program – Building 3144

Table of Contents

CHAPTERS

1. PROJECT DESCRIPTION

2. PROJECT OBJECTIVES

3. SITE ANALYSIS

4. BUILDING REQUIREMENTS

5. ROOM REQUIREMENTS (Not Used)

6. ENGINEERING SYSTEMS REQUIREMENTS

B30 Roofing
C10 Interior Construction
C20 Stairs
C30 Interior Finishes
D10 Conveying Systems
D20 Plumbing
D30 HVAC
D40 Fire Protection Systems
D50 Electrical Power and Lighting
E10 Equipment
E20 Furnishings
F10 Special Construction
F20 Selective Building Demo
G10 Site Preparations
G20 Site Improvements
G30 Site Civil/Mechanical Utilities
G40 Site Electrical Utilities

All work described in this section is included as part of the BASE BID Package.

1.0 PROJECT DESCRIPTION

1.1 Overview

A new Industrial Controls System (ICS) infrastructure is currently planned for JNTEXP Little Creek. The ICS will provide a secure network where Direct Digital Control (DDC), Advanced Metering Infrastructure (AMI) and Supervisory Control and Data Acquisition (SCADA) systems will be accessible from a single location by operations staff. (The ICS installation and programming are not part of this contract.)

As part of this projects development, Building 3144 has gone through retro-commissioning for HVAC and DDC systems. This project includes the scope required for the installation of new DDC control points. Additionally, the project includes a number of corrective actions and energy conservation measures (ECMs) which will improve overall facility operations and energy efficiency.

1.2 Project Components

The scope for Building 3144 includes:

- HVAC
  - Repairs/Improvements
  - Additional Control Points
- Hot Water System Repairs
- Chilled Water System Repairs
- Chiller Repairs
- Boiler Repairs
- Steam System Repairs
- Insulation/Piping Repairs
- BAS/EMS Logic Repairs

2.0 PROJECT OBJECTIVES

The overall ICS project is designed to provide a secure network where key utility and building performance data will be accessible from a single location; to provide improvements at Building 3144 to feed into this new secure network; and to provide energy savings.

The portion of the project executed under this contract will provide improvements at buildings to allow them to feed into this new secure network, and provide energy savings. These savings are intended, through Navy funding programs, to establish a payback for the entire project.

2.1 Applicable Codes and Standards

In addition to the codes and standards listed in Part 4, the design and construction shall be in accordance with the latest revision/edition of the DoD Unified Facilities Criteria (UFC). The term "Latest Revision/Edition" is defined as the version as of the project award date.

Unified Federal Criteria (UFC)

- UFC 1-200-01, General Building Requirements, with Change 3
- UFC 1-200-02, High Performance Sustainable Buildings
- FC 1-300-09N, Navy and Marine Corps Design Procedures, with Change 2

- UFC 2-000-05N, Facility Planning for Navy and Marine Corps Shore Installations, (formerly known as P-80)
- UFC 3-400-02, Design: Engineering Weather Data
- UFC 3-400-10N, Mechanical Engineering, with Change 1
- UFC 3-410-02N, Heating, Ventilating, Air Conditioning and Dehumidifying Systems, with Change 2
- UFC 3-410-04N, Industrial Ventilation
- UFC 3-420-01, Plumbing Systems, with Change 10
- UFC 3-450-01, Noise and Vibration Control
- UFC 3-501-01, Electrical Engineering
- UFC 3-520-01, Interior Electrical Systems
- UFC 3-530-01, Design: Interior, Exterior Lighting and Controls, with Change 1
- UFC 3-550-01, Exterior Electrical Power Distribution, with Change 1
- UFC 3-560-01, Electrical Safety, O&M, with Change 5
- UFC 3-570-02N, Electrical Engineering Cathodic Protection
- UFC 3-580-01, Telecommunications Building Cabling Systems Planning and Design
- UFC 3-580-10, Navy and Marine Corps Intranet (NMCI) Standard Construction Practices, with Changes 1-3
- UFC 3-600-01, Fire Protection Engineering for Facilities, with Change 3
- UFC 4-010-01, DoD Minimum Antiterrorism Standards for Buildings, with Change 1
- UFC 4-010-02, DoD Minimum Standoff Distances for Buildings

Refer to UFGS 01 33 10.05 20 for additional information regarding applicable UFC documents.

Additional Standards

- NFPA 70

2.2 Sustainable Design

Design and construct project per sustainability requirements identified in Section 01 33 29.05 20, Sustainability Requirements For Design-Build. Additional specific sustainability requirements are found in this document.

2.3 Stormwater Management - Low Impact Development (LID)

Not applicable – project scope does not include any site work.

3.0 SITE ANALYSIS

3.1 Workflow Process

The Contractor shall develop a working schedule in coordination with NAVFAC Mid-Atlantic. The working schedule shall include design of all elements of the project and commissioning. The Contractor shall coordinate his work with on-going base activities.

The Contractor shall be responsible for preparing, submitting and obtaining all permits that may be required by the Commonwealth of Virginia, the local government, SHPO, and other jurisdictional entities for work under this contract.

The Contractor is also responsible for preparing, submitting, and obtaining air pollution control permits, as necessary, with NAVFAC.

The Contractor shall consult with NAVFAC and JNTEXP Little Creek to establish staging and lay-down areas that shall minimize disruption to activities adjacent to the site. Refer to Part 2 of this RFP for details.

4.0 BUILDING REQUIREMENTS

4.1 EXISTING CONDITIONS

Building 3144 is a single story facility that is used as an area to facilitate operations, administration, and training. The building is approximately 32,000 square feet. The HVAC system consists of a chiller and steam to hot water heat exchanger that provide cooling and heating. The building is also supported by multi-zoned air handlers.

The chiller, steam heat exchanger, air handling units, and heating ventilation units are operated by direct digital control. The lighting in the building consists of 2x4 diffuser lay-in, and 1x4 T8 fluorescent fixtures. The facility is also illuminated by high bay metal halide fixtures, and incandescent pendant mount 2x4 and 2x2 diffuser lay-in fixtures. Exit and emergency lighting were observed to be working properly. Motion sensors were found to be installed in portions of the building.

Maintenance is being performed to address emergency situations, rather than as a preventive measure. In addition, several air handling units require attention, and some areas of insulation have been altered and are no longer sufficient.

4.2 PROJECT SCOPE

Energy Conservation Measures

Chilled/Hot Water System

1. High Efficiency Motors

Replace (1) 7.5HP pump motor with equivalent, high efficiency unit. Provide BAS points to control/monitor the systems' operation including at a minimum the following functions: status, flowrate, start/stop. Dispose of removed motors following EPA as well as local codes and guidelines.

Insulation/Piping Repairs

1. Insulation – Ceiling

Remove existing, degraded insulation located on the bottom of the existing roof deck and replace with new 16,102 SF of R-19 insulation and vapor barrier[s]. Dispose of removed insulation. Undamaged insulation may remain in place but shall be modified as necessary to allow for complete insulation of the section. New insulation will serve as a vapor barrier.

2. Insulation – Pump Heads

Install removable insulation covers for (1) 7.5HP pump heads. Pump heads shall be completely enclosed. Dispose of any removed insulation. Undamaged insulation may remain in place but shall be modified as necessary to allow for complete insulation of the section.

New HVAC System

Contractor shall replace 3 existing building Multi-zone units with Variable Air Volume units. Remove existing unit located in mechanical mezzanine. Remove existing fan coil units. Remove existing ductwork. Install new ductwork from new Air handling units to HVAC system and replace with new complete and usable system. Provide new chiller water piping, piping insulation, and connections as required to connect new equipment to existing building hydronic system.

Contractor shall utilize the Functional Performance Tests which will be provided to sucessful bidder.

5.0 ROOM REQUIREMENTS

Not Used.

6.0 ENGINEERING SYSTEMS REQUIREMENTS (ESR)

B30 Roofing
C10 Interior Construction – *(Not Used)*
C20 Stairs – *(Not Used)*
C30 Interior Finishes
D10 Conveying Systems – *(Not Used)*
D20 Plumbing
D30 HVAC
D40 Fire Protection Systems
D50 Electrical Power and Lighting
E10 Equipment – *(Not Used)*
E20 Furnishings – *(Not Used)*
F10 Special Construction – *(Not Used)*
F20 Selective Building Demo – *(Not Used)*
G10 Site Preparations – *(Not Used)*
G20 Site Improvements – *(Not Used)*
G30 Site Civil/Mechanical Utilities – *(Not Used)*
G40 Site Electrical Utilities

B30 ROOFING

B3010 ROOF COVERINGS

Provide all new insulation, roof membrane, membrane flashing, sheet metal flashing materials, and accessories and incidental work necessary for a complete, new, watertight modified bitumen roof system installation.

Insulation system above roof deck shall be minimum R-20 where over environmentally interiors, but no less than that required by ASHRAE 90.1, Chapter 5 for project climate zone

B3040 ROOF WARRANTY

Provide a manufacturer no-dollar-limit 20-year watertightness warranty for the total roof system, including flashings, in accordance with referenced requirements of Standard Design-Build Template PTS B30.

Provide minimum two-year contractor warranty against defects in installation workmanship in accordance with referenced requirements of Standard Design-Build Template PTS B30. Contractor warranty shall provide for full removal and replacement of failed or defective workmanship and damaged materials, including sheet metal flashings.

B3050 ROOF SPECIFICATION AND DETAILING

All work, materials, installation and details shall be in accordance with Standard Design-Build Template PTS B30 and comply with all applicable Unified Facilities Guide Specification (UFGS) materials and installation requirements. UFGS's are referenced in PTS B30 and are available at www.ccb.org . Provide for complete rough carpentry, roof insulation, roof covering, sheet metal flashing, and other components necessary to complete the installation.

Utilize the applicable UFGS for development of the roof membrane specification. Edit for application to the specific project and compliance with the RFP. Provide complete rough carpentry, roof insulation, and sheet metal flashing specification sections coordinated and compatible with the membrane specification.

All details shall be in accordance with recommendations and guidelines of the National Roofing Contractors Association (NRCA) Roofing and Waterproofing Manual and Construction Details and as required by the RFP.

The roof system shall comply with the applicable requirements of the International Building Code. Refer to UFC 3-110-03, *Roofing*, and UFC 3-100-10, *Architecture* for additional technical requirements for the roof system to be installed.

B3060 ROOF DESIGNER REQUIREMENTS

Provide materials specification, installation requirements, and system detailing to include all flashings, penetrations, closures, corners, intersections, terminations, transitions, interfaces, joint, and lap conditions to provide for a watertight installation.

The Contractor shall utilize the services of a Registered Roof Consultant (RRC) certified by the Roof Consultants Institute, or a Registered Professional Architect or Professional Engineer either of which is knowledgeable and experienced in roof investigation, inspection, and design and specializes in roof design and roof consulting services. Consultant shall be thoroughly familiar with

the field conditions and prepare the design or provide design review and approval prior to design acceptance by the Contracting Officer. The consultant shall validate in writing familiarity with field conditions and that the design for the project is complete, in accordance with the RFP, and provides for a complete and effective roof system solution and design.

B3070 QUALITY CONTROL PROGRAM

Contractor shall establish a quality control program to assure adherence to the RFP design and construction requirements and to report on the installation quality.

C30 INTERIOR FINISHES

C3010 WALL FINISHES

All interior concrete masonry partitions shall be painted.

Unless noted otherwise, all interior gypsum board wall partitions shall be painted gypsum board.

C3020 FLOOR FINISHES

Not Used.

C3030 CEILING FINISHES

Primary ceiling finish shall be 24 inch by 24 inch by 5/8 inch minimum thickness suspended acoustical panel ceiling system, except provide a suspended gypsum board ceiling in entrance lobby, and restrooms.

Ceiling finish material shall be painted gypsum board.

C3040 INTERIOR COATINGS AND SPECIAL FINISHES

Where any new surfaces are required (i.e., due to cutting/patching for HVAC work), paint to match previously painted interior surfaces. Surfaces requiring painting may include walls, doors, trim, ceilings as well as all interior exposed metal items, to include interior grilles, registers, diffusers, access panels, and panel boxes.

D20 PLUMBING

D2010 PLUMBING FIXTURES

Not Used.

D2020 DOMESTIC WATER EQUIPMENT

Insulation & Identification

Provide insulation on domestic water hot and cold supply and recirculation piping.

D2040 RAIN WATER DRAINAGE

Not Used.

D30 HVAC

HVAC System Requirements

Provide air conditioning and heating for spaces as indicated and for the following Design conditions:

Mechanical system selection must comply with base/activity requirements and must be life cycle cost effective relative to other systems studied. RFP editor must partner with the Facilities Engineering Command (FEC) and the Public Works Department (PWD) on life cycle suitability of mechanical systems, along with system Operational, Maintenance, and Support Information (OMSI) requirements. Consider mechanical systems common to the Public Works Department in an effort to reduce associated maintenance costs. Design mechanical systems per UFC 01-200-02 High Performance and Sustainable Buildings. Consider HVAC strategies for the purpose of maximum energy savings (ie. VFD's. VAV's, Supply Air Temperature Reset, Demand Controlled Ventilation, etc.).

Outside Conditions

Summer	91	Degrees F dry bulb		21	Degrees F
	76	Degrees F wet bulb			

Inside Conditions

Summer	23.8	Degrees C dry bulb	Winter	20	Degrees C
	75	Degrees F dry bulb		68	Degrees F
	50	%RH			

Heating & Ventilating Inside Conditions

Summer	80	Degrees F dry bulb		55	Degrees F
	6	[Air changes per hour]			

Provide Ventilation rates and systems per the latest edition of ASHRAE Standard 62, *Ventilation for Acceptable Indoor Air Quality*.

The HVAC system shall provide each zone with the choice of heating or cooling year round unless otherwise indicated. Each zone shall have its own limited range of control, as allowed by the control system central workstation.

Contractor shall install VAV system with single duct and series fan powered boxes and hot water reheat. Chilled water shall be generated via air-cooled chiller(s) and meeting the minimum part load

IPLV in accordance with Federal Energy Management Program (FEMP) or Energy Star efficiency requirements. Heating system hot water shall be generated via central steam or propane/natural gas/oil fired boilers.

Provide protective coatings on casings and coils which come in contact with outside air.

D3020 HEAT GENERATING SYSTEMS

Equipment Thermal Insulation
Provide Insulation for hot and chilled water pumps and equipment. Provide vapor barrier for chilled water applications.

D3030 COOLING GENERATING SYSTEMS

Chilled Water Systems

Provide connection to and extension of the existing central chilled water system for service to the building HVAC equipment.

Provide heat recovery for reheat.

D3040 DISTRIBUTION SYSTEMS

Air Distribution, Heating & Cooling

Provide insulated, galvanized steel ductwork. Provide double wall, preinsulated ductwork in public areas when exposed.

Provide aluminum grilles, registers, and diffusers. Provide filter grilles for return air.

Water Distribution Systems
Provide complete, operable hot and chilled water system to serve the HVAC equipment throughout the facility.

Air Handling Units
Provide variable volume air handlers. Provide with 50% filters.

Other Distribution Systems
Provide base mounted circulating pumps with VFD drives to operate in conjunction with new pressure sensors

Chilled Water and Hot Water Distribution Systems
Install Variable Frequency Drives (VFDs) on chilled water and hot water pumps identified in Chapter 4. Replace pumps as necessary if not compatible with VFDs. Replace electric motors on all pumps to be equipped with VFDs.

Variable frequency drives shall be located within 20 feet of the pumps.

Factory-assembled variable frequency drive control systems for variable speed control.

All pump VFD's shall be from the same manufacturer. Each VFD shall include motor starter, motor disconnects and controls as required for a complete system.

Units shall be UL-listed and comply with the National Electric Code.

The pump motor shall be NEMA premium efficient TEFC motor, inverter duty, specifically designed and insulated for variable speed pump duty. Provide ceramic bearings and shaft grounding ring to protect motor bearings from variable frequency drive induced currents.

The motor shall have a minimum 1.15 service factor and the service factor beyond shall not be considered available for the load.

Motor and pump shall be statically and dynamically balanced for variable speed operation between 20 percent and 100 percent of full speed.

D3050 TERMINAL & PACKAGE UNITS

Not Used.

D3060 CONTROLS AND INSTRUMENTATION

HVAC Controls

Provide a partial direct digital control (DDC) system which will communicate with the existing DDC system. The existing DDC system was manufactured by Automated Logic.

DDC Control points shall be added to each piece of equipment indicated in Chapter 4 and programmed to be operated and monitored via the existing DDC system.

New or replacement equipment installed by contractor shall have at minimum the following control points

Air handling units

- Supply air temperature
- Return air temperature
- Outside air temperature (can be a global point)
- All post coil temperatures (air temperature after each coil)
- Fan speed or VFD Hrtz
- Fan status
- Filter Differential Pressure (DP)
- Return air CO2 concentrations
- Outside air CO2 (can be a global point)
- Hydronic valve positions
- Outside Air damper position
- Return Air damper position
- Relief Air damper position

Terminal air units

- Damper position
- Zone temperature set point
- Zone temperature
- Zone CO2
- Fan status (if fan present)

- Supply air temperature
- Hydronic valve position

Hydronic HVAC pumps

- Pump status
- VFD speed
- Pump status
- Pump Delta P (Pressure)

Boiler

- Hot water supply temperature(s)
- Hot water return temperature(s)
- Boiler status
- Hot water flow

Exhaust fans

- Status
- Speed or cfm(if applicable)

The installed BAS system shall have the ability to perform trending and data gathering consistent with the demands of the client. New control points will require the use of existing Automated Logic controllers or the installation of new controllers.

D3070 SYSTEMS TESTING AND BALANCING

Provide complete Testing and Balancing (TAB) of all new or modified air and water distribution systems and HVAC equipment. The contractor is responsible for hiring an independent third-party NEBB certified Test & Balance firm to perform independent inspections, testing, re-balancing and verification of the air and water distribution systems.

Systems to be commissioned include, but are not limited to the following systems: HVAC systems, HVAC control systems, hot water systems, DDC systems, and Testing, Adjusting and Balancing.

D307003 HVAC COMMISSIONING

Refer to RFP Part 3 - Project Program, Chapter 2 for Building Commissioning requirements. Mechanical systems to be commissioned, if provided, include HVAC systems and controls, refrigeration systems, hydronic systems and controls, renewable energy systems, and domestic hot water systems.

D40 FIRE PROTECTION SYSTEMS

D4010 FIRE ALARM AND DETECTION SYSTEMS

Maintain the existing associated interlocks and operation of the fire alarm/mass notification system protocol/sequencing for monitoring and control functions associated with the existing equipment. Ensure compliance with UFC and NFPA criteria.

D50 ELECTRICAL

The electrical design shall comply with the design criteria specified in UFC 3-501-01, *Electrical Engineering*, and its referenced documents.

D5010 ELECTRICAL SERVICE & DISTRIBUTION

Provide an insulated equipment grounding conductor in all raceways for systems operating at greater than 50 volts.

Panelboards shall comply with UL 67 and UL 50.

Provide molded case circuit breakers in accordance with UL 489.

Fusible Disconnect Switches: Heavy Duty, Single Throw: UL 98 and NEMA KS 1, Type HD
Nonfusible Disconnect Switches: Heavy Duty, Single Throw: UL 98, Type HD.

Full-Voltage Magnetic Controllers: Full voltage, non-reversing, electrically held.

Combination Magnetic Controller: Fusible disconnecting means, and with auxiliary contacts.

D5020 LIGHTING & BRANCH WIRING

Retrofit existing fluorescent lighting system with LED lighting including switches, automatic controls, occupancy sensors, and automatic lighting shutoff capability.

All conductors shall be copper. All wiring shall be in electrical metal conduits and shall be concealed except in the industrial spaces and at locations indicated in Part 3. No conductors shall be smaller than No. 12 AWG, copper wires. Wiring below slab or underground shall be in Schedule 40 PVC with ground wire. Exposed conduits on the exterior of the building are prohibited. Provide a ground conductor for each circuit; conduits shall not be used for grounding. Use of cable assemblies Types AC, MC, or MI and flat conductors are prohibited. Circuit breakers shall be bolt-on type. Series rated circuit breakers and fusible panelboards shall not be used.

All homerun circuits must contain no more than 3 phase conductors.

Contractor shall install lighting control and monitoring for existing lighting circuits. Lighting control system shall be compatible with existing BAS system by Automated Logic and utilize compatible controllers. Lighting control shall be installed and programmed to measure power usage, operate on/off based on timeclock setbacks and have integrated occupancy sensors for occupant overrides.

Provide dedicated power connections to all ancillary office equipment such as printers, faxes, plotters, and shredders.

F20 SELECTIVE BUILDING DEMOLITION

F2020 HAZARDOUS COMPONENT ABATEMENT

Prior to the start of the work the ECATTS trained contractor is required to inspect the work area with the designer of record, and government representative to address existing potentially hazardous components as part of the work. The contractor is required to provide a list of hazardous components, locations and quantities that must be addressed as part of the work.

Private Qualified Person (PQP)

The Contractor is required to hire a PQP to ensure compliance with the approved work plans and perform independent inspections, testing and verification of the hazardous components work including: asbestos and lead containing paint.

G40 SITE ELECTRICAL UTILITIES

G4010 ELECTRICAL DISTRIBUTION

The electrical design shall comply with the design criteria specified in UFC 3-501-01, *Electrical Engineering*.

All primary distribution systems must be designed as four wire, multi-grounded systems that are wye connected at the source transformer. A system grounded neutral conductor must be provided throughout the system. Equipment intended to interrupt current at fault levels must have interrupting ratings sufficient for the nominal circuit voltage and the current that is available at the line terminals of the equipment.

Equipment foundation pads must be 200 mm (8 in) thick; pre-cast concrete pads can be used. Ensure a minimum of 3 m (10 ft) clear workspace in front of pad-mounted equipment for hot stick work. Provide bollards in areas where equipment is subject to vehicular damage.

Part 3 Statement of Work / Project Program – Building 3147

Table of Contents

CHAPTERS

1. PROJECT DESCRIPTION

2. PROJECT OBJECTIVES

3. SITE ANALYSIS

4. BUILDING REQUIREMENTS

5. ROOM REQUIREMENTS (Not Used)

6. ENGINEERING SYSTEMS REQUIREMENTS

B30 Roofing
C10 Interior Construction
C20 Stairs
C30 Interior Finishes
D10 Conveying Systems
D20 Plumbing
D30 HVAC
D40 Fire Protection Systems
D50 Electrical Power and Lighting
E10 Equipment
E20 Furnishings
F10 Special Construction
F20 Selective Building Demo
G10 Site Preparations
G20 Site Improvements
G30 Site Civil/Mechanical Utilities
G40 Site Electrical Utilities

All work described in this section is included as part of the BASE BID Package.

1.0 PROJECT DESCRIPTION

1.1 Overview

A new Industrial Controls System (ICS) infrastructure is currently planned for JNTEXP Little Creek. The ICS will provide a secure network where Direct Digital Control (DDC), Advanced Metering Infrastructure (AMI) and Supervisory Control and Data Acquisition (SCADA) systems will be accessible from a single location by operations staff. (The ICS installation and programming are not part of this contract.)

As part of this projects development, Building 3147 has gone through retro-commissioning for HVAC and DDC systems. This project includes the scope required for the installation of new DDC control points. Additionally, the project includes a number of corrective actions and energy conservation measures (ECMs) which will improve overall facility operations and energy efficiency.

1.2 Project Components

The scope for Building 3147 includes:

- HVAC
  - Repairs/Improvements
  - Additional Control Points
- Boiler Repairs
- Insulation/Piping Repairs
- BAS/EMS Logic Repairs
- Building Repairs

2.0 PROJECT OBJECTIVES

The overall ICS project is designed to provide a secure network where key utility and building performance data will be accessible from a single location; to provide improvements at Building 3147 to feed into this new secure network; and to provide energy savings.

The portion of the project executed under this contract will provide improvements at buildings to allow them to feed into this new secure network, and provide energy savings. These savings are intended, through Navy funding programs, to establish a payback for the entire project.

2.1 Applicable Codes and Standards

In addition to the codes and standards listed in Part 4, the design and construction shall be in accordance with the latest revision/edition of the DoD Unified Facilities Criteria (UFC). The term "Latest Revision/Edition" is defined as the version as of the project award date.

Unified Federal Criteria (UFC)

- UFC 1-200-01, General Building Requirements, with Change 3
- UFC 1-200-02, High Performance Sustainable Buildings
- FC 1-300-09N, Navy and Marine Corps Design Procedures, with Change 2
- UFC 2-000-05N, Facility Planning for Navy and Marine Corps Shore Installations, (formerly known as P-80)
- UFC 3-400-02, Design: Engineering Weather Data
- UFC 3-401-01, Mechanical Engineering, with Change 1
- UFC 3-410-01, Heating, Ventilating, and Air Conditioning Systems, with Change 2
- UFC 3-410-04N, Industrial Ventilation
- UFC 3-420-01, Plumbing Systems, with Change 10
- UFC 3-450-01, Noise and Vibration Control
- UFC 3-501-01, Electrical Engineering
- UFC 3-520-01, Interior Electrical Systems
- UFC 3-530-01, Design: Interior, Exterior Lighting and Controls, with Change 1
- UFC 3-550-01, Exterior Electrical Power Distribution, with Change 1
- UFC 3-560-01, Electrical Safety, O&M, with Change 5
- UFC 3-570-02N, Electrical Engineering Cathodic Protection
- UFC 3-580-01, Telecommunications Building Cabling Systems Planning and Design
- UFC 3-580-10, Navy and Marine Corps Intranet (NMCI) Standard Construction Practices, with Changes 1-3
- UFC 3-600-01, Fire Protection Engineering for Facilities, with Change 3
- UFC 4-010-01, DoD Minimum Antiterrorism Standards for Buildings, with Change 1
- UFC 4-010-02, DoD Minimum Standoff Distances for Buildings

Refer to UFGS 01 33 10.05 20 for additional information regarding applicable UFC documents.

Additional Standards

- NFPA 70

2.2 Sustainable Design

Design and construct project per sustainability requirements identified in Section 01 33 29.05 20, Sustainability Requirements For Design-Build. Additional specific sustainability requirements are found in this document.

2.3 Stormwater Management - Low Impact Development (LID)

Not applicable – project scope does not include any site work.

3.0 SITE ANALYSIS

3.1 Workflow Process

The Contractor shall develop a working schedule in coordination with NAVFAC Mid-Atlantic. The working schedule shall include design of all elements of the project and commissioning. The Contractor shall coordinate his work with on-going base activities.

The Contractor shall be responsible for preparing, submitting and obtaining all permits that may be required by the Commonwealth of Virginia, the local government, SHPO, and other jurisdictional entities for work under this contract.

The Contractor is also responsible for preparing, submitting, and obtaining air pollution control permits, as necessary, with NAVFAC.

The Contractor shall consult with NAVFAC and JNTEXP Little Creek to establish staging and lay-down areas that shall minimize disruption to activities adjacent to the site. Refer to Part 2 of this RFP for details.

4.0 BUILDING REQUIREMENTS

4.1 EXISTING CONDITIONS

Building 3147 is a two story facility that is used as gymnasium and a fitness center. The building is approximately 71,000 square feet. The facility uses direct expansion condensing units for cooling with multiple air handling units. There are two large heating ventilation units for the main floor of the gym. The facility uses three boilers with one pump to circulate heating hot water.

The air handling units, heating ventilation units, and exhaust fans are on the DDC using electronic controls. The lighting in the building consists of 2x4 and 2x2 diffuser, T8 fluorescent fixtures. High bay 2x4, 4 to 6 lamp, T5 fluorescent fixtures were observed in gym areas. Other areas also use an assortment of 1x4 and 1x2 fluorescent, recessed CFL and recessed incandescent fixtures. Some exit and emergency lighting fixtures were not functioning properly.

Maintenance is being performed to address emergency situations, rather than as a preventive measure. In addition, several air handling units require attention, and the building humidity is excessive and uncontrolled.

4.2 PROJECT SCOPE

Contractor shall conduct the following corrective actions identified in the scope column of each of the system tables.

The contractor shall, for any hydronic system that is mentioned below, install 4 temperature and 4 pressure gauges and ensure proper communication to the BAS.

Upon completion of corrective actions, the contractor shall then re-commission the affected systems identified in the corrective actions. Contractor shall utilize the Functional Performance Tests which will be provided to successful bidder. .Testing shall be conducted on systems identified in the above tables and will test system DDC control components involved with temperature settings, air flow volume, air quality, percent outside air volume, humidity, and all other pertinent parameters. Testing shall emphasize the assessment of individual mechanical component performance and response to DDC commands, as well as how the entire system interactively functions in order to pinpoint operational flaws and the best opportunities for optimization.

Once installation of new equipment and functional performance testing is completed, the contractor shall hire an independent third-party NEBB certified Test & Balance firm to conduct testing and balancing on all air and water side systems that have had work performed on them as part of this contract.

**For all activities, where DDC personnel are required, the contractor shall contact the NAVFAC PWD DDC personnel. The DDC personnel shall be notified 10 business days prior to any activities, where DDC assistance is required. The contractor shall not access, make adjustments or make changes to any DDC related components without prior authorization from the DDC POC.

Lighting

Issue	Tag	Existing Condition	Scope
001	Outdoor Lights	Dawn-to-dusk outdoor lights are on, even when daylight is visible.	Include a sunrise/sunset sensor for lighting.

HVAC

Issue	Tag	Quantity	Existing Condition	Scope
001	AHU-1	1	The hot water supply line has been disconnected from the heating coil.	Repair/replace heating coil with new 2-way HW valve.
002	AHU-1	1	Filter DP sensor is not working properly. The sensor indicated 'clean' when the filter was clogged.	Recalibrate filter DP sensor.
003	AHU-1	1	Unit is extremely dirty.	Clean internal components of the unit.
004	AHU-2	1	OA damper is locked at 5% open. An average of over 1,000 PPM of CO2 was measured within the spaces served by AHU-2.	Repair/replace OA damper actuator to allow actuation of OA damper.
005	AHU-2	1	Condensing unit is not operating and condensing coil is extremely dirty. Stage 2 cooling is called for continuously.	Repair/replace condensing unit to have proper 2 stage DX cooling. If repairing condensing unit, clean condensing coil.
006	AHU-3	1	Actuator for hot-water valve (2-way) is locked at 90% open and was not able to actuate.	Repair/replace 2-way HW valve actuator for control of valve.
007	AHU-3	1	Condensing unit was labeled as CU-4, when the unit serves AHU-3.	Relabel condensing unit to CU-3.
008	AHU-4	1	Condensing unit is not operating properly. Unit is running when called for, but no cooling was available.	Repair/replace condensing unit to have proper DX cooling.
009	AHU-4	1	The condensing unit was found in 'HAND' and was not running. When AHU-4 was called for on the DDC, the unit ran in both 'HAND' and 'AUTO'. 'OFF' properly shut down the unit when it was running.	Rewire HOA for condensing unit to have proper HOA switch control.
010	AHU-5	1	OA damper was attempted to close completely, but was left about 10% open.	Repair damper actuation to have complete closure and complete open when called for.
Issue	**Tag**	**Quantity**	**Existing Condition**	**Scope**
011	AHU-7	1	Condensing unit has no cooling or heating available.	Repair/replace condensing unit to have proper DX

				cooling/heating.
012	AHU-8 & 9	2	Internal unit is dirty due to OA duct with no filtration.	Clean internal components of the unit.
013	AHU-10 & 12	2	Filter is extremely dirty.	Replace filter.
014	AHU-10	1	RA temperature sensor is not working properly (reading 283.1F).	Repair/replace/recalibrate RA temperature sensor.
015	HVU-1	1	Hot water valve (2-way) has a missing actuator and has continuous hot water enter the heating coil.	Install new/repaired 2-way HW valve.
016	HVU-1/2	1	Return air louver, shared by HVU-1 & HVU-2, is extremely dirty and almost completely clogged.	Clean RA louver.
017	HVU-1 & 2	8 (4/unit)	The two OA dampers, the RA damper and the face/bypass damper are all locked in position. There is no control through the DDC. One of the OA dampers is locked at 10% open and the other completely closed. The RA damper is completely opened. The face/bypass damper is locked on full face.	Repair/replace dampers and actuators.
018	HVU-1	1	Supply fan is not able to come on through HOA. Could potentially have power removed to have unit permanently off.	Correct wiring to SF HOA to have the SF run properly.
019	HVU-2	1	Supply fan HOA for ‘OFF’ does not work. The fan stops when button is help, but will enable operations once the button is released for ‘OFF’.	Correct wiring to SF HOA to have the SF run properly.
020	HVU-2	1	Heating coil is extremely dirty.	Clean heating coil.
021	AHU-3	1	Condensing coil is extremely dirty.	Clean condensing coil.

Boiler Repairs

Issue	Tag	Quantity	Existing Condition	Scope
001	B-2	1	Boiler was found in alarm for sensor fail (12 lockout). The boiler was last seen operating for a couple of days around Feb. 22 (as of 3/30).	Service boiler to correct any alarms on the boiler and restore boiler to proper operation.
002	B-3	1	Boiler was found in alarm for sensor fail (12 lockout). The boiler was last seen operating for a week around Feb. 20 (as of 3/30).	Service boiler to correct any alarms on the boiler and restore boiler to proper operation.
003	B-4	1	Boiler 4's exhaust pipe is leaking condensate due to improper leveling of exhaust pipe.	Repair boiler exhaust leveling.

Insulation

Issue	Tag	Quantity	Existing Condition	Scope
001	All CUs	12	All condensing units have missing or deteriorated insulation on refrigeration lines.	Insulate refrigerant pipes for all condensing units.

BAS/EMS Logic Repairs

Issue	Tag	Quantity	Existing Condition	Scope
001	AHU-1	1	Economizer mode is locked out in the DDC programming for AHU-1.	Investigate whether AHU-1 has OA. If it has OA, enable economizer mode.
002	AHU-2	1	Economizer mode is locked out in the DDC programming for AHU-2.	Enable economizer mode.
003	AHU-3	1	Economizer mode is locked out in the DDC programming for AHU-3.	Enable economizer mode.
004	AHU-3	1	Feedback on OA damper is not working properly. Manual adjustment to OA damper was not indicated on DDC.	Repair feedback control for OA damper.
005	AHU-4	1	Feedback on OA damper is not working properly. Manual adjustment to OA damper was not indicated on DDC.	Repair feedback control for OA damper.
006	AHU-8 & 9	2	OA duct is attached to RA duct without a filter application. OA duct is not displayed on DDC.	Correct DDC graphics to display the OA duct attached to the RA duct. Install filters for OA duct.

Issue	Tag	Quantity	Existing Condition	Scope
007	All Boilers	3	The setpoint for HWS, according to sequence, is 180F. Boilers 1 & 2 were set to 150F and Boiler 3 was at 220F.	Correct all boilers to have proper sequence setpoints of 180F.
008	All Boilers	3	The DDC cycles the boilers manually. There is an option in the DDC for automated cycling for Lead/Lag/LagLag.	Correct DDC to have automated rotations of boilers.
009	AHUs	30	There is no humidity control in the building.	Install humidity sensing points in the AHU return and supply air duct from spaces with new humidity control sequences of operation.

Building Repairs

Issue	Tag	Existing Condition	Scope
001	All Gutters	Water is currently entering the building due to faulty downspouts. The gutter attachment to underground water lines have been damaged.	Repair downspouts for gutters along with ground attachment to underground water system.
002	Envelope	The building has little to no insulation or vapor barrier on the roof. The space cannot currently maintain proper temperature or humidity control.	Remove existing insulation located on the bottom of the existing roof deck and replace with new 35500 SF of R-19 insulation and vapor barrier. Undamaged insulation may remain in place but shall be modified as necessary to allow for complete insulation of the section. New insulation will serve as a vapor barrier.

5.0 ROOM REQUIREMENTS

Not Used.

6.0 ENGINEERING SYSTEMS REQUIREMENTS (ESR)

B30 Roofing – *(Not Used)*
C10 Interior Construction – *(Not Used)*
C20 Stairs – *(Not Used)*
C30 Interior Finishes
D10 Conveying Systems – *(Not Used)*
D20 Plumbing
D30 HVAC
D40 Fire Protection Systems
D50 Electrical Power and Lighting
E10 Equipment – *(Not Used)*
E20 Furnishings – *(Not Used)*
F10 Special Construction – *(Not Used)*
F20 Selective Building Demo – *(Not Used)*
G10 Site Preparations – *(Not Used)*
G20 Site Improvements – *(Not Used)*
G30 Site Civil/Mechanical Utilities – *(Not Used)*
G40 Site Electrical Utilities

C30 INTERIOR FINISHES

C3010 WALL FINISHES

All interior concrete masonry partitions shall be painted.

Unless noted otherwise, all interior gypsum board wall partitions shall be painted gypsum board.

C3020 FLOOR FINISHES

Not Used.

C3030 CEILING FINISHES

Primary ceiling finish shall be 24 inch by 24 inch by 5/8 inch minimum thickness suspended acoustical panel ceiling system, except provide a suspended gypsum board ceiling in entrance lobby, and restrooms.

Ceiling finish material shall be painted gypsum board.

C3040 INTERIOR COATINGS AND SPECIAL FINISHES

Where any new surfaces are required (i.e., due to cutting/patching for HVAC work), paint to match previously painted interior surfaces. Surfaces requiring painting may include walls, doors, trim, ceilings as well as all interior exposed metal items, to include interior grilles, registers, diffusers, access panels, and panel boxes.

D20 PLUMBING

D2010 PLUMBING FIXTURES

Not Used.

D2020 DOMESTIC WATER EQUIPMENT

Insulation & Identification

Provide insulation on domestic water hot and cold supply and recirculation piping.

D2040 RAIN WATER DRAINAGE

Not Used.

D30 HVAC

HVAC System Requirements

Provide air conditioning and heating for spaces as indicated and for the following Design conditions:

Outside Conditions

Summer	91	Degrees F dry bulb		21	Degrees F
	76	Degrees F wet bulb			

Inside Conditions

Summer	23.8	Degrees C dry bulb	Winter	20	Degrees C
	75	Degrees F dry bulb		68	Degrees F
	50	%RH			

Heating & Ventilating Inside Conditions

Summer	80	Degrees F dry bulb		55	Degrees F
	6	[Air changes per hour]			

Provide Ventilation rates and systems per the latest edition of ASHRAE Standard 62, *Ventilation for Acceptable Indoor Air Quality*.

The HVAC system shall provide each zone with the choice of heating or cooling year round unless otherwise indicated. Each zone shall have its own limited range of control, as allowed by the control system central workstation.

Provide protective coatings on casings and coils which come in contact with outside air.

D3020 HEAT GENERATING SYSTEMS

Boilers

Equipment Thermal Insulation
Provide Insulation for hot and chilled water pumps and equipment. Provide vapor barrier for chilled water applications.

D3030 COOLING GENERATING SYSTEMS

Chilled Water Systems

Provide connection to and extension of the existing central chilled water system for service to the building HVAC equipment.

D3040 DISTRIBUTION SYSTEMS

Air Distribution, Heating & Cooling

Provide insulated, galvanized steel ductwork. Provide double wall, pre insulated ductwork in public areas when exposed.

Provide aluminum grilles, registers, and diffusers. Provide filter grilles for return air.

Water Distribution Systems
Provide complete, operable hot and chilled water system to serve the HVAC equipment throughout the facility.

Air Handling Units
Provide central station, split system, or constant volume air handlers. Provide with 50% filters.

Other Distribution Systems
Provide base mounted circulating pumps with VFD drives to operate in conjunction with new pressure sensors

D3050 TERMINAL & PACKAGE UNITS

Not Used.

D3060 CONTROLS AND INSTRUMENTATION

HVAC Controls

Provide a partial direct digital control (DDC) system which will communicate with the existing DDC system. The existing DDC system was manufactured by Automated Logic.

DDC Control points shall be added to each piece of equipment identified in Chapter 4 and programmed to be operated and monitored via the existing DDC system.

New or replacement equipment installed by contractor shall have at minimum the following control points

Air handling units

- Supply air temperature
- Return air temperature
- Outside air temperature (can be a global point)
- All post coil temperatures (air temperature after each coil)
- Fan speed or VFD Hrtz
- Fan status
- Filter Differential Pressure (DP)
- Return air CO2 concentrations
- Outside air CO2 (can be a global point)
- Hydronic valve positions
- Outside Air damper position
- Return Air damper position
- Relief Air damper position

Terminal air units

- Damper position
- Zone temperature set point
- Zone temperature
- Zone CO2
- Fan status (if fan present)
- Supply air temperature
- Hydronic valve position

Hydronic HVAC pumps

- Pump status
- VFD speed
- Pump status
- Pump Delta P (Pressure)

Boiler

- Hot water supply temperature(s)
- Hot water return temperature(s)
- Boiler status
- Hot water flow

Exhaust fans

- Status
- Speed or cfm(if applicable)

The installed BAS system shall have the ability to perform trending and data gathering consistent with the demands of the client. New control points will require the use of existing Automated Logic controllers or the installation of new controllers.

D3070 SYSTEMS TESTING AND BALANCING

Provide complete Testing and Balancing (TAB) of all new or modified air and water distribution systems and HVAC equipment. The contractor is responsible for hiring an independent third-party NEBB certified Test & Balance firm to perform independent inspections, testing, re-balancing and verification of the air and water distribution systems.

Systems to be commissioned include, but are not limited to the following systems: HVAC systems, HVAC control systems, hot water systems, DDC systems, and Testing, Adjusting and Balancing.

D40 FIRE PROTECTION SYSTEMS

D4010 FIRE ALARM AND DETECTION SYSTEMS

Maintain the existing associated interlocks and operation of the fire alarm/mass notification system protocol/sequencing for monitoring and control functions associated with the existing equipment. Ensure compliance with UFC and NFPA criteria.

D50 ELECTRICAL

The electrical design shall comply with the design criteria specified in UFC 3-501-01, *Electrical Engineering*, and its referenced documents.

D5010 ELECTRICAL SERVICE & DISTRIBUTION

Provide an insulated equipment grounding conductor in all raceways for systems operating at greater than 50 volts.

Panelboards shall comply with UL 67 and UL 50.

Provide molded case circuit breakers in accordance with UL 489.

Fusible Disconnect Switches: Heavy Duty, Single Throw: UL 98 and NEMA KS 1, Type HD
Nonfusible Disconnect Switches: Heavy Duty, Single Throw: UL 98, Type HD.

Full-Voltage Magnetic Controllers: Full voltage, non-reversing, electrically held.

Combination Magnetic Controller: Fusible disconnecting means, and with auxiliary contacts.

D5020 LIGHTING & BRANCH WIRING

Not Used.

F20 SELECTIVE BUILDING DEMOLITION

F2020 HAZARDOUS COMPONENT ABATEMENT

Prior to the start of the work the ECATTS trained contractor is required to inspect the work area with the designer of record, and government representative to address existing potentially hazardous components as part of the work. The contractor is required to provide a list of hazardous components, locations and quantities that must be addressed as part of the work.

Private Qualified Person (PQP)

The Contractor is required to hire a PQP to ensure compliance with the approved work plans and perform independent inspections, testing and verification of the hazardous components work including: asbestos and lead containing paint.

G40 SITE ELECTRICAL UTILITIES

G4010 ELECTRICAL DISTRIBUTION

The electrical design shall comply with the design criteria specified in UFC 3-501-01, *Electrical Engineering*.

All primary distribution systems must be designed as four wire, multi-grounded systems that are wye connected at the source transformer. A system grounded neutral conductor must be provided throughout the system. Equipment intended to interrupt current at fault levels must have interrupting ratings sufficient for the nominal circuit voltage and the current that is available at the line terminals of the equipment.

Equipment foundation pads must be 200 mm (8 in) thick; pre-cast concrete pads can be used. Ensure a minimum of 3 m (10 ft) clear workspace in front of pad-mounted equipment for hot stick work. Provide bollards in areas where equipment is subject to vehicular damage.

Part 3 Statement of Work / Project Program – Building 3607

Table of Contents

CHAPTERS

1. PROJECT DESCRIPTION

2. PROJECT OBJECTIVES

3. SITE ANALYSIS

4. BUILDING REQUIREMENTS

5. ROOM REQUIREMENTS (Not Used)

6. ENGINEERING SYSTEMS REQUIREMENTS

B30 Roofing
C10 Interior Construction
C20 Stairs
C30 Interior Finishes
D10 Conveying Systems
D20 Plumbing
D30 HVAC
D40 Fire Protection Systems
D50 Electrical Power and Lighting
E10 Equipment
E20 Furnishings
F10 Special Construction
F20 Selective Building Demo
G10 Site Preparations
G20 Site Improvements
G30 Site Civil/Mechanical Utilities
G40 Site Electrical Utilities

All work described in this section is included as part of the BASE BID Package.

1.0 PROJECT DESCRIPTION

1.1 Overview

A new Industrial Controls System (ICS) infrastructure is currently planned for JNTEXP Little Creek. The ICS will provide a secure network where Direct Digital Control (DDC), Advanced Metering Infrastructure (AMI) and Supervisory Control and Data Acquisition (SCADA) systems will be accessible from a single location by operations staff. (The ICS installation and programming are not part of this contract.)

As part of this projects development, Building 3607 has gone through retro-commissioning for HVAC and DDC systems. This project includes the scope required for the installation of new DDC control points. Additionally, the project includes a number of corrective actions and energy conservation measures (ECMs) which will improve overall facility operations and energy efficiency.

1.2 Project Components

The scope for Building 3607 includes:

- HVAC
  - Repairs/Improvements
  - Additional Control Points
- Chilled Water System Repairs
- Chiller Repairs
- Insulation/Piping Repairs
- BAS/EMS Logic Repairs

2.0 PROJECT OBJECTIVES

The overall ICS project is designed to provide a secure network where key utility and building performance data will be accessible from a single location; to provide improvements at Building 3607 to feed into this new secure network; and to provide energy savings.

The portion of the project executed under this contract will provide improvements at buildings to allow them to feed into this new secure network, and provide energy savings. These savings are intended, through Navy funding programs, to establish a payback for the entire project.

2.1 Applicable Codes and Standards

In addition to the codes and standards listed in Part 4, the design and construction shall be in accordance with the latest revision/edition of the DoD Unified Facilities Criteria (UFC). The term "Latest Revision/Edition" is defined as the version as of the project award date.

Unified Federal Criteria (UFC)

- UFC 1-200-01, General Building Requirements, with Change 3
- UFC 1-200-02, High Performance Sustainable Buildings
- FC 1-300-09N, Navy and Marine Corps Design Procedures, with Change 2
- UFC 2-000-05N, Facility Planning for Navy and Marine Corps Shore Installations, (formerly known as P-80)
- UFC 3-400-02, Design: Engineering Weather Data
- UFC 3-400-10N, Mechanical Engineering, with Change 1
- UFC 3-410-02N, Heating, Ventilating, Air Conditioning and Dehumidifying Systems, with Change 2
- UFC 3-410-04N, Industrial Ventilation
- UFC 3-420-01, Plumbing Systems, with Change 10
- UFC 3-450-01, Noise and Vibration Control
- UFC 3-501-01, Electrical Engineering
- UFC 3-520-01, Interior Electrical Systems
- UFC 3-530-01, Design: Interior, Exterior Lighting and Controls, with Change 1
- UFC 3-550-01, Exterior Electrical Power Distribution, with Change 1
- UFC 3-560-01, Electrical Safety, O&M, with Change 5
- UFC 3-570-02N, Electrical Engineering Cathodic Protection
- UFC 3-580-01, Telecommunications Building Cabling Systems Planning and Design
- UFC 3-580-10, Navy and Marine Corps Intranet (NMCI) Standard Construction Practices, with Changes 1-3
- UFC 3-600-01, Fire Protection Engineering for Facilities, with Change 3
- UFC 4-010-01, DoD Minimum Antiterrorism Standards for Buildings, with Change 1
- UFC 4-010-02, DoD Minimum Standoff Distances for Buildings

Refer to UFGS 01 33 10.05 20 for additional information regarding applicable UFC documents.

Additional Standards

- NFPA 70

2.2 Sustainable Design

Design and construct project per sustainability requirements identified in Section 01 33 29.05 20, Sustainability Requirements For Design-Build. Additional specific sustainability requirements are found in this document.

2.3 Stormwater Management - Low Impact Development (LID)

Not applicable – project scope does not include any site work.

3.0 SITE ANALYSIS

3.1 Workflow Process

The Contractor shall develop a working schedule in coordination with NAVFAC Mid-Atlantic. The working schedule shall include design of all elements of the project and commissioning. The Contractor shall coordinate his work with on-going base activities.

The Contractor shall be responsible for preparing, submitting and obtaining all permits that may be required by the Commonwealth of Virginia, the local government, SHPO, and other jurisdictional entities for work under this contract.

The Contractor is also responsible for preparing, submitting, and obtaining air pollution control permits, as necessary, with NAVFAC.

The Contractor shall consult with NAVFAC and JNTEXP Little Creek to establish staging and lay-down areas that shall minimize disruption to activities adjacent to the site. Refer to Part 2 of this RFP for details.

4.0 BUILDING REQUIREMENTS

4.1 EXISTING CONDITIONS

Building 3607 was built in 1973, and is approximately 28,500 square feet. The building serves as a dining and kitchen area, and also houses several support offices for residential facility. The mechanical cooling for the facility is provided by air cooled chillers. Heating is provided by direct steam from the central plant. Air handling units and heating and ventilating units distribute air throughout the building to maintain comfort level and provide make up air for the kitchen hoods. Chilled water pumps circulate cooled water required by the AHUs and the H&V units.

The facility is controlled by an Automated Logic DDC. Lighting in rooms consists of 2x2, 2x4, 1x6 and CFL florescent fixtures throughout the building. Incandescent ceiling mounted fixtures with fans were observed in the serving areas. Motion sensor controls were not installed on the property. A number of exit and emergency lighting fixtures did not work during test condition.

It was found that maintenance is being performed to address emergency situations, rather than as a preventive measure. In addition, many of the heating and ventilating units were in very poor condition.

4.2 PROJECT SCOPE

Contractor shall conduct the following corrective actions identified in the scope column of each of the system tables.

The contractor shall, for any hydronic system that is mentioned below, install 4 temperature and 4 pressure gauges and ensure proper communication to the BAS.

Upon completion of corrective actions, the contractor shall then re-commission the affected systems identified in the corrective actions. Contractor shall utilize the Functional Performance Tests which will be provided to successful bidder. . Testing shall be conducted on systems identified in the above tables and will test system DDC control components involved with temperature settings, air flow volume, air quality, percent outside air volume, humidity, and all other pertinent parameters. Testing shall emphasize the assessment of individual mechanical component performance and response to DDC commands, as well as how the entire system interactively functions in order to pinpoint operational flaws and the best opportunities for optimization.

Once installation of new equipment and functional performance testing is completed, the contractor shall hire an independent third-party NEBB certified Test & Balance firm to conduct testing and balancing on all air and water side systems that have had work performed on them as part of this contract.

**For all activities, where DDC personnel are required, the contractor shall contact the NAVFAC PWD DDC personnel. The DDC personnel shall be notified 10 business days prior to any activities, where DDC assistance is required. The contractor shall not access, make adjustments or make changes to any DDC related components without prior authorization from the DDC POC.

HVAC

Issue	Tag	Quantity	Existing Condition	Scope
001	AHU-5	1	AHU-5 is located above the ceiling and access is very limited.	Relocate unit.
002	AHU-1, 2 & 3	3	The mixed air temperature sensor for AHU-1 does not correctly read temperature.	Replace mixed air temperature sensor.
003	AHU-1	1	The outside air damper (2'x5') has corroded open at approximately 10% and the actuator does not work.	Replace damper and actuator.
004	AHU-1	1	The return air damper is open at approximately 10% and does not move.	Replace linkage and adjust damper to modulate opposite of the OAD.
005	AHU-1 & 2	2	Unit has a high limit temperature sensor with manual reset. When unit is in unoccupied mode, the steam coil heats up and when unit is started, the high limit stat is tripped.	Install an automatic reset sensor.
006	AHU-2	1	The outside air damper (2'x5') has corroded open at approximately 10%, RAD at 100% open, and the actuator does not work.	Replace damper, linkage and actuator.
007	AHU-2	1	AHU-2 interior is dirty.	Clean AHU-2.
008	AHU-3	1	The outside air damper (2'x5') has corroded open at approximately 0%, RAD at 100% open, and the actuator does not work.	Replace damper, linkage and actuator.
009	AHU-3	1	AHU-3 found with failed supply fan. Fuses appear to be bad.	Replace fuses.
010	AHU-4	1	The outside air damper (2'x5') has corroded open at approximately 0%, RAD at 100% open, and the actuator does not work.	Replace damper, linkage and actuator.
011	HV-2	1	HV-2 was found in hand, with the fan running. HV-2 is 100% outside air unit. However, outside air damper (36"x36") is broken and corroded in 100% closed position.	Replace damper, linkage and actuator.
012	AHU Fan	1	7.5 HP AHU fan motor has no VFD.	Furnish and install 1 VFD controller to 1 existing 7.5HP air handler fan motor to allow variable speed functionality. Install a pressure sensor at the furthest location to provide

				control over the variable frequency drive. New VFDs shall be connected to the existing AHU power distribution system and existing fans. Provide BAS points to control/monitor the systems' operation including at a minimum the following functions: status, static pressure, on/off, speed, alarm. Place the VFDs within 20 feet of existing equipment.

Chilled Water System

Issue	Tag	Quantity	Existing Condition	Scope
001	AHU-3	1	The AHU-3 chilled water coil valve is located on the other side of a demising wall and is not accessible from the attic space where other control valves are located.	Relocate chilled water valve adjacent to other valves.

Chiller Repairs

Issue	Tag	Quantity	Existing Condition	Scope
001	CH-1	4	The BAS CHWS/R temperature valves are approximately 10 degrees different than actual gauge temperatures.	Calibrate sensors and verify that BAS is receiving correct gauge temperatures.

Steam System Repairs

Issue	Tag	Quantity	Existing Condition	Scope
001	AHU-5	1	The 1" AHU-5 steam control valve is leaking.	Replace control valve.
002	AHU-1, 2 & 3	3	The unit steam control valve has been isolated.	Verify condition of coil and control valve. Replace control valve.
003	HV-2	1	The unit steam control valve has been isolated.	Verify condition of coil and control valve. Replace control valve.
004	System		Condensate pump and piping from pump to return pit are not functional.	Install new 3 HP duplex pump with receiver, 100 LF of 2" piping.

Insulation/Piping Repairs

Issue	Tag	Quantity	Existing Condition	Scope
012	AHU-5	50 LF	Chilled water pipe condenses and leaks above building drop ceiling.	Install 50 feet of 1.5" piping insulation.

BAS/EMS Logic Repairs

Issue	Tag	Quantity	Existing Condition	Scope
001	AHU-5	1	Economizer mode is not working.	Correct control logic and enable economizer mode.
002	AHU-1	1	AHU-1 has a CO2 sensor that is not shown on the unit graphics.	Update AHU-1 graphics to show CO2 sensor.
003	AHU-2	1	AHU-2 is programmed to cycle fan on/off upon call for heating or cooling. When unit fan is off and the space is occupied, no OA is provided to the space.	Reprogram fan to operate continuously when AHU-2 is in occupied mode to provide minimum OA.
004	AHU-2	1	During cooling, when the economizer is available, both the economizer and cooling valve work together.	Reprogram so that the economizer, if available, provides the first stage of cooling, and the cooling valve the second stage.
005	AHU-1, 2, 3, & 4	4	Graphics show an exhaust air damper, when unit does not have an exhaust air (relief air damper).	Correct graphics to accurate represent unit.
006	CH-1	1	CH-1 is controlled with mfg controls on chiller. The chilled water set point is set within local chiller controls at 51F.	Configure chiller controls to receive a remote set point from BAS and reset based on OAT.
007	FCU	1	Unit is not on the BAS.	Provide room sensor to monitor room served.
008	EF	10	Units are not on the BAS.	Provide graphics, start/stop and status.
009	MAU	8	Units are not on the BAS.	Provide graphics, start/stop and status, damper and heating valve control points.
010	CH-1	1	Currently, chiller demand limit is not adjustable at the BAS.	Provide control point to adjust chiller demand limit.

5.0 ROOM REQUIREMENTS

Not Used.

6.0 ENGINEERING SYSTEMS REQUIREMENTS (ESR)

B30 Roofing
C10 Interior Construction – *(Not Used)*
C20 Stairs – *(Not Used)*
C30 Interior Finishes
D10 Conveying Systems – *(Not Used)*
D20 Plumbing
D30 HVAC
D40 Fire Protection Systems
D50 Electrical Power and Lighting
E10 Equipment – *(Not Used)*
E20 Furnishings – *(Not Used)*
F10 Special Construction – *(Not Used)*
F20 Selective Building Demo – *(Not Used)*
G10 Site Preparations – *(Not Used)*
G20 Site Improvements – *(Not Used)*
G30 Site Civil/Mechanical Utilities – *(Not Used)*
G40 Site Electrical Utilities

B30 ROOFING

B3010 ROOF COVERINGS

Provide all new insulation, roof membrane, membrane flashing, sheet metal flashing materials, and accessories and incidental work necessary for a complete, new, watertight modified bitumen roof system installation.

Insulation system above roof deck shall be minimum R-20 where over environmentally interiors, but no less than that required by ASHRAE 90.1, Chapter 5 for project climate zone

B3040 ROOF WARRANTY

Provide a manufacturer no-dollar-limit 20-year watertightness warranty for the total roof system, including flashings, in accordance with referenced requirements of Standard Design-Build Template PTS B30.

Provide minimum two-year contractor warranty against defects in installation workmanship in accordance with referenced requirements of Standard Design-Build Template PTS B30. Contractor warranty shall provide for full removal and replacement of failed or defective workmanship and damaged materials, including sheet metal flashings.

B3050 ROOF SPECIFICATION AND DETAILING

All work, materials, installation and details shall be in accordance with Standard Design-Build Template PTS B30 and comply with all applicable Unified Facilities Guide Specification (UFGS) materials and installation requirements. UFGS's are referenced in PTS B30 and are available at www.ccb.org . Provide for complete rough carpentry, roof insulation, roof covering, sheet metal flashing, and other components necessary to complete the installation.

Utilize the applicable UFGS for development of the roof membrane specification. Edit for application to the specific project and compliance with the RFP. Provide complete rough carpentry, roof insulation, and sheet metal flashing specification sections coordinated and compatible with the membrane specification.

All details shall be in accordance with recommendations and guidelines of the National Roofing Contractors Association (NRCA) Roofing and Waterproofing Manual and Construction Details and as required by the RFP.

The roof system shall comply with the applicable requirements of the International Building Code. Refer to UFC 3-110-03, *Roofing*, and UFC 3-100-10, *Architecture* for additional technical requirements for the roof system to be installed.

B3060 ROOF DESIGNER REQUIREMENTS

Provide materials specification, installation requirements, and system detailing to include all flashings, penetrations, closures, corners, intersections, terminations, transitions, interfaces, joint, and lap conditions to provide for a watertight installation.

The Contractor shall utilize the services of a Registered Roof Consultant (RRC) certified by the Roof Consultants Institute, or a Registered Professional Architect or Professional Engineer either of which is knowledgeable and experienced in roof investigation, inspection, and design and

specializes in roof design and roof consulting services. Consultant shall be thoroughly familiar with the field conditions and prepare the design or provide design review and approval prior to design acceptance by the Contracting Officer. The consultant shall validate in writing familiarity with field conditions and that the design for the project is complete, in accordance with the RFP, and provides for a complete and effective roof system solution and design.

B3070 QUALITY CONTROL PROGRAM

Contractor shall establish a quality control program to assure adherence to the RFP design and construction requirements and to report on the installation quality.

C30 INTERIOR FINISHES

C3010 WALL FINISHES

All interior concrete masonry partitions shall be painted.

Unless noted otherwise, all interior gypsum board wall partitions shall be painted gypsum board.

C3020 FLOOR FINISHES

Not Used.

C3030 CEILING FINISHES

Primary ceiling finish shall be 24 inch by 24 inch by 5/8 inch minimum thickness suspended acoustical panel ceiling system, except provide a suspended gypsum board ceiling in entrance lobby, and restrooms.

Ceiling finish material shall be painted gypsum board.

C3040 INTERIOR COATINGS AND SPECIAL FINISHES

Where any new surfaces are required (i.e., due to cutting/patching for HVAC work), paint to match previously painted interior surfaces. Surfaces requiring painting may include walls, doors, trim, ceilings as well as all interior exposed metal items, to include interior grilles, registers, diffusers, access panels, and panel boxes.

D20 PLUMBING

D2010 PLUMBING FIXTURES

Not Used.

D2020 DOMESTIC WATER EQUIPMENT

Insulation & Identification

Provide insulation on domestic water hot and cold supply and recirculation piping.

D2040 RAIN WATER DRAINAGE

Not Used.

D30 HVAC

HVAC System Requirements

Provide air conditioning and heating for spaces as indicated and for the following Design conditions:

Outside Conditions

Summer	91	Degrees F dry bulb		21	Degrees F
	76	Degrees F wet bulb			

Inside Conditions

Summer	23.8	Degrees C dry bulb	Winter	20	Degrees C
	75	Degrees F dry bulb		68	Degrees F
	50	%RH			

Heating & Ventilating Inside Conditions

Summer	80	Degrees F dry bulb		55	Degrees F
	6	Air changes per hour			

Provide Ventilation rates and systems per the latest edition of ASHRAE Standard 62, *Ventilation for Acceptable Indoor Air Quality*.

The HVAC system shall provide each zone with the choice of heating or cooling year round unless otherwise indicated. Each zone shall have its own limited range of control, as allowed by the control system central workstation.

Provide protective coatings on casings and coils which come in contact with outside air.

D3020 HEAT GENERATING SYSTEMS

Boilers

Equipment Thermal Insulation
Provide Insulation for hot and chilled water pumps and equipment. Provide vapor barrier for chilled water applications.

D3030 COOLING GENERATING SYSTEMS

Chilled Water Systems

Provide connection to and extension of the existing central chilled water system for service to the building HVAC equipment.

D3040 DISTRIBUTION SYSTEMS

Air Distribution, Heating & Cooling

Provide insulated, galvanized steel ductwork. Provide double wall, pre insulated ductwork in public areas when exposed.

Provide aluminum grilles, registers, and diffusers. Provide filter grilles for return air.

Water Distribution Systems
Provide complete, operable hot and chilled water system to serve the HVAC equipment throughout the facility.

Other Distribution Systems
Provide base mounted circulating pumps with VFD drives to operate in conjunction with new pressure sensors

Chilled Water and Hot Water Distribution Systems
Install Variable Frequency Drives (VFDs) on chilled water and hot water pumps identified in Chapter 4. Replace pumps as necessary if not compatible with VFDs. Replace electric motors on all pumps to be equipped with VFDs.

Variable frequency drives shall be located within 20 feet of the pumps.

Factory-assembled variable frequency drive control systems for variable speed control.

All pump VFD's shall be from the same manufacturer. Each VFD shall include motor starter, motor disconnects and controls as required for a complete system.

Units shall be UL-listed and comply with the National Electric Code.

The pump motor shall be NEMA premium efficient TEFC motor, inverter duty, specifically designed and insulated for variable speed pump duty. Provide ceramic bearings and shaft grounding ring to protect motor bearings from variable frequency drive induced currents.

The motor shall have a minimum 1.15 service factor and the service factor beyond shall not be considered available for the load.

Motor and pump shall be statically and dynamically balanced for variable speed operation between 20 percent and 100 percent of full speed.

D3050 TERMINAL & PACKAGE UNITS

Not Used.

D3060 CONTROLS AND INSTRUMENTATION

HVAC Controls

Provide a partial direct digital control (DDC) system which will communicate with the existing DDC system. The existing DDC system was manufactured by Automated Logic.

DDC Control points shall be added to each piece of equipment and programmed to be operated and monitored via the existing DDC system.

Equipment installed by contractor shall have at minimum the following control points

Air handling units

- Supply air temperature
- Return air temperature
- Outside air temperature (can be a global point)
- All post coil temperatures (air temperature after each coil)
- Fan speed or VFD Hrtz
- Fan status
- Filter Differential Pressure (DP)
- Return air CO2 concentrations
- Outside air CO2 (can be a global point)
- Hydronic valve positions
- Outside Air damper position
- Return Air damper position
- Relief Air damper position

Terminal air units

- Damper position
- Zone temperature set point
- Zone temperature
- Zone CO2
- Fan status (if fan present)
- Supply air temperature
- Hydronic valve position

Hydronic HVAC pumps

- Pump status
- VFD speed
- Pump status
- Pump Delta P (Pressure)

Boiler

- Hot water supply temperature(s)
- Hot water return temperature(s)

- Boiler status
- Hot water flow

Exhaust fans

- Status
- Speed or cfm(if applicable)

The installed BAS system shall have the ability to perform trending and data gathering consistent with the demands of the client. New control points will require the use of existing Automated Logic controllers or the installation of new controllers.

D3070 SYSTEMS TESTING AND BALANCING

Provide complete Testing and Balancing (TAB) of all new or modified air and water distribution systems and HVAC equipment. The contractor is responsible for hiring an independent third-party NEBB certified Test & Balance firm to perform independent inspections, testing, re-balancing and verification of the air and water distribution systems.

Systems to be commissioned include, but are not limited to the following systems: HVAC systems, HVAC control systems, hot water systems, DDC systems, and Testing, Adjusting and Balancing.

D40 FIRE PROTECTION SYSTEMS

D4010 FIRE ALARM AND DETECTION SYSTEMS

Maintain the existing associated interlocks and operation of the fire alarm/mass notification system protocol/sequencing for monitoring and control functions associated with the existing equipment. Ensure compliance with UFC and NFPA criteria.

D50 ELECTRICAL

The electrical design shall comply with the design criteria specified in UFC 3-501-01, *Electrical Engineering*, and its referenced documents.

D5010 ELECTRICAL SERVICE & DISTRIBUTION

Provide an insulated equipment grounding conductor in all raceways for systems operating at greater than 50 volts.

Panelboards shall comply with UL 67 and UL 50.

Provide molded case circuit breakers in accordance with UL 489.

Fusible Disconnect Switches: Heavy Duty, Single Throw: UL 98 and NEMA KS 1, Type HD
Nonfusible Disconnect Switches: Heavy Duty, Single Throw: UL 98, Type HD.

Full-Voltage Magnetic Controllers: Full voltage, non-reversing, electrically held.

Combination Magnetic Controller: Fusible disconnecting means, and with auxiliary contacts.

D5020 LIGHTING & BRANCH WIRING

Not Used.

F20 SELECTIVE BUILDING DEMOLITION

F2020 HAZARDOUS COMPONENT ABATEMENT

Prior to the start of the work the ECATTS trained contractor is required to inspect the work area with the designer of record, and government representative to address existing potentially hazardous components as part of the work. The contractor is required to provide a list of hazardous components, locations and quantities that must be addressed as part of the work.

Private Qualified Person (PQP)

The Contractor is required to hire a PQP to ensure compliance with the approved work plans and perform independent inspections, testing and verification of the hazardous components work including: asbestos, lead containing paint.

G40 SITE ELECTRICAL UTILITIES

G4010 ELECTRICAL DISTRIBUTION

The electrical design shall comply with the design criteria specified in UFC 3-501-01, *Electrical Engineering*.

All primary distribution systems must be designed as four wire, multi-grounded systems that are wye connected at the source transformer. A system grounded neutral conductor must be provided throughout the system. Equipment intended to interrupt current at fault levels must have interrupting ratings sufficient for the nominal circuit voltage and the current that is available at the line terminals of the equipment.

Equipment foundation pads must be 200 mm (8 in) thick; pre-cast concrete pads can be used. Ensure a minimum of 3 m (10 ft) clear workspace in front of pad-mounted equipment for hot stick work. Provide bollards in areas where equipment is subject to vehicular damage.

Part 3 Statement of Work / Project Program – Building 3808

Table of Contents

CHAPTERS

1. PROJECT DESCRIPTION

2. PROJECT OBJECTIVES

3. SITE ANALYSIS

4. BUILDING REQUIREMENTS

5. ROOM REQUIREMENTS (Not Used)

6. ENGINEERING SYSTEMS REQUIREMENTS

B30 Roofing
C10 Interior Construction
C20 Stairs
C30 Interior Finishes
D10 Conveying Systems
D20 Plumbing
D30 HVAC
D40 Fire Protection Systems
D50 Electrical Power and Lighting
E10 Equipment
E20 Furnishings
F10 Special Construction
F20 Selective Building Demo
G10 Site Preparations
G20 Site Improvements
G30 Site Civil/Mechanical Utilities
G40 Site Electrical Utilities

All work described in this section is included as part of the BASE BID Package.

1.0 PROJECT DESCRIPTION

1.1 Overview

A new Industrial Controls System (ICS) infrastructure is currently planned for JNTEXP Little Creek. The ICS will provide a secure network where Direct Digital Control (DDC), Advanced Metering Infrastructure (AMI) and Supervisory Control and Data Acquisition (SCADA) systems will be accessible from a single location by operations staff. (The ICS installation and programming are not part of this contract.)

As part of this projects development, Building 3808 has gone through retro-commissioning for HVAC and DDC systems. This project includes the scope required for the installation of new DDC control points. Additionally, the project includes a number of corrective actions and energy conservation measures (ECMs) which will improve overall facility operations and energy efficiency.

1.2 Project Components

The scope for Building 3808 includes:

- Lighting
  - Improvements
- HVAC
  - Repairs/Improvements
  - Additional Control Points
- Chilled Water System Repairs
- BAS/EMS Logic Repairs

2.0 PROJECT OBJECTIVES

The overall ICS project is designed to provide a secure network where key utility and building performance data will be accessible from a single location; to provide improvements at Building 3808 to feed into this new secure network; and to provide energy savings.

The portion of the project executed under this contract will provide improvements at buildings to allow them to feed into this new secure network, and provide energy savings. These savings are intended, through Navy funding programs, to establish a payback for the entire project.

2.1 Applicable Codes and Standards

In addition to the codes and standards listed in Part 4, the design and construction shall be in accordance with the latest revision/edition of the DoD Unified Facilities Criteria (UFC). The term "Latest Revision/Edition" is defined as the version as of the project award date.

Unified Federal Criteria (UFC)

- UFC 1-200-01, General Building Requirements, with Change 3
- UFC 1-200-02, High Performance Sustainable Buildings
- FC 1-300-09N, Navy and Marine Corps Design Procedures, with Change 2
- UFC 2-000-05N, Facility Planning for Navy and Marine Corps Shore Installations, (formerly known as P-80)
- UFC 3-400-02, Design: Engineering Weather Data
- UFC 3-400-10N, Mechanical Engineering, with Change 1
- UFC 3-410-02N, Heating, Ventilating, Air Conditioning and Dehumidifying Systems, with Change 2
- UFC 3-410-04N, Industrial Ventilation
- UFC 3-420-01, Plumbing Systems, with Change 10
- UFC 3-450-01, Noise and Vibration Control
- UFC 3-501-01, Electrical Engineering
- UFC 3-520-01, Interior Electrical Systems
- UFC 3-530-01, Design: Interior, Exterior Lighting and Controls, with Change 1
- UFC 3-550-01, Exterior Electrical Power Distribution, with Change 1
- UFC 3-560-01, Electrical Safety, O&M, with Change 5
- UFC 3-570-02N, Electrical Engineering Cathodic Protection
- UFC 3-580-01, Telecommunications Building Cabling Systems Planning and Design
- UFC 3-580-10, Navy and Marine Corps Intranet (NMCI) Standard Construction Practices, with Changes 1-3
- UFC 3-600-01, Fire Protection Engineering for Facilities, with Change 3
- UFC 4-010-01, DoD Minimum Antiterrorism Standards for Buildings, with Change 1
- UFC 4-010-02, DoD Minimum Standoff Distances for Buildings

Refer to UFGS 01 33 10.05 20 for additional information regarding applicable UFC documents.

Additional Standards

- NFPA 70

2.2 Sustainable Design

Design and construct project per sustainability requirements identified in Section 01 33 29.05 20, Sustainability Requirements For Design-Build. Additional specific sustainability requirements are found in this document.

2.3 Stormwater Management - Low Impact Development (LID)

Not applicable – project scope does not include any site work.

3.0 SITE ANALYSIS

3.1 Workflow Process

The Contractor shall develop a working schedule in coordination with NAVFAC Mid-Atlantic. The working schedule shall include design of all elements of the project and commissioning. The Contractor shall coordinate his work with on-going base activities.

The Contractor shall be responsible for preparing, submitting and obtaining all permits that may be required by the Commonwealth of Virginia, the local government, SHPO, and other jurisdictional entities for work under this contract.

The Contractor is also responsible for preparing, submitting, and obtaining air pollution control permits, as necessary, with NAVFAC.

The Contractor shall consult with NAVFAC and JNTEXP Little Creek to establish staging and lay-down areas that shall minimize disruption to activities adjacent to the site. Refer to Part 2 of this RFP for details.

4.0 BUILDING REQUIREMENTS

4.1 EXISTING CONDITIONS

Building 3808 is a two story facility that that is used as an administration and training space. The building is approximately 68,600 square feet. The facility is equipped with a 4-pipe air handling system that is connected to air cooled chillers with variable flow. The building is also served by steam to hot water heat exchangers with constant flow. Conditioned air is delivered to the spaces via air handling units and variable air volume boxes. Exhaust and relief air is provided by exhaust fans and relief dampers.

Approximately 100% of the facility equipment has electric/electronic controls. The lighting in the building consists of an array of 2x4, 3 to 4 lamp, T8 fluorescent fixtures, and 1x4-2 lamp T8 fluorescent fixtures. In addition, high bay- 6 lamp, T5 fluorescent fixtures, and recessed compact fluorescent units were also observed.

The building was found to have air handling units with leaking pipes, collapsed filters, and leaking diffusers. In addition, maintenance is being performed to address emergency situations, rather than as a preventive measure. Leaking roofs and broken outdoor showers were also observed at the facility.

4.2 PROJECT SCOPE

Contractor shall conduct the following corrective actions identified in the scope column of each of the system tables.

The contractor shall, for any hydronic system that is mentioned below, install 4 temperature and 4 pressure gauges and ensure proper communication to the BAS.

Upon completion of corrective actions, the contractor shall then re-commission the affected systems identified in the corrective actions. Contractor shall utilize the Functional Performance Tests which will be provided to successful bidder. Testing shall be conducted on systems identified in the above tables and will test system DDC control components involved with temperature settings, air flow volume, air quality, percent outside air volume, humidity, and all other pertinent parameters. Testing shall emphasize the assessment of individual mechanical component performance and response to DDC commands, as well as how the entire system interactively functions in order to pinpoint operational flaws and the best opportunities for optimization.

Once installation of new equipment and functional performance testing is completed, the contractor shall hire an independent third-party NEBB certified Test & Balance firm to conduct testing and balancing on all air and water side systems that have had work performed on them as part of this contract.

**For all activities, where DDC personnel are required, the contractor shall contact the NAVFAC PWD DDC personnel. The DDC personnel shall be notified 10 business days prior to any activities, where DDC assistance is required. The contractor shall not access, make adjustments or make changes to any DDC related components without prior authorization from the DDC POC.

Lighting

Issue	Existing Condition	Scope
001	Several lighting switches are not properly connected, creating a hazard.	Install a new wire pull to light switches (appx 30') and 3-4 new switches).

HVAC

Issue	Tag	Quantity	Existing Condition	Scope
001	AHU-2	1	When fan is at 100% with proven airflow, the discharge pressure sensor reads 0” wc.	Replace the controls connection at the VFD.
002	AHU-2	1	The mixed air temperature sensor is located too closely to the heating coil and gives faulty readings. The return air sensor is picking up unusually high temperature due to close proximity to a heating coil leaking steam. This is preventing proper economizer operation.	Replace the steam valve (3”) and actuator. Relocate the return air sensor 3’ upstream of the coil.
003	AHU-1	1	NAVFAC has locked the outside air damper to 0% open. When lock was released, the OA damper actuator commanded the damper open, but damper did not open.	Replace damper actuator.
004	AHU-2	3 LF	AHU-2 CW pipe is leaking.	Replace 3’ of 3” pipe and insulate.
005			SEAL storage area is not properly ventilated.	Install (8) upright, wall powered circulation fans in SEAL storage area, 2,500 CFM each.
006	AHU	7	AHUs have no economizer control.	Modify AHUs using enthalpy control to allow outside air to be used for cooling when outside air is cool and dry enough to satisfy building indoor conditions.
007	Dry Room		The Dry Room has excess humidity.	Install dehumidifier in the dry room.
008	All		Floor units are used to control unbalanced systems.	When HVAC is correctly balanced, remove floor units.

Chilled Water System

Issue	Tag	Quantity	Existing Condition	Scope
001	AHU-2	3	All 3 CHW temperature gauges give faulty readings.	Replace CHW temperature gauges.
002	AHU-1	1	The chilled water control valve (2”) is correctly tracking but the BAS command only shows 100% open. Item is NOT LOCKED on the BAS. Actuator leaks when traversing.	Replace the valve body (3”) and reuse actuator. Reconfigure BAS connection.

BAS/EMS Logic Repairs

Issue	Tag	Quantity	Existing Condition	Scope
001	AHU-4		OA flow readings on the unit are approximately half of what is displayed on the BAS. This factor is built into the logic. The OA duct static pressure damper is not responding to the setpoint.	Reprogram the BAS for OA CFM.
002	SEAL Storage Area	10	The SEAL storage area has no humidity sensors.	Install humidity sensors in SEAL storage locker area
003	Heat Recovery Wheel		While economizing, the energy wheel is commanded to run. This heats outside air with exhaust air, then cools it back down with the cooling coil.	Include in the program the economizer (based on outside air) logic to override the enthalpy wheel to shut OFF when in economizer cooling.

5.0 ROOM REQUIREMENTS

Not Used.

6.0 ENGINEERING SYSTEMS REQUIREMENTS (ESR)

B30 Roofing – *(Not Used)*
C10 Interior Construction – *(Not Used)*
C20 Stairs – *(Not Used)*
C30 Interior Finishes
D10 Conveying Systems – *(Not Used)*
D20 Plumbing
D30 HVAC
D40 Fire Protection Systems
D50 Electrical Power and Lighting
E10 Equipment – *(Not Used)*
E20 Furnishings – *(Not Used)*
F10 Special Construction – *(Not Used)*
F20 Selective Building Demo – *(Not Used)*
G10 Site Preparations – *(Not Used)*
G20 Site Improvements – *(Not Used)*
G30 Site Civil/Mechanical Utilities – *(Not Used)*
G40 Site Electrical Utilities

C30 INTERIOR FINISHES

C3010 WALL FINISHES

All interior concrete masonry partitions shall be painted.

Unless noted otherwise, all interior gypsum board wall partitions shall be painted gypsum board.

C3020 FLOOR FINISHES

Not Used.

C3030 CEILING FINISHES

Primary ceiling finish shall be 24 inch by 24 inch by 5/8 inch minimum thickness suspended acoustical panel ceiling system, except provide a suspended gypsum board ceiling in entrance lobby, and restrooms.

Ceiling finish material shall be painted gypsum board.

C3040 INTERIOR COATINGS AND SPECIAL FINISHES

Where any new surfaces are required (i.e., due to cutting/patching for HVAC work), paint to match previously painted interior surfaces. Surfaces requiring painting may include walls, doors, trim, ceilings as well as all interior exposed metal items, to include interior grilles, registers, diffusers, access panels, and panel boxes.

D20 PLUMBING

D2010 PLUMBING FIXTURES

Not Used.

D2020 DOMESTIC WATER EQUIPMENT

Insulation & Identification

Provide insulation on domestic water hot and cold supply and recirculation piping.

D2040 RAIN WATER DRAINAGE

Not Used.

D30 HVAC

HVAC System Requirements

Provide air conditioning and heating for spaces as indicated and for the following Design conditions:

Outside Conditions

Summer	91	Degrees F dry bulb	Winter	21	Degrees F
	76	Degrees F wet bulb			

Inside Conditions

Summer	23.8	Degrees C dry bulb	Winter	20	Degrees C
	75	Degrees F dry bulb		68	Degrees F
	50	%RH			

Heating & Ventilating Inside Conditions

Summer	80	Degrees F dry bulb		55	Degrees F
	6	Air changes per hour			

Provide Ventilation rates and systems per the latest edition of ASHRAE Standard 62, *Ventilation for Acceptable Indoor Air Quality*.

The HVAC system shall provide each zone with the choice of heating or cooling year round unless otherwise indicated. Each zone shall have its own limited range of control, as allowed by the control system central workstation.

Provide protective coatings on casings and coils which come in contact with outside air.

D3020 HEAT GENERATING SYSTEMS

Boilers

Equipment Thermal Insulation
Provide Insulation for hot and chilled water pumps and equipment. Provide vapor barrier for chilled water applications.

D3030 COOLING GENERATING SYSTEMS

Chilled Water Systems

Provide connection to and extension of the existing central chilled water system for service to the building HVAC equipment.

Provide heat recovery for reheat.

D3040 DISTRIBUTION SYSTEMS

Air Distribution, Heating & Cooling

Provide insulated, galvanized steel ductwork. Provide double wall, preinsulated ductwork in public areas when exposed.

Provide aluminum grilles, registers, and diffusers. Provide filter grilles for return air.

Air Handling Units
Provide re-programming to allow economizer mode for existing AHUs

D3050 TERMINAL & PACKAGE UNITS

Dehumidification
Provide dehumidification units to serve locker room areas of the facility.

D3060 CONTROLS AND INSTRUMENTATION

HVAC Controls

Provide a partial direct digital control (DDC) system which will communicate with the existing DDC system. The existing DDC system was manufactured by Automated Logic.

DDC Control points shall be added to each piece of equipment indicated in Chapter 4 and programmed to be operated and monitored via the existing DDC system.

New or replacement equipment installed by contractor shall have at minimum the following control points

Air handling units

- Supply air temperature
- Return air temperature
- Outside air temperature (can be a global point)
- All post coil temperatures (air temperature after each coil)
- Fan speed or VFD Hrtz
- Fan status

- Filter Differential Pressure (DP)
- Return air CO2 concentrations
- Outside air CO2 (can be a global point)
- Hydronic valve positions
- Outside Air damper position
- Return Air damper position
- Relief Air damper position

Terminal air units

- Damper position
- Zone temperature set point
- Zone temperature
- Zone CO2
- Fan status (if fan present)
- Supply air temperature
- Hydronic valve position

Hydronic HVAC pumps

- Pump status
- VFD speed
- Pump status
- Pump Delta P (Pressure)

Boiler

- Hot water supply temperature(s)
- Hot water return temperature(s)
- Boiler status
- Hot water flow

Exhaust fans

- Status
- Speed or cfm(if applicable)

The installed BAS system shall have the ability to perform trending and data gathering consistent with the demands of the client. New control points will require the use of existing Automated Logic controllers or the installation of new controllers.

D3070 SYSTEMS TESTING AND BALANCING

Provide complete Testing and Balancing (TAB) of all new or modified air and water distribution systems and HVAC equipment. The contractor is responsible for hiring an independent third-party NEBB certified Test & Balance firm to perform independent inspections, testing, re-balancing and verification of the air and water distribution systems.

Systems to be commissioned include, but are not limited to the following systems: HVAC systems, HVAC control systems, hot water systems, DDC systems, and Testing, Adjusting and Balancing.

D40 FIRE PROTECTION SYSTEMS

D4010 FIRE ALARM AND DETECTION SYSTEMS

Maintain the existing associated interlocks and operation of the fire alarm/mass notification system protocol/sequencing for monitoring and control functions associated with the existing equipment. Ensure compliance with UFC and NFPA criteria.

D50 ELECTRICAL

The electrical design shall comply with the design criteria specified in UFC 3-501-01, *Electrical Engineering*, and its referenced documents.

D5010 ELECTRICAL SERVICE & DISTRIBUTION

Provide an insulated equipment grounding conductor in all raceways for systems operating at greater than 50 volts.

Panelboards shall comply with UL 67 and UL 50.

Provide molded case circuit breakers in accordance with UL 489.

Fusible Disconnect Switches: Heavy Duty, Single Throw: UL 98 and NEMA KS 1, Type HD
Non fusible Disconnect Switches: Heavy Duty, Single Throw: UL 98, Type HD.

Full-Voltage Magnetic Controllers: Full voltage, non-reversing, electrically held.

Combination Magnetic Controller: Fusible disconnecting means, and with auxiliary contacts.

D5020 LIGHTING & BRANCH WIRING

Retrofit existing fluorescent lighting system with LED lighting including switches, automatic controls, occupancy sensors, and automatic lighting shutoff capability.

All conductors shall be copper. All wiring shall be in electrical metal conduits and shall be concealed except in the industrial spaces and at locations indicated in Part 3. No conductors shall be smaller than No. 12 AWG, copper wires. Wiring below slab or underground shall be in Schedule 40 PVC with ground wire. Exposed conduits on the exterior of the building are prohibited. Provide a ground conductor for each circuit; conduits shall not be used for grounding. Use of cable assemblies Types AC, MC, or MI and flat conductors are prohibited. Circuit breakers shall be bolt-on type. Series rated circuit breakers and fusible panelboards shall not be used.

All homerun circuits must contain no more than 3 phase conductors.

Contractor shall install lighting control and monitoring for existing lighting circuits. Lighting control system shall be compatible with existing BAS system by Automated Logic and utilize compatible controllers. Lighting control shall be installed and programmed to measure power usage, operate on/off based on timeclock setbacks and have integrated occupancy sensors for occupant overrides.

Provide dedicated power connections to all ancillary office equipment such as printers, faxes, plotters, and shredders.

F20 SELECTIVE BUILDING DEMOLITION

F2020 HAZARDOUS COMPONENT ABATEMENT

Prior to the start of the work the ECATTS trained contractor is required to inspect the work area with the designer of record, and government representative to address existing potentially hazardous components as part of the work. The contractor is required to provide a list of hazardous components, locations and quantities that must be addressed as part of the work.

Private Qualified Person (PQP)

The Contractor is required to hire a PQP to ensure compliance with the approved work plans and perform independent inspections, testing and verification of the hazardous components work including: asbestos and lead containing paint.

G40 SITE ELECTRICAL UTILITIES

G4010 ELECTRICAL DISTRIBUTION

The electrical design shall comply with the design criteria specified in UFC 3-501-01, *Electrical Engineering*.

All primary distribution systems must be designed as four wire, multi-grounded systems that are wye connected at the source transformer. A system grounded neutral conductor must be provided throughout the system. Equipment intended to interrupt current at fault levels must have interrupting ratings sufficient for the nominal circuit voltage and the current that is available at the line terminals of the equipment.

Equipment foundation pads must be 200 mm (8 in) thick; pre-cast concrete pads can be used. Ensure a minimum of 3 m (10 ft) clear workspace in front of pad-mounted equipment for hot stick work. Provide bollards in areas where equipment is subject to vehicular damage.

Part 3 Statement of Work / Project Program – Building 3889

Table of Contents

CHAPTERS

1. PROJECT DESCRIPTION

2. PROJECT OBJECTIVES

3. SITE ANALYSIS

4. BUILDING REQUIREMENTS

5. ROOM REQUIREMENTS (Not Used)

6. ENGINEERING SYSTEMS REQUIREMENTS

B30 Roofing
C10 Interior Construction
C20 Stairs
C30 Interior Finishes
D10 Conveying Systems
D20 Plumbing
D30 HVAC
D40 Fire Protection Systems
D50 Electrical Power and Lighting
E10 Equipment
E20 Furnishings
F10 Special Construction
F20 Selective Building Demo
G10 Site Preparations
G20 Site Improvements
G30 Site Civil/Mechanical Utilities
G40 Site Electrical Utilities

All work described in this section is included as part of the BASE BID Package.

1.0 PROJECT DESCRIPTION

1.1 Overview

A new Industrial Controls System (ICS) infrastructure is currently planned for JNTEXP Little Creek. The ICS will provide a secure network where Direct Digital Control (DDC), Advanced Metering Infrastructure (AMI) and Supervisory Control and Data Acquisition (SCADA) systems will be accessible from a single location by operations staff. (The ICS installation and programming are not part of this contract.)

As part of this projects development, Building 3889 has gone through retro-commissioning for HVAC and DDC systems. This project includes the scope required for the installation of new DDC control points. Additionally, the project includes a number of corrective actions and energy conservation measures (ECMs) which will improve overall facility operations and energy efficiency.

1.2 Project Components

The scope for Building 3889 includes:

- HVAC
  - Repairs/Improvements
  - Additional Control Points
- Hot Water System Repairs
- Chilled Water System Repairs
- Chiller Repairs
- Boiler Repairs
- BAS/EMS Logic Repairs

2.0 PROJECT OBJECTIVES

The overall ICS project is designed to provide a secure network where key utility and building performance data will be accessible from a single location; to provide improvements at Building 3889 to feed into this new secure network; and to provide energy savings.

The portion of the project executed under this contract will provide improvements at buildings to allow them to feed into this new secure network, and provide energy savings. These savings are intended, through Navy funding programs, to establish a payback for the entire project.

2.1 Applicable Codes and Standards

In addition to the codes and standards listed in Part 4, the design and construction shall be in accordance with the latest revision/edition of the DoD Unified Facilities Criteria (UFC). The term "Latest Revision/Edition" is defined as the version as of the project award date.

Unified Federal Criteria (UFC)

- UFC 1-200-01, General Building Requirements, with Change 3
- UFC 1-200-02, High Performance Sustainable Buildings
- FC 1-300-09N, Navy and Marine Corps Design Procedures, with Change 2
- UFC 2-000-05N, Facility Planning for Navy and Marine Corps Shore Installations, (formerly known as P-80)
- UFC 3-400-02, Design: Engineering Weather Data
- UFC 3-400-10N, Mechanical Engineering, with Change 1
- UFC 3-410-02N, Heating, Ventilating, Air Conditioning and Dehumidifying Systems, with Change 2
- UFC 3-410-04N, Industrial Ventilation
- UFC 3-420-01, Plumbing Systems, with Change 10
- UFC 3-450-01, Noise and Vibration Control
- UFC 3-501-01, Electrical Engineering
- UFC 3-520-01, Interior Electrical Systems
- UFC 3-530-01, Design: Interior, Exterior Lighting and Controls, with Change 1
- UFC 3-550-01, Exterior Electrical Power Distribution, with Change 1
- UFC 3-560-01, Electrical Safety, O&M, with Change 5
- UFC 3-570-02N, Electrical Engineering Cathodic Protection
- UFC 3-580-01, Telecommunications Building Cabling Systems Planning and Design
- UFC 3-580-10, Navy and Marine Corps Intranet (NMCI) Standard Construction Practices, with Changes 1-3
- UFC 3-600-01, Fire Protection Engineering for Facilities, with Change 3
- UFC 4-010-01, DoD Minimum Antiterrorism Standards for Buildings, with Change 1
- UFC 4-010-02, DoD Minimum Standoff Distances for Buildings

Refer to UFGS 01 33 10.05 20 for additional information regarding applicable UFC documents.

Additional Standards

- NFPA 70

2.2 Sustainable Design

Design and construct project per sustainability requirements identified in Section 01 33 29.05 20, Sustainability Requirements For Design-Build. Additional specific sustainability requirements are found in this document.

2.3 Stormwater Management - Low Impact Development (LID)

Not applicable – project scope does not include any site work.

3.0 SITE ANALYSIS

3.1 Workflow Process

The Contractor shall develop a working schedule in coordination with NAVFAC Mid-Atlantic. The working schedule shall include design of all elements of the project and commissioning. The Contractor shall coordinate his work with on-going base activities.

The Contractor shall be responsible for preparing, submitting and obtaining all permits that may be required by the Commonwealth of Virginia, the local government, SHPO, and other jurisdictional entities for work under this contract.

The Contractor is also responsible for preparing, submitting, and obtaining air pollution control permits, as necessary, with NAVFAC.

The Contractor shall consult with NAVFAC and JNTEXP Little Creek to establish staging and lay-down areas that shall minimize disruption to activities adjacent to the site. Refer to Part 2 of this RFP for details.

3.2 Special Design Challenges

Among the special design challenges inherent in this project are the following:

- An escort is required to access mechanical equipment in Building 3889.

4.0 BUILDING REQUIREMENTS

4.1 EXISTING CONDITIONS

Building 3889 was built in 2009, and is approximately 98,400 square feet. The building serves as a spec war amphibious operations facility, with associated administrative offices. The mechanical cooling for the facility is primarily handled by an air cooled chiller. Heating is provided by a natural gas boiler. The facility HVAC system also includes roof top units, heating and ventilation units, variable refrigerant flow system, and split units.

The facility is controlled by an Automated Logic DDC. Lighting in the building consists of 2x4-3 lamp diffuser, and parabolic 1x4-2 lamp T8 florescent fixtures. The facility is also illuminated by 2x2 u-tube florescent fixtures, and recessed CFL florescent fixtures. Motion sensor controls were installed in some rooms.

It was found that maintenance is being performed to address emergency situations, rather than as a preventive measure. In addition, the BAS system requires updating, and the variable refrigerant flow unit is not operating properly and is consistently failing.

4.2 PROJECT SCOPE

Contractor shall conduct the following corrective actions identified in the scope column of each of the system tables.

The contractor shall, for any hydronic system that is mentioned below, install 4 temperature and 4 pressure gauges and ensure proper communication to the BAS.

Upon completion of corrective actions, the contractor shall then re-commission the affected systems identified in the corrective actions. Contractor shall utilize the Functional Performance Tests which will be provided to successful bidder. Testing shall be conducted on systems identified in the above tables and will test system DDC control components involved with temperature settings, air flow volume, air quality, percent outside air volume, humidity, and all other pertinent parameters. Testing shall emphasize the assessment of individual mechanical component performance and response to DDC commands, as well as how the entire system interactively functions in order to pinpoint operational flaws and the best opportunities for optimization.

Once installation of new equipment and functional performance testing is completed, the contractor shall hire an independent third-party NEBB certified Test & Balance firm to conduct testing and balancing on all air and water side systems that have had work performed on them as part of this contract.

**For all activities, where DDC personnel are required, the contractor shall contact the NAVFAC PWD DDC personnel. The DDC personnel shall be notified 10 business days prior to any activities, where DDC assistance is required. The contractor shall not access, make adjustments or make changes to any DDC related components without prior authorization from the DDC POC.

HVAC

Issue	Tag	Quantity	Existing Condition	Scope
001	AHU-1	1	AHU-1 has a failed return (relief) fan, likely due to a faulty 5HP motor.	Replace motor.
002	AHU-1	3	With outside air damper 100% open, return air damper 100% closed, outside air temperature at 38F, mixed air temp is 66F. Modulating the dampers did not produce a response.	Replace actuators. Implement damper feedback based on end switches.
003	AHU-1	1	Supply fan airflow reads 8,851 CFM, outside air reads 2,821 CFM with the return air damper 100% closed and outside air damper 100% open. Airflow sensors appear to be either incorrectly located or not properly calibrated.	Relocate sensors and calibrate as required.
004	AHU-1	1	AHU-1 is not on an occupancy schedule.	Determine if unit can be scheduled. If possible, schedule unit.
005	RTU-2	1	Supply fan sheeves/pulleys are worn and belts are loose. The unit does not meet static pressure requirements.	Replace belts and sheeves/pulleys. Adjust alignment.
006	RTU-2	3	The dampers for RTU-2 do not respond to control signal overrides, perhaps due to faulty actuators.	Replace actuators.
007	RTU-2	1	The dirty filter alarm is on when the unit has clean filters.	Clear alarm.
008	HVU-1 & 2	2	HVU-1 was found with power disconnected (wires cut on downstream side of contactors). Unit filters were in bad condition.	Reestablish power to unit and replace filters.
009	RTU-1	1	Supply fan has loose belts.	Adjust and align belts and fan.
010	AHU	1	AHU has no VFD control. Existing motor is 7.5 HP.	Furnish and install 1 VFD controller. Install a static pressure sensor at about ¾ down the main supply air duct run. to provide control over the variable frequency drive. New VFDs shall be connected to the existing AHU power distribution system and existing fans. Provide BAS points to control/monitor the systems' operation including at a minimum the

				following functions: start/stop status, static pressure, speed, alarm. Place the VFDs within 20 feet of existing equipment.

Hot Water System

Issue	Tag	Quantity	Existing Condition	Scope
001	P-4	1	The pump has a new coupling, but is not properly aligned, which is destroying the new coupling.	Align pump.

Chilled Water System

Issue	Tag	Quantity	Existing Condition	Scope
001	P-1	1	The 7.5HP pump is out.	Replace pump.

Chiller Repairs

Issue	Tag	Quantity	Existing Condition	Scope
001	CH-1	1	Chiller compressor 2A has only 3 starts and 0 run hours.	Replace compressor.

Boiler Repairs

Issue	Tag	Quantity	Existing Condition	Scope
001	B-1	1	The pressure gauge on the HWR to boiler is approximately 6 degrees different than the HWR temperature reading on the ALS.	Verify the calibration of gauges and temperature sensors.

BAS/EMS Logic Repairs

Issue	Tag	Quantity	Existing Condition	Scope
001	AHU-1	1	The graphic HOA switch does not turn unit off.	Correct program logic.
002	RTU-2	1	The outside air damper position is not accurately reflected on the ALS. When the damper is open, the graphic shows the damper as closed.	Correct graphics to accurately display damper position.
003	RTU-2	1	The exhaust fan for RTU-2 does not work, perhaps due to	Correct program logic.

			a bad signal from the control system.	
004	CH-1	1	The chiller is set up with local chilled water set point control.	Incorporate chilled water set point control in the ALS, not locally.
005	P-3 & 4	1	When testing the hot water system pumps, P-3 was failed at the VFD and P-4 (lag pump) came on after a 3 minute delay, the P-3 was indexed to a lag pump. When P-4 was failed at the VFD, neither pump came back on and both pumps were indexed as lag pumps.	Correct pump indexing to change regardless of scheduled change over. Currently both pumps will remain off until the switch over timer changes the pump index to lead pump.
006	RTU-1	1	The exhaust air damper does not close when the exhaust fan is de-energized.	Correct program logic.
007	RTU-1	1	When RTU-1 is switched over to cooling mode from heating mode, the heating control valve takes a long time to close.	Correct PID loop/control logic to close the heating control valve more quickly to avoid simultaneous heating and cooling.
008	CHLR	2	Cannot adjust chiller demand limit on the BAS.	Provide control points to enable chiller demand limit adjustment on the BAS.
009	EF	20	Exhaust fans are not on the BAS.	Provide control points to control/monitor exhaust fans.
010	HVU-1 & 2	2	The BAS does not have discharge air temperature sensors.	Provide DAT sensors.

5.0 ROOM REQUIREMENTS

Not Used.

6.0 ENGINEERING SYSTEMS REQUIREMENTS (ESR)

B30 Roofing – *(Not Used)*
C10 Interior Construction – *(Not Used)*
C20 Stairs – *(Not Used)*
C30 Interior Finishes
D10 Conveying Systems – *(Not Used)*
D20 Plumbing
D30 HVAC
D40 Fire Protection Systems
D50 Electrical Power and Lighting
E10 Equipment – *(Not Used)*
E20 Furnishings – *(Not Used)*
F10 Special Construction – *(Not Used)*
F20 Selective Building Demo – *(Not Used)*
G10 Site Preparations – *(Not Used)*
G20 Site Improvements – *(Not Used)*
G30 Site Civil/Mechanical Utilities – *(Not Used)*
G40 Site Electrical Utilities

C30 INTERIOR FINISHES

C3010 WALL FINISHES

All interior concrete masonry partitions shall be painted.

Unless noted otherwise, all interior gypsum board wall partitions shall be painted gypsum board.

C3020 FLOOR FINISHES

Not Used.

C3030 CEILING FINISHES

Primary ceiling finish shall be 24 inch by 24 inch by 5/8 inch minimum thickness suspended acoustical panel ceiling system, except provide a suspended gypsum board ceiling in entrance lobby, and restrooms.

Ceiling finish material shall be painted gypsum board.

C3040 INTERIOR COATINGS AND SPECIAL FINISHES

Where any new surfaces are required (i.e., due to cutting/patching for HVAC work), paint to match previously painted interior surfaces. Surfaces requiring painting may include walls, doors, trim, ceilings as well as all interior exposed metal items, to include interior grilles, registers, diffusers, access panels, and panel boxes.

D30 HVAC

HVAC System Requirements

Provide air conditioning and heating for spaces as indicated and for the following Design conditions:

Outside Conditions

Summer	91	Degrees F dry bulb	Winter	21	Degrees F
	76	Degrees F wet bulb			

Inside Conditions

Summer	23.8	Degrees C dry bulb	Winter	20	Degrees C
	75	Degrees F dry bulb		68	Degrees F
	50	%RH			

Heating & Ventilating Inside Conditions

Summer	80	Degrees F dry bulb		55	Degrees F
	6	Air changes per hour			

Provide Ventilation rates and systems per the latest edition of ASHRAE Standard 62, *Ventilation for Acceptable Indoor Air Quality*.

The HVAC system shall provide each zone with the choice of heating or cooling year round unless otherwise indicated. Each zone shall have its own limited range of control, as allowed by the control system central workstation.

Provide protective coatings on casings and coils which come in contact with outside air.

D3020 HEAT GENERATING SYSTEMS

Boilers

Equipment Thermal Insulation
Provide Insulation for hot and chilled water pumps and equipment. Provide vapor barrier for chilled water applications.

D3030 COOLING GENERATING SYSTEMS

Not Used.

D3040 DISTRIBUTION SYSTEMS

Other Distribution Systems

Provide base mounted circulating pumps with VFD drives to operate in conjunction with new pressure sensors

Chilled Water and Hot Water Distribution Systems
Install Variable Frequency Drives (VFDs) on chilled water and hot water pumps identified in Chapter 4. Replace pumps as necessary if not compatible with VFDs. Replace electric motors on all pumps to be equipped with VFDs.

Variable frequency drives shall be located within 20 feet of the pumps.

Factory-assembled variable frequency drive control systems for variable speed control.

All pump VFD's shall be from the same manufacturer. Each VFD shall include motor starter, motor disconnects and controls as required for a complete system.

Units shall be UL-listed and comply with the National Electric Code.

The pump motor shall be NEMA premium efficient TEFC motor, inverter duty, specifically designed and insulated for variable speed pump duty. Provide ceramic bearings and shaft grounding ring to protect motor bearings from variable frequency drive induced currents.

The motor shall have a minimum 1.15 service factor and the service factor beyond shall not be considered available for the load.

Motor and pump shall be statically and dynamically balanced for variable speed operation between 20 percent and 100 percent of full speed.

D3050 TERMINAL & PACKAGE UNITS

Not Used.

D3060 CONTROLS AND INSTRUMENTATION

HVAC Controls

Provide a partial direct digital control (DDC) system which will communicate with the existing DDC system. The existing DDC system was manufactured by Automated Logic.

DDC Control points shall be added to each piece of equipment identified in Chapter 4 and programmed to be operated and monitored via the existing DDC system.

New or replacement equipment installed by contractor shall have at minimum the following control points

Air handling units

- Supply air temperature
- Return air temperature
- Outside air temperature (can be a global point)
- All post coil temperatures (air temperature after each coil)
- Fan speed or VFD Hrtz
- Fan status
- Filter Differential Pressure (DP)
- Return air CO2 concentrations
- Outside air CO2 (can be a global point)
- Hydronic valve positions
- Outside Air damper position
- Return Air damper position
- Relief Air damper position

Terminal air units

- Damper position
- Zone temperature set point
- Zone temperature
- Zone CO2
- Fan status (if fan present)
- Supply air temperature
- Hydronic valve position

Hydronic HVAC pumps

- Pump status
- VFD speed
- Pump status
- Pump Delta P (Pressure)

Boiler

- Hot water supply temperature(s)
- Hot water return temperature(s)
- Boiler status
- Hot water flow

Exhaust fans

- Status
- Speed or cfm(if applicable)

The installed BAS system shall have the ability to perform trending and data gathering consistent with the demands of the client. New control points will require the use of existing Automated Logic controllers or the installation of new controllers.

D3070 SYSTEMS TESTING AND BALANCING

Provide complete Testing and Balancing (TAB) of all new or modified air and water distribution systems and HVAC equipment. The contractor is responsible for hiring an independent third-party NEBB certified Test & Balance firm to perform independent inspections, testing, re-balancing and verification of the air and water distribution systems.

Systems to be commissioned include, but are not limited to the following systems: HVAC systems, HVAC control systems, hot water systems, DDC systems, and Testing, Adjusting and Balancing.

D40 FIRE PROTECTION SYSTEMS

D4010 FIRE ALARM AND DETECTION SYSTEMS

Maintain the existing associated interlocks and operation of the fire alarm/mass notification system protocol/sequencing for monitoring and control functions associated with the existing equipment. Ensure compliance with UFC and NFPA criteria.

D50 ELECTRICAL

The electrical design shall comply with the design criteria specified in UFC 3-501-01, *Electrical Engineering*, and its referenced documents.

D5010 ELECTRICAL SERVICE & DISTRIBUTION

Provide an insulated equipment grounding conductor in all raceways for systems operating at greater than 50 volts.

Panelboards shall comply with UL 67 and UL 50.

Provide molded case circuit breakers in accordance with UL 489.

Fusible Disconnect Switches: Heavy Duty, Single Throw: UL 98 and NEMA KS 1, Type HD
Non fusible Disconnect Switches: Heavy Duty, Single Throw: UL 98, Type HD.

Full-Voltage Magnetic Controllers: Full voltage, non-reversing, electrically held.

Combination Magnetic Controller: Fusible disconnecting means, and with auxiliary contacts.

D5020 LIGHTING & BRANCH WIRING

Not Used.

F20 SELECTIVE BUILDING DEMOLITION

F2020 HAZARDOUS COMPONENT ABATEMENT

Prior to the start of the work the ECATTS trained contractor is required to inspect the work area with the designer of record, and government representative to address existing potentially hazardous components as part of the work. The contractor is required to provide a list of hazardous components, locations and quantities that must be addressed as part of the work.

Private Qualified Person (PQP)

The Contractor is required to hire a PQP to ensure compliance with the approved work plans and perform independent inspections, testing and verification of the hazardous components work including: asbestos and lead containing paint.

G40 SITE ELECTRICAL UTILITIES

G4010 ELECTRICAL DISTRIBUTION

The electrical design shall comply with the design criteria specified in UFC 3-501-01, *Electrical Engineering*.

All primary distribution systems must be designed as four wire, multi-grounded systems that are wye connected at the source transformer. A system grounded neutral conductor must be provided throughout the system. Equipment intended to interrupt current at fault levels must have interrupting ratings sufficient for the nominal circuit voltage and the current that is available at the line terminals of the equipment.

Equipment foundation pads must be 200 mm (8 in) thick; pre-cast concrete pads can be used. Ensure a minimum of 3 m (10 ft) clear workspace in front of pad-mounted equipment for hot stick work. Provide bollards in areas where equipment is subject to vehicular damage.

Part 3 Statement of Work / Project Program – Building T111

Table of Contents

CHAPTERS

1. PROJECT DESCRIPTION

2. PROJECT OBJECTIVES

3. SITE ANALYSIS

4. BUILDING REQUIREMENTS

5. ROOM REQUIREMENTS (Not Used)

6. ENGINEERING SYSTEMS REQUIREMENTS

B30 Roofing
C10 Interior Construction
C20 Stairs
C30 Interior Finishes
D10 Conveying Systems
D20 Plumbing
D30 HVAC
D40 Fire Protection Systems
D50 Electrical Power and Lighting
E10 Equipment
E20 Furnishings
F10 Special Construction
F20 Selective Building Demo
G10 Site Preparations
G20 Site Improvements
G30 Site Civil/Mechanical Utilities
G40 Site Electrical Utilities

All work described in this section is included as part of the BASE BID Package.

1.0 PROJECT DESCRIPTION

1.1 Overview

A new Industrial Controls System (ICS) infrastructure is currently planned for JNTEXP Little Creek. The ICS will provide a secure network where Direct Digital Control (DDC), Advanced Metering Infrastructure (AMI) and Supervisory Control and Data Acquisition (SCADA) systems will be accessible from a single location by operations staff. (The ICS installation and programming are not part of this contract.)

As part of this projects development, Building T111 has gone through retro-commissioning for HVAC and DDC systems. This project includes the scope required for the installation of new DDC control points. Additionally, the project includes a number of corrective actions and energy conservation measures (ECMs) which will improve overall facility operations and energy efficiency.

1.2 Project Components

The scope for Building T111 includes:

- HVAC
  - Repairs/Improvements
  - Additional Control Points
- Insulation/Piping Repairs
- BAS/EMS Logic Repairs

2.0 PROJECT OBJECTIVES

The overall ICS project is designed to provide a secure network where key utility and building performance data will be accessible from a single location; to provide improvements at Building T111 to feed into this new secure network; and to provide energy savings.

The portion of the project executed under this contract will provide improvements at buildings to allow them to feed into this new secure network, and provide energy savings. These savings are intended, through Navy funding programs, to establish a payback for the entire project.

2.1 Applicable Codes and Standards

In addition to the codes and standards listed in Part 4, the design and construction shall be in accordance with the latest revision/edition of the DoD Unified Facilities Criteria (UFC). The term "Latest Revision/Edition" is defined as the version as of the project award date.

Unified Federal Criteria (UFC)

- UFC 1-200-01, General Building Requirements, with Change 3
- UFC 1-200-02, High Performance Sustainable Buildings
- FC 1-300-09N, Navy and Marine Corps Design Procedures, with Change 2
- UFC 2-000-05N, Facility Planning for Navy and Marine Corps Shore Installations, (formerly known as P-80)
- UFC 3-400-02, Design: Engineering Weather Data
- UFC 3-400-10N, Mechanical Engineering, with Change 1
- UFC 3-410-02N, Heating, Ventilating, Air Conditioning and Dehumidifying Systems, with Change 2
- UFC 3-410-04N, Industrial Ventilation
- UFC 3-420-01, Plumbing Systems, with Change 10
- UFC 3-450-01, Noise and Vibration Control
- UFC 3-501-01, Electrical Engineering
- UFC 3-520-01, Interior Electrical Systems
- UFC 3-530-01, Design: Interior, Exterior Lighting and Controls, with Change 1
- UFC 3-550-01, Exterior Electrical Power Distribution, with Change 1
- UFC 3-560-01, Electrical Safety, O&M, with Change 5
- UFC 3-570-02N, Electrical Engineering Cathodic Protection
- UFC 3-580-01, Telecommunications Building Cabling Systems Planning and Design
- UFC 3-580-10, Navy and Marine Corps Intranet (NMCI) Standard Construction Practices, with Changes 1-3
- UFC 3-600-01, Fire Protection Engineering for Facilities, with Change 3
- UFC 4-010-01, DoD Minimum Antiterrorism Standards for Buildings, with Change 1
- UFC 4-010-02, DoD Minimum Standoff Distances for Buildings

Refer to UFGS 01 33 10.05 20 for additional information regarding applicable UFC documents.

Additional Standards

- NFPA 70

2.2 Sustainable Design

Design and construct project per sustainability requirements identified in Section 01 33 29.05 20, Sustainability Requirements For Design-Build. Additional specific sustainability requirements are found in this document.

2.3 Stormwater Management - Low Impact Development (LID)

Not applicable – project scope does not include any site work.

3.0 SITE ANALYSIS

3.1 Workflow Process

The Contractor shall develop a working schedule in coordination with NAVFAC Mid-Atlantic. The working schedule shall include design of all elements of the project and commissioning. The Contractor shall coordinate his work with on-going base activities.

The Contractor shall be responsible for preparing, submitting and obtaining all permits that may be required by the Commonwealth of Virginia, the local government, SHPO, and other jurisdictional entities for work under this contract.

The Contractor is also responsible for preparing, submitting, and obtaining air pollution control permits, as necessary, with NAVFAC.

The Contractor shall consult with NAVFAC and JNTEXP Little Creek to establish staging and lay-down areas that shall minimize disruption to activities adjacent to the site. Refer to Part 2 of this RFP for details.

4.0 BUILDING REQUIREMENTS

4.1 EXISTING CONDITIONS

Building T111 is a three story facility that is used as a training facility. The building is approximately 21,000 square feet. Building T111 was originally constructed to serve as a dormitory, but has been converted to house numerous training and office groups. The facility is equipped with a 2-pipe system that is connected to air cooled chillers. The building is also served by variable flow and steam to hot water heat exchangers with constant flow. Conditioned air is delivered to the spaces via air handling units, fan coils, and variable air volume boxes. Exhaust and relief air is provided by exhaust fans and relief dampers.

Approximately 50% of the facility equipment has pneumatic controls, while the other 50% is operated by electric/electronic controls. The lighting in the building consists of of 2x4, 4 lamp, diffuser T8 fluorescent fixtures. The building was observed to also be lit by 2x2-2 u-tube lamp fluorescent fixtures. Several 6" round recessed fluorescent fixtures were also located on the property. Bathrooms and stairwells were primarily lit by 1 x 4-2 lamp T8 fluorescent wall mount fixtures. Lighting levels seemed appropriate for most areas, while a few were slightly over lit. There is no motion detector or daylighting control serving the building. Exit fixtures are well positioned and in proper working order.

Maintenance is being performed to address emergency situations, rather than as a preventive measure. The facility was observed to have a poor temperature and humidity control, along with inefficient chilled/hot water flow rates. Lead paint was also noticed to be present throughout the building.

4.2 PROJECT SCOPE

Contractor shall conduct the following corrective actions identified in the scope column of each of the system tables.

The contractor shall, for any hydronic system that is mentioned below, install 4 temperature and 4 pressure gauges and ensure proper communication to the BAS.

Upon completion of corrective actions, the contractor shall then re-commission the affected systems identified in the corrective actions. Contractor shall utilize the Functional Performance Tests which will be provided to successful bidder. Testing shall be conducted on systems identified in the above tables and will test system DDC control components involved with temperature settings, air flow volume, air quality, percent outside air volume, humidity, and all other pertinent parameters. Testing shall emphasize the assessment of individual mechanical component performance and response to DDC commands, as well as how the entire system interactively functions in order to pinpoint operational flaws and the best opportunities for optimization.

Once installation of new equipment and functional performance testing is completed, the contractor shall hire an independent third-party NEBB certified Test & Balance firm to conduct testing and balancing on all air and water side systems that have had work performed on them as part of this contract.

**For all activities, where DDC personnel are required, the contractor shall contact the NAVFAC PWD DDC personnel. The DDC personnel shall be notified 10 business days prior to any activities, where DDC assistance is required. The contractor shall not access, make adjustments or make changes to any DDC related components without prior authorization from the DDC POC.

HVAC

Issue	Tag	Quantity	Existing Condition	Scope
001	DOAU-1	1	The HRU is in line with single supply of OA and is not recovering heat from the space. In the winter, it is neutral at best. During the summer, the HRU is reducing efficiency by reheating air that was cooled.	Bypass HRU in the summer.
002	Simulation Room AHU	1	1000 CFM Heat/Cool, 100% recirc unit located in the simulation room is not functioning properly.	Repair simulation room AHU.
003	IT Rooms	2	There is no independent cooling for 2 IT rooms.	Install a 3-ton split system for each IT room.

Insulation/Piping Repairs

Issue	Tag	Quantity	Existing Condition	Scope
001	Mechanical Room	20 LF	Insulation for 2” pipe in the mechanical room is damaged.	Replace insulation.

BAS/EMS Logic Repairs

Issue	Tag	Quantity	Existing Condition	Scope
001	DOAU-1	1	The OA damper stayed open during freeze stat. The BAS commanded the damper to close and recognized that damper is still open.	Check BAS logic. If problem continues, replace actuator.
002	DOAU-1	1	CO2 is not being monitored on the BAS.	Add a control point and BAS logic.
003	AHU-107	1	Via control logic module “coaten” cooling is not allowed unless outside air is warmer than 65F.	Modify programming to enable cooling at a lower temperature for better space temperature and humidity control.

5.0 ROOM REQUIREMENTS

Not Used.

6.0 ENGINEERING SYSTEMS REQUIREMENTS (ESR)

B30 Roofing – *(Not Used)*
C10 Interior Construction – *(Not Used)*
C20 Stairs – *(Not Used)*
C30 Interior Finishes
D10 Conveying Systems – *(Not Used)*
D20 Plumbing
D30 HVAC
D40 Fire Protection Systems
D50 Electrical Power and Lighting
E10 Equipment – *(Not Used)*
E20 Furnishings – *(Not Used)*
F10 Special Construction – *(Not Used)*
F20 Selective Building Demo – *(Not Used)*
G10 Site Preparations – *(Not Used)*
G20 Site Improvements – *(Not Used)*
G30 Site Civil/Mechanical Utilities – *(Not Used)*
G40 Site Electrical Utilities

C30 INTERIOR FINISHES

C3010 WALL FINISHES

All interior concrete masonry partitions shall be painted.

Unless noted otherwise, all interior gypsum board wall partitions shall be painted gypsum board.

C3020 FLOOR FINISHES

Not Used.

C3030 CEILING FINISHES

Primary ceiling finish shall be 24 inch by 24 inch by 5/8 inch minimum thickness suspended acoustical panel ceiling system, except provide a suspended gypsum board ceiling in entrance lobby, and restrooms.

Ceiling finish material shall be painted gypsum board.

C3040 INTERIOR COATINGS AND SPECIAL FINISHES

Where any new surfaces are required (i.e., due to cutting/patching for HVAC work), paint to match previously painted interior surfaces. Surfaces requiring painting may include walls, doors, trim, ceilings as well as all interior exposed metal items, to include interior grilles, registers, diffusers, access panels, and panel boxes.

D30 HVAC

HVAC System Requirements

Provide air conditioning and heating for spaces as indicated and for the following Design conditions:

Outside Conditions

Summer	91	Degrees F dry bulb	Winter	21	Degrees F
	76	Degrees F wet bulb			

Inside Conditions

Summer	23.8	Degrees C dry bulb	Winter	20	Degrees C
	75	Degrees F dry bulb		68	Degrees F
	50	%RH			

Heating & Ventilating Inside Conditions

Summer	80	Degrees F dry bulb		55	Degrees F
	6	Air changes per hour			

Provide Ventilation rates and systems per the latest edition of ASHRAE Standard 62, *Ventilation for Acceptable Indoor Air Quality*.

The HVAC system shall provide each zone with the choice of heating or cooling year round unless otherwise indicated. Each zone shall have its own limited range of control, as allowed by the control system central workstation.

Provide protective coatings on casings and coils which come in contact with outside air.

D3020 HEAT GENERATING SYSTEMS

Equipment Thermal Insulation
Provide Insulation for hot and chilled water pumps and equipment. Provide vapor barrier for chilled water applications.

D3030 COOLING GENERATING SYSTEMS

Chilled Water Systems

Provide connection to and extension of the existing central chilled water system for service to the building HVAC equipment.

Provide heat recovery for reheat.

Direct Expansion Systems
Provide air-cooled, split system with ducted air distribution. Provide coil coatings. Provide with supplemental electric heater

D3040 DISTRIBUTION SYSTEMS

Air Distribution, Heating & Cooling

Provide insulated, galvanized steel ductwork. Provide double wall, preinsulated ductwork in public areas when exposed.

Provide aluminum grilles, registers, and diffusers. Provide filter grilles for return air.

Water Distribution Systems
Provide complete, operable hot and chilled water system to serve the HVAC equipment throughout the facility.

Air Handling Units
Provide constant volume air handler. Provide with 50% filters.

D3050 TERMINAL & PACKAGE UNITS

Fan Coil Units

Provide horizontal or vertical type fan coils and controls to match existing.]

Package units
Provide split-system, air-to-air heat pumps to serve IT rooms.

D3060 CONTROLS AND INSTRUMENTATION

HVAC Controls

Provide a partial direct digital control (DDC) system which will communicate with the existing DDC system. The existing DDC system was manufactured by Automated Logic.

DDC Control points shall be added to each piece of equipment as indicated in Chapter 4 and programmed to be operated and monitored via the existing DDC system.

New or replacement equipment installed by contractor shall have at minimum the following control points

Air handling units

- Supply air temperature
- Return air temperature
- Outside air temperature (can be a global point)
- All post coil temperatures (air temperature after each coil)
- Fan speed or VFD Hrtz
- Fan status
- Filter Differential Pressure (DP)
- Return air CO2 concentrations
- Outside air CO2 (can be a global point)
- Hydronic valve positions
- Outside Air damper position
- Return Air damper position
- Relief Air damper position

Terminal air units

- Damper position
- Zone temperature set point
- Zone temperature
- Zone CO2
- Fan status (if fan present)
- Supply air temperature
- Hydronic valve position

Hydronic HVAC pumps

- Pump status
- VFD speed
- Pump status
- Pump Delta P (Pressure)

Boiler

- Hot water supply temperature(s)
- Hot water return temperature(s)
- Boiler status
- Hot water flow

Exhaust fans

- Status
- Speed or cfm(if applicable)

The installed BAS system shall have the ability to perform trending and data gathering consistent with the demands of the client. New control points will require the use of existing Automated Logic controllers or the installation of new controllers.

D3070 SYSTEMS TESTING AND BALANCING

Provide complete Testing and Balancing (TAB) of all new or modified air and water distribution systems and HVAC equipment. The contractor is responsible for hiring an independent third-party NEBB certified Test & Balance firm to perform independent inspections, testing, re-balancing and verification of the air and water distribution systems.

Systems to be commissioned include, but are not limited to the following systems: HVAC systems, HVAC control systems, hot water systems, DDC systems, and Testing, Adjusting and Balancing.

D40 FIRE PROTECTION SYSTEMS

D4010 FIRE ALARM AND DETECTION SYSTEMS

Maintain the existing associated interlocks and operation of the fire alarm/mass notification system protocol/sequencing for monitoring and control functions associated with the existing equipment. Ensure compliance with UFC and NFPA criteria.

D50 ELECTRICAL

The electrical design shall comply with the design criteria specified in UFC 3-501-01, *Electrical Engineering*, and its referenced documents.

D5010 ELECTRICAL SERVICE & DISTRIBUTION

Provide an insulated equipment grounding conductor in all raceways for systems operating at greater than 50 volts.

Panelboards shall comply with UL 67 and UL 50.

Provide molded case circuit breakers in accordance with UL 489.

Fusible Disconnect Switches: Heavy Duty, Single Throw: UL 98 and NEMA KS 1, Type HD
Nonfusible Disconnect Switches: Heavy Duty, Single Throw: UL 98, Type HD.

Full-Voltage Magnetic Controllers: Full voltage, non-reversing, electrically held.

Combination Magnetic Controller: Fusible disconnecting means, and with auxiliary contacts.

D5020 LIGHTING & BRANCH WIRING

Not Used.

F20 SELECTIVE BUILDING DEMOLITION

F2020 HAZARDOUS COMPONENT ABATEMENT

Prior to the start of the work the ECATTS trained contractor is required to inspect the work area with the designer of record, and government representative to address existing potentially hazardous components as part of the work. The contractor is required to provide a list of hazardous components, locations and quantities that must be addressed as part of the work.

Private Qualified Person (PQP)

The Contractor is required to hire a PQP to ensure compliance with the approved work plans and perform independent inspections, testing and verification of the hazardous components work including: asbestos and lead containing paint.

G40 SITE ELECTRICAL UTILITIES

G4010 ELECTRICAL DISTRIBUTION

The electrical design shall comply with the design criteria specified in UFC 3-501-01, *Electrical Engineering*.

All primary distribution systems must be designed as four wire, multi-grounded systems that are wye connected at the source transformer. A system grounded neutral conductor must be provided throughout the system. Equipment intended to interrupt current at fault levels must have interrupting ratings sufficient for the nominal circuit voltage and the current that is available at the line terminals of the equipment.

Equipment foundation pads must be 200 mm (8 in) thick; pre-cast concrete pads can be used. Ensure a minimum of 3 m (10 ft) clear workspace in front of pad-mounted equipment for hot stick work. Provide bollards in areas where equipment is subject to vehicular damage.

Part 3 Statement of Work / Project Program – Building 3016

Table of Contents

CHAPTERS

1. PROJECT DESCRIPTION

2. PROJECT OBJECTIVES

3. SITE ANALYSIS

4. BUILDING REQUIREMENTS

5. ROOM REQUIREMENTS (Not Used)

6. ENGINEERING SYSTEMS REQUIREMENTS

B30 Roofing
C10 Interior Construction
C20 Stairs
C30 Interior Finishes
D10 Conveying Systems
D20 Plumbing
D30 HVAC
D40 Fire Protection Systems
D50 Electrical Power and Lighting
E10 Equipment
E20 Furnishings
F10 Special Construction
F20 Selective Building Demo
G10 Site Preparations
G20 Site Improvements
G30 Site Civil/Mechanical Utilities
G40 Site Electrical Utilities

All work described in this section is included as part of the OPTION 1 BID Package.

1.0 PROJECT DESCRIPTION

1.1 Overview

A new Industrial Controls System (ICS) infrastructure is currently planned for JNTEXP Little Creek. The ICS will provide a secure network where Direct Digital Control (DDC), Advanced Metering Infrastructure (AMI) and Supervisory Control and Data Acquisition (SCADA) systems will be accessible from a single location by operations staff. (The ICS installation and programming are not part of this contract.)

As part of this projects development, Building 3016 has gone through retro-commissioning for HVAC and DDC systems. This project includes the scope required for the installation of new DDC control points. Additionally, the project includes a number of corrective actions and energy conservation measures (ECMs) which will improve overall facility operations and energy efficiency.

1.2 Project Components

The scope for Building 3016 includes:

- HVAC
  - Repairs/Improvements
  - Additional Control Points
- Hot Water System Repairs
- Chilled Water System Repairs
- Chiller Repairs
- Boiler Repairs
- Steam System Repairs
- BAS/EMS Logic Repairs

2.0 PROJECT OBJECTIVES

The overall ICS project is designed to provide a secure network where key utility and building performance data will be accessible from a single location; to provide improvements at Building 3016 to feed into this new secure network; and to provide energy savings.

The portion of the project executed under this contract will provide improvements at buildings to allow them to feed into this new secure network, and provide energy savings. These savings are intended, through Navy funding programs, to establish a payback for the entire project.

2.1 Applicable Codes and Standards

In addition to the codes and standards listed in Part 4, the design and construction shall be in accordance with the latest revision/edition of the DoD Unified Facilities Criteria (UFC). The term "Latest Revision/Edition" is defined as the version as of the project award date.

Unified Federal Criteria (UFC)

- UFC 1-200-01, General Building Requirements, with Change 3
- UFC 1-200-02, High Performance Sustainable Buildings
- FC 1-300-09N, Navy and Marine Corps Design Procedures, with Change 2
- UFC 2-000-05N, Facility Planning for Navy and Marine Corps Shore Installations, (formerly known as P-80)
- UFC 3-400-02, Design: Engineering Weather Data
- UFC 3-400-10N, Mechanical Engineering, with Change 1
- UFC 3-410-02N, Heating, Ventilating, Air Conditioning and Dehumidifying Systems, with Change 2
- UFC 3-410-04N, Industrial Ventilation
- UFC 3-420-01, Plumbing Systems, with Change 10
- UFC 3-450-01, Noise and Vibration Control
- UFC 3-501-01, Electrical Engineering
- UFC 3-520-01, Interior Electrical Systems
- UFC 3-530-01, Design: Interior, Exterior Lighting and Controls, with Change 1
- UFC 3-550-01, Exterior Electrical Power Distribution, with Change 1
- UFC 3-560-01, Electrical Safety, O&M, with Change 5
- UFC 3-570-02N, Electrical Engineering Cathodic Protection
- UFC 3-580-01, Telecommunications Building Cabling Systems Planning and Design
- UFC 3-580-10, Navy and Marine Corps Intranet (NMCI) Standard Construction Practices, with Changes 1-3
- UFC 3-600-01, Fire Protection Engineering for Facilities, with Change 3
- UFC 4-010-01, DoD Minimum Antiterrorism Standards for Buildings, with Change 1
- UFC 4-010-02, DoD Minimum Standoff Distances for Buildings

Refer to UFGS 01 33 10.05 20 for additional information regarding applicable UFC documents.

Additional Standards

- NFPA 70

2.2 Sustainable Design

Design and construct project per sustainability requirements identified in Section 01 33 29.05 20, Sustainability Requirements For Design-Build. Additional specific sustainability requirements are found in this document.

2.3 Stormwater Management - Low Impact Development (LID)

Not applicable – project scope does not include any site work.

3.0 SITE ANALYSIS

3.1 Workflow Process

The Contractor shall develop a working schedule in coordination with NAVFAC Mid-Atlantic. The working schedule shall include design of all elements of the project and commissioning. The Contractor shall coordinate his work with on-going base activities.

The Contractor shall be responsible for preparing, submitting and obtaining all permits that may be required by the Commonwealth of Virginia, the local government, SHPO, and other jurisdictional entities for work under this contract.

The Contractor is also responsible for preparing, submitting, and obtaining air pollution control permits, as necessary, with NAVFAC.

The Contractor shall consult with NAVFAC and JNTEXP Little Creek to establish staging and lay-down areas that shall minimize disruption to activities adjacent to the site. Refer to Part 2 of this RFP for details.

4.0 BUILDING REQUIREMENTS

4.1 EXISTING CONDITIONS

Building 3016 is a two story facility that is used as a library, parlor recreation facility, and a continuing education facility equipped with classrooms and computer labs. The building is approximately 38,000 square feet. The cooling and heating for the building is provided by an air cooled chiller, and a steam to hot water heat exchanger. The HVAC system also includes several air handling units, and variable air volume unit.

The heating and cooling system are controlled by an Automated Logic System, while the ventilation system is controlled by Siemens. The lighting in the building consists of 2x4-2 to 4 lamp diffuser and parabolic lay-in T8 fluorescent fixtures. The building is also illuminated by 1x4- 2 lamp T8 surface mount, pendant mount, and lay-in fluorescent fixtures. In addition, recessed CFL units were also used. Motion and daylight sensors were observed throughout the building. Exit and emergency fixtures were well positioned and properly operating.

Maintenance is being performed to address emergency situations, rather than as a preventive measure. In addition, several condensate pumps have failed, and air handling units require attention.

4.2 PROJECT SCOPE

Contractor shall conduct the following corrective actions identified in the scope column of each of the system tables.

The contractor shall, for any hydronic system that is mentioned below, install 4 temperature and 4 pressure gauges and ensure proper communication to the BAS.

Upon completion of corrective actions, the contractor shall then re-commission the affected systems identified in the corrective actions. Contractor shall utilize the Functional Performance Tests which will be provided to successful bidder.. Testing shall be conducted on systems identified in the above tables and will test system DDC control components involved with temperature settings, air flow volume, air quality, percent outside air volume, humidity, and all other pertinent parameters. Testing shall emphasize the assessment of individual mechanical component performance and response to DDC commands, as well as how the entire system interactively functions in order to pinpoint operational flaws and the best opportunities for optimization.

Once installation of new equipment and functional performance testing is completed, the contractor shall hire an independent third-party NEBB certified Test & Balance firm to conduct testing and balancing on all air and water side systems that have had work performed on them as part of this contract.

**For all activities, where DDC personnel are required, the contractor shall contact the NAVFAC PWD DDC personnel. The DDC personnel shall be notified 10 business days prior to any activities, where DDC assistance is required. The contractor shall not access, make adjustments or make changes to any DDC related components without prior authorization from the DDC POC.

HVAC

Issue	Tag	Quantity	Existing Condition	Scope
001	AHU-1	2	Incorrect belt size. Belt size is AX48.	Replace the belts with a correctly sized belt.
002	AHU-3	1	Damper is not attached to the actuator. The dampers were locked in position and the actuator would modulate freely.	Correct the connection between the actuator and dampers.
003	AHU-1, 2 & 3	3	Units have a filter box (replaced annually) and disposable filters (to enhance the lifespan of the filter boxes)/ The 12x24x2 disposable filters are not placed and caused the 12x24x12 filter boxes to be completely filthy.	Replace filter boxes and disposable filters.
004	AHU-1	3	The unit has three air flow measuring stations, neither of which are measuring correctly.	Re-calibrate airflow monitoring devices.
005	AHU-1	2	The unit static pressure setpoint is 1.5” but the unit is only making 0.83”. This is possibly the result of two differently sized fan belts.	Correct the belt sizes.
006	AHU-2	1	The exhaust air damper is	Repair actuator.

			spinning on the shaft.	
007	AHU-2	1	The system is calling for economizer mode but the outside air damper is closed.	Correct damper.
008	AHU-2	1	The space humidity sensor is reading 2251%.	Recalibrate/replace the humidity sensor.
009	AHU-3	1	The face and bypass damper connecting rod is not connected to the actuator.	Repair actuator/damper.
010	AHU-3	1	The return damper shaft is spinning freely on the actuator.	Repair actuator.
011	Ceiling Fans		Ceiling fans run 24/7 because the pull cords have broken off. No switches were ever provided for the fans	Add ceiling fan speed control switch or new units with remote control.

Hot Water System

Issue	Tag	Quantity	Existing Condition	Scope
001	HX-1	1	The condensate return system is not working properly. Significant steam condensate water is being forced out of the building onto the steam PRV station.	Repair condensate pump and verify condensate system operation.

Chilled Water System

Issue	Tag	Quantity	Existing Condition	Scope
001	P-2	1	Pump seems to be cavitating.	

Insulation/Piping Repairs

Issue	Tag	Quantity	Existing Condition	Scope
001	HX-1	1	The steam PRV system is located outside the building in the elements. The insulation has eroded and constant dampness creates significant heat loss.	Repair/replace the steam PRV insulation and construct a small insulated shed to protect the system from the elements and conserve energy.

BAS/EMS Logic Repairs

Issue	Tag	Quantity	Existing Condition	Scope
001	AHU-2	1	Return fan does not shut off when supply fan is shut off, even though the return fan is in 'AUTO.'	Correct the sequence on the Siemens DDC.
002	CH-1	1	The new chiller was found in alarm at the local control panel. Both circuits have been off on alarm (low evaporator pressure) for a month as no	Connect a chiller general alarm and status to the BAS.

			alarm was sent to the BAS. There is no status signal or general alarm to communicate problems to the O&M staff.	
003	BAS	175	Move building BAS system from Siemens to base standard ALC.	Migrate 175 control points from the Siemens system to the ALC including graphics and trending: • 27 room sensors on floor 1 • 23 room sensors on floor 2 • 25 points per AHU (qty4) • 13 point for the chiller • 10 points for steam HX • 2 points for domestic hot water.

5.0 ROOM REQUIREMENTS

Not Used.

6.0 ENGINEERING SYSTEMS REQUIREMENTS (ESR)

B30 Roofing – *(Not Used)*
C10 Interior Construction – *(Not Used)*
C20 Stairs – *(Not Used)*
C30 Interior Finishes
D10 Conveying Systems – *(Not Used)*
D20 Plumbing – *(Not Used)*
D30 HVAC
D40 Fire Protection Systems
D50 Electrical Power and Lighting
E10 Equipment – *(Not Used)*
E20 Furnishings – *(Not Used)*
F10 Special Construction – *(Not Used)*
F20 Selective Building Demo – *(Not Used)*
G10 Site Preparations – *(Not Used)*
G20 Site Improvements – *(Not Used)*
G30 Site Civil/Mechanical Utilities – *(Not Used)*
G40 Site Electrical Utilities

C30 INTERIOR FINISHES

C3010 WALL FINISHES

All interior concrete masonry partitions shall be painted.

Unless noted otherwise, all interior gypsum board wall partitions shall be painted gypsum board.

C3020 FLOOR FINISHES

Not Used.

C3030 CEILING FINISHES

Primary ceiling finish shall be 24 inch by 24 inch by 5/8 inch minimum thickness suspended acoustical panel ceiling system, except provide a suspended gypsum board ceiling in entrance lobby, and restrooms.

Ceiling finish material shall be painted gypsum board.

C3040 INTERIOR COATINGS AND SPECIAL FINISHES

Where any new surfaces are required (i.e., due to cutting/patching for HVAC work), paint to match previously painted interior surfaces. Surfaces requiring painting may include walls, doors, trim, ceilings as well as all interior exposed metal items, to include interior grilles, registers, diffusers, access panels, and panel boxes.

D20 PLUMBING

Not Used

D30 HVAC

HVAC System Requirements

Provide air conditioning and heating for spaces as indicated and for the following Design conditions:

Outside Conditions

Summer	91	Degrees F dry bulb	Winter	21	Degrees F
	76	Degrees F wet bulb			

Inside Conditions

Summer	23.8	Degrees C dry bulb	Winter	20	Degrees C
	75	Degrees F dry bulb		68	Degrees F
	50	%RH			

Heating & Ventilating Inside Conditions

Summer	80	Degrees F dry bulb		55	Degrees F
	6	[Air changes per hour]			

Provide Ventilation rates and systems per the latest edition of ASHRAE Standard 62, *Ventilation for Acceptable Indoor Air Quality*.

The HVAC system shall provide each zone with the choice of heating or cooling year round unless otherwise indicated. Each zone shall have its own limited range of control, as allowed by the control system central workstation.

Provide protective coatings on casings and coils which come in contact with outside air.

D3020 HEAT GENERATING SYSTEMS

Not Used.

D3030 COOLING GENERATING SYSTEMS

Chilled Water Systems

Provide connection to and extension of the existing central chilled water system for service to the building HVAC equipment.

D3040 DISTRIBUTION SYSTEMS

Air Distribution, Heating & Cooling

Provide insulated, galvanized steel ductwork. Provide double wall, preinsulated ductwork in public areas when exposed.

Provide aluminum grilles, registers, and diffusers. Provide filter grilles for return air.

Provide ceiling mounted circulation fan for warehouse space.

Water Distribution Systems
Provide repairs specified in Chapter 4 to hot and chilled water systems to serve the HVAC equipment throughout the facility.

D3050 TERMINAL & PACKAGE UNITS

Not Used.

D3060 CONTROLS AND INSTRUMENTATION

HVAC Controls

Provide a complete direct digital control (DDC) system which will communicate with the existing DDC system. The existing building DDC system is Siemens which shall be converted to operate with existing base wide system manufactured by Automated Logic.

DDC Control points shall be added to each piece of equipment indicated in Chapter 4 and programmed to be operated and monitored via the existing DDC system.

New or replacement equipment installed by contractor shall have at minimum the following control points

Air handling units

- Supply air temperature
- Return air temperature
- Outside air temperature (can be a global point)
- All post coil temperatures (air temperature after each coil)
- Fan speed or VFD Hrtz
- Fan status
- Filter Differential Pressure (DP)

- Return air CO2 concentrations
- Outside air CO2 (can be a global point)
- Hydronic valve positions
- Outside Air damper position
- Return Air damper position
- Relief Air damper position

Terminal air units

- Damper position
- Zone temperature set point
- Zone temperature
- Zone CO2
- Fan status (if fan present)
- Supply air temperature
- Hydronic valve position

Hydronic HVAC pumps

- Pump status
- VFD speed
- Pump status
- Pump Delta P (Pressure)

Boiler

- Hot water supply temperature(s)
- Hot water return temperature(s)
- Boiler status
- Hot water flow

Exhaust fans

- Status
- Speed or cfm(if applicable)

The installed BAS system shall have the ability to perform trending and data gathering consistent with the demands of the client. New control points will require the use of existing Automated Logic controllers or the installation of new controllers.

D3070 SYSTEMS TESTING AND BALANCING

Provide complete Testing and Balancing (TAB) of all new or modified air and water distribution systems and HVAC equipment. The contractor is responsible for hiring an independent third-party NEBB certified Test & Balance firm to perform independent inspections, testing, re-balancing and verification of the air and water distribution systems.

Systems to be commissioned include, but are not limited to the following systems: HVAC systems, HVAC control systems, hot water systems, DDC systems, and Testing, Adjusting and Balancing.

D40 FIRE PROTECTION SYSTEMS

D4010 FIRE ALARM AND DETECTION SYSTEMS

Maintain the existing associated interlocks and operation of the fire alarm/mass notification system protocol/sequencing for monitoring and control functions associated with the existing equipment. Ensure compliance with UFC and NFPA criteria.

D50 ELECTRICAL

The electrical design shall comply with the design criteria specified in UFC 3-501-01, *Electrical Engineering*, and its referenced documents.

D5010 ELECTRICAL SERVICE & DISTRIBUTION

Provide an insulated equipment grounding conductor in all raceways for systems operating at greater than 50 volts.

Panelboards shall comply with UL 67 and UL 50.

Provide molded case circuit breakers in accordance with UL 489.

Fusible Disconnect Switches: Heavy Duty, Single Throw: UL 98 and NEMA KS 1, Type HD
Nonfusible Disconnect Switches: Heavy Duty, Single Throw: UL 98, Type HD.

Full-Voltage Magnetic Controllers: Full voltage, non-reversing, electrically held.

Combination Magnetic Controller: Fusible disconnecting means, and with auxiliary contacts.

D5020 LIGHTING & BRANCH WIRING

Not Used.

F20 SELECTIVE BUILDING DEMOLITION

F2020 HAZARDOUS COMPONENT ABATEMENT

Prior to the start of the work the ECATTS trained contractor is required to inspect the work area with the designer of record, and government representative to address existing potentially hazardous components as part of the work. The contractor is required to provide a list of hazardous components, locations and quantities that must be addressed as part of the work.

Private Qualified Person (PQP)

The Contractor is required to hire a PQP to ensure compliance with the approved work plans and perform independent inspections, testing and verification of the hazardous components work including: asbestos and lead containing paint.

G40 SITE ELECTRICAL UTILITIES

G4010 ELECTRICAL DISTRIBUTION

The electrical design shall comply with the design criteria specified in UFC 3-501-01, *Electrical Engineering*.

All primary distribution systems must be designed as four wire, multi-grounded systems that are wye connected at the source transformer. A system grounded neutral conductor must be provided throughout the system. Equipment intended to interrupt current at fault levels must have interrupting ratings sufficient for the nominal circuit voltage and the current that is available at the line terminals of the equipment.

Equipment foundation pads must be 200 mm (8 in) thick; pre-cast concrete pads can be used. Ensure a minimum of 3 m (10 ft) clear workspace in front of pad-mounted equipment for hot stick work. Provide bollards in areas where equipment is subject to vehicular damage.

Part 3 Statement of Work / Project Program – Building 3854

Table of Contents

CHAPTERS

1. PROJECT DESCRIPTION

2. PROJECT OBJECTIVES

3. SITE ANALYSIS

4. BUILDING REQUIREMENTS

5. ROOM REQUIREMENTS (Not Used)

6. ENGINEERING SYSTEMS REQUIREMENTS

B30 Roofing
C10 Interior Construction
C20 Stairs
C30 Interior Finishes
D10 Conveying Systems
D20 Plumbing
D30 HVAC
D40 Fire Protection Systems
D50 Electrical Power and Lighting
E10 Equipment
E20 Furnishings
F10 Special Construction
F20 Selective Building Demo
G10 Site Preparations
G20 Site Improvements
G30 Site Civil/Mechanical Utilities
G40 Site Electrical Utilities

All work described in this section is included as part of the OPTION 1 BID Package.

1.0 PROJECT DESCRIPTION

1.1 Overview

A new Industrial Controls System (ICS) infrastructure is currently planned for JNTEXP Little Creek. The ICS will provide a secure network where Direct Digital Control (DDC), Advanced Metering Infrastructure (AMI) and Supervisory Control and Data Acquisition (SCADA) systems will be accessible from a single location by operations staff. (The ICS installation and programming are not part of this contract.)

As part of this projects development, Building 3854 has gone through retro-commissioning for HVAC and DDC systems. This project includes the scope required for the installation of new DDC control points. Additionally, the project includes a number of corrective actions and energy conservation measures (ECMs) which will improve overall facility operations and energy efficiency.

1.2 Project Components

The scope for Building 3854 includes:

- HVAC
  - Repairs/Improvements
  - Additional Control Points
- Hot Water System Repairs
- Chilled Water System Repairs
- Boiler Repairs
- Insulation/Piping Repairs
- BAS/EMS Logic Repairs

2.0 PROJECT OBJECTIVES

The overall ICS project is designed to provide a secure network where key utility and building performance data will be accessible from a single location; to provide improvements at Building 3854 to feed into this new secure network; and to provide energy savings.

The portion of the project executed under this contract will provide improvements at buildings to allow them to feed into this new secure network, and provide energy savings. These savings are intended, through Navy funding programs, to establish a payback for the entire project.

2.1 Applicable Codes and Standards

In addition to the codes and standards listed in Part 4, the design and construction shall be in accordance with the latest revision/edition of the DoD Unified Facilities Criteria (UFC). The term "Latest Revision/Edition" is defined as the version as of the project award date.

Unified Federal Criteria (UFC)

- UFC 1-200-01, General Building Requirements, with Change 3
- UFC 1-200-02, High Performance Sustainable Buildings
- FC 1-300-09N, Navy and Marine Corps Design Procedures, with Change 2
- UFC 2-000-05N, Facility Planning for Navy and Marine Corps Shore Installations, (formerly known as P-80)
- UFC 3-400-02, Design: Engineering Weather Data
- UFC 3-400-10N, Mechanical Engineering, with Change 1
- UFC 3-410-02N, Heating, Ventilating, Air Conditioning and Dehumidifying Systems, with Change 2
- UFC 3-410-04N, Industrial Ventilation
- UFC 3-420-01, Plumbing Systems, with Change 10
- UFC 3-450-01, Noise and Vibration Control
- UFC 3-501-01, Electrical Engineering
- UFC 3-520-01, Interior Electrical Systems
- UFC 3-530-01, Design: Interior, Exterior Lighting and Controls, with Change 1
- UFC 3-550-01, Exterior Electrical Power Distribution, with Change 1
- UFC 3-560-01, Electrical Safety, O&M, with Change 5
- UFC 3-570-02N, Electrical Engineering Cathodic Protection
- UFC 3-580-01, Telecommunications Building Cabling Systems Planning and Design
- UFC 3-580-10, Navy and Marine Corps Intranet (NMCI) Standard Construction Practices, with Changes 1-3
- UFC 3-600-01, Fire Protection Engineering for Facilities, with Change 3
- UFC 4-010-01, DoD Minimum Antiterrorism Standards for Buildings, with Change 1
- UFC 4-010-02, DoD Minimum Standoff Distances for Buildings

Refer to UFGS 01 33 10.05 20 for additional information regarding applicable UFC documents.

Additional Standards

- NFPA 70

2.2 Sustainable Design

Design and construct project per sustainability requirements identified in Section 01 33 29.05 20, Sustainability Requirements For Design-Build. Additional specific sustainability requirements are found in this document.

2.3 Stormwater Management - Low Impact Development (LID)

Not applicable – project scope does not include any site work.

3.0 SITE ANALYSIS

3.1 Workflow Process

The Contractor shall develop a working schedule in coordination with NAVFAC Mid-Atlantic. The working schedule shall include design of all elements of the project and commissioning. The Contractor shall coordinate his work with on-going base activities.

The Contractor shall be responsible for preparing, submitting and obtaining all permits that may be required by the Commonwealth of Virginia, the local government, SHPO, and other jurisdictional entities for work under this contract.

The Contractor is also responsible for preparing, submitting, and obtaining air pollution control permits, as necessary, with NAVFAC.

The Contractor shall consult with NAVFAC and JNTEXP Little Creek to establish staging and lay-down areas that shall minimize disruption to activities adjacent to the site. Refer to Part 2 of this RFP for details.

4.0 BUILDING REQUIREMENTS

4.1 EXISTING CONDITIONS

Building 3854 is a two story facility that is used as department store that is used as an operations facility, and is equipped with training classrooms and administrative offices. The facility was built in 1999, and is approximately 59,000 square feet. The building uses a dual temperature system, and is served by air handling units, variable air volume boxes, and a chiller.

The majority of the air side equipment was controlled by an electro-pneumatic system. The water side equipment was operated by electronic direct digital control. Lighting in the building consists of 2x4, 2 lamp, diffuser lay-in T8 fluorescent fixtures. The building was also illuminated by 1x4-2 lamp, T8 surface mount fluorescent fixtures, and high bay mercury vapor fixtures. Motion sensors and daylighting control was not observed in the facility. Exit fixtures were not working properly in general.

Maintenance is being performed to address emergency situations, rather than as a preventive measure. In addition, the air handling units and pipe insulation require attention.

4.2 PROJECT SCOPE

Contractor shall conduct the following corrective actions identified in the scope column of each of the system tables.

The contractor shall, for any hydronic system that is mentioned below, install 4 temperature and 4 pressure gauges and ensure proper communication to the BAS.

Upon completion of corrective actions, the contractor shall then re-commission the affected systems identified in the corrective actions. Contractor shall utilize the Functional Performance Tests from Part 6. Testing shall be conducted on systems identified in the above tables and will test system DDC control components involved with temperature settings, air flow volume, air quality, percent outside air volume, humidity, and all other pertinent parameters. Testing shall emphasize the assessment of individual mechanical component performance and response to DDC commands, as well as how the entire system interactively functions in order to pinpoint operational flaws and the best opportunities for optimization.

Once installation of new equipment and functional performance testing is completed, the contractor shall hire an independent third-party NEBB certified Test & Balance firm to conduct testing and balancing on all air and water side systems that have had work performed on them as part of this contract.

**For all activities, where DDC personnel are required, the contractor shall contact the NAVFAC PWD DDC personnel. The DDC personnel shall be notified 10 business days prior to any activities, where DDC assistance is required. The contractor shall not access, make adjustments or make changes to any DDC related components without prior authorization from the DDC POC.

HVAC

Issue	Tag	Quantity	Existing Condition	Scope
001	AHU-1 & 3	2	Chilled water coil is dirty.	Clean chilled water coil.
002	AHU-1	1	OA damper is closed completely due to corrosion and rust.	Repair OA damper so that it can function properly.
003	AHU-3	1	AHU-3 filters are dirty.	Replace filters.
004	AHU-3	1	OA damper was only able to open to 95% open due to corrosion and rust.	Repair damper so that it can function properly.
005	AHU-4	1	AHU-4 filters are damaged.	Replace filters.
006	AHU-4	1	Supply fan bearings are loos and making sounds.	Repair/replace supply fan bearing.
007	AHU-5	1	Heating coil is dirty.	Clean heating coil.
008	AHU-5	2	OA and RA dampers do not actuate.	Repair OA and RA dampers so that they function properly.
009	RTU-1	1	OA actuator is disconnected and hanging freely within the unit.	Repair/replace OA actuator.
010	RTU-1	1	OA damper is locked in place due to rust and corrosion.	Replace OA damper.
011	RTU-1	1	Coils are dirty.	Replace coils.
012	RTU-1	1	There are no filters in the unit, causing extreme coil blockage.	Install filters.
013	RTU-1	1	Unit was found tripped on	Replace entire unit.

			freeze stat and has been off for two months. Coil blockage would not allow any air heating.	
014	AHU-2	1	Unit was found in November with a broken fan. The fan was replaced and not properly tightened. The new fan was found destroyed.	Replace fan and properly tighten to rack.
015	AHU-6	1	AHU-6 is low on refrigerant.	Add refrigerant, repair any damages that may have caused refrigerant leak.
016	VAVs		Several VAVs are offline.	Diagnose and repair VAVs.

Hot Water System

Issue	Tag	Quantity	Existing Condition	Scope
001	Boiler	1	After the boiler ran for a while, the water would heat up and expand, causing the PRV valve to let loose. Cold make up water is being introduced to the hot water system.	Replace the PRV and investigate expansion tank for possible interior damage.
002	HWPs	2	5 HP VFD pump motors have no VFDs.	Furnish and install (2) VFD controllers to (2) hot water pump motors to allow variable speed functionality. Install a pressure sensor near the end of the water loop to provide control over the variable frequency drive. New VFDs shall be connected to the existing pump power distribution system and existing pumps. Provide BAS points to control/monitor the systems' operation including at a minimum the following functions: start/stop, status, flowrate, speed, alarm. Place the VFDs within 20 feet of existing equipment.

Chilled Water System

Issue	Tag	Quantity	Existing Condition	Scope
001	CHWPs	2	Pumps have no VFDs.	Replace (2) 7.5hp motors

				with equivalent, high efficiency units. Provide BAS points to control/monitor the systems' operation including at a minimum the following functions: start/stop, status, flowrate.

Insulation/Piping Repairs

Issue	Tag	Quantity	Existing Condition	Scope
001	AHU-3	1	4" chilled water pipe insulation is damaged (appx 6LF & 50ft of PVC jacket).	Replace damaged insulation.
002	AHU-4	1	Ceiling tiles around AHU-4 are missing and causing thermal loss.	Replace ceiling tiles.
003	Envelope	1	There is no insulation or vapor barrier in the ceiling of the building.	Install insulation above ceiling tiles.

BAS/EMS Logic Repairs

Issue	Tag	Quantity	Existing Condition	Scope
001	AHU-1 & 3	2	Outside air AFMS for BAS and EBTRON are reading differently and do not equal to total air discharge.	Recalibrate both AFMS.
002	AHU-1	1	RA damper opens to 100%, although the DDC indicates it is 25% open. At 0% open on the DDC, the damper is completely closed.	Balance damper to match the BAS with actual conditions.
003	AHU-1	1	VAV-9 cannot communicate to DDC.	Repair VAV-9 communication to DDC.
004	OA Louver	1	The OA louver located in the mechanical room of AHU-3 is open, causing cold OA to enter while the room unit heater runs continuously. No sequence was found for this system.	Connect the louver to the BAS to actuate closed as appropriate.
005	RTU-1	1	Economizer mode has been disabled (due to OA damper locked in place).	Once OA damper is operable (HVAC Issue #010), enable economizer.
006	OA Louver	2	The two OA louvers located in the boiler room were found wide open to OA, causing cold OA to enter while the room unit heater runs continuously. No sequence was found for this	Connect the louvers to the BAS to actuate closed as appropriate. Tie the louvers to the boiler control for combustion air and room supply fan for summer

			system.	temperature control.
007	AHU-1 & 2	2	CO2 setpoints for AHU-1 & 2 is 1,500ppm.	Reset CO2 setpoint to base standard.
008	Locker Room	4	There is no humidity control in the locker room.	Install humidity sensors and connect to BAS.

5.0 ROOM REQUIREMENTS

Not Used.

6.0 ENGINEERING SYSTEMS REQUIREMENTS (ESR)

B30 Roofing – *(Not Used)*
C10 Interior Construction – *(Not Used)*
C20 Stairs – *(Not Used)*
C30 Interior Finishes
D10 Conveying Systems – *(Not Used)*
D20 Plumbing – *(Not Used)*
D30 HVAC
D40 Fire Protection Systems
D50 Electrical Power and Lighting
E10 Equipment – *(Not Used)*
E20 Furnishings – *(Not Used)*
F10 Special Construction – *(Not Used)*
F20 Selective Building Demo – *(Not Used)*
G10 Site Preparations – *(Not Used)*
G20 Site Improvements – *(Not Used)*
G30 Site Civil/Mechanical Utilities – *(Not Used)*
G40 Site Electrical Utilities

C30 INTERIOR FINISHES

C3010 WALL FINISHES

All interior concrete masonry partitions shall be painted.

Unless noted otherwise, all interior gypsum board wall partitions shall be painted gypsum board.

C3020 FLOOR FINISHES

Not Used.

C3030 CEILING FINISHES

Primary ceiling finish shall be 24 inch by 24 inch by 5/8 inch minimum thickness suspended acoustical panel ceiling system, except provide a suspended gypsum board ceiling in entrance lobby, and restrooms.

Ceiling finish material shall be painted gypsum board.

C3040 INTERIOR COATINGS AND SPECIAL FINISHES

Where any new surfaces are required (i.e., due to cutting/patching for HVAC work), paint to match previously painted interior surfaces. Surfaces requiring painting may include walls, doors, trim, ceilings as well as all interior exposed metal items, to include interior grilles, registers, diffusers, access panels, and panel boxes.

D30 HVAC

HVAC System Requirements

Provide air conditioning and heating for spaces as indicated and for the following Design conditions:

Outside Conditions

Summer	91	Degrees F dry bulb	Winter	21	Degrees F
	76	Degrees F wet bulb			

Inside Conditions

Summer	23.8	Degrees C dry bulb	Winter	20	Degrees C
	75	Degrees F dry bulb		68	Degrees F
	50	%RH			

Heating & Ventilating Inside Conditions

Summer	80	Degrees F dry bulb	Winter	55	Degrees F
	6	Air changes per hour			

Provide Ventilation rates and systems per the latest edition of ASHRAE Standard 62, *Ventilation for Acceptable Indoor Air Quality*.

The HVAC system shall provide each zone with the choice of heating or cooling year round unless otherwise indicated. Each zone shall have its own limited range of control, as allowed by the control system central workstation.

Provide protective coatings on casings and coils which come in contact with outside air.

D3020 HEAT GENERATING SYSTEMS

Equipment Thermal Insulation
Provide Insulation for hot and chilled water pumps and equipment. Provide vapor barrier for chilled water applications.

D3030 COOLING GENERATING SYSTEMS

Chilled Water Systems

Provide connection to and extension of the existing central chilled water system for service to the building HVAC equipment.

D3040 DISTRIBUTION SYSTEMS

Air Distribution, Heating & Cooling

Provide insulated, galvanized steel ductwork. Provide double wall, preinsulated ductwork in public areas when exposed.

Provide aluminum grilles, registers, and diffusers. Provide filter grilles for return air.

Water Distribution Systems
Repair hot and chilled water system to serve the HVAC equipment throughout the facility.

Air Handling Units
Provide constant volume air handlers. Provide with 50% filters.

Other Distribution Systems
Provide base mounted circulating pumps with VFD drives to operate in conjunction with new pressure sensors

Chilled Water and Hot Water Distribution Systems
Install Variable Frequency Drives (VFDs) on chilled water and hot water pumps identified in Chapter 4. Replace pumps as necessary if not compatible with VFDs. Replace electric motors on all pumps to be equipped with VFDs.

Variable frequency drives shall be located within 20 feet of the pumps.

Factory-assembled variable frequency drive control systems for variable speed control.

All pump VFD's shall be from the same manufacturer. Each VFD shall include motor starter, motor disconnects and controls as required for a complete system.

Units shall be UL-listed and comply with the National Electric Code.

The pump motor shall be NEMA premium efficient TEFC motor, inverter duty, specifically designed and insulated for variable speed pump duty. Provide ceramic bearings and shaft grounding ring to protect motor bearings from variable frequency drive induced currents.

The motor shall have a minimum 1.15 service factor and the service factor beyond shall not be considered available for the load.

Motor and pump shall be statically and dynamically balanced for variable speed operation between 20 percent and 100 percent of full speed.

D3050 TERMINAL & PACKAGE UNITS

Package units
Provide packaged rooftop heat pump units to condition the facility.

D3060 CONTROLS AND INSTRUMENTATION

HVAC Controls

Provide a partial direct digital control (DDC) system which will communicate with the existing DDC system. The existing DDC system was manufactured by Automated Logic.

DDC Control points shall be added to each piece of equipment indicated in Chapter 4 and programmed to be operated and monitored via the existing DDC system.

New or replaced equipment installed by contractor shall have at minimum the following control points

Air handling units

- Supply air temperature
- Return air temperature
- Outside air temperature (can be a global point)
- All post coil temperatures (air temperature after each coil)
- Fan speed or VFD Hrtz
- Fan status
- Filter Differential Pressure (DP)
- Return air CO2 concentrations
- Outside air CO2 (can be a global point)
- Hydronic valve positions
- Outside Air damper position
- Return Air damper position
- Relief Air damper position

Terminal air units

- Damper position
- Zone temperature set point
- Zone temperature
- Zone CO2
- Fan status (if fan present)
- Supply air temperature
- Hydronic valve position

Hydronic HVAC pumps

- Pump status
- VFD speed
- Pump status
- Pump Delta P (Pressure)

Boiler

- Hot water supply temperature(s)
- Hot water return temperature(s)
- Boiler status
- Hot water flow

Exhaust fans

- Status
- Speed or cfm(if applicable)

The installed BAS system shall have the ability to perform trending and data gathering consistent with the demands of the client. New control points will require the use of existing Automated Logic controllers or the installation of new controllers.

D3070 SYSTEMS TESTING AND BALANCING

Provide complete Testing and Balancing (TAB) of all new or modified air and water distribution systems and HVAC equipment. The contractor is responsible for hiring an independent third-party NEBB certified Test & Balance firm to perform independent inspections, testing, re-balancing and verification of the air and water distribution systems.

Systems to be commissioned include, but are not limited to the following systems: HVAC systems, HVAC control systems, hot water systems, DDC systems, and Testing, Adjusting and Balancing.

D40 FIRE PROTECTION SYSTEMS

D4010 FIRE ALARM AND DETECTION SYSTEMS

Maintain the existing associated interlocks and operation of the fire alarm/mass notification system protocol/sequencing for monitoring and control functions associated with the existing equipment. Ensure compliance with UFC and NFPA criteria.

D50 ELECTRICAL

The electrical design shall comply with the design criteria specified in UFC 3-501-01, *Electrical Engineering*, and its referenced documents.

D5010 ELECTRICAL SERVICE & DISTRIBUTION

Provide an insulated equipment grounding conductor in all raceways for systems operating at greater than 50 volts.

Panelboards shall comply with UL 67 and UL 50.

Provide molded case circuit breakers in accordance with UL 489.

Fusible Disconnect Switches: Heavy Duty, Single Throw: UL 98 and NEMA KS 1, Type HD
Nonfusible Disconnect Switches: Heavy Duty, Single Throw: UL 98, Type HD.

Full-Voltage Magnetic Controllers: Full voltage, non-reversing, electrically held.

Combination Magnetic Controller: Fusible disconnecting means, and with auxiliary contacts.

D5020 LIGHTING & BRANCH WIRING

Not Used.

F20 SELECTIVE BUILDING DEMOLITION

F2020 HAZARDOUS COMPONENT ABATEMENT

Prior to the start of the work the ECATTS trained contractor is required to inspect the work area with the designer of record, and government representative to address existing potentially hazardous components as part of the work. The contractor is required to provide a list of hazardous components, locations and quantities that must be addressed as part of the work.

Private Qualified Person (PQP)

The Contractor is required to hire a PQP to ensure compliance with the approved work plans and perform independent inspections, testing and verification of the hazardous components work including: asbestos and lead containing paint.

G40 SITE ELECTRICAL UTILITIES

G4010 ELECTRICAL DISTRIBUTION

The electrical design shall comply with the design criteria specified in UFC 3-501-01, *Electrical Engineering*.

All primary distribution systems must be designed as four wire, multi-grounded systems that are wye connected at the source transformer. A system grounded neutral conductor must be provided throughout the system. Equipment intended to interrupt current at fault levels must have interrupting ratings sufficient for the nominal circuit voltage and the current that is available at the line terminals of the equipment.

Equipment foundation pads must be 200 mm (8 in) thick; pre-cast concrete pads can be used. Ensure a minimum of 3 m (10 ft) clear workspace in front of pad-mounted equipment for hot stick work. Provide bollards in areas where equipment is subject to vehicular damage.

Part 3 Statement of Work / Project Program – Building 3814

Table of Contents

CHAPTERS

1. PROJECT DESCRIPTION

2. PROJECT OBJECTIVES

3. SITE ANALYSIS

4. BUILDING REQUIREMENTS

5. ROOM REQUIREMENTS (Not Used)

6. ENGINEERING SYSTEMS REQUIREMENTS

B30 Roofing
C10 Interior Construction
C20 Stairs
C30 Interior Finishes
D10 Conveying Systems
D20 Plumbing
D30 HVAC
D40 Fire Protection Systems
D50 Electrical Power and Lighting
E10 Equipment
E20 Furnishings
F10 Special Construction
F20 Selective Building Demo
G10 Site Preparations
G20 Site Improvements
G30 Site Civil/Mechanical Utilities
G40 Site Electrical Utilities

All work described in this section is included as part of the OPTION 2 BID Package.

1.0 PROJECT DESCRIPTION

1.1 Overview

A new Industrial Controls System (ICS) infrastructure is currently planned for JNTEXP Little Creek. The ICS will provide a secure network where Direct Digital Control (DDC), Advanced Metering Infrastructure (AMI) and Supervisory Control and Data Acquisition (SCADA) systems will be accessible from a single location by operations staff. (The ICS installation and programming are not part of this contract.)

As part of this projects development, Building 3814 has gone through retro-commissioning for HVAC and DDC systems. This project includes the scope required for the installation of new DDC control points. Additionally, the project includes a number of corrective actions and energy conservation measures (ECMs) which will improve overall facility operations and energy efficiency.

1.2 Project Components

The scope for Building 3814 includes:

- HVAC
  - Repairs/Improvements
  - Additional Control Points
- BAS/EMS Logic Repairs

2.0 PROJECT OBJECTIVES

The overall ICS project is designed to provide a secure network where key utility and building performance data will be accessible from a single location; to provide improvements at Building 3814 to feed into this new secure network; and to provide energy savings.

The portion of the project executed under this contract will provide improvements at buildings to allow them to feed into this new secure network, and provide energy savings. These savings are intended, through Navy funding programs, to establish a payback for the entire project.

2.1 Applicable Codes and Standards

In addition to the codes and standards listed in Part 4, the design and construction shall be in accordance with the latest revision/edition of the DoD Unified Facilities Criteria (UFC). The term "Latest Revision/Edition" is defined as the version as of the project award date.

Unified Federal Criteria (UFC)

- UFC 1-200-01, General Building Requirements, with Change 3
- UFC 1-200-02, High Performance Sustainable Buildings
- FC 1-300-09N, Navy and Marine Corps Design Procedures, with Change 2
- UFC 2-000-05N, Facility Planning for Navy and Marine Corps Shore Installations, (formerly known as P-80)
- UFC 3-400-02, Design: Engineering Weather Data
- UFC 3-400-10N, Mechanical Engineering, with Change 1
- UFC 3-410-02N, Heating, Ventilating, Air Conditioning and Dehumidifying Systems, with Change 2
- UFC 3-410-04N, Industrial Ventilation
- UFC 3-420-01, Plumbing Systems, with Change 10
- UFC 3-450-01, Noise and Vibration Control
- UFC 3-501-01, Electrical Engineering
- UFC 3-520-01, Interior Electrical Systems
- UFC 3-530-01, Design: Interior, Exterior Lighting and Controls, with Change 1
- UFC 3-550-01, Exterior Electrical Power Distribution, with Change 1
- UFC 3-560-01, Electrical Safety, O&M, with Change 5
- UFC 3-570-02N, Electrical Engineering Cathodic Protection
- UFC 3-580-01, Telecommunications Building Cabling Systems Planning and Design
- UFC 3-580-10, Navy and Marine Corps Intranet (NMCI) Standard Construction Practices, with Changes 1-3
- UFC 3-600-01, Fire Protection Engineering for Facilities, with Change 3
- UFC 4-010-01, DoD Minimum Antiterrorism Standards for Buildings, with Change 1
- UFC 4-010-02, DoD Minimum Standoff Distances for Buildings

Refer to UFGS 01 33 10.05 20 for additional information regarding applicable UFC documents.

Additional Standards

- NFPA 70

2.2 Sustainable Design

Design and construct project per sustainability requirements identified in Section 01 33 29.05 20, Sustainability Requirements For Design-Build. Additional specific sustainability requirements are found in this document.

2.3 Stormwater Management - Low Impact Development (LID)

Not applicable – project scope does not include any site work.

3.0 SITE ANALYSIS

3.1 Workflow Process

The Contractor shall develop a working schedule in coordination with NAVFAC Mid-Atlantic. The working schedule shall include design of all elements of the project and commissioning. The Contractor shall coordinate his work with on-going base activities.

The Contractor shall be responsible for preparing, submitting and obtaining all permits that may be required by the Commonwealth of Virginia, the local government, SHPO, and other jurisdictional entities for work under this contract.

The Contractor is also responsible for preparing, submitting, and obtaining air pollution control permits, as necessary, with NAVFAC.

The Contractor shall consult with NAVFAC and JNTEXP Little Creek to establish staging and lay-down areas that shall minimize disruption to activities adjacent to the site. Refer to Part 2 of this RFP for details.

4.0 BUILDING REQUIREMENTS

4.1 EXISTING CONDITIONS

Building 3814 is a single story facility that serves as a training facility. The building is approximately 15,000 square feet. The facility has had minor renovations, including the installation of a new air conditioning unit. Direct expansion units provide most of the conditioned air to the building. Unit heaters condition the high bay space. A dedicated outside air unit provides air to the shower and locker rooms. Hot water for the HVAC equipment is generated by a newer gas boiler plant.

The facility is controlled by an Automated Logic DDC. It was found that maintenance is being performed to address emergency situations, rather than as a preventive measure. In addition, the BAS system requires updating.

4.2 PROJECT SCOPE

Retro commissioning

Contractor shall conduct the following corrective actions identified in the scope column of each of the system tables.

The contractor shall, for any hydronic system that is mentioned below, install 4 temperature and 4 pressure gauges and ensure proper communication to the BAS.

Upon completion of corrective actions, the contractor shall then re-commission the affected systems identified in the corrective actions. Contractor shall utilize the Functional Performance Tests which will be provided to successful bidder. Testing shall be conducted on systems identified in the above tables and will test system DDC control components involved with temperature settings, air flow volume, air quality, percent outside air volume, humidity, and all other pertinent parameters. Testing shall emphasize the assessment of individual mechanical component performance and response to DDC commands, as well as how the entire system interactively functions in order to pinpoint operational flaws and the best opportunities for optimization.

Once installation of new equipment and functional performance testing is completed, the contractor shall hire an independent third-party NEBB certified Test & Balance firm to conduct testing and balancing on all air and water side systems that have had work performed on them as part of this contract.

**For all activities, where DDC personnel are required, the contractor shall contact the NAVFAC PWD DDC personnel. The DDC personnel shall be notified 10 business days prior to any activities, where DDC assistance is required. The contractor shall not access, make adjustments or make changes to any DDC related components without prior authorization from the DDC POC.

HVAC

Issue	Tag	Quantity	Existing Condition	Scope
001	AHU-1	4	No filters are installed.	Install new 2”, 24x20 filters.
002	AHU-1	1	Coil is dirty.	Clean coil.
003	AHU-1	1	Unit off on freeze stat.	Verify freeze stat set points to avoid nuisance trips.
004	AHU-1	1	Fan has a loose or broken belt.	Replace belt and adjust fan/motor alignment.
005	AHU-1	1	Unit access is very limited, requires removal of ceiling tiles, lights, grid to access fan motor.	Relocate unit to more accessible area.
006	AHU-2	1	Outside air duct removed and louver blanked off.	Review design intent for heating/cooling and dehumidifying locker room to provide better system application.
007	AHU-2	1	DX cooling condenser unit was turned off at disconnect.	Verify unit operation.
008	DOA-1	1	Unit off on freeze stat.	Verify freeze stat set points to avoid nuisance trips.
009	DOA-1	1	Outside air damper does not fully stroke open. Outside air damper actuator slips on shaft due to damper being bound.	Replace outside air damper.
010	DOA-1	1	AAON outside air temperature sensor mounted on south exterior wall in direct sun light, causing false reading.	Relocate sensor to provide correct ambient temperature readings.
011	DOA-1	1	DX cooling not tested due to OAT of 28F.	Verify unit operation.
012	High Bay EF	2	Units were found off at the HOA switch and are not on the BAS. When energized, the South EF turned on. The North EF did not turn on, but the dampers opened. Units are beyond useful life.	Replace fans and HOA switches. Provide fan start/stop, status and damper control/status on BAS.
013	High Bay UHs	4	There are four steam vertical down blast unit heaters in the high bay, approximately 20 to 25 feet AFF. Units are piped ‘wild’ through the coil with no control valves. Units are beyond useful life.	Replace steam unit heaters with heaters mounted lower on wall(s), either steam or hot water with control valve.
014	High Bay UHs	4	High bay unit heaters have broken line voltage thermostats.	Replace thermostats and integrate into BAS.
015	EF-6	1	Unit found ‘ON’ at the HOA switch, but was not operating.	Replace fractional horse power exhaust fan, motorized damper and room thermostat.

Issue	Tag	Quantity	Existing Condition	Scope
016	EF-7	1	Unit found 'ON' at the HOA switch, but was not operating.	Replace fractional horse power exhaust fan, motorized damper and room thermostat.
017	DOA-1	1	Hot water heating coil is air bound, no water flow.	Flush and purge air from the system.

BAS/EMS Logic Repairs

Issue	Tag	Quantity	Existing Condition	Scope
001	AHU-1	1	Unit did not restart when freeze stat was cleared. Graphics indicated start/stop on, but fan status was off.	Correct controls.
002	AHU-1	1	When fan disconnect was turned off, fan status did not change.	Correct controls.
003	AHU-1	1	Graphic shows motorized OAD but unit did not appear to have one.	Verify unit does not have damper and correct graphics accordingly.
004	AHU-2	1	Freeze stat not shown on graphic or logic.	Correct controls or removed freeze stat, as it is not currently required.
005	DOA-1	1	Freeze stat not shown on graphic or logic.	Correct controls or removed freeze stat, as it is not currently required.
006	DOA-1	1	Heating control valve is controlled based on space temperature, not discharge air temperature.	Modify controls so that heating control valve is controlled to maintain discharge air temperature, as AHU-2 is used to control space temperature set point.
007	Boiler	1	Graphical and programming interface between boiler and BAS not completed.	Complete integration
008	EF-6	1	EF-6 BAS graphics were not complete.	Complete integration.
009	EF-7	1	EF-7 was not on BAS.	Add to the BAS.

5.0 ROOM REQUIREMENTS

Not Used.

6.0 ENGINEERING SYSTEMS REQUIREMENTS (ESR)

B30 Roofing – *(Not Used)*
C10 Interior Construction – *(Not Used)*
C20 Stairs – *(Not Used)*
C30 Interior Finishes
D10 Conveying Systems – *(Not Used)*
D20 Plumbing – *(Not Used)*
D30 HVAC
D40 Fire Protection Systems
D50 Electrical Power and Lighting
E10 Equipment – *(Not Used)*
E20 Furnishings – *(Not Used)*
F10 Special Construction – *(Not Used)*
F20 Selective Building Demo – *(Not Used)*
G10 Site Preparations – *(Not Used)*
G20 Site Improvements – *(Not Used)*
G30 Site Civil/Mechanical Utilities – *(Not Used)*
G40 Site Electrical Utilities

C30 INTERIOR FINISHES

C3010 WALL FINISHES

All interior concrete masonry partitions shall be painted.

Unless noted otherwise, all interior gypsum board wall partitions shall be painted gypsum board.

C3020 FLOOR FINISHES

Not Used.

C3030 CEILING FINISHES

Primary ceiling finish shall be 24 inch by 24 inch by 5/8 inch minimum thickness suspended acoustical panel ceiling system, except provide a suspended gypsum board ceiling in entrance lobby, and restrooms.

Ceiling finish material shall be painted gypsum board.

C3040 INTERIOR COATINGS AND SPECIAL FINISHES

Where any new surfaces are required (i.e., due to cutting/patching for HVAC work), paint to match previously painted interior surfaces. Surfaces requiring painting may include walls, doors, trim, ceilings as well as all interior exposed metal items, to include interior grilles, registers, diffusers, access panels, and panel boxes.

D30 HVAC

HVAC System Requirements

Provide air conditioning and heating for spaces as indicated and for the following Design conditions:

Outside Conditions

Summer	91	Degrees F dry bulb	Winter	21	Degrees F
	76	Degrees F wet bulb			

Inside Conditions

Summer	23.8	Degrees C dry bulb	Winter	20	Degrees C
	75	Degrees F dry bulb		68	Degrees F
	50	%RH			

Heating & Ventilating Inside Conditions

Summer	80	Degrees F dry bulb	Winter	55	Degrees F
	6	Air changes per hour			

Provide Ventilation rates and systems per the latest edition of ASHRAE Standard 62, *Ventilation for Acceptable Indoor Air Quality*.

The HVAC system shall provide each zone with the choice of heating or cooling year round unless otherwise indicated. Each zone shall have its own limited range of control, as allowed by the control system central workstation.

Provide protective coatings on casings and coils which come in contact with outside air.

D3020 HEAT GENERATING SYSTEMS

Equipment Thermal Insulation
Provide Insulation for hot and chilled water pumps and equipment. Provide vapor barrier for chilled water applications.

D3030 COOLING GENERATING SYSTEMS

Chilled Water Systems

Provide connection to and extension of the existing central chilled water system for service to the building HVAC equipment.

D3040 DISTRIBUTION SYSTEMS

Air Distribution, Heating & Cooling

Provide insulated, galvanized steel ductwork. Provide double wall, preinsulated ductwork in public areas when exposed.

D304007 EXHAUST SYSTEMS

Provide ductwork constructed, braced, reinforced, installed, supported, and sealed per the IMC and SMACNA standards.

Provide ducted exhaust ventilation systems and exhaust fans to serve areas identified in Chapter 4.

D3050 TERMINAL & PACKAGE UNITS

Not Used.

D3060 CONTROLS AND INSTRUMENTATION

HVAC Controls

Provide a partial direct digital control (DDC) system which will communicate with the existing DDC system. The existing DDC system was manufactured by Automated Logic.

DDC Control points shall be added to each piece of equipment indicated in Chapter 4 and programmed to be operated and monitored via the existing DDC system.

New or replaced equipment installed by contractor shall have at minimum the following control points

Air handling units

- Supply air temperature
- Return air temperature
- Outside air temperature (can be a global point)
- All post coil temperatures (air temperature after each coil)
- Fan speed or VFD Hrtz
- Fan status

- Filter Differential Pressure (DP)
- Return air CO2 concentrations
- Outside air CO2 (can be a global point)
- Hydronic valve positions
- Outside Air damper position
- Return Air damper position
- Relief Air damper position

Terminal air units

- Damper position
- Zone temperature set point
- Zone temperature
- Zone CO2
- Fan status (if fan present)
- Supply air temperature
- Hydronic valve position

Hydronic HVAC pumps

- Pump status
- VFD speed
- Pump status
- Pump Delta P (Pressure)

Boiler

- Hot water supply temperature(s)
- Hot water return temperature(s)
- Boiler status
- Hot water flow

Exhaust fans

- Status
- Speed or cfm(if applicable)

The installed BAS system shall have the ability to perform trending and data gathering consistent with the demands of the client. New control points will require the use of existing Automated Logic controllers or the installation of new controllers.

D3070 SYSTEMS TESTING AND BALANCING

Provide complete Testing and Balancing (TAB) of all new or modified air and water distribution systems and HVAC equipment. The contractor is responsible for hiring an independent third-party NEBB certified Test & Balance firm to perform independent inspections, testing, re-balancing and verification of the air and water distribution systems.

Systems to be commissioned include, but are not limited to the following systems: HVAC systems, HVAC control systems, hot water systems, DDC systems, and Testing, Adjusting and Balancing.

D40 FIRE PROTECTION SYSTEMS

D4010 FIRE ALARM AND DETECTION SYSTEMS

Maintain the existing associated interlocks and operation of the fire alarm/mass notification system protocol/sequencing for monitoring and control functions associated with the existing equipment. Ensure compliance with UFC and NFPA criteria.

D50 ELECTRICAL

The electrical design shall comply with the design criteria specified in UFC 3-501-01, *Electrical Engineering*, and its referenced documents.

D5010 ELECTRICAL SERVICE & DISTRIBUTION

Provide an insulated equipment grounding conductor in all raceways for systems operating at greater than 50 volts.

Panelboards shall comply with UL 67 and UL 50.

Provide molded case circuit breakers in accordance with UL 489.

Fusible Disconnect Switches: Heavy Duty, Single Throw: UL 98 and NEMA KS 1, Type HD
Nonfusible Disconnect Switches: Heavy Duty, Single Throw: UL 98, Type HD.

Full-Voltage Magnetic Controllers: Full voltage, non-reversing, electrically held.

Combination Magnetic Controller: Fusible disconnecting means, and with auxiliary contacts.

D5020 LIGHTING & BRANCH WIRING

Not Used.

F20 SELECTIVE BUILDING DEMOLITION

F2020 HAZARDOUS COMPONENT ABATEMENT

Prior to the start of the work the ECATTS trained contractor is required to inspect the work area with the designer of record, and government representative to address existing potentially hazardous components as part of the work. The contractor is required to provide a list of hazardous components, locations and quantities that must be addressed as part of the work.

Private Qualified Person (PQP)

The Contractor is required to hire a PQP to ensure compliance with the approved work plans and perform independent inspections, testing and verification of the hazardous components work including: asbestos and lead containing paint.

G40 SITE ELECTRICAL UTILITIES

G4010 ELECTRICAL DISTRIBUTION

The electrical design shall comply with the design criteria specified in UFC 3-501-01, *Electrical Engineering*.

All primary distribution systems must be designed as four wire, multi-grounded systems that are wye connected at the source transformer. A system grounded neutral conductor must be provided throughout the system. Equipment intended to interrupt current at fault levels must have interrupting ratings sufficient for the nominal circuit voltage and the current that is available at the line terminals of the equipment.

Equipment foundation pads must be 200 mm (8 in) thick; pre-cast concrete pads can be used. Ensure a minimum of 3 m (10 ft) clear workspace in front of pad-mounted equipment for hot stick work. Provide bollards in areas where equipment is subject to vehicular damage.

Part 3 Statement of Work / Project Program – Building 3504

Table of Contents

CHAPTERS

1. PROJECT DESCRIPTION

2. PROJECT OBJECTIVES

3. SITE ANALYSIS

4. BUILDING REQUIREMENTS

5. ROOM REQUIREMENTS (Not Used)

6. ENGINEERING SYSTEMS REQUIREMENTS

B30 Roofing
C10 Interior Construction
C20 Stairs
C30 Interior Finishes
D10 Conveying Systems
D20 Plumbing
D30 HVAC
D40 Fire Protection Systems
D50 Electrical Power and Lighting
E10 Equipment
E20 Furnishings
F10 Special Construction
F20 Selective Building Demo
G10 Site Preparations
G20 Site Improvements
G30 Site Civil/Mechanical Utilities
G40 Site Electrical Utilities

All work described in this section is included as part of the OPTION 2 BID Package.

1.0 PROJECT DESCRIPTION

1.1 Overview

A new Industrial Controls System (ICS) infrastructure is currently planned for JNTEXP Little Creek. The ICS will provide a secure network where Direct Digital Control (DDC), Advanced Metering Infrastructure (AMI) and Supervisory Control and Data Acquisition (SCADA) systems will be accessible from a single location by operations staff. (The ICS installation and programming are not part of this contract.)

As part of this projects development, Building 3504 has gone through retro-commissioning for HVAC and DDC systems. This project includes the scope required for the installation of new DDC control points. Additionally, the project includes a number of corrective actions and energy conservation measures (ECMs) which will improve overall facility operations and energy efficiency.

1.2 Project Components

The scope for Building 3504 includes:

- HVAC
  - Repairs/Improvements
  - Additional Control Points
- Hot Water System Repairs
- Chilled Water System Repairs
- Insulation/Piping Repairs
- BAS/EMS Logic Repairs

2.0 PROJECT OBJECTIVES

The overall ICS project is designed to provide a secure network where key utility and building performance data will be accessible from a single location; to provide improvements at Building 3504 to feed into this new secure network; and to provide energy savings.

The portion of the project executed under this contract will provide improvements at buildings to allow them to feed into this new secure network, and provide energy savings. These savings are intended, through Navy funding programs, to establish a payback for the entire project.

2.1 Applicable Codes and Standards

In addition to the codes and standards listed in Part 4, the design and construction shall be in accordance with the latest revision/edition of the DoD Unified Facilities Criteria (UFC). The term "Latest Revision/Edition" is defined as the version as of the project award date.

Unified Federal Criteria (UFC)

- UFC 1-200-01, General Building Requirements, with Change 3
- UFC 1-200-02, High Performance Sustainable Buildings
- FC 1-300-09N, Navy and Marine Corps Design Procedures, with Change 2
- UFC 2-000-05N, Facility Planning for Navy and Marine Corps Shore Installations, (formerly known as P-80)
- UFC 3-400-02, Design: Engineering Weather Data
- UFC 3-400-10N, Mechanical Engineering, with Change 1
- UFC 3-410-02N, Heating, Ventilating, Air Conditioning and Dehumidifying Systems, with Change 2
- UFC 3-410-04N, Industrial Ventilation
- UFC 3-420-01, Plumbing Systems, with Change 10
- UFC 3-450-01, Noise and Vibration Control
- UFC 3-501-01, Electrical Engineering
- UFC 3-520-01, Interior Electrical Systems
- UFC 3-530-01, Design: Interior, Exterior Lighting and Controls, with Change 1
- UFC 3-550-01, Exterior Electrical Power Distribution, with Change 1
- UFC 3-560-01, Electrical Safety, O&M, with Change 5
- UFC 3-570-02N, Electrical Engineering Cathodic Protection
- UFC 3-580-01, Telecommunications Building Cabling Systems Planning and Design
- UFC 3-580-10, Navy and Marine Corps Intranet (NMCI) Standard Construction Practices, with Changes 1-3
- UFC 3-600-01, Fire Protection Engineering for Facilities, with Change 3
- UFC 4-010-01, DoD Minimum Antiterrorism Standards for Buildings, with Change 1
- UFC 4-010-02, DoD Minimum Standoff Distances for Buildings

Refer to UFGS 01 33 10.05 20 for additional information regarding applicable UFC documents.

Additional Standards

- NFPA 70

2.2 Sustainable Design

Design and construct project per sustainability requirements identified in Section 01 33 29.05 20, Sustainability Requirements For Design-Build. Additional specific sustainability requirements are found in this document.

2.3 Stormwater Management - Low Impact Development (LID)

Not applicable – project scope does not include any site work.

3.0 SITE ANALYSIS

3.1 Workflow Process

The Contractor shall develop a working schedule in coordination with NAVFAC Mid-Atlantic. The working schedule shall include design of all elements of the project and commissioning. The Contractor shall coordinate his work with on-going base activities.

The Contractor shall be responsible for preparing, submitting and obtaining all permits that may be required by the Commonwealth of Virginia, the local government, SHPO, and other jurisdictional entities for work under this contract.

The Contractor is also responsible for preparing, submitting, and obtaining air pollution control permits, as necessary, with NAVFAC.

The Contractor shall consult with NAVFAC and JNTEXP Little Creek to establish staging and lay-down areas that shall minimize disruption to activities adjacent to the site. Refer to Part 2 of this RFP for details.

4.0 BUILDING REQUIREMENTS

4.1 EXISTING CONDITIONS

Building 3504 was built in 1955 and is approximately 161,200 square feet. The facility includes a three-story administration building and a Theater. Several upgrades to the facility's HVAC system have been done, including chillers, and split system units. The mechanical cooling for the facility is primarily handled by air cooled chillers. Heating is provided by a steam/hot water heat exchanger. Direct steam from the central plant is provided to the theater. Air handling units, fan coil units, and direct expansion units provide most of the conditioned air to the building. Chilled water and hot water pumps circulate the water required by the HVAC units.

The facility HVAC is controlled by an Automated Logic direct digital control. The lighting in the building consists of 2x4- 2 to 4 lamp diffuser, and parabolic lay-in T8 florescent fixtures. The facility was also illuminated by 1x4-2 lamp T8 surface mount, and 2x2 U-tube, florescent fixtures. There is no motion detector or daylighting control. In addition, incandescent recessed fixtures, CFL wall sconces, and pendant mounted LED lighting were also observed at the facility. Exit fixtures are up to date, however, a number of emergency lights need replacement.

It was found that maintenance is being performed to address emergency situations, rather than as a preventive measure. In addition, the BAS system needs updating, and a number of exhaust fans require replacement.

4.2 PROJECT SCOPE

Contractor shall conduct the following corrective actions identified in the scope column of each of the system tables.

The contractor shall, for any hydronic system that is mentioned below, install 4 temperature and 4 pressure gauges and ensure proper communication to the BAS.

Upon completion of corrective actions, the contractor shall then re-commission the affected systems identified in the corrective actions. Contractor shall utilize the Functional Performance Tests which will be provided to successful bidder.. Testing shall be conducted on systems identified in the above tables and will test system DDC control components involved with temperature settings, air flow volume, air quality, percent outside air volume, humidity, and all other pertinent parameters. Testing shall emphasize the assessment of individual mechanical component performance and response to DDC commands, as well as how the entire system interactively functions in order to pinpoint operational flaws and the best opportunities for optimization.

Once installation of new equipment and functional performance testing is completed, the contractor shall hire an independent third-party NEBB certified Test & Balance firm to conduct testing and balancing on all air and water side systems that have had work performed on them as part of this contract.

**For all activities, where DDC personnel are required, the contractor shall contact the NAVFAC PWD DDC personnel. The DDC personnel shall be notified 10 business days prior to any activities, where DDC assistance is required. The contractor shall not access, make adjustments or make changes to any DDC related components without prior authorization from the DDC POC.

HVAC

Issue	Tag	Quantity	Existing Condition	Scope
001	AHU-187, 188, 189 & 190	4	Units have clogged filters.	Replace filters.
002	AHU-189	1	The CO2 sensor is not functioning properly. The sensor was outputting -500 ppm.	Replace CO2 sensor.
003	AHU-190	1	Both the OA damper and return damper are 100% open and locked. The unit serves a server room.	Close the OA damper to minimum OA position.
004	RTU-310, 311, 329, 343A & 343 AHU-186A	6	No freeze stat is installed on the unit.	Install freeze stat and map to ALC/Alerton.
005	RTU-343	1	The OA damper is locked at 30%. The unit is not able to perform economizer mode or CO2.	Replace OA damper and actuator.
006	AHU-186A	1	OA and RA damper actuators are not responding and linkages are not connected.	Replace actuators and linkage.
007	AHU-186B	1	The belt for AHU-186B is	Replace belt and check

			broken and the fan is not operating with motor running.	alignment.
008	AHU-186C	1	The OA damper is not responding to commands.	Replace actuators and linkage.
009	AHU-17	1	The supply fan pulley is worn out and the wrong belt has been installed.	Replace the motor, fan pulleys and belts.
010	AHU-17	1	The unit does not develop enough static to obtain proper flow to zone 4.	Resheeve fan to provide the required static pressure.
011	AHU-27	1	Evaporator coil is very dirty.	Clean the coil.
012	EF	12	Approximately 12 downblast centrifugal, 0.33 HP are not functioning.	Replace non-functioning exhaust fans.

Chilled Water System

Issue	Tag	Quantity	Existing Condition	Scope
001	CHW valves	4	Chiller lacks isolation valves.	Install isolation valves of chillers and control valve on chiller bypass. (4) 8" valves with actuators

Hot Water System

Issue	Tag	Quantity	Existing Condition	Scope
001	RTU-343A	1	Heating coil or valve might be clogged. The SAT had a very small temperature change.	Clean/flush coil and check valve. Replace if needed.
002	AHU-185	1	Heating valve (1/2”, #DN15) is leaking while traversing. The leak is likely originating from an actuator stem into the valve.	Replace valve.

Insulation/Piping Repairs

Issue	Tag	Quantity	Existing Condition	Scope
001	Theater AHU	40 LF	Approximately 40 ft of 2" insulation is damaged.	Repair insulation of chilled water and steam pipe of Theater HVAC.

BAS/EMS Logic Repairs

Issue	Tag	Quantity	Existing Condition	Scope
001	AHU-187, 188, 189 & 190	4	The OA damper position does not update on the ALC. The OA damper position is correctly displayed on the	Repair the Alerton to ALC communication.

			Alerton system.	
002	AHU-188	1	Max CO2 is 2,999 ppm.	Lower max CO2 to 1,100 ppm.
003	AHU-188,189, 311 & 329	4	S/S fan is not updating on the ALC. The S/S status on Alerton is correct.	Repair the Alerton to ALC communication.
004	AHU-187	1	Max CO2 is 1,900 ppm.	Lower max CO2 to 1,100 ppm.
005	RTU-311	1	Both dampers are locked at 50%. The unit is not able to perform economizer mode or CO2.	Unlock dampers at a mechanical level.
006	Theater AHU	1	The controls for the solar wall are not active or programmed in the Alerton Control System.	Add programming and correct integration with the ALS.
007	Theater AHU	1	The graphics for the solar wall are incorrect.	Correct graphics in the ALS.
008	Theater AHU	1	The CO2 sensor is not working properly.	Replace the CO2 sensor.
009	Theater AHU	1	The economizer logic does not compare the RAT to OAT.	Add logic to compare the RAT to the OAT.
010	Theater AHU	1	The minimum OAD is set to zero.	Adjust the OAD set point to provide the minimum OA.
011	Theater AHU, AHU-17, AHU-27 & RTU-20	4	The economizer is based on dry bulb temperature, not enthalpy.	Revise the logic to operate the economizer based on enthalpy.
012	AHU-17	1	When CO2 level exceeds the set point, the OAD does not open due to outside air temperature lock out.	Reprogram AHU-17 to allow CO2 damper operation.
013	AHU-27	1	The mixed air temperature sensor is not functioning properly.	Replace the sensor.
014	AHU-27	1	The CO2 sensor does not function properly.	Replace the sensor.
015	AHU-27	1	The ALS graphic integration is not working for the economizer. The Alerton graphics change but the ALS graphics do not change.	Correct integration between ALS and Alerton system.
016	CHLR-1 & CHLR-1C	2	There is no ability to adjust chiller demand limit.	Provide control points to enable adjust chiller demand limit via the BAS.
017	AHU-17, 27, 30, 183, 187, 188, 189, 190, 240, 240A, Theater Lobby AHU	11	The BAS does not have a RAT point.	Provide RAT sensor and update graphics.
018	EDH- 1-8	8	There is no discharge air	Provide DAT sensor and

			temperature sensor.	update graphics.
019	RTU-184A, 184B, 185, 186A, 186B, 186C, 310, 311, 329, 343, 343A, V, 173A, A17, B	15	The BAS does not have a RAT point.	Provide RAT sensor and update graphics.
020	RTU-V, 173A, A17, B	4	The BAS does not have a MAT point.	Provide MAT sensor and update graphics.
021	RTU-V, 173A, A17, B	8	The BAS does not have heating valve or cooling valve point on graphics.	Provide cooling and heating valve on graphics.
022	Exhaust Fans	20	Miscellaneous exhaust fans are not on the BAS.	Provide graphic and start/stop, status on BAS.
023	Chiller Pump	2	No start/stop status on the BAS.	Provide start/stop status on the BAS.
024	Electric Door Heater	8	No status or DAT.	Provide status and DAT on the BAS.

5.0 ROOM REQUIREMENTS

Not Used.

6.0 ENGINEERING SYSTEMS REQUIREMENTS (ESR)

B30 Roofing – *(Not Used)*
C10 Interior Construction – *(Not Used)*
C20 Stairs – *(Not Used)*
C30 Interior Finishes
D10 Conveying Systems – *(Not Used)*
D20 Plumbing
D30 HVAC
D40 Fire Protection Systems
D50 Electrical Power and Lighting
E10 Equipment – *(Not Used)*
E20 Furnishings – *(Not Used)*
F10 Special Construction – *(Not Used)*
F20 Selective Building Demo – *(Not Used)*
G10 Site Preparations – *(Not Used)*
G20 Site Improvements – *(Not Used)*
G30 Site Civil/Mechanical Utilities – *(Not Used)*
G40 Site Electrical Utilities

C30 INTERIOR FINISHES

C3010 WALL FINISHES

All interior concrete masonry partitions shall be painted.

Unless noted otherwise, all interior gypsum board wall partitions shall be painted gypsum board.

C3020 FLOOR FINISHES

Not Used.

C3030 CEILING FINISHES

Primary ceiling finish shall be 24 inch by 24 inch by 5/8 inch minimum thickness suspended acoustical panel ceiling system, except provide a suspended gypsum board ceiling in entrance lobby, and restrooms.

Ceiling finish material shall be painted gypsum board.

C3040 INTERIOR COATINGS AND SPECIAL FINISHES

Where any new surfaces are required (i.e., due to cutting/patching for HVAC work), paint to match previously painted interior surfaces. Surfaces requiring painting may include walls, doors, trim, ceilings as well as all interior exposed metal items, to include interior grilles, registers, diffusers, access panels, and panel boxes.

D30 HVAC

HVAC System Requirements

Provide air conditioning and heating for spaces as indicated and for the following Design conditions:

Outside Conditions

Summer	91	Degrees F dry bulb	Winter	21	Degrees F
	76	Degrees F wet bulb			

Inside Conditions

Summer	23.8	Degrees C dry bulb	Winter	20	Degrees C
	75	Degrees F dry bulb		68	Degrees F
	50	%RH			

Heating & Ventilating Inside Conditions

Summer	80	Degrees F dry bulb	Winter	55	Degrees F
	6	Air changes per hour			

Provide Ventilation rates and systems per the latest edition of ASHRAE Standard 62, *Ventilation for Acceptable Indoor Air Quality*.

The HVAC system shall provide each zone with the choice of heating or cooling year round unless otherwise indicated. Each zone shall have its own limited range of control, as allowed by the control system central workstation.

Provide protective coatings on casings and coils which come in contact with outside air.

D3020 HEAT GENERATING SYSTEMS

Equipment Thermal Insulation
Provide Insulation for hot and chilled water pumps and equipment. Provide vapor barrier for chilled water applications.

D3030 COOLING GENERATING SYSTEMS

Chilled Water Systems

Clean air handler coils, replace damaged motors, belts and damper actuators.

D3040 DISTRIBUTION SYSTEMS

Air Distribution, Heating & Cooling

Provide insulated, galvanized steel ductwork. Provide double wall, preinsulated ductwork in public areas when exposed.

Exhaust Fans

Replace non-functioning exhaust fans with new units to match existing.

D3050 TERMINAL & PACKAGE UNITS

Not Used.

D3060 CONTROLS AND INSTRUMENTATION

HVAC Controls

Provide a partial direct digital control (DDC) system which will communicate with the existing DDC system. The existing DDC system was manufactured by Automated Logic.

DDC Control points shall be added to each piece of equipment indicated in Chapter 4 and programmed to be operated and monitored via the existing DDC system.

New or replacement equipment installed by contractor shall have at minimum the following control points

Air handling units

- Supply air temperature
- Return air temperature
- Outside air temperature (can be a global point)
- All post coil temperatures (air temperature after each coil)
- Fan speed or VFD Hrtz
- Fan status
- Filter Differential Pressure (DP)
- Return air CO_2 concentrations
- Outside air CO_2 (can be a global point)
- Hydronic valve positions
- Outside Air damper position

- Return Air damper position
- Relief Air damper position

Terminal air units

- Damper position
- Zone temperature set point
- Zone temperature
- Zone CO2
- Fan status (if fan present)
- Supply air temperature
- Hydronic valve position

Hydronic HVAC pumps

- Pump status
- VFD speed
- Pump status
- Pump Delta P (Pressure)

Boiler

- Hot water supply temperature(s)
- Hot water return temperature(s)
- Boiler status
- Hot water flow

Exhaust fans

- Status
- Speed or cfm(if applicable)

The installed BAS system shall have the ability to perform trending and data gathering consistent with the demands of the client. New control points will require the use of existing Automated Logic controllers or the installation of new controllers.

D3070 SYSTEMS TESTING AND BALANCING

Provide complete Testing and Balancing (TAB) of all new or modified air and water distribution systems and HVAC equipment. The contractor is responsible for hiring an independent third-party NEBB certified Test & Balance firm to perform independent inspections, testing, re-balancing and verification of the air and water distribution systems.

Systems to be commissioned include, but are not limited to the following systems: HVAC systems, HVAC control systems, hot water systems, DDC systems, and Testing, Adjusting and Balancing.

D40 FIRE PROTECTION SYSTEMS

D4010 FIRE ALARM AND DETECTION SYSTEMS

Maintain the existing associated interlocks and operation of the fire alarm/mass notification system protocol/sequencing for monitoring and control functions associated with the existing equipment. Ensure compliance with UFC and NFPA criteria.

D50 ELECTRICAL

The electrical design shall comply with the design criteria specified in UFC 3-501-01, *Electrical Engineering*, and its referenced documents.

D5010 ELECTRICAL SERVICE & DISTRIBUTION

Provide an insulated equipment grounding conductor in all raceways for systems operating at greater than 50 volts.

Panelboards shall comply with UL 67 and UL 50.

Provide molded case circuit breakers in accordance with UL 489.

Fusible Disconnect Switches: Heavy Duty, Single Throw: UL 98 and NEMA KS 1, Type HD
Nonfusible Disconnect Switches: Heavy Duty, Single Throw: UL 98, Type HD.

Full-Voltage Magnetic Controllers: Full voltage, non-reversing, electrically held.

Combination Magnetic Controller: Fusible disconnecting means, and with auxiliary contacts.

D5020 LIGHTING & BRANCH WIRING

Not Used.

F20 SELECTIVE BUILDING DEMOLITION

F2020 HAZARDOUS COMPONENT ABATEMENT

Prior to the start of the work the ECATTS trained contractor is required to inspect the work area with the designer of record, and government representative to address existing potentially hazardous components as part of the work. The contractor is required to provide a list of hazardous components, locations and quantities that must be addressed as part of the work.

Private Qualified Person (PQP)

The Contractor is required to hire a PQP to ensure compliance with the approved work plans and perform independent inspections, testing and verification of the hazardous components work including: asbestos and lead containing paint.

G40 SITE ELECTRICAL UTILITIES

G4010 ELECTRICAL DISTRIBUTION

The electrical design shall comply with the design criteria specified in UFC 3-501-01, *Electrical Engineering*.

All primary distribution systems must be designed as four wire, multi-grounded systems that are wye connected at the source transformer. A system grounded neutral conductor must be provided throughout the system. Equipment intended to interrupt current at fault levels must have interrupting ratings sufficient for the nominal circuit voltage and the current that is available at the line terminals of the equipment.

Equipment foundation pads must be 200 mm (8 in) thick; pre-cast concrete pads can be used. Ensure a minimum of 3 m (10 ft) clear workspace in front of pad-mounted equipment for hot stick work. Provide bollards in areas where equipment is subject to vehicular damage.

Part 3 Statement of Work / Project Program – Building 3603

Table of Contents

CHAPTERS

1. PROJECT DESCRIPTION

2. PROJECT OBJECTIVES

3. SITE ANALYSIS

4. BUILDING REQUIREMENTS

5. ROOM REQUIREMENTS (Not Used)

6. ENGINEERING SYSTEMS REQUIREMENTS

B30 Roofing
C10 Interior Construction
C20 Stairs
C30 Interior Finishes
D10 Conveying Systems
D20 Plumbing
D30 HVAC
D40 Fire Protection Systems
D50 Electrical Power and Lighting
E10 Equipment
E20 Furnishings
F10 Special Construction
F20 Selective Building Demo
G10 Site Preparations
G20 Site Improvements
G30 Site Civil/Mechanical Utilities
G40 Site Electrical Utilities

All work described in this section is included as part of the OPTION 3 BID Package.

1.0 PROJECT DESCRIPTION

1.1 Overview

A new Industrial Controls System (ICS) infrastructure is currently planned for JNTEXP Little Creek. The ICS will provide a secure network where Direct Digital Control (DDC), Advanced Metering Infrastructure (AMI) and Supervisory Control and Data Acquisition (SCADA) systems will be accessible from a single location by operations staff. (The ICS installation and programming are not part of this contract.)

As part of this projects development, Building 3603 has gone through retro-commissioning for HVAC and DDC systems. This project includes the scope required for the installation of new DDC control points. Additionally, the project includes a number of corrective actions and energy conservation measures (ECMs) which will improve overall facility operations and energy efficiency.

1.2 Project Components

The scope for Building 3603 includes:

- HVAC
  - Repairs/Improvements
  - Additional Control Points
- Hot Water System Repairs
- Chilled Water System Repairs
- Chiller Repairs
- Steam System Repairs
- BAS/EMS Logic Repairs

2.0 PROJECT OBJECTIVES

The overall ICS project is designed to provide a secure network where key utility and building performance data will be accessible from a single location; to provide improvements at Building 3603 to feed into this new secure network; and to provide energy savings.

The portion of the project executed under this contract will provide improvements at buildings to allow them to feed into this new secure network, and provide energy savings. These savings are intended, through Navy funding programs, to establish a payback for the entire project.

2.1 Applicable Codes and Standards

In addition to the codes and standards listed in Part 4, the design and construction shall be in accordance with the latest revision/edition of the DoD Unified Facilities Criteria (UFC). The term "Latest Revision/Edition" is defined as the version as of the project award date.

Unified Federal Criteria (UFC)

- UFC 1-200-01, General Building Requirements, with Change 3
- UFC 1-200-02, High Performance Sustainable Buildings
- FC 1-300-09N, Navy and Marine Corps Design Procedures, with Change 2
- UFC 2-000-05N, Facility Planning for Navy and Marine Corps Shore Installations, (formerly known as P-80)
- UFC 3-400-02, Design: Engineering Weather Data
- UFC 3-400-10N, Mechanical Engineering, with Change 1
- UFC 3-410-02N, Heating, Ventilating, Air Conditioning and Dehumidifying Systems, with Change 2
- UFC 3-410-04N, Industrial Ventilation
- UFC 3-420-01, Plumbing Systems, with Change 10
- UFC 3-450-01, Noise and Vibration Control
- UFC 3-501-01, Electrical Engineering
- UFC 3-520-01, Interior Electrical Systems
- UFC 3-530-01, Design: Interior, Exterior Lighting and Controls, with Change 1
- UFC 3-550-01, Exterior Electrical Power Distribution, with Change 1
- UFC 3-560-01, Electrical Safety, O&M, with Change 5
- UFC 3-570-02N, Electrical Engineering Cathodic Protection
- UFC 3-580-01, Telecommunications Building Cabling Systems Planning and Design
- UFC 3-580-10, Navy and Marine Corps Intranet (NMCI) Standard Construction Practices, with Changes 1-3
- UFC 3-600-01, Fire Protection Engineering for Facilities, with Change 3
- UFC 4-010-01, DoD Minimum Antiterrorism Standards for Buildings, with Change 1
- UFC 4-010-02, DoD Minimum Standoff Distances for Buildings

Refer to UFGS 01 33 10.05 20 for additional information regarding applicable UFC documents.

Additional Standards

- NFPA 70

2.2 Sustainable Design

Design and construct project per sustainability requirements identified in Section 01 33 29.05 20, Sustainability Requirements For Design-Build. Additional specific sustainability requirements are found in this document.

2.3 Stormwater Management - Low Impact Development (LID)

Not applicable – project scope does not include any site work.

3.0 SITE ANALYSIS

3.1 Workflow Process

The Contractor shall develop a working schedule in coordination with NAVFAC Mid-Atlantic. The working schedule shall include design of all elements of the project and commissioning. The Contractor shall coordinate his work with on-going base activities.

The Contractor shall be responsible for preparing, submitting and obtaining all permits that may be required by the Commonwealth of Virginia, the local government, SHPO, and other jurisdictional entities for work under this contract.

The Contractor is also responsible for preparing, submitting, and obtaining air pollution control permits, as necessary, with NAVFAC.

The Contractor shall consult with NAVFAC and JNTEXP Little Creek to establish staging and lay-down areas that shall minimize disruption to activities adjacent to the site. Refer to Part 2 of this RFP for details.

4.0 BUILDING REQUIREMENTS

4.1 EXISTING CONDITIONS

Building 3603 is a compound of three three-story residential facilities of approximately 62,100 square feet. The building has had minor renovations including the installation of new thermostats that are not connected to the BAS. The mechanical cooling for the facility is handled by an air cooled chiller. Heating is provided by a steam to hot water heat exchanger. Air handling units and fan coils distribute air throughout the building to maintain comfort level. Chilled water and hot water pumps circulate the water required by the AHUs.

The facility make up air units, exhaust fans, chiller, heat exchanger control valve, and pumps are controlled by an Automated Logic DDC. Lighting in rooms consists of 1x4, diffuser, surface mount fixtures with 2 T8 florescent lamps. Closets use a 1x2, 2 lamp florescent fixture. Hallways use 12' round wall mount, CFL units. Lobby areas use 2x2 lay-in 2 U-tube florescent fixtures, with 6" round CFL units around the outside. Motion sensor controls were observed in closet areas only. Exit and emergency lighting were well placed but some did not light during test condition.

It was found that maintenance is being performed to address emergency situations, rather than as a preventive measure. In addition, the HVAC equipment is in poor condition, the condensate return system is in need of repair, and number of exhaust fans are partially operating.

4.2 PROJECT SCOPE

Contractor shall conduct the following corrective actions identified in the scope column of each of the system tables.

The contractor shall, for any hydronic system that is mentioned below, install 4 temperature and 4 pressure gauges and ensure proper communication to the BAS.

Upon completion of corrective actions, the contractor shall then re-commission the affected systems identified in the corrective actions. Contractor shall utilize the Functional Performance Tests which will be provided to sucessful bidder.. Testing shall be conducted on systems identified in the above tables and will test system DDC control components involved with temperature settings, air flow volume, air quality, percent outside air volume, humidity, and all other pertinent parameters. Testing shall emphasize the assessment of individual mechanical component performance and response to DDC commands, as well as how the entire system interactively functions in order to pinpoint operational flaws and the best opportunities for optimization.

Once installation of new equipment and functional performance testing is completed, the contractor shall hire an independent third-party NEBB certified Test & Balance firm to conduct testing and balancing on all air and water side systems that have had work performed on them as part of this contract.

**For all activities, where DDC personnel are required, the contractor shall contact the NAVFAC PWD DDC personnel. The DDC personnel shall be notified 10 business days prior to any activities, where DDC assistance is required. The contractor shall not access, make adjustments or make changes to any DDC related components without prior authorization from the DDC POC.

HVAC

Issue	Tag	Quantity	Existing Condition	Scope
001	MUAHU-E	1	Cooling coil discharge air temperature sensor reading incorrectly.	Replace sensor.
002	MUAHU-E	1	2” 3-way cooling coil valve leaks.	Replace valve.
003	MUAHU-E	1	Heating coil isolation valves are closed.	Complete corrective work to coil.
004	MUAHU-F	1	Outside air damper linkage broken, OAD does not open.	Repair damper linkage.
005	MUAHU-F	1	2” 3-way cooling coil valve actuator spins on shaft.	Replace valve and actuator.
006	MUAHU-G	1	Unit was found off and under repair. No communications with the BAS.	Complete repairs to unit.

Chilled Water System Repairs

Issue	Existing Condition	Scope
001	Current chiller and associated air cooled condenser and CHWP are past their useful life.	Replace chiller and its associated air cooled condenser and chilled water pumps and install variable flow system.

Hot Water System Repairs

Issue	Existing Condition	Scope
001	Hot water pumps are past their useful life.	Replace hot water pumps and install variable flow system.

Steam System Repairs

Issue	Existing Condition	Scope
001	Condensate pumps and piping from HX to return pit is faulty.	Install new 1/2 hp duplex pump with receiver, 100 feet of 2" piping.
002	Pressure reducing steam station is inefficient.	Install 2 stage pressure reducing steam station capable of 1/3 and 2/3 flow operation.

BAS/EMS Logic Repairs

Issue	Tag	Quantity	Existing Condition	Scope
001	MUAHU-E	1	When heating coil control valve was commanded open, valve remained closed.	Correct controls to accurately display unit status.
002	MUAHU-F	1	Outside air damper indicated on graphic as open, but damper was closed.	Correct controls to accurately display damper position.
003	MUAHU-F	1	When unit is energized and operating, graphics show fan status as off.	Correct controls to accurately display unit status.
004	MUAHU-F	1	Graphics show a 3-way valve on the heating coil. Coil valve is actually a 2-way valve.	Correct control graphics to accurately display valve.
005	MUAHU-F	1	Interlocked exhaust fans remain off when unit is energized. When fan status is changed to on, exhaust fans energize.	Correct controls to accurately display unit status.
006	MUAHU-F	1	When unit is placed in heating mode, heating valve remains closed, mostly likely due to false fan status.	Correct controls to accurately display unit status.

5.0 ROOM REQUIREMENTS

Not Used.

6.0 ENGINEERING SYSTEMS REQUIREMENTS (ESR)

B30 Roofing – *(Not Used)*
C10 Interior Construction – *(Not Used)*
C20 Stairs – *(Not Used)*
C30 Interior Finishes
D10 Conveying Systems – *(Not Used)*
D20 Plumbing – *(Not Used)*
D30 HVAC
D40 Fire Protection Systems
D50 Electrical Power and Lighting
E10 Equipment – *(Not Used)*
E20 Furnishings – *(Not Used)*
F10 Special Construction – *(Not Used)*
F20 Selective Building Demo – *(Not Used)*
G10 Site Preparations – *(Not Used)*
G20 Site Improvements – *(Not Used)*
G30 Site Civil/Mechanical Utilities – *(Not Used)*
G40 Site Electrical Utilities

C30 INTERIOR FINISHES

C3010 WALL FINISHES

All interior concrete masonry partitions shall be painted.

Unless noted otherwise, all interior gypsum board wall partitions shall be painted gypsum board.

C3020 FLOOR FINISHES

Not Used.

C3030 CEILING FINISHES

Primary ceiling finish shall be 24 inch by 24 inch by 5/8 inch minimum thickness suspended acoustical panel ceiling system, except provide a suspended gypsum board ceiling in entrance lobby, and restrooms.

Ceiling finish material shall be painted gypsum board.

C3040 INTERIOR COATINGS AND SPECIAL FINISHES

Where any new surfaces are required (i.e., due to cutting/patching for HVAC work), paint to match previously painted interior surfaces. Surfaces requiring painting may include walls, doors, trim, ceilings as well as all interior exposed metal items, to include interior grilles, registers, diffusers, access panels, and panel boxes.

D30 HVAC

HVAC System Requirements

Provide air conditioning and heating for spaces as indicated and for the following Design conditions:

Outside Conditions

Summer	91	Degrees F dry bulb	Winter	21	Degrees F
	76	Degrees F wet bulb			

Inside Conditions

Summer	23.8	Degrees C dry bulb	Winter	20	Degrees C
	75	Degrees F dry bulb		68	Degrees F
	50	%RH			

Heating & Ventilating Inside Conditions

Summer	80	Degrees F dry bulb	Winter	55	Degrees F
	6	Air changes per hour			

Provide Ventilation rates and systems per the latest edition of ASHRAE Standard 62, *Ventilation for Acceptable Indoor Air Quality*.

The HVAC system shall provide each zone with the choice of heating or cooling year round unless otherwise indicated. Each zone shall have its own limited range of control, as allowed by the control system central workstation.

Provide protective coatings on casings and coils which come in contact with outside air.

D3020 HEAT GENERATING SYSTEMS

Equipment Thermal Insulation
Provide Insulation for hot and chilled water pumps and equipment. Provide vapor barrier for chilled water applications.

D3030 COOLING GENERATING SYSTEMS

Chilled Water Systems

Remove existing air cooled chiller. Install new air cooled chiller and connect to existing chilled water system. New unit sizing to match existing.

Provide connection to and extension of the existing central chilled water system for service to the building HVAC equipment.

D3040 DISTRIBUTION SYSTEMS

Air Distribution, Heating & Cooling

Provide insulated, galvanized steel ductwork. Provide double wall, preinsulated ductwork in public areas when exposed.

Other Distribution Systems
Provide base mounted circulating pumps with VFD drives to operate in conjunction with new pressure sensors

Chilled Water and Hot Water Distribution Systems
Install Variable Frequency Drives (VFDs) on chilled water and hot water pumps identified in Chapter 4. Replace pumps as necessary if not compatible with VFDs. Replace electric motors on all pumps to be equipped with VFDs.

Variable frequency drives shall be located within 20 feet of the pumps.

Factory-assembled variable frequency drive control systems for variable speed control.

All pump VFD's shall be from the same manufacturer. Each VFD shall include motor starter, motor disconnects and controls as required for a complete system.

Units shall be UL-listed and comply with the National Electric Code.

The pump motor shall be NEMA premium efficient TEFC motor, inverter duty, specifically designed and insulated for variable speed pump duty. Provide ceramic bearings and shaft grounding ring to protect motor bearings from variable frequency drive induced currents.

The motor shall have a minimum 1.15 service factor and the service factor beyond shall not be considered available for the load.

Motor and pump shall be statically and dynamically balanced for variable speed operation between 20 percent and 100 percent of full speed.

D3050 TERMINAL & PACKAGE UNITS

Make-up air units

Provide repairs indicated in Chapter 4 to Makeup air units including sensor, valve and coil repair or replacement.

D3060 CONTROLS AND INSTRUMENTATION

HVAC Controls

Provide a partial direct digital control (DDC) system which will communicate with the existing DDC system. The existing DDC system was manufactured by Automated Logic.

DDC Control points shall be added to each piece of equipment indicated in Chapter 4 and programmed to be operated and monitored via the existing DDC system.

New or replacement equipment installed by contractor shall have at minimum the following control points

Air handling units

- Supply air temperature
- Return air temperature
- Outside air temperature (can be a global point)
- All post coil temperatures (air temperature after each coil)
- Fan speed or VFD Hrtz
- Fan status
- Filter Differential Pressure (DP)
- Return air CO2 concentrations
- Outside air CO2 (can be a global point)
- Hydronic valve positions
- Outside Air damper position
- Return Air damper position
- Relief Air damper position

Terminal air units

- Damper position
- Zone temperature set point
- Zone temperature
- Zone CO2
- Fan status (if fan present)
- Supply air temperature
- Hydronic valve position

Hydronic HVAC pumps

- Pump status
- VFD speed
- Pump status
- Pump Delta P (Pressure)

Boiler

- Hot water supply temperature(s)
- Hot water return temperature(s)
- Boiler status

- Hot water flow

Exhaust fans

- Status
- Speed or cfm(if applicable)

The installed BAS system shall have the ability to perform trending and data gathering consistent with the demands of the client. New control points will require the use of existing Automated Logic controllers or the installation of new controllers.

D3070 SYSTEMS TESTING AND BALANCING

Provide complete Testing and Balancing (TAB) of all new or modified air and water distribution systems and HVAC equipment. The contractor is responsible for hiring an independent third-party NEBB certified Test & Balance firm to perform independent inspections, testing, re-balancing and verification of the air and water distribution systems.

Systems to be commissioned include, but are not limited to the following systems: HVAC systems, HVAC control systems, hot water systems, DDC systems, and Testing, Adjusting and Balancing.

D40 FIRE PROTECTION SYSTEMS

D4010 FIRE ALARM AND DETECTION SYSTEMS

Maintain the existing associated interlocks and operation of the fire alarm/mass notification system protocol/sequencing for monitoring and control functions associated with the existing equipment. Ensure compliance with UFC and NFPA criteria.

D50 ELECTRICAL

The electrical design shall comply with the design criteria specified in UFC 3-501-01, *Electrical Engineering*, and its referenced documents.

D5010 ELECTRICAL SERVICE & DISTRIBUTION

Provide an insulated equipment grounding conductor in all raceways for systems operating at greater than 50 volts.

Panelboards shall comply with UL 67 and UL 50.

Provide molded case circuit breakers in accordance with UL 489.

Fusible Disconnect Switches: Heavy Duty, Single Throw: UL 98 and NEMA KS 1, Type HD
Nonfusible Disconnect Switches: Heavy Duty, Single Throw: UL 98, Type HD.

Full-Voltage Magnetic Controllers: Full voltage, non-reversing, electrically held.

Combination Magnetic Controller: Fusible disconnecting means, and with auxiliary contacts.

D5020 LIGHTING & BRANCH WIRING

Not Used.

F20 SELECTIVE BUILDING DEMOLITION

F2020 HAZARDOUS COMPONENT ABATEMENT

Prior to the start of the work the ECATTS trained contractor is required to inspect the work area with the designer of record, and government representative to address existing potentially hazardous components as part of the work. The contractor is required to provide a list of hazardous components, locations and quantities that must be addressed as part of the work.

Private Qualified Person (PQP)

The Contractor is required to hire a PQP to ensure compliance with the approved work plans and perform independent inspections, testing and verification of the hazardous components work including: asbestos and lead containing paint.

G40 SITE ELECTRICAL UTILITIES

G4010 ELECTRICAL DISTRIBUTION

The electrical design shall comply with the design criteria specified in UFC 3-501-01, *Electrical Engineering*.

All primary distribution systems must be designed as four wire, multi-grounded systems that are wye connected at the source transformer. A system grounded neutral conductor must be provided throughout the system. Equipment intended to interrupt current at fault levels must have interrupting ratings sufficient for the nominal circuit voltage and the current that is available at the line terminals of the equipment.

Equipment foundation pads must be 200 mm (8 in) thick; pre-cast concrete pads can be used. Ensure a minimum of 3 m (10 ft) clear workspace in front of pad-mounted equipment for hot stick work. Provide bollards in areas where equipment is subject to vehicular damage.

Part 3 Statement of Work / Project Program – Building 3604

Table of Contents

CHAPTERS

1. PROJECT DESCRIPTION

2. PROJECT OBJECTIVES

3. SITE ANALYSIS

4. BUILDING REQUIREMENTS

5. ROOM REQUIREMENTS (Not Used)

6. ENGINEERING SYSTEMS REQUIREMENTS

B30 Roofing
C10 Interior Construction
C20 Stairs
C30 Interior Finishes
D10 Conveying Systems
D20 Plumbing
D30 HVAC
D40 Fire Protection Systems
D50 Electrical Power and Lighting
E10 Equipment
E20 Furnishings
F10 Special Construction
F20 Selective Building Demo
G10 Site Preparations
G20 Site Improvements
G30 Site Civil/Mechanical Utilities
G40 Site Electrical Utilities

All work described in this section is included as part of the OPTION 3 BID Package.

1.0 PROJECT DESCRIPTION

1.1 Overview

A new Industrial Controls System (ICS) infrastructure is currently planned for JNTEXP Little Creek. The ICS will provide a secure network where Direct Digital Control (DDC), Advanced Metering Infrastructure (AMI) and Supervisory Control and Data Acquisition (SCADA) systems will be accessible from a single location by operations staff. (The ICS installation and programming are not part of this contract.)

As part of this projects development, Building 3604 has gone through retro-commissioning for HVAC and DDC systems. This project includes the scope required for the installation of new DDC control points. Additionally, the project includes a number of corrective actions and energy conservation measures (ECMs) which will improve overall facility operations and energy efficiency.

1.2 Project Components

The scope for Building 3604 includes:

- HVAC
  - Repairs/Improvements
  - Additional Control Points
- Hot Water System Repairs
- Chilled Water System Repairs
- Steam System Repairs
- BAS/EMS Logic Repairs

2.0 PROJECT OBJECTIVES

The overall ICS project is designed to provide a secure network where key utility and building performance data will be accessible from a single location; to provide improvements at Building 3604 to feed into this new secure network; and to provide energy savings.

The portion of the project executed under this contract will provide improvements at buildings to allow them to feed into this new secure network, and provide energy savings. These savings are intended, through Navy funding programs, to establish a payback for the entire project.

2.1 Applicable Codes and Standards

In addition to the codes and standards listed in Part 4, the design and construction shall be in accordance with the latest revision/edition of the DoD Unified Facilities Criteria (UFC). The term "Latest Revision/Edition" is defined as the version as of the project award date.

Unified Federal Criteria (UFC)

- UFC 1-200-01, General Building Requirements, with Change 3
- UFC 1-200-02, High Performance Sustainable Buildings
- FC 1-300-09N, Navy and Marine Corps Design Procedures, with Change 2
- UFC 2-000-05N, Facility Planning for Navy and Marine Corps Shore Installations, (formerly known as P-80)
- UFC 3-400-02, Design: Engineering Weather Data
- UFC 3-400-10N, Mechanical Engineering, with Change 1
- UFC 3-410-02N, Heating, Ventilating, Air Conditioning and Dehumidifying Systems, with Change 2
- UFC 3-410-04N, Industrial Ventilation
- UFC 3-420-01, Plumbing Systems, with Change 10
- UFC 3-450-01, Noise and Vibration Control
- UFC 3-501-01, Electrical Engineering
- UFC 3-520-01, Interior Electrical Systems
- UFC 3-530-01, Design: Interior, Exterior Lighting and Controls, with Change 1
- UFC 3-550-01, Exterior Electrical Power Distribution, with Change 1
- UFC 3-560-01, Electrical Safety, O&M, with Change 5
- UFC 3-570-02N, Electrical Engineering Cathodic Protection
- UFC 3-580-01, Telecommunications Building Cabling Systems Planning and Design
- UFC 3-580-10, Navy and Marine Corps Intranet (NMCI) Standard Construction Practices, with Changes 1-3
- UFC 3-600-01, Fire Protection Engineering for Facilities, with Change 3
- UFC 4-010-01, DoD Minimum Antiterrorism Standards for Buildings, with Change 1
- UFC 4-010-02, DoD Minimum Standoff Distances for Buildings

Refer to UFGS 01 33 10.05 20 for additional information regarding applicable UFC documents.

Additional Standards

- NFPA 70

2.2 Sustainable Design

Design and construct project per sustainability requirements identified in Section 01 33 29.05 20, Sustainability Requirements For Design-Build. Additional specific sustainability requirements are found in this document.

2.3 Stormwater Management - Low Impact Development (LID)

Not applicable – project scope does not include any site work.

3.0 SITE ANALYSIS

3.1 Workflow Process

The Contractor shall develop a working schedule in coordination with NAVFAC Mid-Atlantic. The working schedule shall include design of all elements of the project and commissioning. The Contractor shall coordinate his work with on-going base activities.

The Contractor shall be responsible for preparing, submitting and obtaining all permits that may be required by the Commonwealth of Virginia, the local government, SHPO, and other jurisdictional entities for work under this contract.

The Contractor is also responsible for preparing, submitting, and obtaining air pollution control permits, as necessary, with NAVFAC.

The Contractor shall consult with NAVFAC and JNTEXP Little Creek to establish staging and lay-down areas that shall minimize disruption to activities adjacent to the site. Refer to Part 2 of this RFP for details.

4.0 BUILDING REQUIREMENTS

4.1 EXISTING CONDITIONS

Building 3604 is a compound of three three-story residential facilities of approximately 62,100 square feet. The building has had minor renovations including the installation of new thermostats that are not connected to the BAS. The mechanical cooling for the facility is handled by an air cooled chiller. Heating is provided by a steam to hot water heat exchanger. Air handling units and fan coils distribute air throughout the building to maintain comfort level. Chilled water and hot water pumps circulate the water required by the AHUs.

The facility make up air units, exhaust fans, chiller, heat exchanger control valve, and pumps are controlled by an Automated Logic DDC. Lighting in rooms consists of 1x4, diffuser, surface mount fixtures with 2 T8 florescent lamps. Closets use a 1x2, 2 lamp florescent fixture. Hallways use 12' round wall mount, CFL units. Lobby areas use 2x2 lay-in 2 U-tube florescent fixtures, with 6" round CFL units around the outside. Motion sensor controls were observed in closet areas only. Exit and emergency lighting were well placed but some did not light during test condition.

It was found that maintenance is being performed to address emergency situations, rather than as a preventive measure. In addition, the HVAC equipment is in poor condition, the condensate return system is in need of repair, and a number of exhaust fans are partially operating.

4.2 PROJECT SCOPE

Contractor shall conduct the following corrective actions identified in the scope column of each of the system tables.

The contractor shall, for any hydronic system that is mentioned below, install 4 temperature and 4 pressure gauges and ensure proper communication to the BAS.

Upon completion of corrective actions, the contractor shall then re-commission the affected systems identified in the corrective actions. Contractor shall utilize the Functional Performance Tests from Part 6. Testing shall be conducted on systems identified in the above tables and will test system DDC control components involved with temperature settings, air flow volume, air quality, percent outside air volume, humidity, and all other pertinent parameters. Testing shall emphasize the assessment of individual mechanical component performance and response to DDC commands, as well as how the entire system interactively functions in order to pinpoint operational flaws and the best opportunities for optimization.

Once installation of new equipment and functional performance testing is completed, the contractor shall hire an independent third-party NEBB certified Test & Balance firm to conduct testing and balancing on all air and water side systems that have had work performed on them as part of this contract.

**For all activities, where DDC personnel are required, the contractor shall contact the NAVFAC PWD DDC personnel. The DDC personnel shall be notified 10 business days prior to any activities, where DDC assistance is required. The contractor shall not access, make adjustments or make changes to any DDC related components without prior authorization from the DDC POC.

HVAC

Issue	Tag	Quantity	Existing Condition	Scope
001	RTU-A	1	Compressor fan contacts are bad, causing the compressor to fail on high pressure cut out.	Replace fan contactors.
002	RTU-A	5	When unit is de-energized, exhaust fans continue to operate. Exhaust fans are not interlocked or on the BAS.	Add exhaust fans to BAS and interlocking with operation of RTU.
003	RTU-B	5	When unit is de-energized, exhaust fans continue to operate. Exhaust fans are not interlocked or on the BAS.	Add exhaust fans to BAS and interlocking with operation of RTU.
004	RTU-C	1	Compressor 1 contacts are bad.	Replace contactors.
005	RTU-C	5	When unit is de-energized, exhaust fans continue to operate. Exhaust fans are not interlocked or on the BAS.	Add exhaust fans to BAS and interlocking with operation of RTU.

Chilled Water System Repairs

Issue	Existing Condition	Scope
001	Current chiller and associated air cooled condenser and CHWP are past their useful life.	Replace chiller and its associated air cooled condenser and chilled water pumps and install variable flow system.

Hot Water System Repairs

Issue	Existing Condition	Scope
001	Hot water pumps are past their useful life.	Replace hot water pumps and install variable flow system.

Steam System Repairs

Issue	Existing Condition	Scope
001	Condensate pumps and piping from HX to return pit is faulty.	Install new 1/2 hp duplex pump with receiver, 100 feet of 2" piping.
002	Pressure reducing steam station is inefficient.	Install 2 stage pressure reducing steam station capable of 1/3 and 2/3 flow operation.

BAS/EMS Logic Repairs

Issue	Tag	Quantity	Existing Condition	Scope
001	RTU-A	1	Graphically the freeze stat is shown in the wrong location.	Correct graphics to accurately display freeze stat.
002	RTU-B	1	Unit was observed simultaneously heating and cooling.	Correct control logic.
003	RTU-B	1	Graphically the freeze stat is shown in the wrong location.	Correct graphics to accurately display freeze stat.
004	RTU-C	1	Graphically the freeze stat is shown in the wrong location.	Correct graphics to accurately display freeze stat.

5.0 ROOM REQUIREMENTS

Not Used.

6.0 ENGINEERING SYSTEMS REQUIREMENTS (ESR)

B30 Roofing
C10 Interior Construction – *(Not Used)*
C20 Stairs – *(Not Used)*
C30 Interior Finishes
D10 Conveying Systems – *(Not Used)*
D20 Plumbing
D30 HVAC
D40 Fire Protection Systems
D50 Electrical Power and Lighting
E10 Equipment – *(Not Used)*
E20 Furnishings – *(Not Used)*
F10 Special Construction – *(Not Used)*
F20 Selective Building Demo – *(Not Used)*
G10 Site Preparations – *(Not Used)*
G20 Site Improvements – *(Not Used)*
G30 Site Civil/Mechanical Utilities – *(Not Used)*
G40 Site Electrical Utilities

B30 ROOFING

B3010 ROOF COVERINGS

Provide all new insulation, roof membrane, membrane flashing, sheet metal flashing materials, and accessories and incidental work necessary for a complete, new, watertight modified bitumen roof system installation.

Insulation system above roof deck shall be minimum R-20 where over environmentally interiors, but no less than that required by ASHRAE 90.1, Chapter 5 for project climate zone

B3040 ROOF WARRANTY

Provide a manufacturer no-dollar-limit 20-year watertightness warranty for the total roof system, including flashings, in accordance with referenced requirements of Standard Design-Build Template PTS B30.

Provide minimum two-year contractor warranty against defects in installation workmanship in accordance with referenced requirements of Standard Design-Build Template PTS B30. Contractor warranty shall provide for full removal and replacement of failed or defective workmanship and damaged materials, including sheet metal flashings.

B3050 ROOF SPECIFICATION AND DETAILING

All work, materials, installation and details shall be in accordance with Standard Design-Build Template PTS B30 and comply with all applicable Unified Facilities Guide Specification (UFGS) materials and installation requirements. UFGS's are referenced in PTS B30 and are available at www.ccb.org . Provide for complete rough carpentry, roof insulation, roof covering, sheet metal flashing, and other components necessary to complete the installation.

Utilize the applicable UFGS for development of the roof membrane specification. Edit for application to the specific project and compliance with the RFP. Provide complete rough carpentry, roof insulation, and sheet metal flashing specification sections coordinated and compatible with the membrane specification.

All details shall be in accordance with recommendations and guidelines of the National Roofing Contractors Association (NRCA) Roofing and Waterproofing Manual and Construction Details and as required by the RFP.

The roof system shall comply with the applicable requirements of the International Building Code. Refer to UFC 3-110-03, *Roofing*, and UFC 3-100-10, *Architecture* for additional technical requirements for the roof system to be installed.

B3060 ROOF DESIGNER REQUIREMENTS

Provide materials specification, installation requirements, and system detailing to include all flashings, penetrations, closures, corners, intersections, terminations, transitions, interfaces, joint, and lap conditions to provide for a watertight installation.

The Contractor shall utilize the services of a Registered Roof Consultant (RRC) certified by the Roof Consultants Institute, or a Registered Professional Architect or Professional Engineer either of which is knowledgeable and experienced in roof investigation, inspection, and design and

specializes in roof design and roof consulting services. Consultant shall be thoroughly familiar with the field conditions and prepare the design or provide design review and approval prior to design acceptance by the Contracting Officer. The consultant shall validate in writing familiarity with field conditions and that the design for the project is complete, in accordance with the RFP, and provides for a complete and effective roof system solution and design.

B3070 QUALITY CONTROL PROGRAM

Contractor shall establish a quality control program to assure adherence to the RFP design and construction requirements and to report on the installation quality.

C30 INTERIOR FINISHES

C3010 WALL FINISHES

All interior concrete masonry partitions shall be painted.

Unless noted otherwise, all interior gypsum board wall partitions shall be painted gypsum board.

C3020 FLOOR FINISHES

Not Used.

C3030 CEILING FINISHES

Primary ceiling finish shall be 24 inch by 24 inch by 5/8 inch minimum thickness suspended acoustical panel ceiling system, except provide a suspended gypsum board ceiling in entrance lobby, and restrooms.

Ceiling finish material shall be painted gypsum board.

C3040 INTERIOR COATINGS AND SPECIAL FINISHES

Where any new surfaces are required (i.e., due to cutting/patching for HVAC work), paint to match previously painted interior surfaces. Surfaces requiring painting may include walls, doors, trim, ceilings as well as all interior exposed metal items, to include interior grilles, registers, diffusers, access panels, and panel boxes.

D20 PLUMBING

D2010 PLUMBING FIXTURES

Not Used.

D2020 DOMESTIC WATER EQUIPMENT

Insulation & Identification

Provide insulation on domestic water hot and cold supply and recirculation piping.

D2040 RAIN WATER DRAINAGE

Not Used.

D30 HVAC

HVAC System Requirements

Provide air conditioning and heating for spaces as indicated and for the following Design conditions:

Outside Conditions

Summer	91	Degrees F dry bulb	Winter	21	Degrees F
	76	Degrees F wet bulb			

Inside Conditions

Summer	23.8	Degrees C dry bulb	Winter	20	Degrees C
	75	Degrees F dry bulb		68	Degrees F
	50	%RH			

Heating & Ventilating Inside Conditions

Summer	80	Degrees F dry bulb	Winter	55	Degrees F
	6	Air changes per hour			

Provide Ventilation rates and systems per the latest edition of ASHRAE Standard 62, *Ventilation for Acceptable Indoor Air Quality*.

The HVAC system shall provide each zone with the choice of heating or cooling year round unless otherwise indicated. Each zone shall have its own limited range of control, as allowed by the control system central workstation.

Provide protective coatings on casings and coils which come in contact with outside air.

D3020 HEAT GENERATING SYSTEMS

Equipment Thermal Insulation
Provide Insulation for hot and chilled water pumps and equipment. Provide vapor barrier for chilled water applications.

D3030 COOLING GENERATING SYSTEMS

Chilled Water Systems

Provide connection to and extension of the existing central chilled water system for service to the building HVAC equipment.

Provide heat recovery for reheat.

Direct Expansion Systems
Provide [[air-cooled, split system] [water source] heat pumps] [air cooled condensing units and associated air handling unit] with ducted air distribution. Provide coil coatings Provide with supplemental electric heater

Provide a dedicated air-cooled direct expansion (DX) ductless split system cooling only unit for the space indicated in Chapter 4.

D3040 DISTRIBUTION SYSTEMS

Air Distribution, Heating & Cooling

Provide insulated, galvanized steel ductwork. Provide double wall, preinsulated ductwork in public areas when exposed.

Provide aluminum grilles, registers, and diffusers. Provide filter grilles for return air.

Water Distribution Systems
Provide complete, operable hot and chilled water system to serve the HVAC equipment throughout the facility.

Air Handling Units
Provide central station air handlers. Provide with 50% filters.

Other Distribution Systems
Provide base mounted circulating pumps with VFD drives to operate in conjunction with new pressure sensors

Chilled Water and Hot Water Distribution Systems
Install Variable Frequency Drives (VFDs) on chilled water and hot water pumps identified in Chapter 4. Replace pumps as necessary if not compatible with VFDs. Replace electric motors on all pumps to be equipped with VFDs.

Variable frequency drives shall be located within 20 feet of the pumps.

Factory-assembled variable frequency drive control systems for variable speed control.

All pump VFD's shall be from the same manufacturer. Each VFD shall include motor starter, motor disconnects and controls as required for a complete system.

Units shall be UL-listed and comply with the National Electric Code.

The pump motor shall be NEMA premium efficient TEFC motor, inverter duty, specifically designed and insulated for variable speed pump duty. Provide ceramic bearings and shaft grounding ring to protect motor bearings from variable frequency drive induced currents.

The motor shall have a minimum 1.15 service factor and the service factor beyond shall not be considered available for the load.

Motor and pump shall be statically and dynamically balanced for variable speed operation between 20 percent and 100 percent of full speed.

D3050 TERMINAL & PACKAGE UNITS

Fan Coil Units

Provide horizontal or vertical type fan coils and controls to match existing.

Package units
Provide split-system, air-to-air heat pumps to serve each conditioned zone of the facility.

Provide packaged rooftop heat pump units to condition the facility.

D3060 CONTROLS AND INSTRUMENTATION

HVAC Controls

Provide a partial direct digital control (DDC) system which will communicate with the existing DDC system. The existing DDC system was manufactured by Automated Logic.

DDC Control points shall be added to each piece of equipment and programmed to be operated and monitored via the existing DDC system.

Equipment installed by contractor shall have at minimum the following control points

Air handling units

- Supply air temperature
- Return air temperature
- Outside air temperature (can be a global point)
- All post coil temperatures (air temperature after each coil)
- Fan speed or VFD Hrtz
- Fan status
- Filter Differential Pressure (DP)
- Return air CO2 concentrations
- Outside air CO2 (can be a global point)
- Hydronic valve positions
- Outside Air damper position
- Return Air damper position
- Relief Air damper position

Terminal air units

- Damper position
- Zone temperature set point
- Zone temperature
- Zone CO2
- Fan status (if fan present)
- Supply air temperature
- Hydronic valve position

Hydronic HVAC pumps

- Pump status
- VFD speed
- Pump status
- Pump Delta P (Pressure)

Boiler

- Hot water supply temperature(s)
- Hot water return temperature(s)
- Boiler status
- Hot water flow

Exhaust fans

- Status
- Speed or cfm(if applicable)

The installed BAS system shall have the ability to perform trending and data gathering consistent with the demands of the client. New control points will require the use of existing Automated Logic controllers or the installation of new controllers.

D3070 SYSTEMS TESTING AND BALANCING

Provide complete Testing and Balancing (TAB) of all new or modified air and water distribution systems and HVAC equipment. The contractor is responsible for hiring an independent third-party NEBB certified Test & Balance firm to perform independent inspections, testing, re-balancing and verification of the air and water distribution systems.

Systems to be commissioned include, but are not limited to the following systems: HVAC systems, HVAC control systems, hot water systems, DDC systems, and Testing, Adjusting and Balancing.

D40 FIRE PROTECTION SYSTEMS

D4010 FIRE ALARM AND DETECTION SYSTEMS

Maintain the existing associated interlocks and operation of the fire alarm/mass notification system protocol/sequencing for monitoring and control functions associated with the existing equipment. Ensure compliance with UFC and NFPA criteria.

D50 ELECTRICAL

The electrical design shall comply with the design criteria specified in UFC 3-501-01, *Electrical Engineering*, and its referenced documents.

D5010 ELECTRICAL SERVICE & DISTRIBUTION

Provide an insulated equipment grounding conductor in all raceways for systems operating at greater than 50 volts.

Panelboards shall comply with UL 67 and UL 50.

Provide molded case circuit breakers in accordance with UL 489.

Fusible Disconnect Switches: Heavy Duty, Single Throw: UL 98 and NEMA KS 1, Type HD
Nonfusible Disconnect Switches: Heavy Duty, Single Throw: UL 98, Type HD.

Full-Voltage Magnetic Controllers: Full voltage, non-reversing, electrically held.

Combination Magnetic Controller: Fusible disconnecting means, and with auxiliary contacts.

D5020 LIGHTING & BRANCH WIRING

Not Used.

F20 SELECTIVE BUILDING DEMOLITION

F2020 HAZARDOUS COMPONENT ABATEMENT

Prior to the start of the work the ECATTS trained contractor is required to inspect the work area with the designer of record, and government representative to address existing potentially hazardous components as part of the work. The contractor is required to provide a list of hazardous components, locations and quantities that must be addressed as part of the work.

Private Qualified Person (PQP)

The Contractor is required to hire a PQP to ensure compliance with the approved work plans and perform independent inspections, testing and verification of the hazardous components work including: asbestos and lead containing paint.

G40 SITE ELECTRICAL UTILITIES

G4010 ELECTRICAL DISTRIBUTION

The electrical design shall comply with the design criteria specified in UFC 3-501-01, *Electrical Engineering*.

All primary distribution systems must be designed as four wire, multi-grounded systems that are wye connected at the source transformer. A system grounded neutral conductor must be provided throughout the system. Equipment intended to interrupt current at fault levels must have interrupting ratings sufficient for the nominal circuit voltage and the current that is available at the line terminals of the equipment.

Equipment foundation pads must be 200 mm (8 in) thick; pre-cast concrete pads can be used. Ensure a minimum of 3 m (10 ft) clear workspace in front of pad-mounted equipment for hot stick work. Provide bollards in areas where equipment is subject to vehicular damage.

Part 3 Statement of Work / Project Program – Building 3560

Table of Contents

CHAPTERS

1. PROJECT DESCRIPTION

2. PROJECT OBJECTIVES

3. SITE ANALYSIS

4. BUILDING REQUIREMENTS

5. ROOM REQUIREMENTS (Not Used)

6. ENGINEERING SYSTEMS REQUIREMENTS

B30 Roofing
C10 Interior Construction
C20 Stairs
C30 Interior Finishes
D10 Conveying Systems
D20 Plumbing
D30 HVAC
D40 Fire Protection Systems
D50 Electrical Power and Lighting
E10 Equipment
E20 Furnishings
F10 Special Construction
F20 Selective Building Demo
G10 Site Preparations
G20 Site Improvements
G30 Site Civil/Mechanical Utilities
G40 Site Electrical Utilities

All work described in this section is included as part of the OPTION 4 BID Package.

1.0 PROJECT DESCRIPTION

1.1 Overview

A new Industrial Controls System (ICS) infrastructure is currently planned for JNTEXP Little Creek. The ICS will provide a secure network where Direct Digital Control (DDC), Advanced Metering Infrastructure (AMI) and Supervisory Control and Data Acquisition (SCADA) systems will be accessible from a single location by operations staff. (The ICS installation and programming are not part of this contract.)

As part of this projects development, Building 3560 has gone through retro-commissioning for HVAC and DDC systems. This project includes the scope required for the installation of new DDC control points. Additionally, the project includes a number of corrective actions and energy conservation measures (ECMs) which will improve overall facility operations and energy efficiency.

1.2 Project Components

The scope for Building 3560 includes:

- HVAC
  - Repairs/Improvements
  - Additional Control Points
- Hot Water System Repairs
- Chilled Water System Repairs
- Insulation/Piping Repairs
- BAS/EMS Logic Repairs

2.0 PROJECT OBJECTIVES

The overall ICS project is designed to provide a secure network where key utility and building performance data will be accessible from a single location; to provide improvements at Building 3560 to feed into this new secure network; and to provide energy savings.

The portion of the project executed under this contract will provide improvements at buildings to allow them to feed into this new secure network, and provide energy savings. These savings are intended, through Navy funding programs, to establish a payback for the entire project.

2.1 Applicable Codes and Standards

In addition to the codes and standards listed in Part 4, the design and construction shall be in accordance with the latest revision/edition of the DoD Unified Facilities Criteria (UFC). The term "Latest Revision/Edition" is defined as the version as of the project award date.

Unified Federal Criteria (UFC)

- UFC 1-200-01, General Building Requirements, with Change 3
- UFC 1-200-02, High Performance Sustainable Buildings
- FC 1-300-09N, Navy and Marine Corps Design Procedures, with Change 2
- UFC 2-000-05N, Facility Planning for Navy and Marine Corps Shore Installations, (formerly known as P-80)
- UFC 3-400-02, Design: Engineering Weather Data
- UFC 3-400-10N, Mechanical Engineering, with Change 1
- UFC 3-410-02N, Heating, Ventilating, Air Conditioning and Dehumidifying Systems, with Change 2
- UFC 3-410-04N, Industrial Ventilation
- UFC 3-420-01, Plumbing Systems, with Change 10
- UFC 3-450-01, Noise and Vibration Control
- UFC 3-501-01, Electrical Engineering
- UFC 3-520-01, Interior Electrical Systems
- UFC 3-530-01, Design: Interior, Exterior Lighting and Controls, with Change 1
- UFC 3-550-01, Exterior Electrical Power Distribution, with Change 1
- UFC 3-560-01, Electrical Safety, O&M, with Change 5
- UFC 3-570-02N, Electrical Engineering Cathodic Protection
- UFC 3-580-01, Telecommunications Building Cabling Systems Planning and Design
- UFC 3-580-10, Navy and Marine Corps Intranet (NMCI) Standard Construction Practices, with Changes 1-3
- UFC 3-600-01, Fire Protection Engineering for Facilities, with Change 3
- UFC 4-010-01, DoD Minimum Antiterrorism Standards for Buildings, with Change 1
- UFC 4-010-02, DoD Minimum Standoff Distances for Buildings

Refer to UFGS 01 33 10.05 20 for additional information regarding applicable UFC documents.

Additional Standards

- NFPA 70

2.2 Sustainable Design

Design and construct project per sustainability requirements identified in Section 01 33 29.05 20, Sustainability Requirements For Design-Build. Additional specific sustainability requirements are found in this document.

2.3 Stormwater Management - Low Impact Development (LID)

Not applicable – project scope does not include any site work.

3.0 SITE ANALYSIS

3.1 Workflow Process

The Contractor shall develop a working schedule in coordination with NAVFAC Mid-Atlantic. The working schedule shall include design of all elements of the project and commissioning. The Contractor shall coordinate his work with on-going base activities.

The Contractor shall be responsible for preparing, submitting and obtaining all permits that may be required by the Commonwealth of Virginia, the local government, SHPO, and other jurisdictional entities for work under this contract.

The Contractor is also responsible for preparing, submitting, and obtaining air pollution control permits, as necessary, with NAVFAC.

The Contractor shall consult with NAVFAC and JNTEXP Little Creek to establish staging and lay-down areas that shall minimize disruption to activities adjacent to the site. Refer to Part 2 of this RFP for details.

3.2 Special Design Challenges

Among the special design challenges inherent in this project are the following:

- Some mechanical equipment is accessible only via congested area.

4.0 BUILDING REQUIREMENTS

4.1 EXISTING CONDITIONS

Building 3560 is a single story facility that is used as a bowling alley. The building is approximately 29,900 square feet. The facility is equipped with a 4-pipe system that is connected to modular geothermal heat pumps. Conditioned air is delivered to the spaces via (2) Air Handling Units. Exhaust and relief air is provided by exhaust fans and relief dampers.

Approximately 50% of the facility equipment has pneumatic controls, while the other 50% is being operated by electric/electronic controls.

The air handling unit was equipped with leaking pipes and faulty insulation, and the modular heat pumps have required ample attention. In addition, maintenance is being performed to address emergency situations, rather than as a preventive measure. Humidity and temperature control are issues in the facility, along with improper chilled and hot water flow rates.

4.2 PROJECT SCOPE

Contractor shall conduct the following corrective actions identified in the scope column of each of the system tables.

The contractor shall, for any hydronic system that is mentioned below, install 4 temperature and 4 pressure gauges and ensure proper communication to the BAS.

Upon completion of corrective actions, the contractor shall then re-commission the affected systems identified in the corrective actions. Contractor shall utilize the Functional Performance Tests which will be provided to successful bidder.. Testing shall be conducted on systems identified in the above tables and will test system DDC control components involved with temperature settings, air flow volume, air quality, percent outside air volume, humidity, and all other pertinent parameters. Testing shall emphasize the assessment of individual mechanical component performance and response to DDC commands, as well as how the entire system interactively functions in order to pinpoint operational flaws and the best opportunities for optimization.

Once installation of new equipment and functional performance testing is completed, the contractor shall hire an independent third-party NEBB certified Test & Balance firm to conduct testing and balancing on all air and water side systems that have had work performed on them as part of this contract.

**For all activities, where DDC personnel are required, the contractor shall contact the NAVFAC PWD DDC personnel. The DDC personnel shall be notified 10 business days prior to any activities, where DDC assistance is required. The contractor shall not access, make adjustments or make changes to any DDC related components without prior authorization from the DDC POC.

HVAC

Issue	Tag	Quantity	Existing Condition	Scope
001	AHU-1 & 2	2	Unit is not bringing in outside air to assist cooling or provide ventilation. Controls are set to not economize due to insufficient outside air duct size.	Install new outside air duct (est. 36” x 48” x 10’ run) connecting to existing OA hood/plenum.
002	AHU-1 & 2, WWHP-1		Dehumidification is disabled due to WWHP module #1 (heating module), which requires repairs. The remaining modules (#2 & #3) have been converted into cooling modules to cover the cooling load in the space. This leaves no reheat/dehumidification capabilities. All 3 modules of the water to water heat pump are likely fouled.	Disassemble, clean and reassemble the WWHP.

Chilled Water System

Issue	Tag	Quantity	Existing Condition	Scope

001	AHU-2	1	The 2” chilled water control valve was found with actuator disconnected.	Install new actuator.

BAS/EMS Logic Repairs

Issue	Tag	Quantity	Existing Condition	Scope
001	AHU-1 & 2	2	Both units lack clogged filter indicator or BAS reporting.	Install new pressure gauge with air lines. Connect alarm back to BAS (2 points).
002				Disconnect and remove existing building pneumatic controls as needed for new control system installation. Remove and dispose of old pneumatic controls control panel. Remove and dispose of pneumatic air compressor. Supply and install a direct digital control system for all equipment listed in Section 4.1. Install all control system wiring, replace all room temperature sensors, install all new control valves, damper motors, DDC controllers, etc. and configure for a complete and operable system.

Insulation/Piping Repairs

Issue	Tag	Quantity	Existing Condition	Scope
001	AHU-1 & 2	20LF	Both units lack insulation on CHW Supply and Return piping.	Install new 1.5” insulation on air handler chilled water supply and return piping.

Note: Additional control points required to complete building commissioning will be added before final submission.

5.0 ROOM REQUIREMENTS

Not Used.

6.0 ENGINEERING SYSTEMS REQUIREMENTS (ESR)

B30 Roofing – *(Not Used)*
C10 Interior Construction – *(Not Used)*
C20 Stairs – *(Not Used)*
C30 Interior Finishes
D10 Conveying Systems – *(Not Used)*
D20 Plumbing
D30 HVAC
D40 Fire Protection Systems
D50 Electrical Power and Lighting
E10 Equipment – *(Not Used)*
E20 Furnishings – *(Not Used)*
F10 Special Construction – *(Not Used)*
F20 Selective Building Demo – *(Not Used)*
G10 Site Preparations – *(Not Used)*
G20 Site Improvements – *(Not Used)*
G30 Site Civil/Mechanical Utilities – *(Not Used)*
G40 Site Electrical Utilities

C30 INTERIOR FINISHES

C3010 WALL FINISHES

All interior concrete masonry partitions shall be painted.

Unless noted otherwise, all interior gypsum board wall partitions shall be painted gypsum board.

C3020 FLOOR FINISHES

Not Used.

C3030 CEILING FINISHES

Primary ceiling finish shall be 24 inch by 24 inch by 5/8 inch minimum thickness suspended acoustical panel ceiling system, except provide a suspended gypsum board ceiling in entrance lobby, and restrooms.

Ceiling finish material shall be painted gypsum board.

C3040 INTERIOR COATINGS AND SPECIAL FINISHES

Where any new surfaces are required (i.e., due to cutting/patching for HVAC work), paint to match previously painted interior surfaces. Surfaces requiring painting may include walls, doors, trim, ceilings as well as all interior exposed metal items, to include interior grilles, registers, diffusers, access panels, and panel boxes.

D30 HVAC

HVAC System Requirements

Provide air conditioning and heating for spaces as indicated and for the following Design conditions:

Outside Conditions

Summer	91	Degrees F dry bulb	Winter	21	Degrees F
	76	Degrees F wet bulb			

Inside Conditions

Summer	23.8	Degrees C dry bulb	Winter	20	Degrees C
	75	Degrees F dry bulb		68	Degrees F
	50	%RH			

Heating & Ventilating Inside Conditions

Summer	80	Degrees F dry bulb	Winter	55	Degrees F
	6	Air changes per hour			

Provide Ventilation rates and systems per the latest edition of ASHRAE Standard 62, *Ventilation for Acceptable Indoor Air Quality*.

The HVAC system shall provide each zone with the choice of heating or cooling year round unless otherwise indicated. Each zone shall have its own limited range of control, as allowed by the control system central workstation.

Provide protective coatings on casings and coils which come in contact with outside air.

D3020 HEAT GENERATING SYSTEMS

Equipment Thermal Insulation
Provide Insulation for hot and chilled water pumps and equipment. Provide vapor barrier for chilled water applications.

D3030 COOLING GENERATING SYSTEMS

Chilled Water Systems

Provide connection to and extension of the existing central chilled water system for service to the building HVAC equipment.

Direct Expansion Systems
Provide [[air-cooled, split system] [water source] heat pumps] [air cooled condensing units and associated air handling unit] with ducted air distribution. Provide coil coatings Provide with supplemental electric heater

Provide a dedicated air-cooled direct expansion (DX) ductless split system as indicated in Chapter 4.

D3040 DISTRIBUTION SYSTEMS

Air Distribution, Heating & Cooling

Provide insulated, galvanized steel ductwork. Provide double wall, preinsulated ductwork in public areas when exposed.

D3050 TERMINAL & PACKAGE UNITS

Not Used.

D3060 CONTROLS AND INSTRUMENTATION

HVAC Controls

Provide a partial direct digital control (DDC) system which will communicate with the existing DDC system. The existing DDC system was manufactured by Automated Logic.

DDC Control points shall be added to each piece of equipment indicated in Chapter 4 and programmed to be operated and monitored via the existing DDC system.

New or replacement equipment installed by contractor shall have at minimum the following control points

Air handling units

- Supply air temperature
- Return air temperature
- Outside air temperature (can be a global point)
- All post coil temperatures (air temperature after each coil)
- Fan speed or VFD Hrtz

- Fan status
- Filter Differential Pressure (DP)
- Return air CO2 concentrations
- Outside air CO2 (can be a global point)
- Hydronic valve positions
- Outside Air damper position
- Return Air damper position
- Relief Air damper position

Terminal air units

- Damper position
- Zone temperature set point
- Zone temperature
- Zone CO2
- Fan status (if fan present)
- Supply air temperature
- Hydronic valve position

Hydronic HVAC pumps

- Pump status
- VFD speed
- Pump status
- Pump Delta P (Pressure)

Boiler

- Hot water supply temperature(s)
- Hot water return temperature(s)
- Boiler status
- Hot water flow

Exhaust fans

- Status
- Speed or cfm(if applicable)

The installed BAS system shall have the ability to perform trending and data gathering consistent with the demands of the client. New control points will require the use of existing Automated Logic controllers or the installation of new controllers.

D3070 SYSTEMS TESTING AND BALANCING

Provide complete Testing and Balancing (TAB) of all new or modified air and water distribution systems and HVAC equipment. The contractor is responsible for hiring an independent third-party NEBB certified Test & Balance firm to perform independent inspections, testing, re-balancing and verification of the air and water distribution systems.

Systems to be commissioned include, but are not limited to the following systems: HVAC systems, HVAC control systems, hot water systems, DDC systems, and Testing, Adjusting and Balancing.

D40 FIRE PROTECTION SYSTEMS

D4010 FIRE ALARM AND DETECTION SYSTEMS

Maintain the existing associated interlocks and operation of the fire alarm/mass notification system protocol/sequencing for monitoring and control functions associated with the existing equipment. Ensure compliance with UFC and NFPA criteria.

D50 ELECTRICAL

The electrical design shall comply with the design criteria specified in UFC 3-501-01, *Electrical Engineering*, and its referenced documents.

D5010 ELECTRICAL SERVICE & DISTRIBUTION

Provide an insulated equipment grounding conductor in all raceways for systems operating at greater than 50 volts.

Panelboards shall comply with UL 67 and UL 50.

Provide molded case circuit breakers in accordance with UL 489.

Fusible Disconnect Switches: Heavy Duty, Single Throw: UL 98 and NEMA KS 1, Type HD
Nonfusible Disconnect Switches: Heavy Duty, Single Throw: UL 98, Type HD.

Full-Voltage Magnetic Controllers: Full voltage, non-reversing, electrically held.

Combination Magnetic Controller: Fusible disconnecting means, and with auxiliary contacts.

D5020 LIGHTING & BRANCH WIRING

Not Used.

F20 SELECTIVE BUILDING DEMOLITION

F2020 HAZARDOUS COMPONENT ABATEMENT

Prior to the start of the work the ECATTS trained contractor is required to inspect the work area with the designer of record, and government representative to address existing potentially hazardous components as part of the work. The contractor is required to provide a list of hazardous components, locations and quantities that must be addressed as part of the work.

Private Qualified Person (PQP)

The Contractor is required to hire a PQP to ensure compliance with the approved work plans and perform independent inspections, testing and verification of the hazardous components work including: asbestos and lead containing paint.

G40 SITE ELECTRICAL UTILITIES

G4010 ELECTRICAL DISTRIBUTION

The electrical design shall comply with the design criteria specified in UFC 3-501-01, *Electrical Engineering*.

All primary distribution systems must be designed as four wire, multi-grounded systems that are wye connected at the source transformer. A system grounded neutral conductor must be provided throughout the system. Equipment intended to interrupt current at fault levels must have interrupting ratings sufficient for the nominal circuit voltage and the current that is available at the line terminals of the equipment.

Equipment foundation pads must be 200 mm (8 in) thick; pre-cast concrete pads can be used. Ensure a minimum of 3 m (10 ft) clear workspace in front of pad-mounted equipment for hot stick work. Provide bollards in areas where equipment is subject to vehicular damage.

Part 4 Minimum Materials, Engineering and Construction Requirements

1.0 GENERAL REQUIREMENTS

The requirements indicated here are minimum performance requirements. More specific project functional and performance requirements, scope items and expected quality levels over and above the standards in Part 4 are identified in Part 3 of the Request for Proposal or Basic Ordering Agreement. The Contractor is encouraged to exceed the minimum requirements. The Contractor's performance evaluation will be based in part on enhancements to materials, engineering, design and construction provided for the contract that exceed minimum requirements.

Part 4 is a general section. Not all items in Part 4 will be required for this project. See Part 3 for project-specific requirements. See "Order of Precedence" paragraph in Part 2 for relationships between all parts of the RFP.

In general, unless otherwise indicated, Contractor shall provide all labor, equipment and materials necessary to complete the work required for the contract. All work shall be in conformance with all applicable referenced criteria, construction standards, laws and regulations, including applicable building and fire, life safety codes.

Recycled Materials Considerations:

An Affirmative Procurement Program has been established within the Federal government to promote the purchase of products containing recovered materials. This program promotes the purchase of products containing materials recovered from the solid waste stream. The intent is to conserve resources and reduce solid waste by developing markets for recycled products and encouraging manufacturers to produce quality recycled content products. The contractors shall use products that meet or exceed the EPA guideline standards for recovered content as required by the Federal Acquisition Regulations (FAR). Availability lists of manufacturers and EPA research on product usage are on the Construction Criteria Base (CCB) at http://www.ccb.org under Documents Library, NAVFAC Criteria. A partial list of products containing recycled materials for possible use is as follows:

- Rock Wool Insulation
- Fiberglass Insulation
- Cellulose Insulation
- Structural Fiberboard and Laminated Paperboard
- Cement and Concrete - Coal Fly Ash
- Carpet including backings and cushions
- Floor Tiles
- Reprocessed and Consolidated Latex Paint
- Crushed Concrete Aggregate for new asphalt, concrete or subgrade
- Recycled glass for terrazzo aggregate

- Acoustical Ceiling Tile
- Gypsum Wallboard
- Steel wall studs
- Cellulose spray applied fireproofing
- HDPE Toilet Partitions

1.1 MATERIALS AND METHODS OF CONSTRUCTION

Only new materials and equipment shall be installed in the work. All materials, equipment and appliances shall be of the current manufacturers' products. No obsolete or discontinued materials, equipment and appliances shall be used, except that construction materials containing recycled content as described in Paragraph 1 of this Part that completely comply with all materials specifications found elsewhere in this Part may be used.

1.2 APPLICABLE CODES AND STANDARDS

The design and construction shall be in accordance with established construction practices, and the latest revision/edition of the following referenced codes and standards. The term "Latest Revision/Edition" is defined as the version as of the project award date. References are available at www.wbdg.org/ndbm/ . The advisory provisions of all codes and standards shall be mandatory, as though the word "shall" had been substituted for "should" wherever it appears. Reference to the "authority having jurisdiction" shall be construed to mean "Contracting Officer". Comply with the required and advisory portions of the current edition of the standard at the time of contract award. All work to comply with UFC 1-200-01, *General Building Requirements*, and IBC 2009 or later edition as modified by applicable NFPA Standard as well as codes and standards listed in RFP Part 2 Attachment A.

1.3 LOCATION-SPECIFIC CODES AND STANDARDS

See Part 3.

1.4 DISCREPANCIES

When discrepancies in the referenced standards and the contract requirements occur, the more stringent requirements shall govern. The word "should" in all NFPA publications shall be interpreted as a requirement. The Authority Having Jurisdiction in the interpretation of the codes and standards, and approving the exceptions allowed in the referenced standards, shall be the Contracting Officer, and the parties designated by the Contracting Officer.

2.0 PERFORMANCE TECHNICAL SPECIFICATIONS

Note: The paragraph numbers used correspond with the numbers used in UNIFORMAT II/Work Breakdown Structures (WBS) as listed in the Whole Building Design Guide, Navy Design Build Master, accessible at this website: www.wbdg.org/ndbm .

SECTION A. SUBSTRUCTURE

A10 FOUNDATION

Foundations shall be reinforced concrete slabs-on-grade with continuous strip footings or isolated spread footings. Concrete slabs shall not be less than 4 inches in thickness and footings shall not be less than 18 inches below the lowest adjacent grade. Foundations shall be designed and constructed of reinforced concrete. All design and construction shall comply with IBC and with applicable requirements in Section B Shell. For the purposes of interpreting IBC Chapter 18, the "Owner" and "Building Official" shall mean the "Government", and the "Applicant" shall mean the "Contractor/Designer of Record".

1. **Contractor-Foundation Design**: The Designer of Record shall evaluate the RFP data, and obtain and evaluate all additional data as required to support the design and construction.

2. **Geotechnical Site Data required in Design Drawings**: The Contractor's final design drawings shall include:
   a. Notes identifying the soil allowable bearing capacity used in design.
   b. Subsurface soil information, be it Government provided or Contractor obtained, that represents subsurface conditions existing on the project site (such as boring logs, test pits, laboratory test results and groundwater observations). The locations of all borings shall be indicated on the drawings.

3. **Performance Verification and Acceptance Testing**: Verification of satisfactory construction and system performance shall be via Performance Verification Testing, as detailed in this part of the RFP.
   a. **Earthwork:** Perform quality assurance for earthwork in accordance with IBC Chapter 17. See Section G1030.

SECTION B. SHELL

Building shell may be of any materials and design allowed by applicable codes and standards, subject to specific requirements that may be applicable to a particular activity, such as the base exterior architecture plan (BEAP) and UFC 4-010-01.

B10 SUPERSTRUCTURES

Superstructure work includes structural frames, bearing walls, floors, roofs, roof canopies, and balcony construction. Unless otherwise specified in Part 3, superstructures may be designed and constructed using any materials or combination of different materials allowed by applicable codes and standards. All design and construction shall comply with IBC. Special inspection, testing, approvals, certifications, observations and quality assurance plans as prescribed in Chapter 17 of the IBC are required.

1. **Concrete**: All concrete shall be constructed in accordance with ACI 301. Concrete shall have a 28-day minimum compressive strength of 3,000 psi. Slump shall be between 2 and 4 inches in accordance with ASTM C143. Provide joints as required to minimize cracking. All concrete shall be reinforced. Provide joints as required by applicable ACI standards. Unless otherwise specified in Part 3 or as indicated by the contracting officer, provide steel trowel finish for all exposed floor surfaces.

2. **Masonry**:
   a. All concrete masonry shall be constructed in accordance with ACI 530.1. Concrete masonry shall have a minimum 28-day compressive strength of 1500 psi. Concrete masonry units shall conform to ASTM C90, grade A1. Broken blocks are not allowed. Use only standard size and shape blocks. Block may be cut when necessary. Mortar shall be Type S.
   b. When used, brick shall conform to ASTM C216. In exposed construction, broken brick shall not be allowed. Standard size brick may be cut to fit job condition. Use Type S mortar.
   c. Provide metal anchors for masonry and brick, including veneer construction as required by IBC.

6. **Structural Steel**: Structural steel exposed to weathering shall be adequately protected to prevent corrosion.

7. **Steel deck**: Steel form deck shall have a G90 galvanized finish, and must have a minimum 26-gage thickness. All other steel deck shall have a G90 galvanized finish, and must have a minimum 20-gage thickness.

8. **Cold-formed metal framing**: Cold-formed steel studs, joists and track shall be galvanized with a minimum thickness of 20-gage.

9. **Wood framing**: Wood framing members shall be new lumber, unless otherwise allowed by Part 3. Timber can be Douglas Fir, Douglas Fir-Larch, Hem-Fir, Southern Pine or other structurally competent species allowed by applicable codes and standards. Wood framing shall meet the following minimum grading requirements:
   a. Studs - #3
   b. Joists and rafters- #2
   c. Beams, 4x and larger - #1
   d. Posts, 4x and larger - #1
   e. Blocking - #3
   f. Fascia, trim - #1
   g. Wood Structural Panel Sheathing (Exterior Glue)
   h. Roof - APA rated with span index of 24/0 - minimum thickness 1/2 inch
   i. Walls - APA rated with span index of 32/16 - minimum thickness 1/2 inch
   j. Flooring- APA rated with span index of 48/24 - minimum thickness 3/4 inch

B20 EXTERIOR ENCLOSURE

B2010 EXTERIOR WALLS

1. **Exterior Wall Performance**:
   a. **Vapor Transmission Analysis:** Perform a job specific vapor transmission analysis in accordance with ASHRAE 90.1 or WUFI. The conclusion of the analysis shall indicate the appropriate locations of needed vapor retarders, air barriers, and anticipated dew-point locations in the exterior enclosure during different critical times of the year.
   b. **Maximum Air Infiltration:** The air leak flow rate must not exceed 0.25 CFM at 75 Pa per square foot (0.076 cm 75 Pa per square meter) of building envelope area including roof or ceiling, walls and floor as provided by the DOR.

      Where required in RFP Part 3, provide air barrier testing. Perform testing as described in "U.S. Army Corps of Engineers Air Leakage Test Protocol for Building Envelopes Version 3, May 11, 2012". Repair leaks and repeat testing until prescribed maximum air leak flow rate is achieved. Provide intermediate and final reports.
   c. **Wind Loads:** Provide wind load calculations for exterior cladding in accordance with ASCE-7 with comparative analysis of the cladding system to be provided.
   d. **Water Penetration:** No water penetration shall occur at a pressure of 39 Kg/m2 (8 psf) of fixed area when tested in accordance with ASTM E 331.
   e. **Insulating Value:** Provide complete thermal envelope in accordance with ASHRAE 90.1, Chapter 5 with improvements required to meet project energy goals.

      Where required in RFP Part 3, provide infrared thermal envelope performance testing. Test the building envelope using Infrared Thermography in accordance with the requirements of ASTM C1060 (latest edition) and ISO 6781. The Contracting Officer will witness the testing. Provide thermography test report including thermographs in color and a color temperature scale to define the temperature indicated by the various colors. The report shall identify the high temperature reading, the outdoor air temperature, the building indoor air temperature, and the wind speed and direction. Report to note any areas of compromise in the building envelope, and note all actions required and taken to correct those areas. Repair and repeat testing until discrepancies are demonstrated to be resolved.

2. **Masonry Veneer Exterior Wall Closure Components**: Masonry veneer shall include load bearing and non-load bearing exterior walls of the structure, and shall include colored mortar, special shapes such as sills, headers, trim units and copings of brick masonry, precast concrete, concrete masonry units, or other approved material. Utilize BIA Technical Notes to design, detail, and construct brick masonry walls. Substitute directive language in the place of BIA suggestive language. The results of these wording substitutions change this document to required procedures. The veneer shall be tied to the backup wall system with a system that allows the veneer to move independently of the backup wall system, while being structurally supported. The masonry veneer shall allow for expansion and contraction of the veneer without cracking the exterior material.
   a. **Masonry Veneer Installation:** Conform to ACI 530.1 for masonry veneer installation, including cold weather construction. Antifreeze admixtures are not to be used.
   b. **Mortar:** Provide factory-tinted colored mortar conforming to ASTM C270, unless DOR directs otherwise.

c. **Expansion/Control Joints:** Locate expansion/control joints and seal with proper backing material and ASTM C 920 polyurethane sealant, or preformed foam or rubberized expansion joint closure. Conform to UFC 3-100-10 and BIA Technotes 18, 18A.

d. **Brick:** shall be ASTM C216, Grade SW, type FBS, or type FBX for detail work. ASTM C67 test rating shall be "Not effloresced". Use FBA brick only for special architectural effects requiring a non-uniform size.

e. **Split Faced or Ground Faced Masonry:** ASTM C 90

f. **Cast Stone Trim Units:** Cast Stone shall meet or exceed the requirements of ASTM C 1364.

g. **Wall Cavity:** shall Comply with the and BIA Technical Notes 21A, 21B, 21C, 28B

8. **Through-Wall Flashing Components:** Through-wall flashing with weep holes shall be incorporated in cavity wall construction. Flashing shall be 7 ounce copper flashing with a 3 ounce bituminous coating on each side or a fiberglass fabric bonded on each side of the copper sheet; 16-ounce uncoated copper, 28 gauge Type 302 or 304 stainless steel is also acceptable. 'Flexible membrane flashing, plastic or PVC-based membrane flashing is prohibited.

i. **Reinforcing in Veneer Layer:** Reinforcing in the veneer layer shall be galvanized in accordance with ASTM A 123/A123M, ASTM A153/A153M, or ASTM A653/A653M, Z275 (G90) coating, and be of sufficient size to eliminate damage to the veneer layer from wind and other live and dead loads imposed on the veneer layer.

j. **Masonry Cleaning:** Clean the masonry in accordance with manufacturer's instructions and BIA Technote 20.

3. **Metal Wall Panel Exterior Closure**

Panels shall have factory applied, baked coating to the exterior and interior of metal wall panels and metal accessories. Exterior finish topcoat shall be of 70 percent polyvinylidene fluoride (PVDF) resin with not less than 0.8 mil dry film thickness (DFT). Exterior primer shall be standard with panel manufacturer with not less than 0.8 mil dry film thickness (DFT).

Wall system and attachments shall resist wind loads as determined by ASCE 7, with a factor of safety appropriate for the material holding the anchor. Maximum deflection due to wind on aluminum wall panels shall be 1/60. Maximum deflection due to wind on steel wall panels and girts behind aluminum or steel wall panels shall be limited to 1/120 of their respective spans, except that when interior finishes are used the maximum allowable deflection shall be limited to 1/180 of their respective spans.
Conformations - Non-insulated steel or aluminum wall panels shall have configurations for overlapping adjacent sheets or interlocking ribs for securing adjacent sheets and shall be fastened to framework using concealed fasteners, or choose the option for exposed fasteners when exposed fasteners are acceptable at the installation. Length of sheets shall be sufficient to cover the entire height of any unbroken wall surface.

a. **Steel Wall Panels**:

1) Material and Coating: Form sheets from steel conforming to ASTM A 653/A 653M, Structural Grade 40, galvanized coating conforming to ASTM A 924/A 924M, Class G-90; aluminum-coated steel conforming to SAE AMS 5036; or steel-coated with aluminum-zinc alloy conforming to ASTM A 792/A 792M, except that coating chemical composition shall be approximately 55 percent aluminum, 1.6 percent silicon, and 43.4 percent zinc with minimum coating weight of 0.5 ounce per square foot.

2) Gage: Minimum 22 U.S. Standard Gage for wall panels, but in no case lighter

than required to meet maximum deflection requirements specified.

b. **Aluminum Wall Panels**:

1) Material and Coating - Form sheets of Alloy 3004 or Alclad 3004 conforming to ASTM B 209 having proper temper to suit respective forming operations.

2) Thickness - Minimum 0.81 mm (0.032 inch) nominal, but in no case thinner than that required to meet maximum deflection requirements specified.

c. **Insulated Aluminum or Steel Wall Panels:** Insulated wall panels shall be steel or aluminum factory-fabricated units with insulating core between metal face sheets securely fastened together and uniformly separated with rigid spacers. Panels shall have a factory color finish. Wall panels shall have edge configurations with interlocking ribs for securing adjacent panels. System shall utilize factory fabricated corners and trim pieces at intersections with other materials. Insulated wall panels shall be fastened to framework using concealed fasteners.

1) Insulated Steel Panels - Zinc-coated steel conforming to ASTM A 653/A 653M; or Aluminum-zinc alloy coated steel conforming to ASTM A 792/A 792M, AZ 55 coating. Uncoated wall panels shall be 0.61 mm (0.024 inch) thick minimum.

2) Insulated Aluminum Panels - Alloy conforming to ASTM B209, temper as required for the forming operation, minimum 0.81 mm (0.032 inch) thick.

4. **Stucco Exterior Wall Closure**

a. **Portland Cement Plaster:** ASTM C150, gray Portland cement Type II with 13 mm (1/2 inch) maximum chopped alkali resistant fiberglass strands, minimum 1.5 percent by weight to cement; .68 kg (1 1/2 pounds) per sack of cement. Lime shall conform to ASTM C206, Type S. System shall utilize stainless steel or zinc corner beads, J-beads and other accessories. Unless specifically deleted, the system shall utilize an acrylic admixture or coating to give additional moisture suppression to control fungus growth.

b. **Exterior Insulation and Finish System (EIFS):** EIMA TM 101 and 01 EIMA TM 101.86. EIFS shall be used as the non-primary or the primary exterior finish material only for projects where it is necessary to match existing EIFS.

5. **Precast Concrete Wall Panels**: ACI 211.1 and ACI 301. PCI MNL-116 or PCI MNL-117. Concrete shall have a minimum 28-day compressive strength of 281 Kg/cm2 (4000 psi). Joints shall include properly sized and placed backing material and fully loaded and tooled sealant joint of no less than 1/4 inch sealant material thickness.

6. **Other Wall Finish Systems**

a. **Horizontal Wood Siding:** Horizontal Wood Siding: DOC PS 20, exterior, lap type, 6 inches wide, maximum practicable lengths, 11 mm (7/16 inch) thick, smooth face. All surfaces of wood siding and trim shall be shop coated with an alkyd primer.

Species and Grades 1. Grade 1 Common spruce-pine-fir; NELMA, NLGA, WCLIB, or WWPA. 2. Grade Prime or D finish, pressure-preservative-treated hem-fir; NLGA, WCLIB, or WWPA. 3. Grade D Select (Quality) eastern white pine, eastern hemlock-balsam fir-tamarack, eastern spruce, or white woods; NELMA, NLGA, WCLIB, or WWPA. 4. Grade D Select northern white cedar; NELMA or NLGA. 5. Grade B & B, pressure-preservative-treated southern pine; SPIB.

b. **Vinyl Siding System:** Integrally colored, vinyl siding complying with ASTM D 3679.

c. **Manufactured Faced Panels Systems Exterior Wall Siding:** Glass Fiber Reinforced Cementitious Panels System: Siding made from fiber-cement board that does not contain asbestos fibers; complies with ASTM C 1186, Type A, Grade II; horizontal or vertical pattern in plain or beaded-edge style. Texture: Rough sawn or smooth, factory primed.

7. **Exterior Wall Backup Construction**

a. **Concrete Unit Masonry:** Provide concrete unit masonry to comply with ACI 530.1. Load-bearing units: ASTM C90, Non-load bearing- units: ASTM C129, Type I or II. Provide ground face units, split-faced units, ground-faced units, or split-ribbed units for exposed exterior walls. Provide water repellent admixture to masonry units where the exterior face of the units will not receive a waterproof coating such as paint

b. **Dampproofing:** Dampproof the cavity-facing wythe of the backup masonry using asphaltic primer according to ASTM D 41, if dampproofing is not provided by a sprayed on foam or other DOR-approved membrane insulation system.

8. **Load-Bearing Metal Framing System**

If permitted, provide load-bearing metal framing including top and bottom tracks, bracing, fastenings, and other accessories necessary for complete installation. Framing members shall have the structural properties indicated. Where physical structural properties are not indicated, they shall be as necessary to withstand all imposed loads. Design framing in accordance with AISI SG-673. Installation shall be in accordance with DOR-approved shop drawings and manufacturer's installation instructions.

9. **Exterior Studs**:

Max. Deflection Criteria	Exterior Finish
L/360	Cement Plaster, Wood Veneer, Synthetic Plaster, Metal Panels
L/600	Brick Veneer, Stone Panels

Wall deflections shall be computed on the basis that studs withstand all lateral forces independent of any composite action from sheathing materials. Studs abutting windows or louvers shall also be designed not to exceed 1/4-inch maximum deflection and as required in UFC 4-010-01.1) Studs - ASTM A 1003/ASTM A 1003M, Structural Grade 50, Type H minimum; provide Z180 (G60) galvanized coating in accordance with ASTM A 653/ASTM A 653M. Do not expose studs to direct moisture contact2) Bracing - Provide horizontal bracing in accordance with design calculations and AISI SG-673, consisting of, as a minimum, runner channel cut to fit between and welded to the studs.3) Sheathing - Provide sheathing to withstand structural loads imposed on the wall structure. Cover sheathing with either a 15 pound asphalt-impregnated building paper, or air barrier as required by the wall moisture analysis. Sheathing shall be one of the following: a) Plywood: C-D Grade, Exposure 1; b) Structural-Use and OSB Panels; c) Gypsum: ASTM C 79/C 79M and ASTM C 1177/C 1177M, 13 mm (1/2 inch) thick fire retardant (Type X) 15 mm (5/8 inch) thick; 1.2 meters (4 feet) wide with square edge for supports 400 mm (16 inches) o.c. with or without corner bracing of framing. Gypsum sheathing shall be faced with materials capable of resisting six months of weathering exposure without degradation of the covering or the gypsum. Seal all joints as recommended by the manufacturer.

10. **Wood Framing System**: All materials shall be kiln-dried lumber complying with DOC PS

20. Installation shall be in accordance with AF&PA T11. System shall use preservative pressure treated lumber at sill plates and other members in contact with concrete and masonry surfaces.
    a. **Species and Grades:** Provide species and grades listed: 1) Grade 2 Common spruce-pine-fir; NELMA, NLGA, WCLIB, or WWPA: 2) Grade 2 Common, hem-fir; Douglas-fir; NLGA, WCLIB, or WWPA; 3) Grade 2 Common, southern pine; SPIB.
    b. **Sheathing:** Sheathing shall withstand structural loads imposed on the wall structure. Cover sheathing with either a 15 pound asphalt-impregnated building paper, or air barrier as required by the wall moisture analysis. Sheathing shall be as for Metal Studs.

11. **Cast-in-place Concrete System**: Concrete construction must be in accordance with ACI 301.

12. **Insulation and Vapor Retarder**: Insulation, Vapor Retarders, and Air Barrier Systems in or on Exterior Enclosure shall include: insulation, liquid, sheet or continuous film materials installed separately in or on wall assemblies to provide resistance to heat loss/gain, and vapor penetration.
    a. **Vapor retarder:** Comply with ASTM C755. Incorporate in the exterior wall system where required by vapor transmission calculations or dew point analysis indicates the need or in conditions of high moisture exposure.
    b. **Bituminous Dampproofing:** Bituminous Dampproofing shall be ASTM D449, Type I or Type II bituminous dampproofing on the exterior surface of the interior wythe of masonry in a cavity wall (back-up wall for masonry veneer).
    c. **Building Paper:** FS UU-B-790, Type I, Grade D, Style 1.
    d. **Air Barrier:** Building wrap consisting of air barrier sheeting complying with ASTM E 1677, Type 1, not less than 3 mils thick with a permeance of not less than 575 ng/Pa x s x sq.m. (10 perms). Building wrap shall have a flame spread index of less than 25 in accordance with ASTM E 84. Provide building wrap over sheathing of wood or metal framed construction to reduce air penetration and airborne vapor penetration. Provide building wrap tape as recommended by the manufacturer for sealing all joints in the building wrap. Installation shall be in accordance with manufacturer's instructions. Air barrier installation at windows shall be in accordance with ASTM E 2112.
    e. **Insulation Systems:** Vertical and horizontal polystyrene insulation conforming to ASTM C578 or rigid polyisocyanurate board wall insulating products conforming to ASTM C591 or mineral-fiber blanket insulation conforming to ASTM C 665 shall be provided.

13. **Parapets**: Avoid parapets when possible, but when necessary, provide parapets with the same materials as the exterior wall construction. Provide scuppers and wall edge according to SMACNA.

14. **Exterior Louvers and Screens**: If required, provide louvers for Screened Equipment Enclosure or as louvers for exterior doors.

    Storm shutters shall comply with ASTM E 1996-03.

15. **Balcony Walls and Handrails**: Balcony walls to match exterior construction. Handrails to comply with the IBC and OSHA.

16. **Exterior Soffits**: Exterior soffit system.

17. **Exterior Painting and Special Finishes**; All painting and coating materials shall be low VOC. Painting practices shall comply with applicable federal, state and local laws enacted to insure compliance with Federal Clean Air Standards. Apply coating materials in accordance with SSPC PA 1. SSPC PA 1 methods are applicable to all substrates.

    All paint shall be in accordance with the Master Painters Institute (MPI) standards for the exterior architectural surface being finished. The current MPI, "Approved Product List" which lists paint by brand, label, product name and product code as of the date of contract award, will be used to determine compliance with the submittal requirements of this specification. Provide paint systems tested to "Detailed Performance Level" standard as defined by MPI.

18. **Exterior Joint Sealant**: Sealant joint design, priming, tooling, masking, cleaning and application shall be in accordance with the general requirements of Sealants: A Professionals' Guide from the Sealant, Waterproofing & Restoration Institute (SWRI). All sealant shall conform to ASTM C 920.

19. **Sun Control Devices**: Sun control devices shall be manufactured devices to provide sun control on exterior windows and storefronts. Sun control devices shall be designed and installed to withstand the wind loads prevailing at the project site.

B2020 EXTERIOR WINDOWS

All windows and doors in new or existing buildings, which are subject to Anti-terrorism Standards, must be blast-resistant as prescribed in UFC 4-010-01.

Unless otherwise allowed by Part 3, windows for new facilities shall be aluminum. In building additions or renovations windows shall match existing window materials. Exterior windows design, dimension, and construction shall meet or exceed the requirements for Anti Terrorism Force Protection requirements. In addition, exterior windows shall meet or exceed Energy Star requirements. The design and placement of exterior windows shall take into considerations view, natural light, privacy, and protection for the occupants of the facilities. Provide operable hardware and insect screen for exterior windows. Windows shall be fabricated by manufacturers normally involved in the manufacturing of windows and shall be of the current make and model. No obsolete or discontinued windows shall be used. Provide weather stripping, STC and IIC rating, commensurate with the intended use of the facility. Submit catalog information and manufacturer's specifications for approval by Contracting Officer prior to purchase of windows.

All window assemblies shall meet performance grade CW tested in accordance with AAMA/WDMA/CSA 101/I.S.2/A440-08 or most current edition of this standard.

Where windows separate conditioned spaces from non-conditioned spaces, provide windows bearing NFRC energy label indicating window exceeds current EnergyStar criteria. For storefront or curtainwall systems, provide thermally broken framing and insulating glazing with whole-assembly U-value of 0.40 or less. Provide windows exceeding requirements of ASHRAE 90.1, Table 5.5 for project climate zone.

Windows shall consist of fixed and operable sash used singly and in multiples. Provide operable sash in spaces occupied by people as a minimum. Include operating hardware, non-corroding framed metal screens for operable sash, integrated blinds set between glass panels and security grilles. Provide jamb support for larger windows where recommended by manufacturer.

1. **Metal Windows**: All windows shall conform to ANSI/AAMA/WDMA 101. Metal windows with insulating glass shall have thermally broken frames and sash. Factory finish aluminum windows and provide with aluminum frame screens with aluminum mesh at operable sash, hardware and locks, and tinted glazing. Aluminum screens shall comply with ANSI/SMA 1004.

2. **Wood Windows**: Clad wood and wood windows shall consist of complete units including sash, glass, frame, weatherstripping, insect screen, and hardware. Window units shall meet the requirements of AAMA 101, except maximum air infiltration shall not exceed 0.30 CFM per linear foot of sash crack when tested under uniform static air pressure difference of 7.66 Kg/m2 (1.57 psf).

3. **Storefronts**: Provide one-story storefront system fabricated from formed and extruded aluminum and glass components for exterior use. Utilize the specific section of the Standard Design-Build Performance Technical Specifications Section B202002 for the storefront to be provided. Storefront framing shall meet or exceed the structural requirements, as measured in accordance with ANSI/ASTM E330: Design system to withstand this as a minimum and comply with design pressure established within the required ASCE 7-05 Wind Speed Calculations determined by the overall average opening within the project.

4. **Glazing**: All exterior glazing shall be insulating glass.
   a. Clear Glass - Type I, Class 1 (clear), Quality q4 (A);
   b. Heat-Absorbing Glass - ASTM 1036, Type I, Class 2 Quality q3 (select) ray frames;
   c. Wire Glass - Type II, Class 1, Form 1, Quality q8 Mesh m1 or Form 2, Quality q7;
   d. Laminated Glass - ASTM 1172, total thickness shall be nominally 6 mm (1/4 inch);
   e. Insulating Glass Units - Typically ASTM C 1036, Type I, Class 1, Quality q4, minimum 6 mm;
   f. Tempered Glass - ASTM C 1048, Kind FT (fully tempered);
   g. Patterned Glass - ASTM 1036, Type II, Class 1 (translucent), Form 3 (patterned), Quality q7 (decorative), Finish f1 (patterned one side), Pattern p2 (geometric) 5.55 mm (7/32 inch) thick.

B2030 EXTERIOR DOORS

Exterior doors shall be heavy duty insulated steel doors and frames for service access. Door frames shall have welded corners. Use heavy-duty overhead holder and closer to protect doors from wind damage. Steel shall have G60 galvanized coating in accordance with ASTM A 924/A 924M and ASTM A 653/A 653M when the job site is located within 300 feet from a body of salt water. Provide commercial quality, coating Class A zinc coating in accordance with ASTM A591 for other steel or steel skin hollow metal doors at other locations. Provide kickplates on the inside face of all exterior doors. Weather-protect all exterior doors and related construction with low infiltration weatherstripping and sealants. Provide threshold with offset to stop water penetration while maintaining accessibility compliance. Conform to the design criteria of ASCE 7. See the hardware schedule for door hardware requirements.

Where doors separate conditioned spaces from non-conditioned spaces, provide doors exceeding current EnergyStar criteria. For storefront entrances, provide thermally broken door framing and insulating glazing with whole-assembly U-value of 0.67 or less. Provide doors exceeding requirements of ASHRAE 90.1, Table 5.5 for project climate zone.

1. **Steel Doors**: Exterior doors shall comply with ANSI A250.8-1998 (SDI-100). Hardware preparation shall be in accordance with ANSI A250.6. Doors shall be hung in accordance with ANSI A115.16.
   a. Doors Required:

      1) Standard Duty Doors - Level 1, MSG # 20 (IP 0.032", 0.8 mm), physical performance Level C, Model 1 or 2.

      2) Heavy Duty Doors - MSG # 18 (IP 0,042", 1 mm), physical performance Level B, Model 1 or 2.

      3) Extra Heavy Duty Doors - Level 3, MSG #16, (0.053", 1.3 mm) physical performance Level A, Model 1, 2, or 3.

      4) Maximum Duty Doors - Level 4 (IP 0.067", 1.6 mm), physical performance Level A, Model 1 or 2.

   b. Insulated steel doors and frames are required for entrances to dwelling units, and may also be specified as a Contractor's option to Level 1 standard hollow metal doors. Do not use wood doors for exterior doors, unless they are fully protected from the elements, an exterior grade species, and specially finished. If wood doors are used, provide in accordance with Standard Design-Build Performance Technical Specification Paragraph B203001 2.

2. **Standard Steel Frames**; ANSI A 250.8. Form frames with welded corners for installation in exterior walls. Form stops and beads of 20 gage steel. Frames shall be set in accordance with ASTM A250.11. Anchor all frames with a minimum of three jamb anchors and base steel anchors per frame, zinc-coated or painted with rust-inhibitive paint, not lighter than 18 gage. Mortar infill frames in masonry walls, and infill with gypsum board compound at each jamb anchor in metal frame walls. Only use surface exposed bolted anchors in concrete walls.

3. **Door and Frame Finishes**: a) Exterior Doors, Factory-Primed and Field Painted Finish - Doors and frames shall be factory primed with a rust inhibitive coating as specified in ANSI A250.8. Factory prime doors on six sides of the door; b) Exterior Doors Galvanized Finish -- Shall be Commercial Quality, Coating Class A, zinc coating in accordance with ASTM A 591 when facility is located further than 91 meters (300 feet) from the ocean. When facility is located within 91 meters (300 feet) of the ocean,

provide G60 galvanized coating in accordance with ASTM A 924/A 924M and ASTM A 653/A 653M.

4. **Upward Acting Doors**: Upward acting doors shall be capable of withstanding the design wind loading of ASCE 7. Provide galvanized steel tracks not lighter than 14 gage for 50 mm (2 inch) tracks and not lighter than 12 gage for 75 mm (3 inch) track. Provide a positive locking device and cylinder lock with two keys on manually operated doors.

5. **Overhead and Roll-up Doors**: Large exterior overhead and roll-up doors system shall consist of manual or automatic exterior doors and door assemblies.

6. **Rolling Service Doors and Grilles**: Coiling overhead doors shall have minimum 22 gage thermal insulated slats. Electric operators shall have three-button switches conforming to NEMA MG 1, NEMA ICS 1, and NEMA ICS 2, and auxiliary hand chain operation, weather-stripping and wind-locks. Doors shall be capable of withstanding the design wind loading of ASCE 7 and still operate normally. Finish of the door shall be hot-dipped galvanized with a painted finish.

7. **Sectional Overhead Doors**: Sectional overhead doors shall conform to NAGDM 102, Residential or Commercial or Industrial door standards. If doors are electrically operated, pushbuttons shall be full-guarded to prevent accidental operation, and include limit switches to automatically stop doors at the fully open and closed positions. Limit switch positions shall be readily adjustable.

8. **Hardware**: Provide the services of a Certified Door Hardware Consultant to prepare the door hardware schedule.

   Provide all new hardware with satin chrome finish throughout. Hardware shall be commercial grade, suitable for the operational requirements and in compliance with life safety code and handicapped accessibility requirements, similar in quality to the hardware shown in C1020 Interior Doors and Hardware below.

   Coordination: Provide a master keying system compatible with the existing base system. Provide an emergency access key box for exterior door fireman key access.Coordinate with the local authority and the Contracting Officer to determine the local requirements for hardware, keying and master keying.

B30 ROOFING

For repair of existing roofing, the cutting of the existing roof shall be kept to a minimum and, where necessary, shall be made in a clean and orderly manner to prevent the appearance of a patch.

Repair all damage to existing and new roofing caused by the work of this Contract at no additional cost to the Government. The work shall be executed in such a manner as to maintain the integrity of the existing roofing manufacturer's warranty.

1. **Pre-Roofing Conference**: Prior to beginning roofing work, the Contractor shall hold a Pre-Roofing Conference with the personnel directly responsible for the roofing systems work, as well as the roofing manufacturer's technical representative.

2. **Roof Design Assurance**: If the roofing project is significant (Significant Roof - A single or group of buildings greater than 1,400 m^2 (15,000 sf)), or where extenuating circumstances of the roof project such as building use, content, safety, or visibility require a roofing consultant, the Contractor shall utilize the services of a Registered Roof Consultant (RRC) certified by the Roof Consultant Institute, or a Registered Professional architect or Engineer who specializes in roofing, to approve the roof design. The roof consultant must be engaged in roofing design and roofing construction as his primary endeavor. The roof consultant shall verify in writing that the design for the project is in accordance with the current edition of *NRCA Roofing and Waterproofing Manual*, UFC's, and RFP, and standard industry practices and building codes.

   If a Roof Design Assurance Consultant is needed, consider using a Registered Roof Observer as a QC specialist.

B3010 ROOF COVERINGS

Roof coverings and procedures shall comply with the requirements of UFC 3-110-03, *Roofing*, and NRCA, *Roofing and Waterproofing Manual*found at http://www.nrca.net/rp/technical/manual/manual.aspx as the primary NAVFAC roofing criteria. Roof selection shall comply with UFC 3-330-02A, *Design: Commentary on Roof Systems*. Determine wind uplift using wind speed in accordance with ASCE-7.

1. **STEEP SLOPE ROOF SYSTEMS**: Steep slope systems shall be roofs with a pitch greater than 3 in 12. Steep Slope Systems are slate roofing, Asphalt Shingles, Roof Tiles, Foam Set Tiles, Metal Roof Panels (Architectural Standing Seam Metal Roofs on supported substrate), and Structural Standing Seam Metal Roof (SSSMR). Asphalt shingles can only be used for residential construction and light commercial construction.

2. **LOW SLOPE ROOF SYSTEMS**: Low slope systems shall be roofs with a pitch 3 in 12 or less. Low slope roofing systems shall be built-up asphalt roofing (aggregate surfaced, with modified bituminous components), modified bituminous membrane roofing of a minimum of 3 plies with aggregate surface or granular surface modified bitumen cap sheet, or structural standing seam metal roofing. Use epdm systems only to match existing construction.

3. **ROOF COMPONENTS**:
   a. **Insulation:** For existing structures, provide insulation in accordance with ASHRAE 90.1. For new construction, provide R-30 insulation in the ceilings, attic spaces and soffit areas for interior spaces. Injected polyurethane and Urea

Formaldehyde Foam field applied shall not be used. Provide acoustical insulation above walls separating bathroom/restrooms and corridor and adjacent occupied spaces, and between offices and corridors. Insulation shall have a minimum sound attenuation rating of STC-55.

Insulation shall be Polyisocyanurate Rigid Board Insulation , Mineral Fiber Blanket Insulation to conform to ASTM C 991, with Glass Mat Gypsum Roof Board for use above the deck or insulation conforming to ASTM C 1177/C 1177M, where necessary.

Only on portions of the roof where the sloping of structure does not allow the minimum slopes, provide a factory tapered roof insulation system to provide positive drainage of roof system, and to include drainage around curbs, penetrations, and projections through the roof plane.

Provide Glass Mat Protection Board meeting ASTM C 1177 for use as a thermal barrier (underlayment) or protection board for hot-mopped applications.

b. **Vapor Retarder:**-Determine the need and location in the roof assembly for a vapor retarder. Where the mean January temperature is 40 degrees Fahrenheit or less, and the expected interior relative humidity is 45% or greater, use a vapor retarder. Otherwise, use ASHRAE 90.1 for the determination.

1) Vapor Retarders as Integral Facing - Alloy conforming to ASTM B 209, or Vapor Retarders Separate from Insulation - Vapor retarder material shall be 10 mil polyethylene sheeting conforming to ASTM D 4397.

2) A slip sheet is required to separate the roofing panels from the insulation facing where the facing would be in direct contact with the roofing panels. If a slip sheet is necessary for use with a vapor retarder, use a 5 lb. per 100 square feet rosin-sized, unsaturated building paper.

c. **EPDM Rubber Boots:** Flashing devices around pipe penetrations shall be flexible, one-piece devices molded from weather-resistant EPDM rubber.

d. **Prefabricated Curbs and Equipment Support:** Provide Prefabricated curbs and equipment supports shall be of structural quality, hot-dipped galvanized or galvanized sheet steel, factory primed and prepared for painting with mitered and welded joints. Integral base plates and water diverter crickets shall be provided. Minimum height of curb shall be 8 inches above finish roof.

e. **Fasteners:** Shall meet all requirements of the NRCA and Factory Mutual

f. **Wood Nailers:** Wood nailers shall be pressure-preservative-treated in accordance with AWPA M2 Standards, permanently marked or branded, and installed flush with the top of the adjacent insulation board.

g. **Flashing and Sheet Metal:** Provide flashing and sheet metal work including scuppers, splash pans, and sheet metal roofing. Flashing and sheet metal shall be provided in accordance with roof manufacturer's printed installation instructions and in compliance with NRCA and SMACNA recommendations. Fabricate Flashing and sheet metal components from Copper, Lead-Coated Copper sheet, Steel Sheet, Zinc-Coated (Galvanized) - ASTM A 653/ A 653M, Stainless Steel - ASTM A 167, Type 302 or 304, 2D finish, or Pre-Finished Aluminum.

h. **Gutters and Downspouts:** Provide gutters and downspouts compatible with roofing material and finish. Concealed (interior) gutters and downspouts are prohibited. Provide splash guards at points of discharge.

i. **Roof Openings and Supports:** Provide flashings for roof openings and supports as recommended by the NRCA. Assure all penetration flashings extend minimum 200 mm (8 inches) above the finished roof surface.

j. **Roof Hatches:** Provide roof hatch where required by OSHA, and as access to

roof when roof mounted equipment is used or other routine roof maintenance is required.

k. **Glazed Roof Openings:** Skylights and other glazed roof openings shall be used only to supplement interior lighting levels (generally in steep slope or vertical applications), and otherwise, are discouraged from use.

l. **Guards:** Provide rails or guards as required by the OSHA, the International Building Code or other applicable safety standards.

m. **Traffic Pads:** Provide on roof system to protect roof from foot traffic. Provide traffic pads around roof mounted mechanical equipment and underneath removable mechanical equipment access panels. Traffic pads shall be of compatible material to roof.

4. **OTHER ROOFING**

a. **Lightning Protection:** Lightning protection component penetrations and attachments shall be sealed and flashed and anchored in a permanent manner and in a manner to avoid the degradation of the watertight integrity of the roof system.

b. **Roof Drains (Existing):** Where existing roof drains are to be reused in roof replacement construction, the contractor shall provide new, compatible flashing materials, a new drain clamping ring and new bolts for anchorage. Reuse of existing clamping ring and bolts is unacceptable.

SECTION C. INTERIORS

C10 INTERIOR CONSTRUCTION

C1010 PARTITIONS

1. **Fixed Partitions**: wood frame; light gage steel frame; concrete masonry complying with ACI 530.1/ASCE 6/TMS 602 and associated ASTM Standards; or cast-in-place concrete complying with UFC 1-200-01, ACI 117 and ACI 301/301M. In addition, interior partitions shall comply with tables for sound isolation and noise reduction in Chapter 1, "Architectural Graphic Standards". Include a statement of adherence to the applicable criteria.

   Gypsum board/stud partitions may be standard gypsum board, moisture resistant, or impact resistant. Use cement board in showers and other wet areas. Reinforce points where doorknobs can strike a wall and anchorage points for wall mounted equipment.

2. **Demountable or Removable Partitions**: shall be of materials allowed by code and shall be anchored firmly to the structure to carry their own weight as well as impact forces and seismic lateral forces. Sound Transmission Class (STC) rating and Impact Isolation Class (IIC) rating shall be in accordance with ASTM E 90 or ASTM E 413 for frequency data, and shall meet the requirements of the intended use in Part 3.

3. **Glazed Partitions and Interior Windows**: shall be of the materials allowed by code IBC, and shall comply with fire and smoke separation requirements. Provide safety glazing and fire resistant rating where they are required.

C1020 INTERIOR DOORS

1. **Wood Doors**: Stile and rail wood doors shall be WDMA I.S.6A-01, premium or custom grade, heavy duty or extra heavy duty. Flush wood doors shall be WDMA I.S.1A-04, premium or custom grade, heavy duty or extra heavy duty; or WDMA I.S.-97 (PC-5 5-ply particleboard core or SCLC-5 5-ply structural composite lumber core). Doors adjacent to paneling or millwork shall comply with corresponding AWI millwork grade. Provide interior fire doors.

2. **Steel doors**: shall be ANSI A 250.8, Level 1, (occasional use, low abuse types such as closet doors without locks); Level 2, (low use, moderate abuse types such as office/storeroom doors); Level 3, (moderate use, high abuse types such as BEQ sleeping room doors); Level 4, (high use, high abuse types such as corridors, stairways, assembly spaces, and main entry doors), with a physical performance level of 'A'. Maximum door undercut shall not exceed 19 mm (3/4 inch).

3. **Sound Insulated Doors and Frames**: Utilize Sound Insulated Doors and Frames with sound control weatherstripping in rooms requiring wall assemblies to be sound insulated with a Sound Transmission Class (STC) rating as required. The STC rating for the door and frame assembly shall be not less than the wall assembly STC rating.

4. **Aluminum Doors and Frames**: Provide swing-type aluminum doors and frames

complete with framing members, transoms, side-lites, and accessories. Fabricate of ASTM B 221, Alloy 6063-TS for extrusions.

5. **Steel Door Frames**: ANSI A 250.8. Form frames with welded corners for installation in masonry partitions and knock-down field assembled corners for installation in metal stud and GWB partitions. Frames shall be set in accordance with SDI 105. Form stops and beads with 20 gauge steel.

   Provide a minimum of three jamb anchors and base steel anchors per frame, zinc-coated or painted with rust-inhibitive paint, not lighter the 18 gauge. Secure frames to previously installed concrete or masonry with expansion bolts in accordance with SDI 11-F. Provide mortar infill of frames in masonry walls, and gypsum board compound infill at each jamb anchor in metal frame walls.

6. **Fire doors**: Provide in conformance with NFPA 80 an NFPA 105. Fire doors and frames shall bear the label of UL, FM or WHI attesting to the rating required. Door and frame assemblies shall be tested for conformance per NFPA 252 or UL 10B (for neutral pressure) or UL 10C (for positive pressure). Wood fire doors shall also comply with ASTM E 152.

   Provide stainless steel astragals complying with NFPA 80 for fire-rated assemblies and NFPA 105 for smoke control assemblies.

7. **Interior Door Hardware**: Provide the services of a certified door hardware consultant to prepare the door hardware schedule. Unless otherwise noted, interior doors shall include latch, hinges, door stops and door silencers. Provide closers and kick plates for fire-rated, corridor, stairway and high-use non-residential doors.
   a. **Hinges** - BHMA A156.1, Grade 1, 108 x 108 mm (4 1/2 x 4 1/2 inches) with non-removable pin or anti-friction bearing hinges.
   b. **Locks and Latches** - For non-residential buildings use Series 1000, Operational Grade 1, Security Grade 2 for stairways, building entrances, corridors, assembly spaces, and other high use interior doors. Use Series 4000, Grade 1 for non-residential locations not using Series 1000 hardware. For residential buildings use Series 4000, Grade 2 for interior doors. a) Mortise Locks and Latches - BHMA A 156.13, Series 1000, Operation Grade 1, Security Grade 2. b) Bored Locks and Latches - BHMA A 156.2, Series 4000, Grade 1, or Grade 2.
   c. **Exit Devices** - BHMA A 156.3, Grade 1. Touch bars shall be provided in lieu of conventional crossbars and arms. Use manufacturer's integral touch bars in aluminum storefront doors.
   d. **Card Key Access** - Provide card key type access units for specialized entries. Provide lithium battery powered, magnetic stripe keycard locksets that are ANSI/BHMA A156.13, Series 1000, Grade 1, mortise or ANSI/BHMA A156.2, Series 4000, Grade 1, cylindrical locks, tamper resistant, UL listed with 25 mm (1 inch) throw deadbolt, 19 mm (3/4-inch) throw latch bolt, auxiliary dead-locking latch, and 68.75 mm (2-3/4 inch) backset.

      Provide hardware keying compatible with the existing base-wide keying system. Replacement interchangeable cores shall be compatible with the Best Lock system.
   e. **Key Cabinet**: Provide a Key Cabinet with 30% over capacity.

C1030 SPECIALTIES

1. **Compartments, Cubicles, & Toilet Partitions**: FS A-A-60003. Provide toilet compartments at multi-fixture toilet rooms of Type I, Style B-Ceiling Hung, C-Overhead Braced, or F-Overhead braced-alcove. Reinforce panels to receive partition-mounted accessories. Urinal screens shall be FS A-A-60003. Type III, Style A, floor supported and wall hung or Style D, wall hung. Wall hung urinal screens shall be secured with continuous flanges to urinal screen and wall. Steel and Plastic toilet partitions shall have a recovered materials content of 20 to 30 percent. Chrome-plated or stainless steel door latches and coat hooks. Provide one coat hook per compartment door. Latches and hinges for handicapped compartments shall comply with UFAS & ADAAG.

2. **Toilet and Bath Accessories**: Provide toilet and bath accessories and install per ADAAG and manufacturers' requirements.

3. **Marker Boards and Tack Boards**: Provide porcelain enamel marker boards fused to a nominal 28 gauge steel sheet and tack boards of cork, with a tensile strength of at least 40 psi when tested according to ASTM F 152, with woven or vinyl covering.

4. **Identifying Devices**: All interior doors shall have an identifying device. All handicap accessible facilities shall utilize signage which meets current ADAAG requirements with regard to Braille, raised characters, finishes (contrast), size and mounting height. If room names are subject to frequent change, provide an interchangeable strip to be utilized to facilitate removal and replacement.

5. **Lockers**: Provide lockers to meet FS AA-L-00486 (Rev J), enameled steel with special bases.

6. **Shelving**: Provide steel shelving.

7. **Counters**: Provide solid plastic or plastic laminate counter tops and back splashes, AWI Custom grade.

8. **Cabinets**: Provide cabinetry and millwork items with associated accessories and hardware. Cabinetry shall be AWI premium or custom grade and have concealed hinges with adjustable standards for shelves.

9. **Casework**: Provide all built-in premanufactured metal cabinetry for specialized functions such as laboratories, libraries, medical and dental facilities. Casework shall comply with Mil Std 1691.

10. **Closets**: Provide premanufactured or millwork closets or prefabricated coat closets

11. **Fire Extinguisher Cabinets**: Provide fire extinguisher cabinets. Size and locate fire extinguisher cabinets to encase extinguisher as required by NFPA 10 & 101. Fire extinguishers will be provided by the Customer.

12. **Firestopping Penetrations**: Provide all sleeves, caulking, and flashing for firestopping penetrations.

13. **Entrance Floor Grilles and Mats**: Provide recessed pan or surface floor mats at main only or all building entrances.

14. **Ornamental Metal Work**: Provide ornamental metalwork

15. **Other Interior Specialties**: Motorized projection screen shall be wall or ceiling or above-ceiling mounting. Pull-down projection screens shall be provided in lieu of motorized projection screens as approved by the Activity.

C20 STAIR CONSTRUCTION

Provide interior and exterior stair construction. Stair design, materials and construction shall comply with IBC, and applicable codes and standards, including NFPA 101. Provide refuge area at top of stair in accordance with applicable Americans with Disability Act Design Guide requirements.

C30 INTERIOR FINISHES

C3010 WALL FINISHES

Unless otherwise noted in the RFP, primary wall finishes shall be painted gypsum wall board. Provide fire resistive construction and finishes for fire separation between areas of the building in accordance with the latest adopted version of the IBC, and NFPA 101. Provide water resistant cementitious board at floors and walls of tubs and showers.

1. **Ceramic Tile**: Provide ceramic tile wall systems as defined in the Tile Council of America (TCA) handbook for ceramic tile installation and materials for the service requirements listed. Provide installation and materials in accordance with ANSI A108/A118 series standards, except do not use organic adhesives. Provide manufacturer's full range of colors and styles. Tile shall be a minimum of one grade above base grade. Coordinate with ceramic bath accessories for modularity. Include all trim pieces, caps, stops, and returns to complete installation.

2. **Wallcovering**: Vinyl wallcovering shall conform to ASTM F793, Category V Type II, 371 g to 624 g (13.1 to 22 ounces) total weight per square yard and width of 1370 mm (54 inches). Provide ASTM F793, Category VI, Type III, 624 g (22 ounces) and above to cover rough textured walls such as masonry. High performance fabric wallcovering shall be woven or non-woven Class A, fire resistive material, a minimum of 1219 mm (48 inches) wide, with a soil repellent finish and a minimum of 340 g (12 ounces) per square yard exclusive of backing. "Tackable" wall covering shall be "self-healing" from tack penetration through the covering into the substrate. Acoustical wallcovering shall be textured, woven or non-woven, Class A fire resistive material with an acrylic backing, a minimum of 1219 mm (48 inches) wide and a minimum of 454 g (16 ounces) per square yard. The material shall have an NRC rating of .15 on gypsum board in accordance with ASTM C423. Do not install wall covering on interior face of exterior walls.

C3020 FLOOR FINISHES

Provide new flooring materials as required. All flooring materials, adhesives, finish coats, sealers and mortar materials shall meet or exceed EPA requirements for toxic substance content restrictions and air quality requirements; and shall meet or exceed fire protection requirements, such as smoke and flame spread requirements. When laying broadloom carpets and resilient flooring, use the widest sheet materials available to avoid or minimize the number and extent of seams. When seams are required, locate seams at infrequent traffic areas. Contractor is required to submit seam layout to Contracting Officer for approval prior to installation.

1. **Ceramic Tile**: Provide ceramic tile floor systems as defined in the Tile Council of America (TCA) handbook for ceramic tile installation and materials for the service requirements listed. Provide installation and materials in accordance with ANSI A108/A118 series standards, except do not use organic adhesives. Provide manufacturer's full range of colors and styles. Tile shall be a minimum of one grade above base grade.

   Provide ceramic or porcelain tile with a minimum breaking strength of 202kg (300 pounds), ASTM C648, and a maximum absorption rate of 0.5%, ASTM C373. Tile shall have a minimum coefficient of friction (wet and dry) of 0.6, ASTM C1028.

2. **Resilient Flooring**: Shall meet or exceed applicable ADA horizontal requirements, and shall be installed per manufacturer's recommended methods and adhesives. Provide manufacturers full line of color and pattern selections, including multi-color patterns.

   Linoleum Sheet or Tile Flooring shall be 2.5 mm (0.10 inch) gage; minimum 250 psi static load limit, ASTM F970; and with multi-color pattern and color extending throughout thickness, ASTM F2034, Type I. Resilient homogeneous vinyl sheet flooring shall be commercial quality, 2.0 mm (0.080 inch) overall gage, with minimum 1.6 mm (.066 inch) thick wear layer, protective urethane finish, ASTM F1303, Type II, Grade 1, Class A. Resilient vinyl composition tile shall be commercial grade, 3 mm (.125 inch) gage, FS SS-T-312B (1), Type IV, Comp. 1, Class 2, through pattern.

3. **Carpet**: Carpet manufacturer and installer shall be experienced, established and in good standing with the industry. Carpet, broadloom or tile, shall be installed per the Carpet & Rug Institute's recommendations. Carpet shall be tufted, textured loop, cut/loop or tip sheared, a minimum of 26 oz. face weight, minimum density of 6600, 100% premium branded yarn- or solution-dyed, Type 6 or 6.6 continuous hollow filament nylon. Carpet shall be multi-color and patterned for soil and wear hiding properties. Carpet shall have high performance backing warranted against zippering, edge raveling and delamination, be anti-static and anti-microbial. Carpet shall meet Flammability ratings; generate less than a 450 rating, ASTM E662; meet the Critical Radiant Flux Classification of not less than 0.45 W/sq. cm., ASTM E648. Where indicated in the room requirements, provide attached polyurethane cushion or separate polyurethane cushion for double stick pad installations, ASTM 1667 and ASTM 3676.

4. **Wall Base**: Provide porcelain or ceramic tile base for porcelain or ceramic tile floor. Provide solid, through color preformed rubber or vinyl base for carpeted/resilient flooring areas. Provide a sealant between base and floor finish in all wet areas.

C3030 CEILING FINISHES

Unless otherwise noted in the room requirements, acoustical ceiling panels shall be 24 inch by 24 inch, with a minimum light reflectance of .75, Class A, flame spread 25 or less and smoke development of 50 or less, ASTM E84. Acoustical ceiling panels shall have minimum 60% recycled content and conform to ASTM E1264. Panels shall have a factory-applied standard washable painted finish or Type IV with factory-applied plastic membrane-faced vinyl, Form: 1, 2 or 3. Provide square edge except as noted.

Unless otherwise noted in the room requirements for entrance lobby, restrooms and showers, provide a painted, suspended gypsum board ceiling. Exposed structural systems shall be painted.

C3040 PAINTING

All painting and coating materials shall be low VOC, comply with local air quality control laws and, regulations; and conform to the Master's Painters Institute's (MPI) *Architectural, Interior Systems Manual*and the MPI's *Maintenance and Repainting Manual*recommendations for paint systems, surface preparation and applications.

Provide minimum of one prime coat and two finish coats. The prime coat shall not be combined with texture or other coatings. Seal and prime all surfaces to cover underlying stains or discoloration that may affect finish paint. Finish coats shall provide full coverage of undercoats and

substrates. All walls and ceilings in wet area shall have semi-gloss paint. All wood or metal cased openings, door trims and casings, window trims and casing, and other finish trim shall have semi-gloss paint. All interior walls and ceilings shall have satin or eggshell finish. For previously painted surfaces, prime all surfaces to ensure compatibility of finish coats. Do not paint prefinished surfaces except as noted.

Provide Institutional Low Odor/Low VOC Latex paint or High Performance Architectural Latex systems as defined and approved by the MPI Systems Manual for the various substrates required to be painted.

Paint/Color Selection: Provide paint systems tested to "Detailed Performance Level" standard as defined by MPI. Paints shall be readily available for purchase in standard colors.

SECTION D. SERVICES

D10 CONVEYING Elevators and Escalators - Not used

D20 PLUMBING

Provide plumbing fixtures, appliances, and equipment complete and usable as required by Part 3. All plumbing fixtures, appliances and equipment, piping, valves, accessories, and appurtenances shall comply with International Plumbing Code (IPC) and all other applicable codes and standards, including energy, water conservation, and local activity regulations and standards. Provide all plumbing fixtures to meet current criteria of EPA Watersense program http://www.epa.gov/watersense

1. **Domestic Water**: Provide ASTM B 88 Type K or L copper tubing and fittings for pipe sizes 4 inches or smaller. Provide Type L tubing above ground with solder fittings. For buried piping, use Type K tubing with solder fittings, or Chlorinated polyvinyl chloride (CPVC) Plastic pipe, fittings, and solvent cement per ASTM D 2846/D 2846M for sizes 4 inches and smaller.

   Provide mineral fiber insulation with vapor barrier on domestic water (hot and cold) supply and recirculation piping. Provide re-circulating pumps or instantaneous water heaters for hot water systems with fixtures greater than 100 ft from hot water source. Provide water hammer arrestors per PDI STD WH-210 as required for rapid water shut off scenarios. All water valves except for fixture shut off valves shall be ANSI B16.18 brass, full port ball type. All plumbing fixtures shall have separate shut off valves. All piping shall be concealed in walls, attic spaces, or in crawl spaces under floors. Provide access panels for valves behind walls. No under slab water piping is allowed. Fittings for annealed copper tubing shall conform to ANSI Bl6.22. Solder and flux shall be lead free. Exposed exterior piping is prohibited unless otherwise not practical. Provide identification for piping and equipment.

2. **Wall Penetrations**: Piping which penetrates fire rated walls shall be completely sealed to maintain fire resistance integrity as required by Code. Penetrations through walls that are not fire rated shall be adequately supported and sealed. Pipe penetrations through exterior walls shall be sleeved, caulked with weatherproof sealant and provided with finish trim.

D2010 PLUMBING FIXTURES

Fixtures shall be provided complete with fittings, and chromium-plated, or nickel-plated brass (polished bright or satin surface) trim. All fixtures, fittings, and trim, shall be from the same manufacturer and shall have the same finish. Access panels shall be provided for all bathtubs and showers, except at exterior and party walls and where tub or showers are back to back. Provide cleanouts in accordance with the plumbing code. Rotate or extend cleanouts required to facilitate maintenance and clearing of blockage in waste piping.

1. **Faucets**: All faucets shall be brass construction, washerless type, with seals and seats combined in one replaceable ceramic disk valve cartridge designed to be interchangeable with all lavatories, bathtubs and kitchen sinks, or having replaceable seals and seats removable either as a seat insert or as a part of a replaceable valve unit. Faucets provided shall be of the same type and manufacturer throughout the facility, unless otherwise noted. Lavatory faucets shall be U.S. Environmental Protection Agency (EPA) WatersenseÂ® certified and labeled bathroom sink faucets.

2. **Water Closets**: Water closets shall be in accordance with ANSI A112.19.2, with trim conforming to A112.19.5. Water closets shall be vitreous china and have an elongated bowl with trip lever, unlined tank, close coupled siphon jet, floor outlet with wax gasket,

flange and an anti-siphon float valve. Provide white closed front seat and cover for private toilets and open front seat cover for public facilities. Water consumption shall be no greater than 1.6 gallon maximum per complete flushing cycle. Provide self-closing metering type flush valve on flush valve type water closets, unless electronic control is specified in Part 3. Maximum flush volume shall not exceed 1.28 gallon per flush (GPF) (4.8 Liter per flush (LPF)) for single function flush valves. Dual function flush valves shall provide a flush of 0.8 to 1.6 GPF (3.0 to 6.0 LPF) or 1.28 GPF (4.8 LPF) average for 2 low volume flushes and one high volume flush. Tank type water closets shall be U.S. Environmental Protection Agency (EPA) WatersenseÂ® certified and labeled toilets.

3. **Urinals**: Provide U.S. Environmental Protection Agency (EPA) WatersenseÂ® certified and labeled ceramic-type urinals.

   Non Water Use Urinals: ASME A112.19.2, white vitreous china, wall-mounted, wall outlet, non-water using, integral drain line connection, with sealed replaceable cartridge or integral liquid seal trap insert. The urinal and trap assembly shall maintain a sufficient barrier of a biodegradable immiscible liquid to provide the trap seal and inhibit the backflow of sewer gases. For urinals that use a replaceable cartridge, provide four additional cartridges for each urinal installed. Provide an additional quart of biodegradable liquid for each urinal installed. Provide ASME A112.6.1M concealed chair carriers. Installation and testing shall be in accordance with the manufacturers' recommendations. Drain lines that connect to the urinal outlet shall not be made of copper tube or pipe. Urinal design and installation shall be ADA compliant. Slope the sanitary sewer branch line for non-water use urinals a minimum of 1/4-inch per foot. Manufacturer shall provide an operating manual and on-site training for the proper care and maintenance of the urinal.

4. **Lavatories**: Unless otherwise specified by Part 3, lavatories shall be integral to the vanity countertops. Each lavatory shall be provided with hot and cold water tempered by means of a mixing valve or combination faucet.

5. **Sinks**: ASME/ANSI A112.19.3M sink, 20 gage stainless steel with integral mounting rim, minimum dimensions of 840 mm (33 inches) wide for two compartment or 560 mm (21 inches) wide for one compartment by 560 mm (21 inches) front to rear, with ledge back and undersides coated with sound dampening material.

6. **Water Coolers**: ARI 1010, wall-mounted, bubbler style, air-cooled condensing unit, 4.20 mL per second (4.0 gph) minimum capacity, stainless steel splash receptor, double wall heat exchanger, and all stainless steel cabinet. Install in accordance with the manufacturers instructions.

7. **Showers**: Provide U.S. Environmental Protection Agency (EPA) WatersenseÂ® certified and labeled showerheads connected to concealed pipe connected to copper alloy single control type mixing valve with front access integral screwdriver stops. Anchor the mixing valves and the pipe to each showerhead in wall to prevent movement. Unless otherwise specified by Part 3, showers shall be supplied with water at a temperature no more than 110Â°F by means of a pressure balance, tempering or mixing valve.

8. **Service sinks**: ASME A112.19.1M, white enameled cast-iron or ASME A112.19.2M white vitreous china, wall mounted and floor supported by wall outlet cast-iron P-trap, minimum dimensions of 560 mm (22 inches) wide by 457 mm (18 inches) front to rear with 230 mm (9 inch) splashback, and stainless steel rim guard. Provide ASME A112.18.1M copper alloy back-mounted combination faucets with vacuum breaker and

20 mm (0.75 inch) external hose threads

9. **Mop Sinks**: Pre-cast terrazzo or ASME A112.19.2M white vitreous china floor-mounted mop sink, 914 mm x 914 mm x 305 mm (36 inches x 36 inches x 12 inches). Terrazzo shall be made of marble chips cast in white Portland cement to a compressive strength of not less than 25 mPa (3625 PSI) 7 days after casting. Provide brass body drains with nickel bronze strainers cast integral with mop sink. Provide stainless steel rim guard for mop sink. Provide chrome-plated exposed hot and cold water faucets ASME A112.15.M wall-mounted copper alloy faucets swing spout with 20 mm (3/4 inch) hose connection, vacuum breaker, and pail hook. Provide mop hanger on wall above sink suitable for four mops.

10. **Laundry Sinks**: ANSI Z124.1, plastic, two compartment, minimum dimensions of 1016 mm wide by 533 mm (40 inches wide by 21 inches) front to rear, with floor-supported steel mounting frame secured to wall. Provide ASME A112.18.1M copper alloy centerset faucets, swing spout with aerator, and stainless steel drain outlets with cup strainers, and 40 mm (1.5 inch) adjustable P-trap with drain piping to vertical vent stack.

11. **Emergency Eyewash**: ANSI Z358.1, wall-mounted self-cleaning, non-clogging eye and face wash with quick opening, full-flow valves, stainless steel eye and face wash receptor. Provide copper alloy control valves. Pressure-compensated tempering valve is required for emergency fixtures, with leaving water temperature setpoint adjustable throughout the range 15.5 and 35 degrees C (60 to 95 degrees F) unless cold water supply meets temperature criteria.

D2020 DOMESTIC WATER DISTRIBUTION

1. **Natural Gas or Propane Fired Storage Water Heaters**: Provide high efficiency storage type natural gas or propane fired water heaters per ANSI Z21.10.1 or ANSI Z21.10.3 meeting AGA requirements. Unit efficiency shall meet or exceed that listed in the Title-24 Standards. Water heaters shall be equipped with glass-lined steel tanks, minimum R-15 polyurethane foam insulation, replaceable anodes, and adjustable range thermostat to allow hot water settings between 43 and 71 degrees C (110 and 160 degrees F). Water heater warranty shall be a minimum of 10 years. Provide vent in accordance with NFPA 54. Provide low NOx burners that meet SCAQMD requirements. Install in accordance with manufacturer's instructions and the code. Where earthquake loads are applicable, water heater supports shall be designed and installed for seismic forces in accordance with the International Building Code.

2. **Electric Water Heaters**: Provide electric water heaters with double heating element per UL 174. Unit efficiency shall meet or exceed that listed for FEMP or ENERGYSTAR, or as listed in ASHRAE 90.1, whichever is greatest. Water heaters shall be equipped with glass-lined steel tanks, high efficiency type, insulated with polyurethane foam insulation, replaceable anodes, and adjustable range thermostat to allow hot water settings between 43 and 71 degrees C.

3. **Domestic Water Boilers**: Boilers shall be designed, tested, and installed per ASME CSD-1 (Controls and Safety Devices) and ASME BPVC (Boiler and Pressure Vessel Code). The boiler shall meet the requirements of the UL 795, NFPA 85, ANSI Z83.3, and ASME CSD. Boilers must be certified by Naval Personnel or a contractor approved

by the Contracting Officer.

D2030 SANITARY WASTE & VENT

All new sewers below concrete slab shall be solid core, minimum schedule 40 (DWV Type), ABS in accordance with ASTM 2661. New waste and vent piping above floor shall be Schedule 40 PVC (DWV Type) ASTM 2665 or ABS ASTM 2661. Use of ABS plastic pipe shall conform to the IBC and IPC. Provide pipe sizing, configurations, and cleanouts as required by the IPC. Cellular core plastic pipe is not allowed. SOVENT systems are not allowed.

D2040 RAINWATER DRAINAGE

Below concrete slab shall be solid core, minimum schedule 40 (DWV Type), ABS in accordance with ASTM 2661. Above floor shall be cast iron hubless, or hub and spigot, or Schedule 40 PVC (DWV Type) ASTM 2665 or ABS ASTM 2661 as indicated in Part 3. Pipe materials shall conform to the IBC and IPC. Provide pipe sizing, configurations, and cleanouts as required by applicable codes and standards.

D2090 OTHER PLUMBING SYSTEMS

Natural Gas Piping Systems: Exterior above grade natural gas piping shall be schedule 40 galvanized steel pipe with threaded fittings and joints. Underground exterior gas piping shall be polyethylene pipe that satisfies the requirements of NFPA 54, ASTM D2513-01, and ASME B31-8. Provide warning tape at 12 inches below grade directly above buried gas pipes. Below grade metal gas piping is prohibited. Interior gas piping shall be ASTM A 53, schedule 40 black steel with ASME B16.3 threaded fittings and joints. The use of semi-rigid tubing and flexible connectors for gas equipment and appliances is prohibited except for final connections to the equipment and appliances where they shall be provided. Provide flexible gas connections in accordance with ANSI Z21.45 and not more than 40 inches long. Provide accessible gas service with shutoff valve for all equipment. Gas piping shall conform to NFPA 54 and shall be pressure tested in accordance therewith. . Gas piping is considered a fragile utility in the content of UFC 4-010-01, *DOD Minimum Antiterrorism Standards for Buildings*.

D30 HEATING, VENTILATION AND AIR CONDITIONING (HVAC) SYSTEMS

The HVAC systems shall comply with the latest edition of the International Mechanical Code, International Plumbing Code, ASHRAE Standards, National Electrical Code, National Fire Protection Association Publications, International Building Code, and California Title 24 or ASHRAE 90.1 energy efficiency standards (the more stringent of the two) unless otherwise specified in Part 3. All equipment, appliances, ductwork and accessories shall comply with applicable codes and standards. For projects located in California, also comply with California Energy Commission (CEC) efficiency rating requirements as stated in Ca. AB 970 Title 24. The Contractor shall certify that the installation is in conformance with the applicable codes and standards at the completion of the contract, prior to final invoice being processed and final acceptance. Provide Energy Star rated equipment where available. Provide equipment with performance in excess of Energy Star requirements where specified.

1. **Equipment Clearance**: Provide working space around all equipment. Provide all required fittings, connections and accessories required for a complete and usable system. All equipment shall be installed per the manufacturer's recommendations. Where the word "should" is used in manufacturer's instructions, substitute the word "shall".

2. **Material and Equipment Qualifications**: All materials and equipment shall have been in satisfactory commercial or industrial use for 2 years prior to the bid opening. The 2-year use shall include applications of equipment and materials under similar circumstances and of similar size. The product shall have been for sale on the commercial market through advertisements, manufacturer's catalogs, or brochures during the 2-year period.

3. **Motors**: Single-phase fractional-horsepower alternating-current motors shall be high efficiency types corresponding to the applications listed in NEMA MG 11. Select polyphase motors based on high efficiency characteristics relative to the applications as listed in NEMA MG 10. Additionally, all polyphase squirrel-cage medium induction motors with continuous ratings shall meet or exceed energy efficient ratings per Table 12-10 of NEMA MG 1. Provide controllers for 3-phase motors rated 0.75 kW (1 hp) and above with phase voltage monitors designed to protect motors from phase loss and over/under-voltage. Provide means to prevent automatic restart by a time adjustable restart relay. For packaged equipment, the manufacturer shall provide controllers including the required monitors and timed restart. Provide reduced voltage starters for all motors 25 hp and larger.

4. **Equipment Support**: Provide housekeeping pads and vibration isolators under all floor-mounted equipment.

5. **Coatings**: When required in Part 3, provide chiller and air handler coils with copper tube/copper fin coil construction or immersion applied, baked phenolic or other approved coating. Field applied coatings are not acceptable. Mechanical equipment casings shall have painted finishes that pass a salt-spray test conducted per ASTM B117 for duration of at least 500 hours.

6. **Equipment Insulation**: Provide insulation on all chilled water equipment. Insulate hot and chilled water pumps and equipment as suitable for the temperature and service in rigid block, semi-rigid board, or flexible unicellular insulation to fit as closely as possible to equipment. Provide vapor retarder for chilled water applications.

7. **Acoustical considerations**: Noise levels in all areas served (supply, return, and exhaust) by a mechanical system shall comply with ASHRAE Design Guidelines for HVAC related background sound in rooms as indicated in the lasted ASHRAE Fundamentals Handbook. The RC-rating method shall be utilized.

D3020 HEAT GENERATING SYSTEMS

1. **Boilers**: Boilers shall be designed, tested, and installed per ASME CSD-1 (Controls and Safety Devices) and ASME BPVC (Boiler and Pressure Vessel Code). The boiler shall meet the requirements of the UL 795, NFPA 85, ANSI Z83.3, and ASME CSD. Do not provide watertube boiler(s) for hydronic heating when size permits otherwise. Provide insulated boiler stack in accordance with manufacturer's recommendations and conform to NFPA 211 or provide pre-manufactured, multi-wall stacks complying with NFPA 54 or NFPA 58 and UL-listed. Low pressure boilers shall be equipped with one or more pressure relieving devices, adjusted and sealed to discharge at a pressure not to exceed the maximum allowable working pressure of the boiler. The combined capacity of these devices shall be such that with the fuel burning equipment installed and operating at maximum capacity, the pressure cannot rise more than 5 psi for steam boilers or 10% for water boilers above the maximum allowable working pressure of the boiler. Pressure relieving devices shall be installed as required by the referenced code, be ASME stamped and rated, and shall be installed with the valve spindle in the vertical position. Provide with manual lifting device for periodic testing. Boilers shall comply with the local air quality regulations. Boilers shall be equipped with pressure and temperature gauges as required for proper maintenance and operation. Thermometers shall also be provided at the inlet and exit of the boiler, and shall be visible to the operator from the operating area.

2. **Furnaces**: UL-listed, factory assembled, self contained, forced circulation, furnace. Provide electronic ignition system. Unit shall be design certified by AGA, GAMA efficiency rating certified, for gas furnaces and NFPA 31 for oil furnaces. Provide with cooling coil as necessary. Furnaces shall comply with the local air quality regulations.

D3030 COOLING GENERATING SYSTEMS

1. **Chillers**: Air-cooled chillers shall be type indicated in Part 3 and meet the requirements of ARI 550/590-98. Provide control panel with the manufacturers' standard controls and protection circuits. If DDC system is required in project, provide a control interface for remote monitoring of the chiller's operating parameters, functions and alarms from the DDC control system central workstation. Provide complete start-up and operational testing of chiller equipment.

2. **Direct expansion systems**: Provide units factory assembled, designed, tested, with ducted air distribution and rated in accordance with ARI 210/240 or ARI 340/360. Refrigerant piping size shall be per the manufacturer's recommendations. Insulate refrigerant piping suction lines and condensate drain.

3. **Refrigerants**: The use of Ozone Depleting Substances (ODS) as well as the qualifications and credentials of personnel servicing equipment that contains ODS is restricted. Refrigerants shall have an Ozone Depletion Factor (ODF) of 0.055 or less. The ODF shall be in accordance with the "Montreal Protocol on Substances That Deplete

the Ozone Layer", September 1987, sponsored by the United Nations Environment Program.

4. **Coils**: If coatings are indicated in Part 3, provide with copper tube/copper fin construction or immersion applied, baked phenolic or other approved coating that passes the 3000 hour salt spray resistance test using ASTM B117 procedure. Field applied coatings are not acceptable.

5. **Variable Refrigerant Flow (VRF) systems**: The system shall consist of VRF heat pump units, branch circuit controllers, VRF fan coil units, and associated controls. The system shall be designed to provide the facility with simultaneous heating and cooling utilizing hot gas refrigerant or sub-cooled liquid. Provide system with heat recovery. The heat pump units shall be inverter driven and shall utilize R410A refrigerant. Total capacity of the branch controllers shall be between 50% and 150% of the rated capacity. All refrigerant piping shall be sized and installed in strict compliance with the manufacturer's requirements. Refrigerant piping shall be clean, dry, and leak free. Prior to installation all refrigerant pipes shall remain sealed. During installation and prior to filling, nitrogen shall be used to maintain cleanliness and prevent oxidation and scaling while brazing.

D3040 DISTRIBUTION SYSTEMS

1. **Ductwork**: All ductwork shall be provided in accordance with the latest SMACNA guidelines. Flexible duct lengths shall not exceed 6 feet. Provide galvanized sheet metal ducts except for special exhaust systems and the following:
   a. For fume hood exhaust, kitchen hood exhaust, and dishwasher exhaust, provide stainless steel ductwork.
   b. For shower area exhausts, provide aluminum or stainless steel ductwork and sloped to drain provisions. After the shower exhaust is mixed with a volume of general exhaust air equal to 200% of the shower exhaust rate, standard galvanized construction may be used.
   c. Internal insulation-lined ductwork is prohibited in all areas. For ductwork located exterior to the building, provide externally insulated systems with sheet metal cladding. Provide external thermal insulation for all ductwork. Insulate ductwork in concealed spaces with blanket flexible mineral fiber. Insulate ductwork in Mechanical Rooms and exposed locations with rigid mineral fiber insulation. Provide insulation with factory applied all-purpose jacket with integral vapor retarder. In exposed locations, provide a jacket with white surface suitable for painting. Flame spread/smoke developed rating for all insulation shall not exceed 25/50. Minimum insulation thickness shall be the minimum thickness required by ASHRAE 90.1. Insulate the backs of all supply air diffusers with blanket flexible mineral fiber insulation.
   d. The ductwork shall be sealed with an approved duct sealer and in accordance with SMACNA standards. If leakage testing is indicated in part 3, the duct leakage shall not exceed 2%.
   e. Provide manual volume dampers in each branch take-off from the main duct to control air quantity. Dampers shall conform to SMACNA DCS. Dampers shall be installed in accessible locations.

2. **Fire Dampers**: Fire dampers shall be rated per UL 555. Fire dampers shall be dynamic type rated for closure against a moving airstream. Provide fire dampers that do not intrude into the air stream when in the open position.

3. **Piping**:

a. Provide insulated, steel piping for sizes 4 inches and larger and insulated copper piping for sizes less than 4 inches for water supply and return piping to serve the HVAC equipment throughout the facility.
b. Provide system flushing and start-up for water systems.
c. Oil piping: ANSI/ASTM A53 or A106 piping with associated ASME fittings or ASTM B88, type L or M copper tubing with ASME B16.26 flared fittings or compression type fittings.

4. **Exhaust Fans And Ducts**:
   a. **General:** Exhaust fans shall be sized to move the volume of air required to comply with International Mechanical Code for the areas requiring exhaust.
   b. **Bathroom, restrooms and Utility Room Exhaust Fans:** Exhaust fans shall be sized to give not less than 10 air changes per hour in the space to be ventilated. Fans shall have a maximum sound level of 3 sones and be separately switched from light.
   c. **Flues:** When required, provide new Type B, U.L. listed, double wall flues. Flue installation shall be in accordance with the International Mechanical Code.

5. **Air handling units**: Modular construction, double wall air handling units with minimum of 25 mm (1 inch) casing insulation. Provide ARI 430 certified fans and ARI certified coils. Provide stainless steel, positive draining condensate drain pan. For 100% outside air units provide capability for cooling, heating, dehumidification and reheat.

D3050 TERMINAL AND PACKAGE UNITS

1. **Unit ventilators**: Unit shall be factory assembled unit ventilator capable of up to 100% outdoor air ventilation and UL-listed.

2. **Unit heaters**: ANSI Z83.8 and AGA label. Equip each heater with individually adjustable package discharge louver. Provide with thermostat.

3. **Fan coil units**: UL-Listed, factory assembled and tested fan coils, ARI 440 and ARI certified.

4. **Packaged units**:

   Factory packaged rooftop units in accordance with ARI 430 and suitable for outdoor installation. Provide with manufacturer's roof curb.

   Packaged through wall units shall be factory assembled air conditioner or heat pump and rated in accordance with ARI 310 or ARI 380 and ARI certified. Unit shall include heat and operate under the standard unit controls. Units shall be designed to allow ease of maintenance by use of a wall sleeve. Units shall have internal condensate removal (condensate shall not be externally drained).

D3060 CONTROLS AND INSTRUMENTATION

1. **General**: Provide stand-alone or distributed direct digital controls, as required in Part 3.

2. **Distributed Direct Digital Controls (DDC)**: DDC hardware shall be UL-916 rated. Use controllers in a distributed control manner. Controllers shall be stand alone with an

internal clock and modem. The total number of I/O hardware points shall not exceed 48 in any controller. Provide sufficient memory for each controller to support required control, communication, trends, alarms, and messages. Provide communications ports for controller to controller, on-site interface, remote workstation interface, and telecommunications interface. When providing a partial DDC system or connecting to an existing DDC system, provide a laptop computer with all necessary software for user interface.

D3070 SYSTEMS TESTING AND BALANCING

All HVAC water and air systems, both new and retrofit, shall be TABed in accordance with NEBB or AABC standards. As part of any TAB air balancing effort, acceptable air quantity variations shall be 0 to -10% for exhaust systems and 0 to +10% for supply air systems.

D40 FIRE PROTECTION

Provide new or extend existing Automatic Fire Sprinkler systems, Smoke and Heat detection systems, Fire Alarm and Mass Notification systems as required. The work for fire sprinklers, fire alarm, smoke detection, and heat detection shall be provided by contractors licensed to perform such work.

Project Requirements: Prior to the start of design, the Designer of Record shall meet with the Government's Fire Protection Engineer to determine the extent and types of fire protection required**.**

D4010 FIRE ALARM AND DETECTION

Fire alarm system shall include manual stations, system smoke detectors, duct smoke detectors, heat detectors, audio/visual alarms, connection to basewide fire alarm monitoring, electrical supervision of fire pump controllers, and electrical supervision of all sprinkler system alarm and supervisory devices as required.

D4020 FIRE SUPPRESSION WATER SUPPLY AND EQUIPMENT

The water supply information is provided for bidding purposes. The design point of connection to existing water supply shall require the approval of the Contracting Officer. The FPE DOR shall conduct additional flow tests after contract award prior to any design submissions. Tests shall be coordinated through the Contracting Officer.

D4040 SPRINKLERS

Areas subject to freezing shall be provided with a dry pipe system.

D50 ELECTRICAL

D5010 ELECTRICAL SERVICE & DISTRIBUTION

Provide interior electrical wiring, fixtures, switches, outlets, and apparatus in accordance with applicable codes and standards. The electrical system shall conform to NFPA 70. Power and lighting circuits shall be separate.

1. **Wiring**: All wiring shall be in electrical metal conduits and shall be concealed except in the industrial spaces and at locations indicated in Part 3. No conductors shall be smaller than No. 12 AWG, copper wires. Wiring below slab or underground shall be in Schedule 40 PVC with ground wire. Exposed conduits on the exterior of the building are prohibited. Provide a ground conductor for each circuit; conduits shall not be used for grounding. Use of cable assemblies Types AC, MC, or MI and flat conductors are prohibited. Circuit breakers shall be bolt-on type. Series rated circuit breakers and fusible panelboards shall not be used.

2. **Outlet Circuits**: Lighting and convenience outlets shall be on separate circuits. Install GFI protected receptacles at all wet or damp areas. Location of outlets shall be as required by applicable codes and standards. Provide extra outlets for maintenance and service staffs in spaces such as corridors, hallways and other public spaces as identified below. All exterior outlets shall be on separate circuits, shall be GFI protected, and equipped with a cover to prevent accidental water infiltration into the devices.
   In addition to the location requirements specified by NFPA 70, locate general purpose and dedicated outlets in accordance with the following:
   a. Mechanical equipment: Provide receptacle within 7.6 m (25 ft) of mechanical equipment on the interior and exterior of buildings.
   b. Office, staff support spaces, and other workstation locations: One receptacle for each workstation with a minimum of one for every 3050 mm (10 ft) of wall space. When less than 3500 mm (10 ft) of wall at the floor line, provide a minimum of two receptacles spaced appropriately to anticipate furniture relocations. Limit loads to a maximum of four workstations per 20 amp circuit. See Appendix C, Table C1 for workstation load data.
   c. Conference rooms and training rooms: One for every 3.6 m (12 ft) of wall space at the floor line. Ensure one receptacle is located next to each voice/data outlet. Provide one receptacle above the ceiling to support video projection device. Extend circuit to wall location for connection to motorized screen. When it is expected that a conference room table will be specifically dedicated to floor space in a conference room, locate a floor-mounted receptacle under the table. This receptacle may be part of combination power/communications outlet.
   d. Provide power outlets throughout the building to serve all proposed equipment, including government furnished equipment, and allow for future reconfiguration of equipment layout. Provide power connections to all ancillary office equipment such as printers, faxes, plotters, and shredders. Provide dedicated circuits where warranted.
   e. In each telecommunications room provide a dedicated 20 amp circuit with a receptacle adjacent to each rack or backboard for each of the following:

      1) CCTV for training systems

      2) CCSTV for security systems

      3) CATV

4) Voice systems

5) Data systems.

f. Provide dedicated receptacles as required throughout the facility for television monitors. These outlets will typically be located at the ceiling level for wall mounted television monitors.

g. Provide dedicated receptacles as required throughout the facility for tape players and disc players.

h. Corridors: One every 15 m (50 ft) with a minimum of one per corridor.

i. Janitor's closet and toilet rooms: One GFI receptacle per closet. Provide GFI receptacles at counter height for each counter in toilets such that there is a minimum of one outlet for each two sinks.

j. Space with counter tops: One for every 1.200 m (4 ft) of countertop, with a minimum of one outlet. Provide GFI protection of outlets when located within 1.8 m (6 ft) of plumbing fixtures.

k. Building exterior: One for each wall, GFI protected and weatherproof.

l. Kitchen non-residential: One for each 3.05 m (10 ft) of wall space at the floor line. Provide GFI protection when located within 1.8 m (6 ft) of plumbing fixture.

m. Child occupied spaces (including toilets): One for every 3.6 m (12 ft) of wall space. Use child safety type such as those that require rotating an integral surface cover plate to access current. Removable caps and plugs are not acceptable.

n. All other rooms: One for every 7.6 m (25 ft) of wall space at the floor line. When 7.6 m (25 ft) or less of wall at the floor line exists in a room, provide a minimum of two receptacles spaced appropriately to anticipate furniture relocations.

o. Special purpose receptacles: Designer of Record must coordinate with the user to provide any special purpose outlets required. Provide outlets to allow connection of equipment in special use rooms.

3. **Service Entrance Equipment**: When a switchboard or switchgear is required, the Designer of Record shall utilize UFGS Section 26 23 00, *Switchboards and Switchgear*, for the project specification, and shall submit the edited specification section as a part of the design submittal for the project.

D5020 LIGHTING & BRANCH WIRING

1. Lighting Fixtures: All lighting fixtures shall be energy conservation compact fluorescent except where indicated by Part 3.

   a. **Fluorescent Fixtures for Administrative and Commercial Spaces**: For offices, commercial and administrative spaces and facilities provide high efficiency ballast, and instant or rapid start recessed fluorescent fixtures.

   b. **Three-Way and Four-Way Switches**: Provide three-way or four-way switching of light fixtures as necessary to facilitate movement between adjacent spaces to allow efficient energy management.

2. **Exterior Lighting Fixtures for Large Open Areas**: Exterior lighting fixtures for large open areas such as parking lots, streets and playgrounds shall be energy efficient High-Intensity Discharge (HID) or compact fluorescent fixtures and shall comply with local regulations regarding low lighting levels to avoid light pollution.

   a. Photocell Overriding Switch: Provide photocell-overriding switch for all outdoor light fixtures.

D5030 COMMUNICATIONS & SECURITY

1. **Telecommunications Systems**: Provide a horizontal distribution system including, but

not necessarily limited to, all wiring, pathway systems, connector blocks, protectors for all copper service entrance pairs, terminators for all fiber optic cables, outlet boxes, telephone jacks, and data jacks cover plates in accordance with EIA/TIA standards. Provide Category 6 UTP telephone premise wiring where telephones are required.

2. **Public Address Systems**: Provide a Public Address system with speakers in all locations identified in Part 3.

3. **Intercommunications Systems**: Provide an Intercommunication System to allow two-way communications between all locations identified in Part 3.

4. **Television Systems**: Provide television systems to the extent specified in Part 3. Coordinate with the local Cable Company, Local users and Local Authority at the Activity for other specific requirements. The interior cable outlets and wiring shall be complete and ready for use. Wiring shall not be run exposed on any surface of the building.

5. **Security Systems**: Provide an Intrusion Detection System (IDS) to sense all perimeter doors and windows and the interior volume in at least two locations. System shall have 90-minute battery back-up and annunciate both locally and at the Base Security Office via a telephone dialer. System shall have entry/exit timer. Provide wall mounted keypad control at two locations.

D5090 OTHER ELECTRICAL SERVICES

1. **Surge Protective Device (SPD)**: Provide SPD in accordance with UFC 3-501-01.

2. **Variable Frequency Drives**: When variable frequency drives are required, the Designer of Record shall utilize UFGS Section 26 29 23 20 for the project specification, and shall submit the edited specification section as a part of the design submittal for the project.

3. **Emergency Generators**: When an emergency generator is required, the Designer of Record shall utilize UFGS Section 26 32 13.00 20 for the project specification, and shall submit the edited specification section as a part of the design submittal for the project.

4. **Automatic Transfer and Bypass/Isolation Switches**: When an Automatic Transfer Switch is required, the Designer of Record shall utilize UFGS Section 26 36 23.00 20 for the project specification, and shall submit the edited specification section as a part of the design submittal for the project.

5. **Uninterruptible Power Supply (UPS) System:** When a UPS system is required, the Designer of Record shall utilize UFGS Section 26 33 53.00 20 and shall submit the edited specification section as a part of the design submittal for the project.

6. **400 Hertz Systems**: The Designer of Record shall utilize UFGS Section 26 32 26 or 26 35 43 for the project specification, and shall submit the edited specification section as a part of the design submittal for the project.

7. **Lightning Protection**: When lightning protection is required, the Designer of Record shall utilize UFGS Section 26 41 00.00 20 for the project specification, and shall submit the

edited specification section as a part of the design submittal for the project.

8. **Building Photovoltaic System**

Provide a grid tied photovoltaic system including roof mounted crystalline photovoltaic panels, combiner boxes, inverters, and support structure.

Provide all labor, materials, equipment and supervision required to implement the design and to provide a fully operational system.

Provide PV modules with a 20-year limited manufacturer warranty that generates no less than 80% of the rated output under Standard Test Conditions (STC).

Provide start-up and testing utilizing certified technician. Submit startup and testing report.

The PV system hardware and services shall meet or exceed all applicable local, State and utility requirements, conform to the applicable codes and standards, and have passed the listing and qualification tests, listed below. (Comply with the most recent version of each document).

a. IEEE 1262 "Recommended Practice for Qualification of Photovoltaic Modules".

b. PowerMark certification for PV modules.

c. IEEE Standard 928-1986, Recommended Criteria for Terrestrial Photovoltaic Power Systems (PV system performance criteria).

d. IEEE 1547 Standard for Interconnecting Distributed Resources with Electric Power Systems

e. Underwriters Laboratories 1741-2001 (UL Standard for Inverters and Charge Controllers).

f. Underwriters Laboratories 1703 (UL Standard for Listing Photovoltaic Modules).

g. Certification of PV Equipment: All PV modules, inverters, and electrical components shall be required to be listed or recognized by an appropriate and recognized United States Safety Laboratory (for example: UL or ETL).

Provide a comprehensive "Photovoltaic Application Analysis" with a detailed description of system, application, site shading conditions and expected kW output of the rooftop photovoltaic applications. The analysis shall utilize the Solmetric Suneye or the Solar Pathfinder shading analyzers to analyze the effects of the existing site shading conditions. Analysis shall include estimated PV output in kWh per year. Coordinate rooftop application analysis with other equipment that is required to be placed on the roof to determine space available and proper solar orientation for photovoltaic equipment.

The contractor work responsibilities include at a minimum: system design, equipment selection, and PV system installations. System shall be individually capable of providing peak power output of at least proposed PV system size, 208 or 480 volt, 3-phase, 4-wire power.

The final System configuration shall allow automatic operation without operator intervention. System design and equipment specifications shall minimize maintenance requirements. System shall include metering that must be incorporated with current AMI network (Advanced Metering Infrastructure) and planned energy metering projects.

The inverter(s) disconnects and associated electrical equipment must be located in an area that is accessible, weather-protected, and secure from vandalism and personal injury.

Disconnects and over current devices shall be mounted in approved boxes, enclosures, or panel boards. Disconnects and switches shall be DC rated when used in DC applications. Metal enclosures and boxes shall be bonded to the grounding conductor.

At a minimum, electrical meters shall capture the following data on individual system performance (minimum solar irradiance, DC power, AC real power, AC current, AC voltage, and power factor (recommend ION 8600 for AC); ambient air temperature, PV cell temperature, kW, and kWh). This data shall be captured at hourly intervals for a minimum one year. Units of temperature, power, and current shall be in Fahrenheit, Watts, and Amps respectively.

Transformers, if required, shall have a minimum efficiency based on factory test results of not less than the efficiency indicated in 10 CFR 431, Subpart K, paragraph 431.196(b). Transformers shall be housed in a NEMA 4X enclosures.

Mounting structures shall be corrosion resistant to marine environment.

Provide permanent plaque or directory at each building service and power source identifying all other building services and power sources.

Operators manuals for each system component shall include detailed instructions on how to operate the system, programming and installation instructions, emergency operating procedures, default program values and set points, listing of field programmed variables and set points, equipment wiring diagrams, product model number, with Name, Address and Telephone number of local representative, and starting, operating, and shut down procedures. Include normal and emergency shutdown procedures, schedule of maintenance work, if any, recommended cleaning agents and methods, replacement parts list, including internal fuses, and warranty information.

Provide a formal 2-hour on-site training session instructing operators in the operation and maintenance of the new system, including operation and maintenance of inverters, disconnects and other system components. Instruct personnel in removal and installation of panels, including wiring and all connections. At the time of training the Contractor shall furnish, for the equipment specified, operation and maintenance manuals, record drawings and recommended spare parts lists identifying components adequate for competitive supply procurement for operation and maintenance of system.

SECTION E. EQUIPMENT AND FURNISHINGS

E10 EQUIPMENT

Equipment and Appliances: Provide appliances and equipment to fulfill the work for Part 3. Whenever possible, all appliances and equipment provided for the facilities in the contract shall be by the same manufacturer and shall be the current model available at the time of proposals. Discontinued makes and models are prohibited. All appliances and equipment shall comply with applicable Energy Star efficiency rating requirements and shall be rated as high efficiency models. Appliances and equipment on California projects shall comply with California Title 24 and be rated as high efficiency. All appliances shall be of the same manufacturer and shall be the same, or similar in color. Submit catalog information for approval by the Contracting Officer prior to purchasing, delivery and installation of the appliances at the job site. Equipment and appliances such as dishwashers, ice machines with drains, garbage disposers, and ovens/ranges are not considered FF&E.

E20 FURNISHINGS

E2010 FIXED FURNISHINGS

Window Treatments: Unless otherwise specified in Part 3 window treatments shall be as follows: Horizontal blinds shall be aluminum, washable, cleanable, installed in all windows except for bathroom, kitchen, and utility windows. Horizontal blinds shall be installed at all sliding glass doors. All blinds shall be screwed or securely anchored to wood backing and shall be inside mounted except at sliding glass door. Submit catalog information for approval by the Contracting Officer. Blinds shall have 1-inch aluminum slats, mounted within window opening. Blinds shall have separate tilt and height controls, metal truck, head channels, wand, and valance. Solar shades shall be woven polyester/resin coated fiberglass or polyester fabric with fade resistance and dimensional stability; with clutch or motorized roller operation. Roller shades shall be screwed or securely anchored to wood backing and shall be inside mounted except at sliding glass door. Submit catalog information for approval by the Contracting Officer. Blinds shall have prefinished steel or aluminum roller housing and valance. Window treatments are not considered FF&E.

E2020 MOVABLE FURNISHINGS

1. Furnishings, Fixtures and Equipment (FF&E): FF&E shall include furniture, shop equipment, audiovisual equipment (excluding motorized screens), and specialty equipment. Weapon racks, drying cages, motorized projection screens and lockers are not considered FF&E. FF&E shall be fully integrated with the building system.

   Design and provide FF&E for all areas as developed during client programming. Design an FF&E package and prepare supporting plans and procurement data in accordance with the General Interior Design Requirements UFC 3-120-10.

   The contractor shall have an NCIDQ certified Interior designer not affiliated with any furniture dealership prepare both the SID and FF&E package and participate in design charettes to develop the building floorplan. The designer must have previous experience in project types similar to this contract. As required, the contractor shall obtain services of equipment specialists to specify the audiovisual, shop, or specialty equipment. Equipment specialists shall not have any affiliation with the product specified.

   The contractor's Interior Designer shall be responsible for specifying product and installation for all FF&E for the designated facilities built under this contract, using NAVSUP Blanket Purchase Agreements, GSA federal supply schedules or other government supply sources and complying with priorities found in FAR Part 8.404.

   All fixed and movable furnishings selections shall be coordinated with Sections C10, "Interior Construction" and C30, "Interior Finishes." The FF&E shall be fully integrated with the building systems as well as the design and construction schedule.
   As an option to the contract/task order, the contractor shall be authorized to procure all FF&E with separate funding.

   a. **FF&E Package:** Provide the FF&E loose furnishings package from Government supply sources schedules according to Federal Acquisition Regulations, to include but not limited to, systems and modular furniture, training and conference furniture, seating, tables, artwork, window covering, specialty furniture and equipment, and accessories. NAVSUP Blanket Purchase Agreements (BPA) must be used whenever possible.

      The Government will provide separate funding for procurement of the FF&E

package. Upon receipt of required funding, the Contractor shall be authorized by the Contracting Officer as an option to contract/task order to procure all FF&E using predominately negotiated price schedules from GSA or other Federal contracts. The amount of the modification will be the actual cost of these items from the Federal price schedules or NAVSUP BPAs, including any freight and installation charges from the furniture supplier as well as the contractor's FF&E Handling and Administration Rate (HAR). The HAR includes all of the prime contractor's effort related to storage, coordination, handling, administration of subcontractors, and all other associated costs and profit for the procurement of FF&E. The prime contractor will propose in the contract/task order solicitation the FF&E HAR. The contractor's proposed HAR may not exceed 5% of the total FF&E costs, as noted on the bid schedule. No other charges, expenses, fees, or other markups will be authorized.

When the FF&E package is complete and accepted by the Government, the procurement option will be awarded based on the specific line items in the final package. The Government's Interior Designer will approve the final FF&E submittal. The FF&E package will be presented to the Project Manager and they will expect the Contractor to procure the FF&E exactly as specified and approved by the government Interior Designer.

Two copies of all ordering documentation shall be provided to the Contracting Officer including purchase orders and warranty information. The Contractor shall take maximum advantage of all exemptions from State and Local taxation authorities whether available to it directly or available to the contractor based on an exemption afforded the Government. The responsibility for paying applicable taxes rests with the contractor. Any state and local taxes applicable to the FF&E option will be included with the FF&E Dealer quote, if applicable.. Under regulation 1521, Construction Contractors performing work for the US Government are not required to charge the Government sales tax for the purchase of furniture. Any items purchased as building materials such as carpet are taxable. FF&E items are subject to the Buy American Act. The contractor shall not be required to secure any additional bond for the award of the FF&E option item. Any performance and payments bonds required for the FF&E option will be included in the prim contractor's FF&E HAR.

b. **Procurement and Installation:** Upon completion and Government acceptance of the design, using the Best Value Determination (BVD) method in association with the Government's Interior Design Representative, the Government will award the FF&E procurement option for the Contractor to purchase the FF&E package. The Government's Interior Designer shall provide a certification to the Contracting Officer that the process was completed. The Design-Build Contractor will receive a letter of authorization from the Contracting Officer citing the name of the furniture dealer and other information to use when accessing the Government supply sources. The FF&E package includes the installation of all furniture and furnishings as specified in the FF&E package. The installation dealer specified in the FF&E package will receive, store, if required, transport to the project site, off load, inside deliver, unpack, assemble, place/install, clean, if required, and dispose of all the trash for all furniture and furnishings. The Contractor's Interior Designer will be responsible for specifying installation services and warehousing, as required, for all collateral equipment. It is the Contractor's responsibility to coordinate the building completion, occupancy, and furniture installation dates with the installation dealer specified in the FF&E package. Any costs associated with storing or delaying furniture shipments is the responsibility of the Construction Contractor. Davis Bacon wages do not apply to the FF&E installer accessed through Government supply sources. The Contractor should anticipate providing a deposit of between 30% and 50% of the furniture costs when placing

their order.

All movable furnishings shall be installed in accordance with the manufacturer's instructions and warranty requirements. All movable furnishings shall be level and aligned and all doors, drawers and accessories shall be level and aligned to open, close and otherwise operate smoothly and securely. All systems furniture shall be installed by the systems furniture manufacturer's dealer of record and not by the General Contractor.

c. **Furnishings for Special Functions:** Contractor shall coordinate shop equipment, audiovisual equipment, and specialty equipment, with the building systems.

SECTION F. SPECIAL CONSTRUCTION AND DEMOLITION

F10 SPECIAL CONSTRUCTION AND DEMOLITION

F1010 SPECIAL STRUCTURES

1. Pre-Engineered Buildings

Provide the design and installation in accordance with the UFC 3-100-10, *Architecture* and UFC 3-301-01, *Structural Engineering.*

a. **Design Requirements -** The metal building manufacturer must be accredited by the International Accreditation Services (IAS) AC472. The Metal Building System design shall be in accordance with the Metal Building Manufacturers Association (MBMA) *Metal Building SystemsManual*. All structural design shall comply with the provisions of Section B10, "Superstructures", above.

b. **Additional Roof Design Requirements -** Roof Decking - In addition to any other load requirements, roof decking shall be designed to support a 91 kg (200-pound) concentrated load at mid-span on a 300 mm (12-inch) wide section of deck.

c. **Deflection -** the maximum deflection for -

1) Structural Members - main framing members shall be L/240.

2) Purlins and Roof Panels: The deflection due to live, snow, or wind shall not exceed L/180.

3) For buildings with masonry infill, limit frame sway to L/600th of building eave height.

4) Wall Panels - Maximum deflection of wall panels due to wind loads shall be L/120th of their respective spans except that when interior finishes are used the maximum allowable deflection shall be limited to L/180th of their respective spans.

d. **Wall and Roof materials -**

1) Alum/Zinc-Coated Steel Sheet: ASTM A792/ A792M, AZ 55.

2) Aluminum Sheet: Alloy 3004 Alclad conforming to ASTM B209.

3) Framing and Structural Members - Steel - ASTM A992 / A992M, ASTM A529/ A529M, ASTM A572/ A572M, or ASTM A588/ A588M.

4) Framing and Structural Members, Aluminum: ASTM B221 or ASTM C308

e. **Structural Tube:** ASTM A500 or ASTM B221.

f. **Fasteners** - Shall be compatible with the materials they are fastening to, be gasketed when exposed to weather to prevent leaks, and shall provide both shear and tensile strengths not less than 3,336 N (750 pounds) per fastener. The main fastening system shall use concealed fasteners, however, when exposed fasteners are needed, color fasteners shall be color coated to match wall/roof panels.

g. **Light Transmitting Roof Panels (Non-Insulated):** ASTM D3841, Type II, Grade 1.

h. **Insulation:** Blanket-type fiberglass insulation with a factory applied facing on one side and having a permeance rating of 0.05 or less in accordance with ASTM E96. Flame Spread Rating 75 or less, and a Smoke Developed Rating of 150 or

less when tested in accordance with ASTM E84.

i. **Panel Finish -** Factory Color Finish - Provide factory applied baked coatings to the exterior and interior of metal wall panels and metal accessories. Provide exterior primer standard with panel manufacturer but not less than 0.8 mil dry film thickness (DFT). Provide PVDF exterior finish top coat of 70 percent inorganic pigments with 0.8 mil DFT. Provide factory-applied clear finish over the color topcoat and edge coating for projects within 91 meters of a water shoreline or industrial environments. Field apply 70 percent PVDF clear coat to unfinished panel edges or field cut panels. Interior finish exposed to sun or rain shall be the same coating and DFT as the exterior coating. Interior finish protected from sun or rain exposure shall receive 1.0 mil DFT coating of siliconized polyester (SMP) resin coating with organic or blended pigments and manufacturer's standard primer.

F20 SELECTIVE BUILDING DEMOLITION

In general terms, demolition work shall include the removal and effective management and disposition of existing construction and or structures. Contractor shall take care to prevent damage to existing utilities and construction that are not scheduled for demolition. If damage occurs, the Contractor shall make repairs to the satisfaction of the Contracting Officer and at no cost to the Government. Comply with local Activity and Installation local requirements regarding demolition and removal. Unless otherwise specified in Part 3, all demolished materials and equipment must be removed from government property in accordance with applicable laws and regulations, including local Activity or Installation regulations. Selling of demolished or salvaged materials and equipment on government properties is prohibited.

Demolition Plan and Environmental Protection Plan: No demolition work shall take place until a Demolition Plan, Environmental Protection Plan, Safety Plan (including Activity Hazard Analysis), Asbestos Abatement Plan, and a Lead Abatement Plan have been submitted to, and approved by, the Contracting Officer. The Plans shall take into consideration, and indicate method of removal, disposition, and abatement of environmentally hazardous materials. Demolition, disposition, and abatement of hazardous materials must comply with all applicable Local, State, and Federal regulations and laws. If destructive investigation is to occur, the Contracting Officer shall approve a Destructive Investigation Plan.

When hazardous materials such as asbestos, lead paint, PCB and other hazardous materials are involved in the performance of the work, the contractor shall abate, remove and manage the hazardous materials in construction and finish materials such as insulation, flooring, wall materials, ceiling materials, roofing materials, heating, plumbing, ventilation, air conditioning equipment and installations in accordance with National as well as local Environmental Protection Laws and Regulations.

F2020 HAZARDOUS COMPONENT ABATEMENT

1. **Asbestos in DoD Schools**: For projects that require removal or disturbance of asbestos containing materials within DoD schools, perform work in accordance with the edited UFGS 02 82 14.00 10, *Asbestos Hazard Control Activities*.

2. **Asbestos Materials**: Asbestos shall be removed, transported and managed in accordance with the following regulations: 29 CFR 1926.1101, and 40 CFR 61-Subpart M.

   Category I & II Nonfriable: Demolition of Category I & II nonfriable asbestos containing materials (approved to be left in place during building demolition) shall be performed in accordance with 40 CFR 61 - Subpart M.

3. **Lead Based Paint in Child Occupied Facilities**: For projects that require removal or disturbance of painted surfaces within a child occupied facility, perform work in accordance with the edited UFGS 02 83 19.00 10, *Lead Based Paint Hazard Abatement, Target Housing and Child Occupied Facilities.*

4. **Paint Containing Lead, Cadmium and Chromium**: Work which requires the disturbance of paint that have been determined to contain all or any of the following: lead, cadmium and chromium must be performed in accordance with: 29 CFR 1926.62, 29 CFR 1926.1126 and 29 CFR 1926.1127.

5. **Mercury & LLR Components**: Work which requires removal of mercury and LLR

components shall be performed in accordance with: 29 CFR 1910.1000, 10 CFR 20, and 40 CFR 273.

6. **PCBs**: Work which requires removal of PCB containing components or materials shall be performed in accordance with 29 CFR 1910.1000, 40 CFR 761, and 40 CFR 273.

7. **Hazardous Materials Reporting**:
   a. **Daily Report**: Notify the Contracting Officer of work involving hazardous materials abatement and removal, including the quantities involved, on daily reports.
   b. **Hazardous Material Inventory Report:** The Contractor shall provide a list of all hazardous materials used on the site.

SECTION G. BUILDING SITEWORK

G10 SITE PREPARATIONS

1. **General Requirements**: Building site work includes site preparation, site improvements, site civil/mechanical utilities, site electrical utilities, exterior furnishings, landscaping, and irrigation. Provide site work in accordance with UFC 3-201-01, *Civil Engineering*.

2. **Project Limitations**: Prior to the start of design, the contractor shall determine the exact limit-of-work line for the project periphery, considering items such as, but not limited to, utility work, landscape re-vegetation of disturbed areas, and lay down areas. The Civil Engineer and Landscape Architect of Record shall determine limit-of-work lines. Minimize the impact of construction activity on operations and neighboring facilities.

3. **Geotechnical Data**: A geotechnical engineer shall conduct the subsurface exploration, investigation/evaluation, testing, and analysis that the Designer of Record deems necessary for the design and construction of the proposed facilities, including building pad, structure, pavement sections, repairs, overlays, stormwater management facilities, utility structure foundations, septic systems, and other features requiring soil support.

G1010 SITE CLEARING

1. **Existing Utilities**: When the Contractor is to work at a site that has existing utilities, the contractor is responsible for coordination with Contracting Officer and utility companies for staking out, capping, connection and relocation of any existing utility systems or traffic interruption. Notify utility locator service for area where Project is located before site clearing.

2. **Interruption**: All interruption to the existing utilities and traffic shall be coordinated with and approved by the Contracting Officer not less than 14 calendar days in advance of such interruption.

G1020 SITE DEMOLITION & RELOCATIONS

Abandon utility systems in-place conforming to applicable codes and regulations, removing their presence from the ground surface and clearly indicating that they have been abandoned. Remove utilities underneath or within 3.0 m (10 feet) of any new facilities. Fill abandoned gravity systems with flowable fill. Fill abandoned utility system piping under pavements subject to potential vehicle loading with flowable fill.

Remove existing utility structures to 900 mm (3 feet) below existing or new adjacent grade, whichever is greater. Break up bases to permit drainage. Fill with clean sand.

Comply with the requirements of the utility provider concerning utility relocation.

G1030 SITE EARTHWORK

The DOR shall utilize UFGS Section 31 23 00.00 20 for the project specification and shall submit the edited section as a part of the design submittal. Perform quality assurance for earthwork in accordance with UFGS Section 31 23 00.00 20. If sheeting/shoring or dewatering is required, the Contractor shall provide a registered Professional Engineer to provide excavation, sheeting, shoring, and dewatering plans and inspection of excavations and soil/groundwater conditions throughout construction. The Engineer shall be responsible for performing pre-construction and periodic site visits throughout construction to assess site conditions. The Engineer, with the concurrence of the contractor and the Contracting Officer, shall update the excavation, sheeting, shoring, and dewatering plans as construction progresses to reflect actual site conditions and shall submit the updated plan and a written report (with professional seal) at least monthly informing the Contractor and the Contracting Officer of the status of the plan and an accounting of Contractor adherence to the plan; specifically addressing any present or potential problems. The Engineer shall be available to meet with the Contracting Officer at any time throughout the contract duration.

G20 SITE IMPROVEMENTS

Provide site improvements as required to make a useable facility that meets functional and operational requirements, incorporates all applicable anti-terrorism, force protection and physical security requirements and blends into the existing environment.

Provide site improvements in conformance with applicable requirements of the Uniform Federal Accessibility Standards.

1. **Pavements**: For work in and adjacent to existing pavements, the Contractor is required to match the existing adjacent finish elevation, materials, paving section and texture, unless otherwise indicated in Part 3 or directed by the Contracting Officer.

   Provide pavement design and pavement section materials in accordance with UFC 3-200-10N, *Civil Engineering*.

2. **Traffic Control**: If the site work involves interference with normal vehicular and or pedestrian traffic, the Contractor shall coordinate with the authority having jurisdiction, propose and obtain approval for traffic control measures that may be required in performance of the work required by the contract.

3. **Performance Verification And Acceptance Testing**:
   a. **Subgrade Preparation:** If required by the Designer of Record, perform proof rolling. Proof rolling shall be performed in the presence of the Contracting Officer. Rutting or pumping of material shall be undercut as directed by the Contracting Officer and replaced with satisfactory soil materials as defined by the Geotechnical Engineer.
   b. **Base Course Performance Verification**: At a minimum, Contractor must perform visual performance verification. Surface shall be smooth with no ruts, sloped or crowned to not pond water.
   c. **Bituminous Concrete Pavement Performance Verification**: At a minimum, Contractor must perform visual performance verification. Finished surface shall be uniform in texture and appearance, free of defects such as cracks and creases, and be sloped or crowned so as to not pond water.
   d. **Portland Cement Concrete Pavement Performance Verification**: At a minimum, Contractor must perform visual performance verification. Finished surface shall be uniform in texture and appearance, free of defects such as cracks and spalls, and be sloped or crowned so as to not pond water.
   e. **Concrete Joint Performance Verification**: Joint sealer that fails to cure properly, or fails to bond to joint walls, or reverts to uncured state or fails in cohesion, or shows excessive air voids, blisters, or has surface defects, swells, or other deficiencies, or is not recessed within indicated tolerances shall be rejected. Remove rejected sealer, re-clean and reseal joints.

G2040 EXTERIOR FURNISHINGS

All site furnishings shall be permanently attached to concrete pads. Site furnishings shall conform to the Base Exterior Architecture Plan (BEAP) or Installation Appearance Plan (IAP) for each Activity. If no product guidance is given, coordinate material, finish and color with architecture (fiberglass and aluminum are not acceptable) and provide to the greatest extent possible, materials with industrial recycled content, preferably from regionally local manufacturers. At a minimum, provide a trash and ash receptacle at each entry and gathering/smoking area.

G2050 LANDSCAPING

G30 SITE CIVIL/MECHANICAL UTILITIES

Develop the site to provide water, fire protection, sanitary sewer, storm drainage, heating, cooling and fuel distribution services that meet the requirements of each utility provider and each applicable regulatory agency that governs and issues permits for the construction and operation of these systems. Site design shall also comply with Department of Defense requirements concerning Low Impact Development (LID) per UFC 3-210-10, as well as state or local stormwater management regulations, and applicable project sustainability goals. Submit sealed calculations with narrative to the Government for civil and environmental review documenting all assumptions and which criteria governs the design.

Coordinate with the local utility providers and pay any fees or charges required to connect to their utility. Identify and obtain all permits to comply with all federal, state, and local regulatory requirements associated with this work. Coordinate all reports, submittals, and permit applications through the Contracting Officer. The Contractor shall perform work in accordance with the obtained permits.

Provide all required fittings, connections and accessories required for a complete and usable system. All equipment shall be installed per the criteria indicated in this RFP and the manufacturer's recommendations. Where the word "should" is used in the manufacturer's recommendations, substitute the word "must".

G3010 WATER SUPPLY

1. **Water System Design and Construction**: Provide the new water system and connections to the existing water system in accordance with UFC 3-230-01, *Water Supply: Storage, Distribution, and Transmission*; the utility provider's requirements; or the state waterworks' regulations; whichever is more stringent.

2. **Notifications**: Notify the utility provider of the additional demand generated by the proposed facility. Provide a copy of all correspondence with the utility provider to the Government's Civil/Mechanical Reviewer.

3. **Performance Verification And Acceptance Testing**: Provide testing on water mains and service lines in accordance with the state waterworks' regulations and the following:

   a. Ductile iron and other materials: AWWA C600.

   b. PVC: AWWA C605.
   whichever is more stringent. Do not begin testing on any section of a pipeline where concrete thrust blocks have been provided until at least 5 days after placing of the concrete.

G3020 SANITARY SEWER

1. Sanitary System Design and Construction: Provide the new sanitary sewer system and connections to the existing sanitary sewer collection system in accordance with UFC 3-240-01, *Wastewater Collection*; the utility provider's requirements; or the state sewerage regulations; whichever is more stringent.

2. Notifications: Notify the utility provider of the additional wastewater flow generated by the proposed facility. Provide a copy of all correspondence with the utility provider to the Government Civil Reviewer.

3. Wastewater Pump Station: Where required, provide a duplex, grinder pump station in accordance with the utility provider's requirements. Provide pump station wet well of fiberglass construction. Provide adjacent valve vault of precast concrete construction.

   Provide automatic control to start and stop the pump system. Provide automatic level control by floats in accordance with the preferences of the system owner to fill and prevent overflow of the wet well. Provide an emergency pump connection.

   Provide a telephone dialer in the control panel capable of accepting up to 8 telephone numbers. At the control panel provide an alarm horn and light with battery backup. Alarms shall include high liquid wet well level; loss of main power; no flow as sensed by current sensor; and pump failure via overload or motor heat sensor trip. Provide seal failure indicator lights and elapsed time meters.

   Provide electrical connections for a portable emergency generator hook-up sized to start up and maintain the total rated running capacity of the station, including the pumps, controls, lighting, and other auxiliary equipment.

4. Performance Verification And Acceptance Testing:
   a. Sanitary Sewer Distribution System Performance Verification: Provide testing on sewer mains and laterals in accordance with the state sewerage regulations. At a minimum, perform the following:

      1) Visual Test: Remove manhole colvers and conducts a visual inspecation as follows:

         a) Inspect for visible leaks in lines or manholes.

         b) Inspect condition of grout in the interior joints of the manholes.

         c) Inspect manhole frames and covers for proper type and installation.

         d) Inspect to see if lines are free of debris.

         e) Inspect manhole benches and inverts.

         f) Check alignment and grade of gravity lines by laser or by introducing sufficient water into the line to verify the absence of sags, as directed by the Contracting Officer.

         g) Mirror test: Check each straight run of pipeline for gross deficiencies by holding a light in a manhole; it shall show a full circle of light through the pipeline when viewed from the adjoining end of line.

2) Leakage Tests: Test lines for leakage by either infiltration tests or exfiltration tests, or by low-pressure air tests in accordance with the following:

a) Exfiltration Tests: ASTM C 969M (ASTM C 969) and perform calculations in accordance with its Appendix.

b) Low-pressure Air Tests: Pipelines: ASTM C 924M (ASTM C 924) and perform calculations in accordance with its Appendix. PVC plastic pipelines: UBPPA UNI-B-6 and perform calculations in accordance with its Appendix.

3) Cross Connection Tests: Cross connection tests shall be observed by the Contracting Officer and the utility provider's inspector.

a) Perform a tracer study from the project sewer connection to the first manhole downstream on the active sewer system. Use a nontoxic, non-staining sewer tracing dye. Testing shall continue until the dye visually confirms the design connection is appropriate. During the test, the contractor shall monitor the storm drainage system (structures and outfalls) downstream from the project for any sign of cross connection.

b) Perform a smoke test on the project sewer to verify that project storm drainage inlets or drains have not been connected to the sanitary sewer.

f. Sanitary Sewer Manholes Verification Testing: Provide testing on sanitary sewer manholes in accordance with the state sewerage regulations. At minimum, perform hydraulic testing in accordance with ASTM C 969M (ASTM C 969).

g. Wastewater Pump Station Verification Testing: Test the wastewater pump station in accordance with the state sewerage regulations. Conduct testing on discharge piping and force main in accordance with tests for water distribution mains; see G30, paragraph 1.3.2. Test pumps, controls, and alarms, in operation, under design conditions to ensure proper operation of all equipment.

G3030 STORM SEWER

1. Storm System Design and Construction: Provide the new storm sewer system and connections to the existing storm sewer system in accordance with UFC 3-201-01, Civil Engineering; the utility provider's requirements; UFC 3-210-10, Low Impact Development; the state stormwater management laws and regulations; and applicable sustainability requirements; whichever is more stringent.The Contractor shall make necessary adjustments to the drainage design in order to avoid disruption to existing utilities and to protect existing trees to remain.Confirm that the existing receiving system has adequate capacity to receive the additional stormwater flow generated by the project.

2. Storm Sewer System Performance Verification: At a minimum, perform the following:
   a. Visual Test: Remove drainage structure covers and conduct a visual inspection as follows:

      1) Inspect for visible leaks in lines or structures.

      2) Inspect condition of grout in the interior joints of the structures.

      3) Inspect structure frames and covers for proper type and installation.

      4) Inspect to see if lines are free of debris.

      5) Inspect structure inverts.

      6) Check alignment and grade of gravity lines by laser or by introducing sufficient water into the line to verify the absence of sags, as directed by the Contracting Officer.

      7) Mirror test: Check each straight run of pipeline for gross deficiencies by holding a light in a structure; it shall show a full circle of light through the pipeline when viewed from the adjoining end of the line.

G3060 FUEL DISTRIBUTION

Gas Distribution System: Refer to Section D20 for requirements.

G40 SITE ELECTRICAL UTILITIES

G4010 ELECTRICAL DISTRIBUTION

1. **Electrical Utilities Design and Construction**: Site electrical utilities include all exterior electrical work, including the connection to the primary distribution system. This also includes telephone and cable television supplies.

   Provide electrical overhead and underground, distribution systems in accordance with IEEE C2 (National Electrical Safety Code), NFPA 70, local utilities company requirements, and local Activity guidelines.

2. **Coordination With Local Utilities Company and Local Activity**: Service meters for electrical services shall be provided and installed in conformance with the local utilities company requirements and local activity guidelines.

3. **Substations**: When secondary unit substations are required, the Designer of Record shall utilize UFGS Section 26 11 13, *Secondary Unit Substation*, and UFGS Section 26 23 00, *Switchboards and Switchgear*, for the project specification, and shall submit the edited specification section as a part of the design submittal for the project.

4. **Transformers**: When transformers are required, the Designer of Record shall utilize UFGS Section 26 12 19.10, *Three-Phase Pad Mounted Transformers*, UFGS Section 26 12 19.20, *Single-Phase Pad Mounted Transformers*, or UFGS Section 33 71 01, *Overhead Transmission and Distribution*, for the project specification, and shall submit the edited specification section as a part of the design submittal for the project.

5. **Switches, Controls and Devices**: When switches or control devices are required, the Designer of Record shall utilize UFGS Section 26 13 00.00 20, SF6 *Insulated Pad Mounted Switchgear*, or UFGS Section 33 71 01, *Overhead Transmission and Distribution*, for the project specification, and shall submit the edited specification section as a part of the design submittal for the project.

G4020 EXTERIOR LIGHTING FIXTURES AND CONTROLS

1. Utilize broad spectrum (white light) sources such as metal halide, induction, SSL, and fluorescent to provide good visibility at low light levels, unless lighting is required to match existing sources. The IESNA 10th Edition Handbook has developed a methodology to apply white light.

2. Comply with ANSI/ASHRAE/IES 90.1-2007 for all exterior lighting applications and controls.

3. Comply with EPACT 2005, the exterior lighting power density must be below ASHRAE by 30% if considered a building load and 20% if considered a non-building load.

4. Provide surge protective device (SPD) at panelboards that include circuits feeding exterior lighting systems.

5. Coordinate the design and luminaire selection with the landscape designer. Such coordination should include the location of poles which may conflict with tree locations.

6. When exterior lighting is required the designer of record shall utilize UFGS Section 26 51 00 for the project specification section as part of the design submittal for the project and shall submit the edited specification section as a part of the design submittal for the project. Provide “dark-sky” compliant exterior light fixtures and design to minimize light trespass and light pollution.

G4030 SITE COMMUNICATION & SECURITY

1. **Telephone Distribution System**: Provide all telephone distribution systems in accordance with EIA/TIA Standards, NFPA 70, and the cognizant telephone company requirements.

2. **Cable Television System**: Provide all cable television systems in accordance with NFPA 70, and the cognizant cable television company requirements and BICSI recommendations.

PART 5 – PRESCRIPTIVE SPECIFICATIONS

PERFORMANCE SPECIFICATIONS NOT FOUND IN UFGS STANDARD SPECIFICATIONS

SECTION 23 00 00 AIR SUPPLY, DISTRIBUTION, VENTILATION, AND EXHAUST SYSTEMS
SECTION 23 01 30.41 HVAC SYSTEM CLEANING
SECTION 23 05 93 TESTING, ADJUSTING, AND BALANCING FOR HVAC
SECTION 23 08 00.00 10 COMMISSIONING OF HVAC SYSTEMS
SECTION 23 09 33.00 40 ELECTRIC AND ELECTRONIC CONTROL SYSTEM FOR HVAC

This Page Intentionally Left Blank

SECTION 23 00 00

AIR SUPPLY, DISTRIBUTION, VENTILATION, AND EXHAUST SYSTEMS
08/10

PART 1 GENERAL

1.1 REFERENCES

The publications listed below form a part of this specification to the extent referenced. The publications are referred to within the text by the basic designation only.

ACOUSTICAL SOCIETY OF AMERICA (ASA)

ASA S12.51	(2012) Acoustics Determination of Sound Power Levels of Noise Sources using Sound Pressure Precision Method for Reverberation Rooms

AIR CONDITIONING CONTRACTORS OF AMERICA (ACCA)

ACCA Manual 4	(2001) Installation Techniques for Perimeter Heating and Cooling; 11th Edition

AIR MOVEMENT AND CONTROL ASSOCIATION INTERNATIONAL (AMCA)

AMCA 201	(2002; R 2011) Fans and Systems
AMCA 210	(2007) Laboratory Methods of Testing Fans for Aerodynamic Performance Rating
AMCA 300	(2008) Reverberant Room Method for Sound Testing of Fans
AMCA 301	(2014) Methods for Calculating Fan Sound Ratings from Laboratory Test Data

AIR-CONDITIONING, HEATING AND REFRIGERATION INSTITUTE (AHRI)

AHRI 260 I-P	(2012) Sound Rating of Ducted Air Moving and Conditioning Equipment
AHRI 350	(2008) Sound Rating of Non-Ducted Indoor Air-Conditioning Equipment
AHRI 410	(2001; Addendum 1 2002; Addendum 2 2005; Addendum 3 2011) Forced-Circulation Air-Cooling and Air-Heating Coils
AHRI 430	(2009) Central-Station Air-Handling Units
AHRI 440	(2008) Room Fan-Coils and Unit Ventilators
AHRI 880 I-P	(2011) Performance Rating of Air Terminals
AHRI 885	(2008; Addendum 2011) Procedure for

	Estimating Occupied Space Sound Levels in the Application of Air Terminals and Air Outlets
AHRI DCAACP	(Online) Directory of Certified Applied Air-Conditioning Products
AHRI Guideline D	(1996) Application and Installation of Central Station Air-Handling Units

AMERICAN BEARING MANUFACTURERS ASSOCIATION (ABMA)

ABMA 11	(2014) Load Ratings and Fatigue Life for Roller Bearings
ABMA 9	(1990; ERTA 2012; S 2013) Load Ratings and Fatigue Life for Ball Bearings

AMERICAN SOCIETY OF HEATING, REFRIGERATING AND AIR-CONDITIONING ENGINEERS (ASHRAE)

ASHRAE 52.2	(2012; Errata 2013; INT 1 2014) Method of Testing General Ventilation Air-Cleaning Devices for Removal Efficiency by Particle Size
ASHRAE 62.1	(2010; Errata 2011; INT 3 2012; INT 4 2012; INT 5 2013) Ventilation for Acceptable Indoor Air Quality
ASHRAE 68	(1997) Laboratory Method of Testing to Determine the Sound Power In a Duct
ASHRAE 70	(2006; R 2011) Method of Testing for Rating the Performance of Air Outlets and Inlets
ASHRAE 84	(2013; Addenda A 2013) Method of Testing Air-to-Air Heat Exchangers
ASHRAE 90.1 - IP	(2010; ERTA 2011-2013) Energy Standard for Buildings Except Low-Rise Residential Buildings

ASME INTERNATIONAL (ASME)

ASME A13.1	(2007; R 2013) Scheme for the Identification of Piping Systems

ASTM INTERNATIONAL (ASTM)

ASTM A123/A123M	(2013) Standard Specification for Zinc (Hot-Dip Galvanized) Coatings on Iron and Steel Products
ASTM A167	(2011) Standard Specification for Stainless and Heat-Resisting Chromium-Nickel Steel Plate, Sheet, and Strip

ASTM A53/A53M	(2012) Standard Specification for Pipe, Steel, Black and Hot-Dipped, Zinc-Coated, Welded and Seamless
ASTM A924/A924M	(2014) Standard Specification for General Requirements for Steel Sheet, Metallic-Coated by the Hot-Dip Process
ASTM B117	(2011) Standard Practice for Operating Salt Spray (Fog) Apparatus
ASTM B152/B152M	(2013) Standard Specification for Copper Sheet, Strip, Plate, and Rolled Bar
ASTM B209	(2014) Standard Specification for Aluminum and Aluminum-Alloy Sheet and Plate
ASTM B766	(1986; R 2008) Standard Specification for Electrodeposited Coatings of Cadmium
ASTM C1071	(2012) Standard Specification for Fibrous Glass Duct Lining Insulation (Thermal and Sound Absorbing Material)
ASTM C553	(2013) Standard Specification for Mineral Fiber Blanket Thermal Insulation for Commercial and Industrial Applications
ASTM C916	(2014) Standard Specification for Adhesives for Duct Thermal Insulation
ASTM D1654	(2008) Evaluation of Painted or Coated Specimens Subjected to Corrosive Environments
ASTM D1785	(2012) Standard Specification for Poly(Vinyl Chloride) (PVC), Plastic Pipe, Schedules 40, 80, and 120
ASTM D2466	(2013) Standard Specification for Poly(Vinyl Chloride) (PVC) Plastic Pipe Fittings, Schedule 40
ASTM D2564	(2012) Standard Specification for Solvent Cements for Poly(Vinyl Chloride) (PVC) Plastic Piping Systems
ASTM D2855	(1996; R 2010) Standard Practice for Making Solvent-Cemented Joints with Poly(Vinyl Chloride) (PVC) Pipe and Fittings
ASTM D3359	(2009; E 2010; R 2010) Measuring Adhesion by Tape Test
ASTM D520	(2000; R 2011) Zinc Dust Pigment
ASTM E2016	(2011) Standard Specification for

	Industrial Woven Wire Cloth
ASTM E84	(2014) Standard Test Method for Surface Burning Characteristics of Building Materials

NATIONAL ELECTRICAL MANUFACTURERS ASSOCIATION (NEMA)

NEMA ICS 6	(1993; R 2011) Enclosures
NEMA MG 1	(2011; Errata 2012) Motors and Generators
NEMA MG 10	(2013) Energy Management Guide for Selection and Use of Fixed Frequency Medium AC Squirrel-Cage Polyphase Induction Motors
NEMA MG 11	(1977; R 2012) Energy Management Guide for Selection and Use of Single Phase Motors

NATIONAL FIRE PROTECTION ASSOCIATION (NFPA)

NFPA 70	(2014; AMD 1 2013; Errata 1 2013; AMD 2 2013; Errata 2 2013; AMD 3 2014; Errata 3-4 2014; AMD 4-6 2014) National Electrical Code
NFPA 701	(2010) Standard Methods of Fire Tests for Flame Propagation of Textiles and Films
NFPA 90A	(2015) Standard for the Installation of Air Conditioning and Ventilating Systems
NFPA 96	(2014) Standard for Ventilation Control and Fire Protection of Commercial Cooking Operations

SHEET METAL AND AIR CONDITIONING CONTRACTORS' NATIONAL ASSOCIATION (SMACNA)

SMACNA 1403	(2008) Accepted Industry Practice for Industrial Duct Construction, 2nd Edition
SMACNA 1819	(2002) Fire, Smoke and Radiation Damper Installation Guide for HVAC Systems, 5th Edition
SMACNA 1884	(2003) Fibrous Glass Duct Construction Standards, 7th Edition
SMACNA 1966	(2005) HVAC Duct Construction Standards Metal and Flexible, 3rd Edition
SMACNA 1981	(2008) Seismic Restraint Manual Guidelines for Mechanical Systems, 3rd Edition

U.S. DEPARTMENT OF ENERGY (DOE)

PL-109-58	(1992; R 2005) Energy Efficient

U.S. NATIONAL ARCHIVES AND RECORDS ADMINISTRATION (NARA)

40 CFR 82	Protection of Stratospheric Ozone

UNDERWRITERS LABORATORIES (UL)

UL 181	(2013) Factory-Made Air Ducts and Air Connectors
UL 1995	(2011) Heating and Cooling Equipment
UL 555	(2006; Reprint May 2014) Standard for Fire Dampers
UL 555S	(2014) Smoke Dampers
UL 586	(2009; Reprint Sep 2014) Standard for High-Efficiency Particulate, Air Filter Units
UL 6	(2007; Reprint Nov 2014) Electrical Rigid Metal Conduit-Steel
UL 705	(2004; Reprint Dec 2013) Standard for Power Ventilators
UL 723	(2008; Reprint Aug 2013) Test for Surface Burning Characteristics of Building Materials
UL 900	(2004; Reprint Feb 2012) Standard for Air Filter Units
UL 94	(2013; Reprint Sep 2014) Standard for Tests for Flammability of Plastic Materials for Parts in Devices and Appliances
UL Bld Mat Dir	(2012) Building Materials Directory
UL Electrical Constructn	(2012) Electrical Construction Equipment Directory
UL Fire Resistance	(2012) Fire Resistance Directory

1.2 SYSTEM DESCRIPTION

Furnish ductwork, piping offsets, fittings, and accessories as required to provide a complete installation. Coordinate the work of the different trades to avoid interference between piping, equipment, structural, and electrical work. Provide complete, in place, all necessary offsets in piping and ductwork, and all fittings, and other components, required to install the work as indicated and specified.

1.2.1 Mechanical Equipment Identification

The number of charts and diagrams shall be equal to or greater than the

number of mechanical equipment rooms. Where more than one chart or diagram per space is required, mount these in edge pivoted, swinging leaf, extruded aluminum frame holders which open to 170 degrees.

1.2.1.1 Charts

Provide chart listing of equipment by designation numbers and capacities such as flow rates, pressure and temperature differences, heating and cooling capacities, horsepower, pipe sizes, and voltage and current characteristics.

1.2.1.2 Diagrams

Submit proposed diagrams, at least 2 weeks prior to start of related testing. provide neat mechanical drawings provided with extruded aluminum frame under 1/8-inch glass or laminated plastic, system diagrams that show the layout of equipment, piping, and ductwork, and typed condensed operation manuals explaining preventative maintenance procedures, methods of checking the system for normal, safe operation, and procedures for safely starting and stopping the system. After approval, post these items where directed.

1.2.2 Service Labeling

Label equipment, including fans, air handlers, terminal units, etc. with labels made of self-sticking, plastic film designed for permanent installation. Labels shall be in accordance with the typical examples below:

SERVICE	LABEL AND TAG DESIGNATION
Air handling unit Number	AHU -
Control and instrument air	CONTROL AND INSTR.
Exhaust Fan Number	EF -
VAV Box Number	VAV -
Fan Coil Unit Number	FC -
Terminal Box Number	TB -
Unit Ventilator Number	UV -

Identify similar services with different temperatures or pressures. Where pressures could exceed 125 pounds per square inch, gage, include the maximum system pressure in the label. Label and arrow piping in accordance with the following:

a. Each point of entry and exit of pipe passing through walls.

b. Each change in direction, i.e., elbows, tees.

c. In congested or hidden areas and at all access panels at each point

required to clarify service or indicated hazard.

d. In long straight runs, locate labels at distances within eyesight of each other not to exceed 75 feet. All labels shall be visible and legible from the primary service and operating area.

For Bare or Insulated Pipes	
for Outside Diameters of	Lettering
1/2 thru 1-3/8 inch	1/2 inch
1-1/2 thru 2-3/8 inch	3/4 inch
2-1/2 inch and larger	1-1/4 inch

1.2.3 Color Coding

Color coding of all piping systems shall be in accordance with ASME A13.1 .

1.3 SUBMITTALS

Government approval is required for submittals with a "G" designation; submittals not having a "G" designation are for information only. When used, a designation following the "G" designation identifies the office that will review the submittal for the Government. Submittals with an "S" are for inclusion in the Sustainability Notebook, in conformance to Section 01 33 29 SUSTAINABILITY REPORTING. Submit the following in accordance with Section 01 33 00 SUBMITTAL PROCEDURES:

SD-02 Shop Drawings

Detail Drawings; G

SD-03 Product Data

Metallic Flexible Duct
Insulated Nonmetallic Flexible Duct Runouts
Duct Connectors
Duct Access Doors; G
Fire Dampers
Manual Balancing Dampers; G
Automatic Smoke-Fire Dampers
Automatic Smoke Dampers
Sound Attenuation Equipment
Acoustical Duct Liner
Diffusers
Registers and Grilles
Louvers
Air Vents, Penthouses, and Goosenecks
Centrifugal Fans
In-Line Centrifugal Fans
Axial Flow Fans
Panel Type Power Wall Ventilators
Centrifugal Type Power Wall Ventilators
Centrifugal Type Power Roof Ventilators
Propeller Type Power Roof Ventilators
Air-Curtain Fans

Ceiling Exhaust Fans
Air Handling Units; G
Room Fan-Coil Units; G
Coil Induction Units; G
Constant Volume, Single Duct Terminal Units; G
Variable Volume, Single Duct Terminal Units; G
Variable Volume, Single Duct, Fan-Powered Terminal Units; G
Dual Duct Terminal Units; G
Ceiling Induction Terminal Units; G
Reheat Units; G
Unit Ventilators
Energy Recovery Devices; G
Test Procedures
Diagrams; G

SD-06 Test Reports

Performance Tests; G
Damper Acceptance Test; G

SD-07 Certificates

Bolts

SD-08 Manufacturer's Instructions

Manufacturer's Installation Instructions
Operation and Maintenance Training

SD-10 Operation and Maintenance Data

Operation and Maintenance Manuals; G

Fire Dampers; G
Manual Balancing Dampers; G
Automatic Smoke-Fire Dampers; G
Automatic Smoke Dampers; G
Centrifugal Fans; G
In-Line Centrifugal Fans; G
Axial Flow Fans; G
Panel Type Power Wall Ventilators; G
Centrifugal Type Power Wall Ventilators; G
Centrifugal Type Power Roof Ventilators; G
Propeller Type Power Roof Ventilators; G
Air-Curtain Fans; G
Ceiling Exhaust Fans; G
Air Handling Units; G
Room Fan-Coil Units; G
Coil Induction Units; G
Constant Volume, Single Duct Terminal Units; G
Variable Volume, Single Duct Terminal Units; G
Variable Volume, Single Duct, Fan-Powered Terminal Units; G
Dual Duct Terminal Units; G
Ceiling Induction Terminal Units; G
Reheat Units; G
Unit Ventilators; G
Energy Recovery Devices; G

1.4 QUALITY ASSURANCE

Except as otherwise specified, approval of materials and equipment is based on manufacturer's published data.

a. Where materials and equipment are specified to conform to the standards of the Underwriters Laboratories, the label of or listing with reexamination in UL Bld Mat Dir, and UL 6 is acceptable as sufficient evidence that the items conform to Underwriters Laboratories requirements. In lieu of such label or listing, submit a written certificate from any nationally recognized testing agency, adequately equipped and competent to perform such services, stating that the items have been tested and that the units conform to the specified requirements. Outline methods of testing used by the specified agencies.

b. Where materials or equipment are specified to be constructed or tested, or both, in accordance with the standards of the ASTM International (ASTM), the ASME International (ASME), or other standards, a manufacturer's certificate of compliance of each item is acceptable as proof of compliance.

c. Conformance to such agency requirements does not relieve the item from compliance with other requirements of these specifications.

d. Where products are specified to meet or exceed the specified energy efficiency requirement of FEMP-designated or ENERGY STAR coveed product categories, equipment selected shall have as a minimum the efficiency rating identified under "Energy-Efficient Products" at http://www1.eere.energy.gov/femp/procurement.

   These specifications conform to the efficiency requirements as defined in Public Law PL-109-58, "Energy Policy Act of 2005" for federal procurement of energy-efficient products. Equipment having a lower efficiency than ENERGY STAR or FEMP requirements may be specified if the designer determines the equipment to be more life-cycle cost effective using the life-cycle cost analysis methodology and procedure in 10 CFR 436.

1.4.1 Prevention of Corrosion

Protect metallic materials against corrosion. Manufacturer shall provide rust-inhibiting treatment and standard finish for the equipment enclosures. Do not use aluminum in contact with earth, and where connected to dissimilar metal. Protect aluminum by approved fittings, barrier material, or treatment. Ferrous parts such as anchors, bolts, braces, boxes, bodies, clamps, fittings, guards, nuts, pins, rods, shims, thimbles, washers, and miscellaneous parts not of corrosion-resistant steel or nonferrous materials shall be hot-dip galvanized in accordance with ASTM A123/A123M for exterior locations and cadmium-plated in conformance with ASTM B766 for interior locations.

1.4.2 Asbestos Prohibition

Do not use asbestos and asbestos-containing products.

1.4.3 Ozone Depleting Substances Used as Refrigerants

Minimize releases of Ozone Depleting Substances (ODS) during repair,

maintenance, servicing or disposal of appliances containing ODS's by complying with all applicable sections of 40 CFR 82 Part 82 Subpart F. Any person conducting repair, maintenance, servicing or disposal of appliances owned by NASA shall comply with the following:

a. Do not knowingly vent or otherwise release into the environment, Class I or Class II substances used as a refrigerant.

b. Do not open appliances without meeting the requirements of 40 CFR 82 Part 82.156 Subpart F, regarding required practices for evacuation and collection of refrigerant, and 40 CFR 82 Part 82.158 Subpart F, regarding standards of recycling and recovery equipment.

c. Only persons who comply with 40 CFR 82 Part 82.161 Subpart F, regarding technician certification, can conduct work on appliances containing refrigerant.

In addition, provide copies of all applicable certifications to the Contracting Officer at least 14 calendar days prior to initiating maintenance, repair, servicing, dismantling or disposal of appliances, including:

a. Proof of Technician Certification

b. Proof of Equipment Certification for recovery or recycling equipment.

c. Proof of availability of certified recovery or recycling equipment.

1.4.4 Use of Ozone Depleting Substances, Other than Refrigerants

The use of Class I or Class II ODS's listed as nonessential in 40 CFR 82 Part 82.66 Subpart C is prohibited. These prohibited materials and uses include:

a. Any plastic party spray streamer or noise horn which is propelled by a chlorofluorocarbon

b. Any cleaning fluid for electronic and photographic equipment which contains a chlorofluorocarbon; including liquid packaging, solvent wipes, solvent sprays, and gas sprays.

c. Any plastic flexible or packaging foam product which is manufactured with or contains a chlorofluorocarbon, including, open cell foam, open cell rigid polyurethane poured foam, closed cell extruded polystyrene sheet foam, closed cell polyethylene foam and closed cell polypropylene foam except for flexible or packaging foam used in coaxial cabling.

d. Any aerosol product or other pressurized dispenser which contains a chlorofluorocarbon, except for those listed in 40 CFR 82 Part 82.66 Subpart C.

Request a waiver if a facility requirement dictates that a prohibited material is necessary to achieve project goals. Submit the waiver request in writing to the Contracting Officer. The waiver will be evaluated and dispositioned.

1.4.5 Detail Drawings

Submit detail drawings showing equipment layout, including assembly and

installation details and electrical connection diagrams; ductwork layout showing the location of all supports and hangers, typical hanger details, gauge reinforcement, reinforcement spacing rigidity classification, and static pressure and seal classifications. Include any information required to demonstrate that the system has been coordinated and functions properly as a unit on the drawings and show equipment relationship to other parts of the work, including clearances required for operation and maintenance. Submit drawings showing bolt-setting information, and foundation bolts prior to concrete foundation construction for all equipment indicated or required to have concrete foundations. Submit function designation of the equipment and any other requirements specified throughout this Section with the shop drawings.

1.5 DELIVERY, STORAGE, AND HANDLING

Protect stored equipment at the jobsite from the weather, humidity and temperature variations, dirt and dust, or other contaminants. Additionally, cap or plug all pipes until installed.

PART 2 PRODUCTS

2.1 STANDARD PRODUCTS

Except for the fabricated duct, plenums and casings specified in paragraphs "Metal Ductwork" and "Plenums and Casings for Field-Fabricated Units", provide components and equipment that are standard products of manufacturers regularly engaged in the manufacturing of products that are of a similar material, design and workmanship. This requirement applies to all equipment, including diffusers, registers, fire dampers, and balancing dampers.

a. Standard products are defined as components and equipment that have been in satisfactory commercial or industrial use in similar applications of similar size for at least two years before bid opening.

b. Prior to this two year period, these standard products shall have been sold on the commercial market using advertisements in manufacturers' catalogs or brochures. These manufacturers' catalogs, or brochures shall have been copyrighted documents or have been identified with a manufacturer's document number.

c. Provide equipment items that are supported by a service organization. In product categories covered by ENERGY STAR or the Federal Energy Management Program, provide equipment that is listed on the ENERGY STAR Qualified Products List or that meets or exceeds the FEMP-designated Efficiency Requirements.

2.2 IDENTIFICATION PLATES

In addition to standard manufacturer's identification plates, provide engraved laminated phenolic identification plates for each piece of mechanical equipment. Identification plates are to designate the function of the equipment. Submit designation with the shop drawings. Identification plates shall be three layers, black-white-black, engraved to show white letters on black background. Letters shall be upper case. Identification plates 1-1/2-inches high and smaller shall be 1/16-inch thick, with engraved lettering 1/8-inch high; identification plates larger than 1-1/2-inches high shall be 1/8-inch thick, with engraved lettering of suitable height. Identification plates 1-1/2-inches high and larger shall

have beveled edges. Install identification plates using a compatible adhesive.

2.3 EQUIPMENT GUARDS AND ACCESS

Fully enclose or guard belts, pulleys, chains, gears, couplings, projecting setscrews, keys, and other rotating parts exposed to personnel contact according to OSHA requirements. Properly guard or cover with insulation of a type specified, high temperature equipment and piping exposed to contact by personnel or where it creates a potential fire hazard. The requirements for catwalks, operating platforms, ladders, and guardrails are specified in Section 05 50 13 MISCELLANEOUS METAL FABRICATIONS.

2.4 ELECTRICAL WORK

a. Provide motors, controllers, integral disconnects, contactors, and controls with their respective pieces of equipment, except controllers indicated as part of motor control centers. Provide electrical equipment, including motors and wiring, as specified in Section 26 20 00 INTERIOR DISTRIBUTION SYSTEM. Provide manual or automatic control and protective or signal devices required for the operation specified and control wiring required for controls and devices specified, but not shown. For packaged equipment, include manufacturer provided controllers with the required monitors and timed restart.

b. For single-phase motors, provide high-efficiency type, fractional-horsepower alternating-current motors, including motors that are part of a system, in accordance with NEMA MG 11. Integral size motors shall be the premium efficiency type in accordance with NEMA MG 1.

c. For polyphase motors, provide squirrel-cage medium induction motors, including motors that are part of a system , and that meet the efficiency ratings for premium efficiency motors in accordance with NEMA MG 1. Select premium efficiency polyphase motors in accordance with NEMA MG 10.

d. Provide motors in accordance with NEMA MG 1 and of sufficient size to drive the load at the specified capacity without exceeding the nameplate rating of the motor. Provide motors rated for continuous duty with the enclosure specified. Provide motor duty that allows for maximum frequency start-stop operation and minimum encountered interval between start and stop. Provide motor torque capable of accelerating the connected load within 20 seconds with 80 percent of the rated voltage maintained at motor terminals during one starting period. Provide motor starters complete with thermal overload protection and other necessary appurtenances. Fit motor bearings with grease supply fittings and grease relief to outside of the enclosure.

e. Provide variable frequency drives for motors as specified in Section 26 29 23 VARIABLE FREQUENCY DRIVE SYSTEMS UNDER 600 VOLTS.

2.5 ANCHOR BOLTS

Provide anchor bolts for equipment placed on concrete equipment pads or on concrete slabs. Bolts to be of the size and number recommended by the equipment manufacturer and located by means of suitable templates. Installation of anchor bolts shall not degrade the surrounding concrete.

2.6 SEISMIC ANCHORAGE

Anchor equipment in accordance with applicable seismic criteria for the area and as defined in SMACNA 1981

2.7 PAINTING

Paint equipment units in accordance with approved equipment manufacturer's standards unless specified otherwise. Field retouch only if approved. Otherwise, return equipment to the factory for refinishing.

2.8 INDOOR AIR QUALITY

Provide equipment and components that comply with the requirements of ASHRAE 62.1 unless more stringent requirements are specified herein.

2.9 DUCT SYSTEMS

2.9.1 Metal Ductwork

Provide metal ductwork construction, including all fittings and components, that complies with SMACNA 1966, as supplemented and modified by this specification .

a. Ductwork shall be constructed meeting the requirements for the duct system static pressure specified in APPENDIX D of Section 23 05 93 TESTING, ADJUSTING AND BALANCING FOR HVAC.

b. Provide radius type elbows with a centerline radius of 1.5 times the width or diameter of the duct where space permits. Otherwise, elbows having a minimum radius equal to the width or diameter of the duct or square elbows with factory fabricated turning vanes are allowed.

c. Provide ductwork that meets the requirements of Seal Class A. Provide ductwork in VAV systems upstream of the VAV boxes that meets the requirements of Seal Class A.

d. Provide sealants that conform to fire hazard classification specified in Section 23 07 00 THERMAL INSULATION FOR MECHANICAL SYSTEMS and are suitable for the range of air distribution and ambient temperatures to which it is exposed. Do not use pressure sensitive tape as a sealant.

e. Make spiral lock seam duct, and flat oval with duct sealant and lock with not less than 3 equally spaced drive screws or other approved methods indicated in SMACNA 1966. Apply the sealant to the exposed male part of the fitting collar so that the sealer is on the inside of the joint and fully protected by the metal of the duct fitting. Apply one brush coat of the sealant over the outside of the joint to at least 2 inch band width covering all screw heads and joint gap. Dents in the male portion of the slip fitting collar are not acceptable. Fabricate outdoor air intake ducts and plenums with watertight soldered or brazed joints and seams.

2.9.1.1 Metallic Flexible Duct

a. Provide duct that conforms to UL 181 and NFPA 90A with factory-applied insulation, vapor barrier, and end connections. Provide duct assembly

that does not exceed 25 for flame spread and 50 for smoke developed. Provide ducts designed for working pressures of 2 inches water gauge positive and 1.5 inches water gauge negative. Provide flexible round duct length that does not exceed 5 feet. Secure connections by applying adhesive for 2 inches over rigid duct, apply flexible duct 2 inches over rigid duct, apply metal clamp, and provide minimum of three No. 8 sheet metal screws through clamp and rigid duct.

b. Inner duct core: Provide interlocking spiral or helically corrugated flexible core constructed of zinc-coated steel, aluminum, or stainless steel; or constructed of inner liner of continuous galvanized spring steel wire helix fused to continuous, fire-retardant, flexible vapor barrier film, inner duct core.

c. Insulation: Provide inner duct core that is insulated with mineral fiber blanket type flexible insulation, minimum of 1 inch thick. Provide insulation covered on exterior with manufacturer's standard fire retardant vapor barrier jacket for flexible round duct.

2.9.1.2 Insulated Nonmetallic Flexible Duct Runouts

Use flexible duct runouts only where indicated. Runout length is indicated on the drawings, and is not to exceed 5 feet. Provide runouts that are preinsulated, factory fabricated, and that comply with NFPA 90A and UL 181. Provide either field or factory applied vapor barrier. Provide not less than 20 ounce glass fabric duct connectors coated on both sides with neoprene. Where coil induction or high velocity units are supplied with vertical air inlets, use a streamlined, vaned and mitered elbow transition piece for connection to the flexible duct or hose. Provide a die-stamped elbow and not a flexible connector as the last elbow to these units other than the vertical air inlet type. Insulated flexible connectors are allowed as runouts. Provide insulated material and vapor barrier that conform to the requirements of Section 23 07 00 THERMAL INSULATION FOR MECHANICAL SYSTEMS. Do not expose the insulation material surface to the air stream.

2.9.1.3 General Service Duct Connectors

Provide a flexible duct connector approximately 6 inches in width where sheet metal connections are made to fans or where ducts of dissimilar metals are connected. For round/oval ducts, secure the flexible material by stainless steel or zinc-coated, iron clinch-type draw bands. For rectangular ducts, install the flexible material locked to metal collars using normal duct construction methods. Provide a composite connector system that complies with NFPA 701 and is classified as "flame-retardent fabrics" in UL Bld Mat Dir.

2.9.1.4 High Temperature Service Duct Connections

Provide material that is approximately 3/32 inch thick, 35 to 40-ounce per square yard weight, plain weave fibrous glass cloth with, nickel/chrome wire reinforcement for service in excess of 1200 degrees F.

2.9.1.5 Aluminum Ducts

ASTM B209, alloy 3003-H14 for aluminum sheet and alloy 6061-T6 or equivalent strength for aluminum connectors and bar stock.

2.9.1.6 Copper Sheets

ASTM B152/B152M, light cold rolled temper.

2.9.1.7 Corrosion Resisting (Stainless) Steel Sheets

ASTM A167

2.9.2 Duct Access Doors

Provide hinged access doors conforming to SMACNA 1966 in ductwork and plenums where indicated and at all air flow measuring primaries, automatic dampers, fire dampers, coils, thermostats, and other apparatus requiring service and inspection in the duct system. Provide access doors upstream and downstream of air flow measuring primaries and heating and cooling coils. Provide doors that are a minimum 15 by 18 inches, unless otherwise shown. Where duct size does not accommodate this size door, make the doors as large as practicable. Equip doors 24 by 24 inches or larger with fasteners operable from inside and outside the duct. Use insulated type doors in insulated ducts.

2.9.3 Fire Dampers

Use 1.5 hour rated fire dampers unless otherwise indicated. Provide fire dampers that conform to the requirements of NFPA 90A and UL 555. Perform the fire damper test as outlined in NFPA 90A. Provide a pressure relief door upstream of the fire damper. If the ductwork connected to the fire damper is to be insulated then provide a factory installed pressure relief damper. Provide automatic operating fire dampers with a dynamic rating suitable for the maximum air velocity and pressure differential to which it is subjected. Provide fire dampers approved for the specific application, and install according to their listing. Equip fire dampers with a steel sleeve or adequately sized frame installed in such a manner that disruption of the attached ductwork, if any, does not impair the operation of the damper. Equip sleeves or frames with perimeter mounting angles attached on both sides of the wall or floor opening. Construct ductwork in fire-rated floor-ceiling or roof-ceiling assembly systems with air ducts that pierce the ceiling of the assemblies in conformance with UL Fire Resistance. Provide curtain type with damper blades in the air stream out of the air stream or single blade type or multi-blade type fire dampers. Install dampers that do not reduce the duct or the air transfer opening cross-sectional area. Install dampers so that the centerline of the damper depth or thickness is located in the centerline of the wall, partition or floor slab depth or thickness. Unless otherwise indicated, comply with the installation details given in SMACNA 1819 and in manufacturer's instructions for fire dampers. Perform acceptance testing of fire dampers according to paragraph Fire Damper Acceptance Test and NFPA 90A.

2.9.4 Manual Balancing Dampers

a. Furnish manual balancing dampers with accessible operating mechanisms. Use chromium plated operators (with all exposed edges rounded) in finished portions of the building. Provide manual volume control dampers that are operated by locking-type quadrant operators.

b. Unless otherwise indicated, provide opposed blade type multileaf dampers with maximum blade width of 12 inches. Provide access doors or panels for all concealed damper operators and locking setscrews. Provide access doors or panels in hard ceilings, partitions and walls

for access to all concealed damper operators and damper locking setscrews. Coordinate location of doors or panels with other affected contractors.

c. Provide stand-off mounting brackets, bases, or adapters not less than the thickness of the insulation when the locking-type quadrant operators for dampers are installed on ducts to be thermally insulated, to provide clearance between the duct surface and the operator. Stand-off mounting items shall be integral with the operator or standard accessory of the damper manufacturer.

2.9.4.1 Square or Rectangular Dampers

2.9.4.1.1 Duct Height 12 inches and Less

2.9.4.1.1.1 Frames

Width	Height	Galvanized Steel Thickness	Length
Maximum 19 inches	Maximum 12 inches	Minimum 20 gauge	Minimum 3 inches
More than 19 inches	Maximum 12 inches	Minimum 16 gauge	Minimum 3 inches

2.9.4.1.1.2 Single Leaf Blades

Width	Height	Galvanized Steel Thickness	Length
Maximum 19 inches	Maximum 12 inches	Minimum 20 gauge	Minimum 3 inches
More than 19 inches	Maximum 12 inches	Minimum 16 gauge	Minimum 3 inches

2.9.4.1.1.3 Blade Axles

To support the blades of round dampers, provide galvanized steel shafts supporting the blade the entire duct diameter frame-to-frame. Axle shafts shall extend through standoff bracket and hand quadrant.

Width	Height	Material	Square Shaft
Maximum 19 inches	Maximum 12 inches	Galvanized Steel	Minimum 3/8 inch
More than 19 inches	Maximum 12 inches	Galvanized Steel	Minimum 1/2 inch

2.9.4.1.1.4 Axle Bearings

Support the shaft on each end at the frames with shaft bearings. Shaft bearings configuration shall be a pressed fit to provide a tight joint between blade shaft and damper frame.

Width	Height	Material
Maximum 19 inches	Maximum 12 inches	solid nylon, or equivalent solid plastic, or oil-impregnated bronze
More than 19 inches	Maximum 12 inches	oil-impregnated bronze

2.9.4.1.1.5 Control Shaft/Hand Quadrant

Provide dampers with accessible locking-type control shaft/hand quadrant operators.

Provide stand-off mounting brackets, bases, or adapters for the locking-type quadrant operators on dampers installed on ducts to be thermally insulated. Stand-off distance shall be a minimum of 2 inches off the metal duct surface. Stand-off mounting items shall be integral with the operator or standard accessory of the damper manufacturer.

2.9.4.1.1.6 Finish

Mill Galvanized

2.9.4.1.2 Duct Height Greater than 12 inches

2.9.4.1.2.1 Dampers

Provide dampers with multi-leaf opposed-type blades.

2.9.4.1.2.2 Frames

Maximum 48 inches in height; maximum 48 inches in width; minimum of 16 gauge galvanized steel,
minimum of 5 inches long.

2.9.4.1.2.3 Blades

Minimum of 16 gauge galvanized steel; 6 inch nominal width.

2.9.4.1.2.4 Blade Axles

To support the blades of round dampers, provide galvanized square steel shafts supporting the blade the entire duct diameter frame-to-frame. Axle shafts shall extend through standoff bracket and hand quadrant.

2.9.4.1.2.5 Axle Bearings

Support the shaft on each end at the frames with shaft bearings constructed of oil-impregnated bronze, or solid nylon, or a solid plastic equivalent to nylon. Shaft bearings configuration shall be a pressed fit to provide a tight joint between blade shaft and damper frame.

2.9.4.1.2.6 Blade Actuator

Minimum 1/2 inch diameter galvanized steel.

2.9.4.1.2.7 Blade Actuator Linkage

Mill Galvanized steel bar and crank plate with stainless steel pivots.

2.9.4.1.2.8 Control Shaft/Hand Quadrant

Provide dampers with accessible locking-type control shaft/hand quadrant operators.

Provide stand-off mounting brackets, bases, or adapters for the locking-type quadrant operators on dampers installed on ducts to be thermally insulated. Stand-off distance shall be a minimum of 2 inches off the metal duct surface. Stand-off mounting items shall be integral with the operator or standard accessory of the damper manufacturer.

2.9.4.1.2.9 Finish

Mill Galvanized

2.9.4.2 Round Dampers

2.9.4.2.1 Frames

Size	Galvanized Steel Thickness	Length
4 to 20 inches	Minimum 20 gauge	Minimum 6 inches
22 to 30 inches	Minimum 20 gauge	Minimum 10 inches
32 to 40 inches	Minimum 16 gauge	Minimum 10 inches

2.9.4.2.2 Blades

Size	Galvanized Steel Thickness
4 to 20 inches	Minimum 20 gauge
22 to 30 inches	Minimum 16 gauge
32 to 40 inches	Minimum 10 gauge

2.9.4.2.3 Blade Axles

To support the blades of round dampers, provide galvanized steel shafts supporting the blade the entire duct diameter frame-to-frame. Axle shafts shall extend through standoff bracket and hand quadrant.

Size	Shaft Size and Shape
4 to 20 inches	Minimum 3/8 inch square
22 to 30 inches	Minimum 1/2 inch square
32 to 40 inches	Minimum 3/4 inch square

2.9.4.2.4 Axle Bearings

Support the shaft on each end at the frames with shaft bearings constructed of oil-impregnated bronze, or solid nylon, or a solid plastic equivalent to nylon. Shaft bearings configuration shall be a pressed fit to provide a tight joint between blade shaft and damper frame.

Size	Material
4 to 20 inches	solid nylon, or equivalent solid plastic, or oil-impregnated bronze
22 to 30 inches	solid nylon, or equivalent solid plastic, or oil-impregnated bronze
32 to 40 inches	oil-impregnated bronze, or stainless steel sleeve bearing

2.9.4.2.5 Control Shaft/Hand Quadrant

Provide dampers with accessible locking-type control shaft/hand quadrant operators.

Provide stand-off mounting brackets, bases, or adapters for the locking-type quadrant operators on dampers installed on ducts to be thermally insulated. Stand-off distance shall be a minimum of 2 inches off the metal duct surface. Stand-off mounting items shall be integral with the operator or standard accessory of the damper manufacturer.

2.9.4.2.6 Finish

Mill Galvanized

2.9.5 Automatic Balancing Dampers

Provide dampers as specified in paragraph SUPPLEMENTAL COMPONENTS/SERVICES, subparagraph CONTROLS.

2.9.6 Automatic Smoke-Fire Dampers

Multiple blade type, 180 degrees F fusible fire damper link; smoke damper assembly to include electric damper operator. UL 555 as a 1.5 hour rated fire damper; further qualified under UL 555S as a leakage rated damper. Provide a leakage rating under UL 555S that is no higher than Class II at an elevated temperature Category B (250 degrees F for 30 minutes). Ensure that pressure drop in the damper open position does not exceed 0.1 inch water gauge with average duct velocities of 2500 fpm.

2.9.7 Automatic Smoke Dampers

UL listed multiple blade type, supplied by smoke damper manufacturer, with electric damper operator as part of assembly. Qualified under UL 555S with a leakage rating no higher than Class II or III at an elevated temperature Category B (250 degrees F for 30 minutes). Ensure that pressure drop in the damper open position does not exceed 0.1 inch water gauge with average duct velocities of 2500 fpm.

2.9.8 Plenums and Casings for Field-Fabricated Units

2.9.8.1 Plenum and Casings

Fabricate and erect plenums and casings as shown in SMACNA 1966, as applicable. Construct system casing of not less than 16 gauge galvanized sheet steel. Furnish cooling coil drain pans with 1 inch threaded outlet to collect condensation from the cooling coils. Fabricate drain pans from not lighter than 16 gauge steel, galvanized after fabrication or of 18 gauge corrosion-resisting sheet steel conforming to ASTM A167, Type 304, welded and stiffened. Thermally insulate drain pans exposed to the atmosphere to prevent condensation. Coat insulation with a flame resistant waterproofing material. Provide separate drain pans for each vertical coil section, and a separate drain line for each pan. Size pans to ensure capture of entrained moisture on the downstream-air side of the coil. Seal openings in the casing, such as for piping connections, to prevent air leakage. Size the water seal for the drain to maintain a pressure of at least 2 inch water gauge greater than the maximum negative pressure in the coil space.

2.9.8.2 Casing

Terminate casings at the curb line and bolt each to the curb using galvanized angle, as indicated in SMACNA 1966.

2.9.8.3 Access Doors

Provide access doors in each section of the casing. Weld doorframes in place, gasket each door with neoprene, hinge with minimum of two brass hinges, and fasten with a minimum of two brass tension fasteners operable from inside and outside of the casing. Where possible, make doors 36 by 18 inches and locate them 18 inches above the floor. Where the space available does not accommodate doors of this size, use doors as large as the space accommodates. Swing doors so that fan suction or pressure holds doors in closed position, airtight. Provide a push-button station, located inside the casing, to stop the supply.

2.9.8.4 Factory-Fabricated Insulated Sheet Metal Panels

Factory-fabricated components are allowed for field-assembled units, provided all requirements specified for field-fabricated plenums and casings are met. Provide panels of modular design, pretested for structural strength, thermal control, condensation control, and acoustical control. Seal and insulate panel joints. Provide and gasket access doors to prevent air leakage. Provide panel construction that is not less than 20 gauge galvanized sheet steel, assembled with fasteners treated against corrosion. Provide standard length panels that deflect not more than 1/2 inch under operation. Construct details, including joint sealing, not specifically covered, as indicated in SMACNA 1966. Construct the plenums and casings to withstand the specified internal pressure of the air systems.

2.9.8.5 Duct Liner

Unless otherwise specified, duct liner is not permitted.

2.9.9 Sound Attenuation Equipment

2.9.9.1 Systems with total pressure above 4 Inches Water Gauge

Provide sound attenuators on the discharge duct of each fan operating at a total pressure above 4 inch water gauge, and, when indicated, at the intake of each fan system. Provide sound attenuators elsewhere as indicated. Provide factory fabricated sound attenuators, tested by an independent laboratory for sound and performance characteristics. Provide a net sound reduction as indicated. Maximum permissible pressure drop is not to exceed 0.63 inch water gauge. Construct traps to be airtight when operating under an internal static pressure of 10 inch water gauge. Provide air-side surface capable of withstanding air velocity of 10,000 fpm. Certify that the equipment can obtain the sound reduction values specified after the equipment is installed in the system and coordinated with the sound information of the system fan to be provided. Provide sound absorbing material conforming to ASTM C1071, Type I or II. Provide sound absorbing material that meets the fire hazard rating requirements for insulation specified in Section 23 07 00 THERMAL INSULATION FOR MECHANICAL SYSTEMS. For connection to ductwork, provide a duct transition section. Factory fabricated double-walled internally insulated spiral lock seam and round duct and fittings designed for high pressure air system can be provided if complying with requirements specified for factory fabricated sound attenuators, in lieu of factory fabricated sound attenuators. Construct the double-walled duct and fittings from an outer metal pressure shell of zinc-coated steel sheet, 1 inch thick acoustical blanket insulation, and an internal perforated zinc-coated metal liner. Provide a sufficient length of run to obtain the noise reduction coefficient specified. Certify that the sound reduction value specified can be obtained within the length of duct run provided. Provide welded or spiral lock seams on the outer sheet metal of the double-walled duct to prevent water vapor penetration. Provide duct and fittings with an outer sheet that conforms to the metal thickness of high-pressure spiral and round ducts and fittings shown in SMACNA 1966. Provide acoustical insulation with a thermal conductivity "k" of not more than 0.27 Btu/inch/square foot/hour/degree F at 75 degrees F mean temperature. Provide an internal perforated zinc-coated metal liner that is not less than 24 gauge with perforations not larger than 1/4 inch in diameter providing a net open area not less than 10 percent of the surface.

2.9.9.2 System with total pressure of 4 Inch Water Gauge and Lower

Use sound attenuators only where indicated. Provide factory fabricated sound attenuators that are constructed of galvanized steel sheets. Provide attenuator with outer casing that is not less than 22 gauge. Provide fibrous glass acoustical fill. Provide net sound reduction indicated. Obtain values on a test unit not less than 24 by 24 inches outside dimensions made by a certified nationally recognized independent acoustical laboratory. Provide air flow capacity as indicated or required. Provide pressure drop through the attenuator that does not exceed the value indicated, or that is not in excess of 15 percent of the total external static pressure of the air handling system, whichever is less. Acoustically test attenuators with metal duct inlet and outlet sections while under the rated air flow conditions. Include with the noise

reduction data the effects of flanking paths and vibration transmission. Construct sound attenuators to be airtight when operating at the internal static pressure indicated or specified for the duct system, but in no case less than 2 inch water gauge.

2.9.9.3 Acoustical Duct Liner

Use fibrous glass designed or flexible elastomeric duct liner for lining ductwork and conforming to the requirements of ASTM C1071, Type I and II. Provide uniform density, graduated density, or dual density liner composition, as standard with the manufacturer. Provide not less than 1 inch thick coated lining. Where acoustical duct liner is used, provide the thermal equivalent of the insulation specified in Section 23 07 00 THERMAL INSULATION FOR MECHANICAL SYSTEMS for liner or combination of liner and insulation applied to the exterior of the ductwork. Increase duct sizes shown to compensate for the thickness of the lining used. In lieu of sheet metal duct with field-applied acoustical lining, provide acoustically equivalent lengths of fibrous glass duct, elastomeric duct liner or factory fabricated double-walled internally insulated duct with perforated liner.

2.9.10 Diffusers, Registers, and Grilles

Provide factory-fabricated units of corrosion-resistant steel that distribute the specified quantity of air evenly over space intended without causing noticeable drafts, air movement faster than 50 fpm in occupied zone, or dead spots anywhere in the conditioned area. Provide outlets for diffusion, spread, throw, and noise level as required for specified performance. Certify performance according to ASHRAE 70. Provide sound rated and certified inlets and outlets according to ASHRAE 70. Provide sound power level as indicated. Provide diffusers and registers with volume damper with accessible operator, unless otherwise indicated; or if standard with the manufacturer, an automatically controlled device is acceptable. Provide opposed blade type volume dampers for all diffusers and registers, except linear slot diffusers. Provide linear slot diffusers with round or elliptical balancing dampers. Where the inlet and outlet openings are located less than 7 feet above the floor, protect them by a grille or screen according to NFPA 90A.

2.9.10.1 Diffusers

Provide diffuser types indicated. Furnish ceiling mounted units with anti-smudge devices, unless the diffuser unit minimizes ceiling smudging through design features. Provide diffusers with air deflectors of the type indicated. Provide air handling troffers or combination light and ceiling diffusers conforming to the requirements of UL Electrical Constructn for the interchangeable use as cooled or heated air supply diffusers or return air units. Install ceiling mounted units with rims tight against ceiling. Provide sponge rubber gaskets between ceiling and surface mounted diffusers for air leakage control. Provide suitable trim for flush mounted diffusers. For connecting the duct to diffuser, provide duct collar that is airtight and does not interfere with volume controller. Provide return or exhaust units that are similar to supply diffusers.

2.9.10.2 Perforated Plate Diffusers

Provide adjustable three-way, air pattern controls as indicated. Provide diffuser faceplates that do not sag or deflect when operating under design conditions.

2.9.10.3 Linear Diffusers

Make joints between diffuser sections that appear as hairline cracks. Provide alignment slots for insertion of key strips or other concealed means to align exposed butt edges of diffusers. Do not use screws and bolts in exposed face of frames or flanges. Metal-fill and ground smooth frames and flanges exposed below ceiling. Furnish separate pivoted or hinged adjustable air-volume-damper and separate air-deflection blades.

2.9.10.4 Registers and Grilles

Provide units that are four-way directional-control type, except provide return and exhaust registers that are fixed horizontal or vertical louver type similar in appearance to the supply register face. Furnish registers with sponge-rubber gasket between flanges and wall or ceiling. Install wall supply registers at least 6 inches below the ceiling unless otherwise indicated. Locate return and exhaust registers 6 inches above the floor unless otherwise indicated. Achieve four-way directional control by a grille face which can be rotated in 4 positions or by adjustment of horizontal and vertical vanes. Provide grilles as specified for registers, without volume control damper.

2.9.10.5 Registers

Double-deflection supply registers. Provide manufacturer-furnished volume dampers. Provide volume dampers of the group-operated, opposed-blade type and key adjustable by inserting key through face of register. Operating mechanism shall not project through any part of the register face. Automatic volume control devices are acceptable.

2.9.11 Louvers

Provide louvers for installation in exterior walls that are associated with the air supply and distribution system as specified in Section 07 60 00 FLASHING AND SHEET METAL .

2.9.12 Air Vents, Penthouses, and Goosenecks

Fabricate air vents, penthouses, and goosenecks from galvanized steel or aluminum sheets with galvanized or aluminum structural shapes. Provide sheet metal thickness, reinforcement, and fabrication that conform to SMACNA 1966. Accurately fit and secure louver blades to frames. Fold or bead edges of louver blades for rigidity and baffle these edges to exclude driving rain. Provide air vents, penthouses, and goosenecks with bird screen.

2.9.13 Bird Screens and Frames

Provide bird screens that conform to ASTM E2016, No. 2 mesh, aluminum or stainless steel. Provide "medium-light" rated aluminum screens. Provide "light" rated stainless steel screens. Provide removable type frames fabricated from either stainless steel or extruded aluminum.

2.9.14 Radon Exhaust Ductwork

Fabricate radon exhaust ductwork installed in or beneath slabs from Schedule 40 PVC pipe that conforms to ASTM D1785. Provide fittings that conform to ASTM D2466. Use solvent cement conforming to ASTM D2564 to make joints. Otherwise provide metal radon exhaust ductwork as specified herein.

2.10 AIR SYSTEMS EQUIPMENT

2.10.1 Fans

Test and rate fans according to AMCA 210. Calculate system effect on air moving devices in accordance with AMCA 201 where installed ductwork differs from that indicated on drawings. Install air moving devices to minimize fan system effect. Where system effect is unavoidable, determine the most effective way to accommodate the inefficiencies caused by system effect on the installed air moving device. The sound power level of the fans shall not exceed 85 dBA when tested according to AMCA 300 and rated in accordance with AMCA 301. Provide all fans with an AMCA seal. Connect fans to the motors either directly or indirectly with V-belt drive. Use V-belt drives designed for not less than 140 percent of the connected driving capacity. Provide variable pitch motor sheaves for 15 hp and below, and fixed pitch as defined by AHRI Guideline D (A fixed-pitch sheave is provided on both the fan shaft and the motor shaft. This is a non-adjustable speed drive.). Select variable pitch sheaves to drive the fan at a speed which can produce the specified capacity when set at the approximate midpoint of the sheave adjustment. When fixed pitch sheaves are furnished, provide a replaceable sheave when needed to achieve system air balance. Provide motors for V-belt drives with adjustable rails or bases. Provide removable metal guards for all exposed V-belt drives, and provide speed-test openings at the center of all rotating shafts. Provide fans with personnel screens or guards on both suction and supply ends, except that the screens need not be provided, unless otherwise indicated, where ducts are connected to the fan. Provide fan and motor assemblies with vibration-isolation supports or mountings as indicated. Use vibration-isolation units that are standard products with published loading ratings. Select each fan to produce the capacity required at the fan static pressure indicated. Provide sound power level as indicated. Obtain the sound power level values according to AMCA 300. Provide standard AMCA arrangement, rotation, and discharge as indicated. Provide power ventilators that conform to UL 705 and have a UL label.

2.10.1.1 Centrifugal Fans

Provide fully enclosed, single-width single-inlet, or double-width double-inlet centrifugal fans, with AMCA Pressure Class I, II, or III as required or indicated for the design system pressure. Provide impeller wheels that are rigidly constructed and accurately balanced both statically and dynamically. Provide forward curved or backward-inclined airfoil design fan blades in wheel sizes up to 30 inches. Provide backward-inclined airfoil design fan blades for wheels over 30 inches in diameter. Provide open-wheel radial type booster fans for exhaust dryer systems, and fans suitable for conveying lint and the temperatures encountered. Equip the fan shaft with a heat slinger to dissipate heat buildup along the shaft. Install an access (service) door to facilitate maintenance to these fans. Provide fan wheels over 36 inches in diameter with overhung pulleys and a bearing on each side of the wheel. Provide fan wheels 36 inches or less in diameter that have one or more extra long bearings between the fan wheel and the drive. Provide sleeve type, self-aligning and self-oiling bearings with oil reservoirs, or precision self-aligning roller or ball-type with accessible grease fittings or permanently lubricated type. Connect grease fittings to tubing for serviceability from a single accessible point. Provide L50 rated bearing life at not less than 200,000 hours as defined by ABMA 9 and ABMA 11. Provide steel, accurately finished fan shafts, with key seats and keys for

impeller hubs and fan pulleys. Provide fan outlets of ample proportions, designed for the attachment of angles and bolts for attaching flexible connections. Provide automatically operated inlet vanes on suction inlets. Provide automatically operated outlet dampers. Unless otherwise indicated, provide motors that do not exceed 1800 rpm and have open enclosures. Provide magnetic type motor starters with general-purpose enclosure.

2.10.1.2 In-Line Centrifugal Fans

Provide in-line fans with centrifugal backward inclined blades, stationary discharge conversion vanes, internal and external belt guards, and adjustable motor mounts. Mount fans in a welded tubular casing. Provide a fan that axially flows the air in and out. Streamline inlets with conversion vanes to eliminate turbulence and provide smooth discharge air flow. Enclose and isolate fan bearings and drive shafts from the air stream. Provide precision, self aligning ball or roller type fan bearings that are sealed against dust and dirt and are permanently lubricated. Provide L50 rated bearing life at not less than 200,000 hours as defined by ABMA 9 and ABMA 11. Provide motors with open enclosure.

2.10.1.3 Axial Flow Fans

Provide axial flow fans complete with drive components and belt guard, with steel housing, cast fan wheel, cast or welded steel diffusers, fan shaft, bearings, and mounting frame as a factory-assembled unit. Provide fan wheels that are dynamically balanced and keyed to the fan shaft, with radially projecting blades of airfoil cross-section. Enclose and isolate fan bearings and drive shafts from the air stream. Permanently lubricate fan bearings or provide them with accessible grease fittings. Provide precision self-aligning ball or roller type fan bearings that are sealed against dust and dirt. Provide fan bearings that have a L50 rated bearing life at not less than 200,000 hours of operation as defined by ABMA 9 and ABMA 11. Provide fan inlets with an aerodynamically shaped bell and an inlet cone. Install diffuser or straightening vanes at the fan discharge to minimize turbulence and provide smooth discharge air flow. Furnish fan unit with inlet and outlet flanges, and automatic operation adjustable inlet vanes. Unless otherwise indicated, provide motors that do not exceed 1800 rpm and have open enclosure. Provide magnetic motor starters across-the-line with general-purpose enclosure.

2.10.1.4 Ceiling Exhaust Fans

Provide centrifugal type, direct driven suspended cabinet-type ceiling exhaust fans. Provide fans with acoustically insulated housing. Provide chatter-proof backdraft damper. Provide egg-crate design or louver design integral face grille. Mount fan motors on vibration isolators. Furnish unit with mounting flange for hanging unit from above. Provide U.L. listed fans.

2.10.2 Coils

Provide fin-and-tube type coils constructed of seamless copper tubes and aluminum fins mechanically bonded or soldered to the tubes. Provide copper tube wall thickness that is a minimum of 0.020 inches.. Provide copper fins that are 0.0045 inch minimum thickness. Provide casing and tube support sheets that are not lighter than 16 gauge galvanized steel, formed to provide structural strength. When required, provide multiple tube supports to prevent tube sag. Test each coil at the factory under water at

not less than 400 psi air pressure and make suitable for 200 psi working pressure and 300 degrees F operating temperature unless otherwise stated. Mount coils for counterflow service. Rate and certify coils to meet the requirements of AHRI 410.

2.10.2.1 Water Coils

Install water coils with a pitch of not less than 1/8 inch/foot of the tube length toward the drain end. Use headers constructed of cast iron, welded steel or copper. Furnish each coil with a plugged vent and drain connection extending through the unit casing. Provide removable water coils with drain pans.

2.10.2.2 Steam Heating Coils

Construct steam coils from cast semisteel, welded steel or copper headers, and copper tubes. Construct headers from cast iron, welded steel or copper. Provide fin tube and header section that float within the casing to allow free expansion of tubing for coils subject to high pressure steam service. Provide each coil with a field or factory installed vacuum breaker. Provide single-tube type coils with tubes not less than 1/2 inch outside diameter, except for steam preheat coils. Provide supply headers that distribute steam evenly to all tubes at the indicated steam pressure. Factory test coils to ensure that, when supplied with a uniform face velocity, temperature across the leaving side is uniform with a maximum variation of no more than 5 percent.

2.10.2.3 Steam Preheat (Nonfreeze) Coils

Provide steam-distribution-tube type steam (nonfreeze) coils with condensing tubes not less than 1 inch outside diameter for tube lengths 60 inches and over and 1/2 inch outside diameter for tube lengths under 60 inches. Construct headers from cast iron, welded steel, or copper. Provide distribution tubes that are not less than 5/8 inch outside diameter for tube lengths 60 inches and over and 3/8 inch outside diameter for tube lengths under 60 inches with orifices to discharge steam to condensing tubes. Install distribution tubes concentric inside of condensing tubes and hold securely in alignment. Limit maximum length of a single coil to 144 inches. Factory test coils to ensure that, when supplied with a uniform face velocity, temperature across the leaving side is uniform with a maximum variation of no more than 5 percent.

2.10.2.4 Electric Heating Coil

Provide an electric duct heater coil in accordance with UL 1995 and NFPA 70. Provide duct- or unit-mounted coil. Provide nickel chromium resistor, single stage, strip type coil. Provide coil with a built-in or surface-mounted high-limit thermostat interlocked electrically so that the coil cannot be energized unless the fan is energized. Provide galvanized steel or aluminum coil casing and support brackets. Mount coil to eliminate noise from expansion and contraction and for complete accessibility for service.

2.10.2.5 Eliminators

Equip each cooling coil having an air velocity of over 400 fpm through the net face area with moisture eliminators, unless the coil manufacturer guarantees, over the signature of a responsible company official, that no moisture can be carried beyond the drip pans under actual conditions of

operation. Construct of minimum 24 gage copper , removable through the nearest access door in the casing or ductwork. Provide eliminators that have not less than two bends at 45 degrees and are spaced not more than 2-1/2 inches center-to-center on face. Provide each bend with an integrally formed hook as indicated in the SMACNA 1884.

2.10.2.6 Sprayed Coil Dehumidifiers

Provide assembly with reinforced, braced, and externally insulated galvanized steel casing, vertical in-line spray pump, bronze self-cleaning spray nozzles, galvanized steel pipe spray headers, adjustable float valve with replaceable neoprene seat, manufacturer's standard cooling coil, and welded black steel drain tank. Provide overflow drain, make-up, and bleed connection.

2.10.2.7 Corrosion Protection for Coastal Installations

2.10.3 Air Filters

List air filters according to requirements of UL 900, except list high efficiency particulate air filters of 99.97 percent efficiency by the DOP Test method under the Label Service to meet the requirements of UL 586.

2.10.3.1 Extended Surface Pleated Panel Filters

Provide 2 inch depth, sectional, disposable type filters of the size indicated with a MERV of 8 when tested according to ASHRAE 52.2. Provide initial resistance at 500 fpm that does not exceed 0.36 inches water gauge. Provide UL Class 2 filters, and nonwoven cotton and synthetic fiber mat media. Attach a wire support grid bonded to the media to a moisture resistant fiberboard frame. Bond all four edges of the filter media to the inside of the frame to prevent air bypass and increase rigidity.

2.10.3.2 Extended Surface Nonsupported Pocket Filters

Provide 30 inch depth, sectional, replaceable dry media type filters of the size indicated with a MERV of 13 when tested according to ASHRAE 52.2. Provide initial resistance at 500 fpm that does not exceed 0.45 inches water gauge. Provide UL Class 1 filters. Provide fibrous glass media, supported in the air stream by a wire or non-woven synthetic backing and secured to a galvanized steel metal header. Provide pockets that do not sag or flap at anticipated air flows. Install each filter in a factory preassembled, side access housing or a factory-made sectional frame bank, as indicated.

2.10.3.3 Cartridge Type Filters

Provide 12 inch depth, sectional, replaceable dry media type filters of the size indicated with a MERV of 13 when tested according to ASHRAE 52.2. Provide initial resistance at 500 fpm that does not exceed 0.56 inches, water gauge. Provide UL class 1 filters, and pleated microglass paper media with corrugated aluminum separators, sealed inside the filter cell to form a totally rigid filter assembly. Fluctuations in filter face velocity or turbulent airflow have no effect on filter integrity or performance. Install each filter with an extended surface pleated media panel filter as a prefilter in a factory preassembled side access housing, or a factory-made sectional frame bank, as indicated.

2.10.3.4 Holding Frames

Fabricate frames from not lighter than 16 gauge sheet steel with rust-inhibitor coating. Equip each holding frame with suitable filter holding devices. Provide gasketed holding frame seats. Make all joints airtight.

2.10.3.5 Filter Gauges

Provide dial type filter gauges, diaphragm actuated draft for all filter stations, including those filters which are furnished as integral parts of factory fabricated air handling units. Gauges shall be at least 3-7/8 inches in diameter, with white dials with black figures, and graduations with a minimum range of 1 inch of water beyond the specified final resistance for the filter bank on which each gauge is applied. Provide each gauge with a screw operated zero adjustment and two static pressure tips with integral compression fittings, two molded plastic vent valves, two 5 foot minimum lengths of 1/4 inch diameter aluminumvinyl tubing, and all hardware and accessories for gauge mounting.

2.11 AIR HANDLING UNITS

2.11.1 Field-Fabricated Air Handling Units

Provide built-up units as specified in paragraph DUCT SYSTEMS. Provide fans, coils spray-coil dehumidifiers, and air filters as specified in paragraph AIR SYSTEMS EQUIPMENT for types indicated.

2.11.2 Factory-Fabricated Air Handling Units

Provide single-zone draw-through typeorsingle-zone blow-through type or multizone blow-through typeblow-through double-deck typeblow-through triple deck type units as indicated. Units shall include fans, coils, airtight insulated casing, prefilters, secondary filter sections, and diffuser sections where indicated, air blenderadjustable V-belt drives, belt guards for externally mounted motors, access sections where indicated, mixing box combination sectional filter-mixing box, pan] humidifier, vibration-isolators, and appurtenances required for specified operation. Provide vibration isolators as indicated. Physical dimensions of each air handling unit shall be suitable to fit space allotted to the unit with the capacity indicated. Provide air handling unit that is rated in accordance with AHRI 430 and AHRI certified for cooling.

2.11.2.1 Casings

Provide the following:

a. Casing sections 2 inch double] wall type as indicated, constructed of a minimum 18 gauge galvanized steel, or 18 gauge corrosion-resisting sheet steel conforming to ASTM A167, Type 304. Design and construct casing with an integral insulated structural galvanized steel frame such that exterior panels are non-load bearing.

b. Individually removable exterior panels with standard tools. Removal shall not affect the structural integrity of the unit. Furnish casings with access sections, according to paragraph AIR HANDLING UNITS, inspection doors, and access doors, all capable of opening a minimum of 90 degrees, as indicated.

c. Insulated, fully gasketed, double-wall type inspection and access doors, of a minimum 18 gauge outer and 20 gauge inner panels made of either galvanized steel or corrosion-resisting sheet steel conforming to ASTM A167, Type 304. Doors shall be rigid and provided with heavy duty hinges and latches. Inspection doors shall be a minimum 12 inches wide by 12 inches high. Access doors shall be a minimum 24 inches wide, the full height of the unit casing or a minimum of 6 foot, whichever is less.

d. Double-wall insulated type drain pan (thickness equal to exterior casing) constructed of 16 gauge galvanized steel, conforming to ASHRAE 62.1. Construct drain pans water tight, treated to prevent corrosion, and designed for positive condensate drainage. When 2 or more cooling coils are used, with one stacked above the other, condensate from the upper coils shall not flow across the face of lower coils. Provide intermediate drain pans or condensate collection channels and downspouts, as required to carry condensate to the unit drain pan out of the air stream and without moisture carryover. Construct drain pan to allow for easy visual inspection, including underneath the coil without removal of the coil and to allow complete and easy physical cleaning of the pan underneath the coil without removal of the coil. Coils shall be individually removable from the casing.

e. Casing insulation that conforms to NFPA 90A. Single-wall casing sections handling conditioned air shall be insulated with not less than 1 inch thick, 1-1/2 pound density coated fibrous glass material having a thermal conductivity not greater than 0.23 Btu/hr-sf-F. Double-wall casing sections handling conditioned air shall be insulated with not less than 2 inches of the same insulation specified for single-wall casings. Foil-faced insulation is not an acceptable substitute for use with double wall casing. Double wall insulation shall be completely sealed by inner and outer panels.

f. Factory applied fibrous glass insulation that conforms to ASTM C1071, except that the minimum thickness and density requirements do not apply, and that meets the requirements of NFPA 90A. Make air handling unit casing insulation uniform over the entire casing. Foil-faced insulation is not an acceptable substitute for use on double-wall access doors and inspections doors and casing sections.

g. Duct liner material, coating, and adhesive that conforms to fire-hazard requirements specified in Section 23 07 00 THERMAL INSULATION FOR MECHANICAL SYSTEMS. Protect exposed insulation edges and joints where insulation panels are butted with a metal nosing strip or coat to meet erosion resistance requirements of ASTM C1071.

h. A latched and hinged inspection door, in the fan and coil sections. Plus additional inspection doors, access doors and access sections where indicated.

2.11.2.2 Heating and Cooling Coils

Provide coils as specified in paragraph AIR SYSTEMS EQUIPMENT.

2.11.2.3 Air Filters

Provide air filters as specified in paragraph AIR SYSTEMS EQUIPMENT for

types and thickness indicated.

2.11.2.4 Fans

Provide the following:

a. Fans that are double-inlet, centrifugal type with each fan in a separate scroll. Dynamically balance fans and shafts prior to installation into air handling unit, then after it has been installed in the air handling unit, statically and dynamically balance the entire fan assembly. Mount fans on steel shafts, accurately ground and finished.

b. Fan bearings that are sealed against dust and dirt and are precision self-aligning ball or roller type, with L50 rated bearing life at not less than 200,000 hours as defined by ABMA 9 and ABMA 11. Bearings shall be permanently lubricated or lubricated type with lubrication fittings readily accessible at the drive side of the unit. Support bearings by structural shapes, or die formed sheet structural members, or support plates securely attached to the unit casing. Do not fasten bearings directly to the unit sheet metal casing. Furnish fans and scrolls with coating indicated.

c. Fans that are driven by a unit-mounted, or a floor-mounted motor connected to fans by V-belt drive complete with belt guard for externally mounted motors. Furnish belt guards that are the three-sided enclosed type with solid or expanded metal face. Belt drives shall be designed for not less than a 1.3 service factor based on motor nameplate rating.

d. Motor sheaves that are variable pitch for 25 hp and below and fixed pitch above 25 hp as defined by AHRI Guideline D. Where fixed sheaves are required, the use of variable pitch sheaves is allowed during air balance, but replace them with an appropriate fixed sheave after air balance is completed. Select variable pitch sheaves to drive the fan at a speed that produces the specified capacity when set at the approximate midpoint of the sheave adjustment. Furnish motors for V-belt drives with adjustable bases, and with open enclosures.

e. Motor starters of magnetic type with general-purpose enclosure. Select unit fan or fans to produce the required capacity at the fan static pressure with sound power level as indicated. Obtain the sound power level values according to AMCA 300, ASHRAE 68, or AHRI 260 I-P.

2.11.2.5 Access Sections and Filter/Mixing Boxes

Provide access sections where indicated and furnish with access doors as shown. Construct access sections and filter/mixing boxes in a manner identical to the remainder of the unit casing and equip with access doors. Design mixing boxes to minimize air stratification and to promote thorough mixing of the air streams.

2.11.2.6 Diffuser Sections

Furnish diffuser sections between the discharge of all housed supply fans and cooling coils of blow-through single zone units. Provide diffuser sections that are fabricated by the unit manufacturer in a manner identical to the remainder of the unit casing, designed to be airtight under positive static pressures up to 8 inches water gauge and with an access door on each

side for inspection purposes. Provide a diffuser section that contains a perforated diffusion plate, fabricated of galvanized steel, Type 316 stainless steel, aluminum, or steel treated for corrosion with manufacturer's standard corrosion-resisting finish, and designed to accomplish uniform air flow across the down-stream coil while reducing the higher fan outlet velocity to within plus or minus 5 percent of the required face velocity of the downstream component.

2.12 TERMINAL UNITS

2.12.1 Room Fan-Coil Units

Provide base units that include galvanized coil casing, coil assembly drain pan valve and piping package, outside air damper, wall intake box, air filter, fans, motor, fan drive, motor switch, an enclosure for cabinet models and casing for concealed models, leveling devices integral with the unit for vertical type units, and sound power levels as indicated. Obtain sound power level data or values for these units according to test procedures based on AHRI 350. Sound power values apply to units provided with factory fabricated cabinet enclosures and standard grilles. Values obtained for the standard cabinet models are acceptable for concealed models without separate test provided there is no variation between models as to the coil configuration, blowers, motor speeds, or relative arrangement of parts. Provide automatic valves and controls as specified in paragraph SUPPLEMENTAL COMPONENTS/SERVICES, subparagraph CONTROLS. Fasten each unit securely to the building structure. Provide units with capacity indicated. Provide room fan-coil units that are certified as complying with AHRI 440, and meet the requirements of UL 1995.

2.12.1.1 Enclosures

Fabricate enclosures from not lighter than 18 gauge steel, reinforced and braced. Provide enclosures with front panels that are removable and have 1/4 inch closed cell insulation or 1/2 inch thick dual density foil faced fibrous glass insulation. Make the exposed side of a high density, erosion-proof material suitable for use in air streams with velocities up to 4,500 fpm. Provide a discharge grille that is adjustable and that is of such design as to properly distribute air throughout the conditioned space. Plastic discharge and return grilles are acceptable provided the plastic material is certified by the manufacturer to be classified as flame resistant according to UL 94 and the material complies with the heat deflection criteria specified in UL 1995. Provide galvanized or factory finished ferrous metal surfaces with corrosion resistant enamel, and access doors or removable panels for piping and control compartments, plus easy access for filter replacement. Provide duct discharge collar for concealed models.

2.12.1.2 Fans

Provide steel or aluminum, multiblade, centrifugal type fans. In lieu of metal, fans and scrolls could be of non-metallic materials of suitably reinforced compounds with smooth surfaces. Dynamically and statically balance the fans. Provide accessible assemblies for maintenance. Disassemble and re-assemble by means of mechanical fastening devices and not by epoxies or cements.

2.12.1.3 Coils

Fabricate coils from not less than 3/8 inch outside diameter seamless

copper tubing, with copper or aluminum fins mechanically bonded or soldered to the tubes. Provide coils with not less than 1/2 inch outside diameter flare or sweat connectors, accessory piping package with thermal connections suitable for connection to the type of control valve supplied, and manual air vent. Test coils hydrostatically at 300 psi or under water at 250 psi air pressure. Provide coils suitable for 200 psi working pressure. Make provisions for coil removal.

2.12.1.4 Drain Pans

Size and locate drain and drip pans to collect all water condensed on and dripping from any item within the unit enclosure or casing. Provide condensate drain pans designed for self-drainage to preclude the buildup of microbial slime and thermally insulated to prevent condensation and constructed of not lighter than 21 gauge type 304 stainless steel or noncorrosive ABS plastic. Provide insulation with a flame spread rating not over 25 without evidence of continued progressive combustion, a smoke developed rating no higher than 50, and of a waterproof type or coated with a waterproofing material. Design drain pans so as to allow no standing water and pitch to drain. Provide minimum 3/4 inch NPT or 5/8 inch OD drain connection in drain pan. Provide plastic or metal auxiliary drain pans to catch drips from control and piping packages, eliminating insulation of the packages; if metal, provide auxiliary pans that comply with the requirements specified above. Extend insulation at control and piping connections 1 inch minimum over the auxiliary drain pan.

2.12.1.5 Manually Operated Outside Air Dampers

Provide manually operated outside air dampers according to the arrangement indicated, and parallel airfoil type dampers of galvanized construction. Provide blades that rotate on stainless steel or nylon sleeve bearings.

2.12.1.6 Filters

Provide disposable type filter that complies with ASHRAE 52.2. Filters in each unit shall be removable without the use of tools.

2.12.1.7 Motors

Provide motors of the permanent split-capacitor type with built-in thermal overload protection, directly connected to unit fans. Provide motor switch with two or three speeds and off, manually operated, and mounted on an identified plate inside the unit below or behind an access door. In lieu of the above fan speed control, a solid-state variable-speed controller having a minimum speed reduction of 50 percent is allowed. Provide motors with permanently-lubricated or oilable sleeve-type or combination ball and sleeve-type bearings with vibration isolating mountings suitable for continuous duty. Provide a motor power consumption, shown in watts, at the fan operating speed selected to meet the specified capacity that does not exceed the following values:

Free Discharge Motors			
Unit Capacity (cfm)	Maximum Power Consumption (Watts)		
	115V	230V	277V
200	70	110	90
300	100	110	110
400	170	150	150
600	180	210	220
800	240	240	230
1000	310	250	270
1200	440	400	440

High Static Motors	
Unit Capacity (cfm)	Maximum Power Consumption (Watts)
200	145
300	145
400	210
600	320
800	320
1000	530
1200	530

2.12.2 Coil Induction Units

Provide base unit that includes air plenums, air-discharge nozzles, air discharge grilles, recirculation grilles, water coil assembly, valve and piping package, condensate drain pan, and adjustable air-balancing dampers, plus an enclosure for cabinet models and casing for concealed models. Make each unit capable of producing not less than the capacity indicated without exceeding the indicated static pressure. Provide a sound power level as indicated with power level data or values for these units based on tests conducted according to ASA S12.51. Sound power values apply to units provided with factory fabricated cabinet enclosures and standard grilles. The values obtained for the standard cabinet models are acceptable for concealed models without separate tests, provided there is no variation between models as to coil configuration, air discharge nozzles, air

balancing dampers, or relative arrangement of parts. Provide automatic valves and controls as specified in paragraph SUPPLEMENTAL COMPONENTS/SERVICES, subparagraph CONTROLS. Secure each unit to the building structure. Provide units with capacity indicated.

2.12.2.1 Enclosures

Fabricate enclosures from not lighter than 18 gauge steel, reinforced and braced. Provide a removable front panel of enclosure and insulate when required acoustically and to prevent condensation. Provide discharge grilles that are adjustable and properly distribute air throughout the conditioned space. Plastic discharge and return grilles are not acceptable. Provide access doors for all piping and control compartments.

2.12.2.2 Air Plenums

Fabricate plenums from galvanized steel with interior acoustically baffled and lined with sound absorbing material to attenuate the sound power from the primary air supply to the room. Provide heat-resistant nozzles that are integral with or attached airtight to the plenum. Where coil induction units are supplied with vertical runouts, furnish a streamlined, vaned, mitered elbow transition piece for connection between the unit and ductwork. Provide an adjustable air-balancing damper in each unit.

2.12.2.3 Coils

Fabricate coils from not less than 3/8 inch outside diameter seamless copper tubing, with copper or aluminum fins, mechanically bonded or soldered to the tubes. Furnish coil connections with not less than 1/2 inch outside diameter flare or sweat connectors, accessory piping package with terminal connections suitable for connection to the type of control valve supplied, and manual air vent. Test coils hydrostatically at 300 psi or under water at 250 psi air pressure and provide coils suitable for 200 psi working pressure.

2.12.2.4 Screens

Provide easily accessible lint screens or throwaway filters for each unit.

2.12.2.5 Drain Pan

Size and locate drain and drip pans to collect condensed water dripping from any item within the unit enclosure. Provide drain pans constructed of not lighter than 21 gauge steel, galvanized after fabrication, and thermally insulated to prevent condensation. Provide insulation that has a flame spread rating not over 25 without evidence of continued progressive combustion, a smoke developed rating no higher than 50, and that is a waterproof type or coated with a waterproofing material. In lieu of the above, drain pans constructed of die-formed 22 gauge steel are allowed, formed from a single sheet and galvanized after fabrication and insulated and coated as for the 21 gauge steel material or of die-formed 21 gauge type 304 stainless steel insulated as specified above. Pitch drain pans to drain. Provide drain connection when a condensate drain system is indicated. Make connection a minimum 3/4 inch NPT or 5/8 inch OD.

2.12.3 Variable Air Volume (VAV) and Dual Duct Terminal Units

a. Provide VAV and dual duct terminal units that are the type, size, and capacity shown, mounted in the ceiling or wall cavity, plus units that

are suitable for single or dual duct system applications. Provide actuators and controls as specified in paragraph SUPPLEMENTAL COMPONENTS/SERVICES, subparagraph CONTROLS. For each VAV terminal unit, provide a temperature sensor in the unit discharge ductwork.

b. Provide unit enclosures that are constructed of galvanized steel not lighter than 22 gauge or aluminum sheet not lighter than 18 gauge. Provide single or multiple discharge outlets as required. Units with flow limiters are not acceptable. Provide unit air volume that is factory preset and readily field adjustable without special tools. Provide reheat coils as indicated.

c. Attach a flow chart to each unit. Base acoustic performance of the terminal units upon units tested according to AHRI 880 I-P with the calculations prepared in accordance with AHRI 885. Provide sound power level as indicated. Show discharge sound power for minimum and 1-1/2 inches water gauge inlet static pressure. Provide acoustical lining according to NFPA 90A.

2.12.3.1 Constant Volume, Single Duct Terminal Units

Provide constant volume, single duct, terminal units that contain within the casing, a constant volume regulator. Provide volume regulators that control air delivery to within plus or minus 5 percent of specified air flow subjected to inlet pressure from 3/4 to 6 inch water gauge.

2.12.3.2 Variable Volume, Single Duct Terminal Units

Provide variable volume, single duct, terminal units with a calibrated air volume sensing device, air valve or damper, actuator, and accessory relays. Provide units that control air volume to within plus or minus 5 percent of each air set point volume as determined by the thermostat with variations in inlet pressures from 3/4 to 6 inch water gauge. Provide units with an internal resistance not exceeding 0.4 inch water gauge at maximum flow range. Provide external differential pressure taps separate from the control pressure taps for air flow measurement with a 0 to 1 inch water gauge range.

2.12.3.3 Variable Volume, Single Duct, Fan-Powered Terminal Units

Provide variable volume, single duct, fan-powered terminal units with a calibrated air volume sensing device, air valve or damper, actuator, fan and motor, and accessory relays. Provide units that control primary air volume to within plus or minus 5 percent of each air set point as determined by the thermostat with variations in inlet pressure from 3/4 to 6 inch water gauge. Provide unit fan that is centrifugal, direct-driven, double-inlet type with forward curved blades. Provide either single speed with speed controller or three-speed, permanently lubricated, permanent split-capacitor type fan motor. Isolate fan/motor assembly from the casing to minimize vibration transmission. Provide factory furnished fan control that is wired into the unit control system. Provide a factory-mounted pressure switch to operate the unit fan whenever pressure exists at the unit primary air inlet or when the control system fan operates.

2.12.3.4 Dual Duct Terminal Units

Provide dual duct terminal units with hot and cold inlet valve or dampers that are controlled in unison by single or dual actuators. Provide actuator as specified in paragraph SUPPLEMENTAL COMPONENTS/SERVICES,

subparagraph CONTROLS. Provide unit that controls delivered air volumes within plus or minus 5 percent with inlet air variations from 1 to 8 inch water gauge in either duct. Include mixing baffles with the unit casing. Provide cabinet and closed duct leakage that does not exceed 2 percent of maximum rated air volume. Provide units with an internal resistance that does not exceed 6 inch water gauge at maximum flow range.

2.12.3.5 Ceiling Induction Terminal Units

Provide ceiling induction unit with a calibrated primary air volume sensing device, primary air valve, induced air damper, and insulated induction tube. Arrange unit to induce air from the ceiling plenum to maintain a maximum total flow circulated to the conditioned space. Vary primary air upon demand of the room thermostat. Upon a demand for maximum cooling, provide a unit that delivers 100 percent primary air and, at minimum cooling, delivers 25 percent primary air. Provide a terminal unit capable of closing to full shut off without additional actuators or linkage changes. Provide terminals that reset primary air volume within plus or minus 5 percent determined by the thermostat regardless of upstream changes in the static pressure. Provide a minimum inlet static pressure that does not exceed 1 inch water gauge, including a maximum of 0.3 inch water gauge downstream static pressure. Provide external differential pressure taps separate from control pressure taps for primary air flow measurement with 0 to 1 inch water gauge range. Make each unit normally open upon loss of pneumatic pressure. Factory pipe actuator and accuracy controls requiring only field installation of 20 psi pneumatic main air and room thermostat.

2.12.3.6 Series Fan Powered Variable Air Volume (VAV) Terminals

Provide units factory assembled, designed, tested, rated in accordance with AHRI 880 I-P, that are AHRI certified, listed in the AHRI DCAACP and that produce a supply air discharge mix by modulation of conditioned primary air and recirculating of return air. Provide units that include casing, centrifugal fan and motor, primary VAV damper or valve, electronic volume regulator, discharge air damper, primary air inlet cone with high and low pressure flow sensors, recirculating air filter frames, filter, and electrical disconnect. Provide hot water heating coils integral to the terminal, or provide insulated hot water coil section attached to the discharge of the terminal.

2.12.3.6.1 Casing

Provide removable full bottom access panels for servicing internal components without disturbing duct connections. Insulate inside of casing with manufacturer's standard insulation. Provide units that have recirculating air inlet equipped with filter frame, round primary damper or valve, and unit mounting brackets.

2.12.3.6.2 Fans and Motors

Provide centrifugal, forward curved, multiblade, fan wheels with direct-drive motors. Provide motors that are the high efficiency permanent-split capacitor type with thermal overload protection, permanently lubricated bearings, and have three speeds or are equipped with solid state speed controllers. Provide isolation between fan motor assembly and unit casing. Provide fan and motor that is removable through casing access panel.

2.12.3.6.3 Flow Sensor

Provide ring or cross type sensor with minimum of two pickup points which average the velocity across the inlet. Obtain flow measurement within plus or minus 5 percent of rated airflow with 1.5 diameters of straight duct upstream of unit and inlet static variation of 0.5 to 5.0 inches water gauge. Supply flow measuring taps and calibration flowchart with each unit for field balancing airflows.

2.12.3.6.4 Primary VAV Damper or Valve

Provide galvanized steel damper blade that closes against gasket inside unit. Connect damper to operating shaft with a positive mechanical connection. Provide nylon bearing for damper shaft. Cylindrical die cast aluminum valve inlet tapered to fit round flexible ducts with integral flow diffuser and beveled self-centering disc. Provide damper or valve leakage at shutoff that does not exceed 2 percent of capacity at 1 inch water gauge pressure.

2.12.3.6.5 Regulator

Provide electronic volume regulator. Electronic controls contained in NEMA ICS 6, Type 1 enclosure sealed from airflow. Provide unit with controls mounted on side or on air valve. System powered regulators are not permitted. Provide volume regulator that resets primary air volume as determined by thermostat, within upstream static pressure variation noted in paragraph titled "Flow Sensor." Volume regulators shall be field adjustable, factory set and calibrated to indicated maximum and minimum primary airflows, direct acting and normally open upon loss of pneumatic pressure.

2.12.3.6.6 Electrical

Provide unit that incorporates single point electrical connection with electrical disconnect. Electrical components shall be UL or ETL listed, installed in accordance with NFPA 70 and mounted in control box. Units UL or ETL listed as an assembly do not require airflow switch interlock with electric heating coil, when factory assembled.

2.12.3.6.7 Filters

Provide UL listed throwaway one inch thick fiberglass filters, standard dust-holding capacity.

2.12.3.7 Reheat Units

2.12.3.7.1 Hot Water Coils

Provide fin-and-tube type hot-water coils constructed of seamless copper tubes and copper or aluminum fins mechanically bonded or soldered to the tubes. Provide headers that are constructed of cast iron, welded steel or copper. Provide casing and tube support sheets that are 16 gauge, galvanized steel, formed to provide structural strength. Provide tubes that are correctly circuited for proper water velocity without excessive pressure drop and are drainable where required or indicated. At the factory, test each coil at not less than 250 psi air pressure and provide coils suitable for 200 psi working pressure. Install drainable coils in the air handling units with a pitch of not less than 1/8 inch per foot of tube length toward the drain end. Coils shall conform to the provisions of

AHRI 410.

2.12.3.7.2 Steam Coils

Provide steam coils constructed of cast semisteel, welded steel, or copper headers, red-brass or copper tubes, and copper or aluminum fins mechanically bonded or soldered to the tubes. Roll and bush, braze or weld tubes into headers. Provide coil casings and tube support sheets, with collars of ample width, that are not lighter than 16 gauge galvanized steel formed to provide structural strength. When required, furnish multiple tube supports to prevent tube sag. Float the fin tube and header section within the casing to allow free expansion of tubing for coils subject to high pressure steam service. Provide coils that are factory pressure tested and capable of withstanding 250 psi hydrostatic test pressure or 250 psi air pressure, and are for 100 psi steam working pressure. Provide steam-distribution tube type preheat coils with condensing tubes having not less than 5/8 inch outside diameters. Provide distribution tubes that have not less than 3/8 inch outside diameter, with orifices to discharge steam to condensing tubes. Install distribution tubes concentric inside of condensing tubes held securely in alignment. Limit the maximum length of a single coil to 120 times the diameter of the outside tube. Other heating coils shall be single tube type with not less than 1/2 inch outside diameter. Provide supply headers that distribute steam evenly to all tubes at the indicated steam pressure. Coils shall conform to the provisions of AHRI 410.

2.12.3.7.3 Electric Resistance Heaters

Provide the duct-mounting type electric resistance heaters consisting of a nickel-chromium resistor mounted on refractory material and a steel or aluminum frame for attachment to ductwork. Provide electric duct heater that meets the requirement of Underwriters Laboratories and NFPA 70 and is provided with a built-in or surface-mounted high-limit thermostat. Interlock electric duct heaters electrically so that they cannot be energized unless the fan is running.

2.12.4 Unit Ventilators

Provide unit ventilators that include an enclosure, galvanized casing, coil assembly, resistance heating coil assembly, drain pan, air filters, fan assembly, fan drive, motor, motor controller, dampers, damper operators, and sound power level as indicated. Obtain sound power level data or values for these units according to test procedures based on AHRI 350. Sound power values apply to units provided with factory fabricated cabinet enclosures and standard grilles, when handling standard flow for which the unit air capacity is rated. Secure each unit to the building structure. Provide the unit ventilators with capacity indicated. Provide the year-round classroom type unit ventilator with automatic controls arranged to properly heat, cool, and ventilate the room. Provide automatic valves and controls as specified in paragraph SUPPLEMENTAL COMPONENTS/SERVICES, subparagraph CONTROLS. Make the sequence of control any one of the standard ANSI cycles specified in paragraph CONTROLS.

2.12.4.1 Enclosures

Fabricate enclosures from not lighter than 16 gauge galvanized steel, reinforced and braced, or all welded framework with panels to provide equivalent strength. Provide casing that is acoustically and thermally insulated internally with not less than 1/2 inch thick dual density fibrous

glass insulation. Make the exposed side a high density, erosion-proof material suitable for use in air streams with velocities up to 4500 fpm. Fasten the insulation with waterproof, fire-resistant adhesive. Design front panel for easy removal by one person. Provide discharge grilles that have adjustable grilles or grilles with adjustable vanes and properly distribute air throughout the conditioned space. Provide return grilles that are removable where front panel does not provide access to interior components. Plastic discharge or return grilles are not acceptable. Furnish removable panels or access doors for all piping and control compartments. Provide fan switch that is key operated or accessible through a locked access panel. Install gaskets at the back and bottom of the unit for effective air seal, as required.

2.12.4.2 Electric Resistance Heating Elements

Provide electric resistance heating elements that are of the sheathed, finned, tubular type, or of the open resistance type designed for direct exposure to the air stream. Provide heating element electrical characteristics as indicated. Where fan motor or control voltage is lower than required for the electric-resistance heating element, install a fused factory mounted and wired transformer.

2.12.4.3 Fans

Provide fans that meet the requirements of ASHRAE 90.1 - IP as specified in paragraph AIR SYSTEMS EQUIPMENT. Provide galvanized steel or aluminum, multiblade, centrifugal type fans, dynamically and statically balanced. Equip fan housings with resilient mounted, self-aligning permanently lubricated ball bearings, sleeve bearings, or combination ball and sleeve bearings, capable of not less than 2000 hours of operation on one oiling. Provide direct-connected fans.

2.12.4.4 Coils

Provide coils that are circuited for a maximum water velocity of 8 fps without excessive pressure drop and are otherwise as specified for hot water coils in paragraph TERMINAL UNITS.

2.12.4.5 Drain Pans

Size and locate drain and drip pans to collect all condensed water dripping from any item within the unit enclosure. Provide drain pans constructed of not lighter than 18 gauge steel, galvanized after fabrication, and thermally insulated to prevent condensation. Provide insulation that is coated with a fire-resistant waterproofing material. In lieu of the above, drain pans constructed of die-formed 20 gauge steel is allowed, formed from a single sheet and galvanized after fabrication and insulated and coated as for the 18 gauge steel material, or of die-formed 18 gauge type 304 stainless steel insulated as specified above. Pitch drain pans to drain. Furnish drain connection unless otherwise indicated. Make the minimum connection 3/4 inch NDT or 5/8 inch OD.

2.12.4.6 Filters

Disposable type rated in accordance with ASHRAE 52.2, installed upstream of coil.

2.12.4.7 Dampers

Provide an outside air proportioning damper on each unit. In addition, provide a vane to prevent excessive outside air from entering unit and to prevent blow-through of outside air through the return air grille under high wind pressures. Where outside air and recirculated air proportioning dampers are provided on the unit, an additional vane is not required. Provide face and bypass dampers for each unit to ensure constant air volume at all positions of the dampers. Furnish each unit with a factory installed control cam assembly, pneumatic motor, or electric motor to operate the face and bypass dampers and outside air damper or outside air and recirculated air dampers in the sequence as specified in paragraph SUPPLEMENTAL COMPONENTS/SERVICES, subparagraph CONTROLS.

2.12.4.8 Motors

Provide permanent split-capacitor type motors with built-in thermal overload protection and automatic reset. Mount motor on a resilient mounting, isolated from the casing and suitable for operation on electric service available. Provide a manually operated motor switch that provides for 2 or 3 speeds and off, mounted on an identified plate inside the unit below or behind an access door. In lieu of speed control, provide a solid state variable speed controller having minimum speed reduction of 50 percent.

2.12.4.9 Outside Air Intakes

Provide the manufacturer's standard design outside air intakes furnished with 1/2 inch mesh bird screen or louvers on 1/2 inch centers.

2.13 ENERGY RECOVERY DEVICES

2.13.1 Rotary Wheel

Provide unit that is a factory fabricated and tested assembly for air-to-air energy recovery by transfer of sensible heat from exhaust air to supply air stream, with device performance according to ASHRAE 84 and that delivers an energy transfer effectiveness of not less than 70 percent with cross-contamination not in excess of 0.1 percent of exhaust airflow rate at system design differential pressure, including purging sector if provided with wheel. Provide exchange media that is chemically inert, moisture-resistant, fire-retardant, laminated, nonmetallic material which complies with NFPA 90A. Isolate exhaust and supply streams by seals which are static, field adjustable, and replaceable. Equip chain drive mechanisms with ratcheting torque limiter or slip-clutch protective device. Fabricate enclosure from galvanized steel and include provisions for maintenance access. Provide recovery control and rotation failure provisions as indicated.

2.13.2 Desiccant Wheel

Provide counterflow supply, regeneration airstreams, a rotary type dehumidifier designed for continuous operation, and extended surface type wheel structure in the axial flow direction with a geometry that allows for laminar flow over the operating range for minimum air pressure differentials. Provide the dehumidifier complete with a drive system utilizing a fractional-horsepower electric motor and speed reducer assembly driving the rotor. Include a slack-side tensioner for automatic take-up for belt-driven wheels. Provide an adsorbing type desiccant material.

Apply the desiccant material to the wheel such that the entire surface is active as a desiccant and the desiccant material does not degrade or detach from the surface of the wheel which is fitted with full-face, low-friction contact seals on both sides to prevent cross leakage. Provide rotary structure that has underheat, overheat and rotation fault circuitry. The wheel assembly shall come with a warranty for a minimum of five years.

2.13.3 Plate Heat Exchanger

Provide energy recovery ventilator unit that is factory-fabricated for indoor installation, consisting of a flat plate cross-flow heat exchanger, cooling coil, supply air fan and motor and exhaust air fan and motor. The casing shall be 20 gauge G90, galvanized steel, double wall construction with one inch insulation. Provide fibrous desiccant cross-flow type heat exchanger core capable of easy removal from the unit.

2.14 FACTORY PAINTING

Factory paint new equipment, which are not of galvanized construction. Paint with a corrosion resisting paint finish according to ASTM A123/A123M or ASTM A924/A924M. Clean, phosphatize and coat internal and external ferrous metal surfaces with a paint finish which has been tested according to ASTM B117, ASTM D1654, and ASTM D3359. Submit evidence of satisfactory paint performance for a minimum of 125 hours for units to be installed indoors and 500 hours for units to be installed outdoors. Provide rating of failure at the scribe mark that is not less than 6, average creepage not greater than 1/8 inch. Provide rating of the inscribed area that is not less than 10, no failure. On units constructed of galvanized steel that have been welded, provide a final shop docket of zinc-rich protective paint on exterior surfaces of welds or welds that have burned through from the interior according to ASTM D520 Type I.

Factory painting that has been damaged prior to acceptance by the Contracting Officer shall be field painted in compliance with the requirements of paragraph FIELD PAINTING OF MECHANICAL EQUIPMENT.

2.15 SUPPLEMENTAL COMPONENTS/SERVICES

2.15.1 Chilled, Condenser, or Dual Service Water Piping

The requirements for chilled, condenser, or dual service water piping and accessories are specified in Section 23 64 26 CHILLED, CHILLED-HOT, AND CONDENSER WATER PIPING SYSTEMS

2.15.2 Refrigerant Piping

The requirements for refrigerant piping are specified in Section 23 23 00 REFRIGERANT PIPING.

2.15.3 Condensate Drain Lines

Provide and install condensate drainage for each item of equipment that generates condensate in accordance with Section 22 00 00 PLUMBING, GENERAL PURPOSEexcept as modified herein.

2.15.4 Backflow Preventers

The requirements for backflow preventers are specified in Section 22 00 00 PLUMBING, GENERAL PURPOSE.

2.15.5 Insulation

The requirements for shop and field applied insulation are specified in Section 23 07 00 THERMAL INSULATION FOR MECHANICAL SYSTEMS.

2.15.6 Controls

The requirements for controls are specified in Section 23 05 93 TESTING, ADJUSTING, AND BALANCING OF HVAC SYSTEMS.

PART 3 EXECUTION

3.1 EXAMINATION

After becoming familiar with all details of the work, verify all dimensions in the field, and advise the Contracting Officer of any discrepancy before performing the work.

3.2 INSTALLATION

a. Install materials and equipment in accordance with the requirements of the contract drawings and approved manufacturer's installation instructions. Accomplish installation by workers skilled in this type of work. Perform installation so that there is no degradation of the designed fire ratings of walls, partitions, ceilings, and floors.

b. No installation is permitted to block or otherwise impede access to any existing machine or system. Install all hinged doors to swing open a minimum of 120 degrees. Provide an area in front of all access doors that clears a minimum of 3 feet. In front of all access doors to electrical circuits, clear the area the minimum distance to energized circuits as specified in OSHA Standards, part 1910.333 (Electrical-Safety Related work practices)and an additional 3 feet.

c. Except as otherwise indicated, install emergency switches and alarms in conspicuous locations. Mount all indicators, to include gauges, meters, and alarms in order to be easily visible by people in the area.

3.2.1 Condensate Drain Lines

Provide water seals in the condensate drain from all units . Provide a depth of each seal of 2 inches plus the number of inches, measured in water gauge, of the total static pressure rating of the unit to which the drain is connected. Provide water seals that are constructed of 2 tees and an appropriate U-bend with the open end of each tee plugged. Provide pipe cap or plug cleanouts where indicated. Connect drains indicated to connect to the sanitary waste system using an indirect waste fitting. Insulate air conditioner drain lines as specified in Section 23 07 00 THERMAL INSULATION FOR MECHANICAL SYSTEMS.

3.2.2 Equipment and Installation

Provide frames and supports for tanks, compressors, pumps, valves, air handling units, fans, coils, dampers, and other similar items requiring supports. Floor mount or ceiling hang air handling units as indicated. Anchor and fasten as detailed. Set floor-mounted equipment on not less than 6 inch concrete pads or curbs doweled in place unless otherwise indicated. Make concrete foundations heavy enough to minimize the

intensity of the vibrations transmitted to the piping, duct work and the surrounding structure, as recommended in writing by the equipment manufacturer. In lieu of a concrete pad foundation, build a concrete pedestal block with isolators placed between the pedestal block and the floor. Make the concrete foundation or concrete pedestal block a mass not less than three times the weight of the components to be supported. Provide the lines connected to the pump mounted on pedestal blocks with flexible connectors. Submit foundation drawings as specified in paragraph DETAIL DRAWINGS. .

3.2.3 Access Panels

Install access panels for concealed valves, vents, controls, dampers, and items requiring inspection or maintenance of sufficient size, and locate them so that the concealed items are easily serviced and maintained or completely removed and replaced. Provide access panels as specified in Section 05 50 13 MISCELLANEOUS METAL FABRICATIONS.

3.2.4 Flexible Duct

Install pre-insulated flexible duct in accordance with the latest printed instructions of the manufacturer to ensure a vapor tight joint. Provide hangers, when required to suspend the duct, of the type recommended by the duct manufacturer and set at the intervals recommended.

3.2.5 Metal Ductwork

Install according to SMACNA 1966 unless otherwise indicated. Install duct supports for sheet metal ductwork according to SMACNA 1966, unless otherwise specified. Do not use friction beam clamps indicated in SMACNA 1966. Anchor risers on high velocity ducts in the center of the vertical run to allow ends of riser to move due to thermal expansion. Erect supports on the risers that allow free vertical movement of the duct. Attach supports only to structural framing members and concrete slabs. Do not anchor supports to metal decking unless a means is provided and approved for preventing the anchor from puncturing the metal decking. Where supports are required between structural framing members, provide suitable intermediate metal framing. Where C-clamps are used, provide retainer clips.

3.2.5.1 Underground Ductwork

Provide PVC plastisol coated galvanized steel underground ductwork with coating on interior and exterior surfaces and watertight joints. Install ductwork as indicated, according to ACCA Manual 4 and manufacturer's instructions. Maximum burial depth is 6 feet.

3.2.5.2 Radon Exhaust Ductwork

Perforate subslab suction piping where indicated. Install PVC joints as specified in ASTM D2855.

3.2.5.3 Light Duty Corrosive Exhaust Ductwork

For light duty corrosive exhaust ductwork, use PVC plastisol coated galvanized steel with PVC coating on interior surfaces.

3.2.6 FRP Ductwork

Provide fibrous glass reinforced plastic ducting and related structures that conform to SMACNA 1403. Provide flanged joints where indicated. Crevice-free butt lay-up joints are acceptable where flanged joints are not indicated. When ambient temperatures are lower than 50 degrees F, heat cure joints by exothermic reaction heat packs.

3.2.7 Kitchen Exhaust Ductwork

3.2.7.1 Ducts Conveying Smoke and Grease Laden Vapors

Provide ducts conveying smoke and grease laden vapors that conform to requirements of NFPA 96. Make seams, joints, penetrations, and duct-to-hood collar connections with a liquid tight continuous external weld. Provide duct material that is a minimum 18 gauge, Type 304L or 316L, stainless steel .

3.2.7.2 Exposed Ductwork

Provide exposed ductwork that is fabricated from minimum 18 gauge, Type 304L or 316L, stainless steel with continuously welded joints and seams. Pitch ducts to drain at hoods and low points indicated. Match surface finish to hoods.

3.2.7.3 Concealed Ducts Conveying Moisture Laden Air

Fabricate concealed ducts conveying moisture laden air from minimum 18 gauge, Type 300 series, stainless steel . Continuously weld, braze, or solder joints to be liquid tight. Pitch ducts to drain at points indicated. Make transitions to other metals liquid tight, companion angle bolted and gasketed.

3.2.8 Acoustical Duct Lining

Apply lining in cut-to-size pieces attached to the interior of the duct with nonflammable fire resistant adhesive conforming to ASTM C916, Type I, NFPA 90A, UL 723, and ASTM E84. Provide top and bottom pieces that lap the side pieces and are secured with welded pins, adhered clips of metal, nylon, or high impact plastic, and speed washers or welding cup-head pins installed according to SMACNA 1966. Provide welded pins, cup-head pins, or adhered clips that do not distort the duct, burn through, nor mar the finish or the surface of the duct. Make pins and washers flush with the surfaces of the duct liner and seal all breaks and punctures of the duct liner coating with the nonflammable, fire resistant adhesive. Coat exposed edges of the liner at the duct ends and at other joints where the lining is subject to erosion with a heavy brush coat of the nonflammable, fire resistant adhesive, to prevent delamination of glass fibers. Apply duct liner to flat sheet metal prior to forming duct through the sheet metal brake. Additionally secure lining at the top and bottom surfaces of the duct by welded pins or adhered clips as specified for cut-to-size pieces. Other methods indicated in SMACNA 1966 to obtain proper installation of duct liners in sheet metal ducts, including adhesives and fasteners, are acceptable.

3.2.9 Dust Control

To prevent the accumulation of dust, debris and foreign material during construction, perform temporary dust control protection. Protect the

distribution system (supply and return) with temporary seal-offs at all inlets and outlets at the end of each day's work. Keep temporary protection in place until system is ready for startup.

3.2.10 Insulation

Provide thickness and application of insulation materials for ductwork, piping, and equipment according to Section 23 07 00 THERMAL INSULATION FOR MECHANICAL SYSTEMS. Externally insulate outdoor air intake ducts and plenums up to the point where the outdoor air reaches the conditioning unit.

3.2.11 Duct Test Holes

Provide holes with closures or threaded holes with plugs in ducts and plenums as indicated or where necessary for the use of pitot tube in balancing the air system. Plug insulated duct at the duct surface, patched over with insulation and then marked to indicate location of test hole if needed for future use.

3.2.12 Power Roof Ventilator Mounting

Provide foamed 1/2 inch thick, closed-cell, flexible elastomer insulation to cover width of roof curb mounting flange. Where wood nailers are used, predrill holes for fasteners.

3.2.13 Power Transmission Components Adjustment

Test V-belts and sheaves for proper alignment and tension prior to operation and after 72 hours of operation at final speed. Uniformly load belts on drive side to prevent bouncing. Make alignment of direct driven couplings to within 50 percent of manufacturer's maximum allowable range of misalignment.

3.3 EQUIPMENT PADS

Provide equipment pads to the dimensions shown or, if not shown, to conform to the shape of each piece of equipment served with a minimum 3-inch margin around the equipment and supports. Allow equipment bases and foundations, when constructed of concrete or grout, to cure a minimum of 28 calendar days before being loaded.

3.4 CUTTING AND PATCHING

Install work in such a manner and at such time that a minimum of cutting and patching of the building structure is required. Make holes in exposed locations, in or through existing floors, by drilling and smooth by sanding. Use of a jackhammer is permitted only where specifically approved. Make holes through masonry walls to accommodate sleeves with an iron pipe masonry core saw.

3.5 CLEANING

Thoroughly clean surfaces of piping and equipment that have become covered with dirt, plaster, or other material during handling and construction before such surfaces are prepared for final finish painting or are enclosed within the building structure. Before final acceptance, clean mechanical equipment, including piping, ducting, and fixtures, and free from dirt, grease, and finger marks. When the work area is in an occupied space such as office, laboratory or warehouse protect all furniture and equipment

from dirt and debris. Incorporate housekeeping for field construction work which leaves all furniture and equipment in the affected area free of construction generated dust and debris; and, all floor surfaces vacuum-swept clean.

3.6 PENETRATIONS

Provide sleeves and prepared openings for duct mains, branches, and other penetrating items, and install during the construction of the surface to be penetrated. Cut sleeves flush with each surface. Place sleeves for round duct 15 inches and smaller. Build framed, prepared openings for round duct larger than 15 inches and square, rectangular or oval ducts. Sleeves and framed openings are also required where grilles, registers, and diffusers are installed at the openings. Provide one inch clearance between penetrating and penetrated surfaces except at grilles, registers, and diffusers. Pack spaces between sleeve or opening and duct or duct insulation with mineral fiber conforming with ASTM C553, Type 1, Class B-2.

3.6.1 Sleeves

Fabricate sleeves, except as otherwise specified or indicated, from 20 gauge thick mill galvanized sheet metal. Where sleeves are installed in bearing walls or partitions, provide black steel pipe conforming with ASTM A53/A53M, Schedule 20.

3.6.2 Framed Prepared Openings

Fabricate framed prepared openings from 20 gauge galvanized steel, unless otherwise indicated.

3.6.3 Insulation

Provide duct insulation in accordance with Section 23 07 00 THERMAL INSULATION FOR MECHANICAL SYSTEMS continuous through sleeves and prepared openings except firewall penetrations. Terminate duct insulation at fire dampers and flexible connections. For duct handling air at or below 60 degrees F, provide insulation continuous over the damper collar and retaining angle of fire dampers, which are exposed to unconditioned air.

3.6.4 Closure Collars

Provide closure collars of a minimum 4 inches wide, unless otherwise indicated, for exposed ducts and items on each side of penetrated surface, except where equipment is installed. Install collar tight against the surface and fit snugly around the duct or insulation. Grind sharp edges smooth to prevent damage to penetrating surface. Fabricate collars for round ducts 15 inches in diameter or less from 20 gauge galvanized steel. Fabricate collars for square and rectangular ducts, or round ducts with minimum dimension over 15 inches from 18 gauge galvanized steel. Fabricate collars for square and rectangular ducts with a maximum side of 15 inches or less from 20 gauge galvanized steel. Install collars with fasteners a maximum of 6 inches on center. Attach to collars a minimum of 4 fasteners where the opening is 12 inches in diameter or less, and a minimum of 8 fasteners where the opening is 20 inches in diameter or less.

3.6.5 Firestopping

Where ducts pass through fire-rated walls, fire partitions, and fire rated chase walls, seal the penetration with fire stopping materials as specified

in Section 07 84 00 FIRESTOPPING.

3.7 FIELD PAINTING OF MECHANICAL EQUIPMENT

Clean, pretreat, prime and paint metal surfaces; except aluminum surfaces need not be painted. Apply coatings to clean dry surfaces. Clean the surfaces to remove dust, dirt, rust, oil and grease by wire brushing and solvent degreasing prior to application of paint, except clean to bare metal on metal surfaces subject to temperatures in excess of 120 degrees F. Where more than one coat of paint is specified, apply the second coat after the preceding coat is thoroughly dry. Lightly sand damaged painting and retouch before applying the succeeding coat. Provide aluminum or light gray finish coat.

3.7.1 Temperatures less than 120 degrees F

Immediately after cleaning, apply one coat of pretreatment primer applied to a minimum dry film thickness of 0.3 mil, one coat of primer applied to a minimum dry film thickness of one mil; and two coats of enamel applied to a minimum dry film thickness of one mil per coat to metal surfaces subject to temperatures less than 120 degrees F.

3.7.2 Temperatures between 120 and 400 degrees F

Apply two coats of 400 degrees F heat-resisting enamel applied to a total minimum thickness of two mils to metal surfaces subject to temperatures between 120 and 400 degrees F.

3.7.3 Temperatures greater than 400 degrees F

Apply two coats of 315 degrees C 600 degrees F heat-resisting paint applied to a total minimum dry film thickness of two mils to metal surfaces subject to temperatures greater than 400 degrees F.

3.8 IDENTIFICATION SYSTEMS

Provide identification tags made of brass, engraved laminated plastic, or engraved anodized aluminum, indicating service and item number on all valves and dampers. Provide tags that are 1-3/8 inch minimum diameter with stamped or engraved markings. Make indentations black for reading clarity. Attach tags to valves with No. 12 AWG 0.0808-inch diameter corrosion-resistant steel wire, copper wire, chrome-plated beaded chain or plastic straps designed for that purpose.

3.9 DUCTWORK LEAK TESTS

The requirements for ductwork leak tests are specified in Section 23 05 93 TESTING, ADJUSTING AND BALANCING FOR HVAC.

3.10 DAMPER ACCEPTANCE TEST

Submit the proposed schedule, at least 2 weeks prior to the start of test. Operate all fire dampers and smoke dampers under normal operating conditions, prior to the occupancy of a building to determine that they function properly. Test each fire damper equipped with fusible link by having the fusible link cut in place. Test dynamic fire dampers with the air handling and distribution system running. Reset all fire dampers with the fusible links replaced after acceptance testing. To ensure optimum operation and performance, install the damper so it is square and free from

racking.

3.11 TESTING, ADJUSTING, AND BALANCING

The requirements for testing, adjusting, and balancing are specified in Section 23 05 93 TESTING, ADJUSTING AND BALANCING FOR HVAC. Begin testing, adjusting, and balancing only when the air supply and distribution, including controls, has been completed, with the exception of performance tests.

3.12 PERFORMANCE TESTS

After testing, adjusting, and balancing is complete as specified, test each system as a whole to see that all items perform as integral parts of the system and temperatures and conditions are evenly controlled throughout the building. Record the testing during the applicable season. Make corrections and adjustments as necessary to produce the conditions indicated or specified. Conduct capacity tests and general operating tests by an experienced engineer. Provide tests that cover a period of not less than 14 days for each system and demonstrate that the entire system is functioning according to the specifications. Make coincidental chart recordings at points indicated on the drawings for the duration of the time period and record the temperature at space thermostats or space sensors, the humidity at space humidistats or space sensors and the ambient temperature and humidity in a shaded and weather protected area.

Submit test reports for the ductwork leak test, and performance tests in booklet form, upon completion of testing. Document phases of tests performed including initial test summary, repairs/adjustments made, and final test results in the reports.

3.13 CLEANING AND ADJUSTING

Provide a temporary bypass for water coils to prevent flushing water from passing through coils. Inside of room fan-coil unitscoil-induction units, air terminal units, unit ventilators, thoroughly clean ducts, plenums, and casing of debris and blow free of small particles of rubbish and dust and then vacuum clean before installing outlet faces. Wipe equipment clean, with no traces of oil, dust, dirt, or paint spots. Provide temporary filters prior to startup of all fans that are operated during construction, and install new filters after all construction dirt has been removed from the building, and the ducts, plenums, casings, and other items specified have been vacuum cleaned. Maintain system in this clean condition until final acceptance. Properly lubricate bearings with oil or grease as recommended by the manufacturer. Tighten belts to proper tension. Adjust control valves and other miscellaneous equipment requiring adjustment to setting indicated or directed. Adjust fans to the speed indicated by the manufacturer to meet specified conditions. Maintain all equipment installed under the contract until close out documentation is received, the project is completed and the building has been documented as beneficially occupied.

3.14 OPERATION AND MAINTENANCE

3.14.1 Operation and Maintenance Manuals

Submit six manuals at least 2 weeks prior to field training. Submit data complying with the requirements specified in Section 01 78 23 OPERATION AND MAINTENANCE DATA. Submit Data Package 3 for the items/units listed under

SD-10 Operation and Maintenance Data

3.14.2 Operation And Maintenance Training

Conduct a training course for the members of the operating staff as designated by the Contracting Officer. Make the training period consist of a total of 8 hours of normal working time and start it after all work specified herein is functionally completed and the Performance Tests have been approved. Conduct field instruction that covers all of the items contained in the Operation and Maintenance Manuals as well as demonstrations of routine maintenance operations. Submit the proposed On-site Training schedule concurrently with the Operation and Maintenance Manuals and at least 14 days prior to conducting the training course.

-- End of Section --

SECTION 23 01 30.41

HVAC SYSTEM CLEANING
02/15

PART 1 GENERAL

1.1 REFERENCES

The publications listed below form a part of this specification to the extent referenced. The publications are referred to within the text by the basic designation only.

AMERICAN SOCIETY OF HEATING, REFRIGERATING AND AIR-CONDITIONING ENGINEERS (ASHRAE)

ASHRAE 62.1	(2010; Errata 2011; INT 3 2012; INT 4 2012; INT 5 2013) Ventilation for Acceptable Indoor Air Quality

NATIONAL AIR DUCT CLEANERS ASSOCIATION (NADCA)

ACR	(2013) Standard for Assessment, Cleaning, and Restoration of HVAC Systems
NADCA HVAC Inspection Manual	(2005) Procedures for Assessing the Cleanliness of Commercial HVAC Systems

NORTH AMERICAN INSULATION MANUFACTURERS ASSOCIATION (NAIMA)

NAIMA AH112	(1993) Cleaning Fibrous Glass or Lined Sheet Metal Ducts
NAIMA AH122	(2006) Cleaning Fibrous Insulated Duct Systems - Recommended Practices
NAIMA AH127	(1999) Impact of Duct Cleaning on Internal Duct Insulation

SHEET METAL AND AIR CONDITIONING CONTRACTORS' NATIONAL ASSOCIATION (SMACNA)

SMACNA 1966	(2005) HVAC Duct Construction Standards Metal and Flexible, 3rd Edition

U.S. ENVIRONMENTAL PROTECTION AGENCY (EPA)

EPA 402-C-01-001	(2001) IAQ Building Education and Assessment Tool (I-BEAM)
EPA 402-F-91-102	(1991) Building Air Quality: A Guide for Building Owners and Facility Managers

UNDERWRITERS LABORATORIES (UL)

UL 181	(2013) Factory-Made Air Ducts and Air Connectors

UL 181A	(2013) Standard for Closure Systems for Use with Rigid Air Ducts and Air Connectors
UL 181B	(2013) Standard for Closure Systems for Use with Flexible Air Ducts and Air Connectors

1.2 DEFINITIONS

1.2.1 NADCA Standards

Perform the services specified here in accordance with the current published standards of the National Air Duct Cleaners Association (ACR and NADCA HVAC Inspection Manual).

a. All terms in this specification are defined as stated in the NADCA Standards.

b. Follow NADCA Standards without modification or deviation.

1.3 SUBMITTALS

Government approval is required for submittals with a "G" designation; submittals not having a "G" designation are for information only. When used, a designation following the "G" designation identifies the office that will review the submittal for the Government. Submittals with an "S" are for inclusion in the Sustainability Notebook, in conformance to Section 01 33 29 SUSTAINABILITY REPORTING. Submit the following in accordance with Section 01 33 00 SUBMITTAL PROCEDURES:

SD-01 Preconstruction Submittals

Record of Existing Conditions; G

Coordination Plan; G

NADCA Firm; G

NADCA Work Execution Schedule; G

SD-03 Product Data

Material Safety Data Sheets (MSDS); G

1.4 QUALITY CONTROL

1.4.1 NADCA Firm

Submit information certifying that the NADCA firm is a first tier subcontractor who is not affiliated with any other company participating in work on this contract, including furnishing equipment. Further, submit the following, for the firm, to Contracting Officer for approval:

a. Independent NADCA firm:

NADCA Firm: NADCA registration number and expiration date of current certification;

NADCA Supervisor Qualifications: Name and copy of NADCA supervisor certificate and expiration date of current certification.

NADCA Air System Cleaning Specialist (ASCS): Name and documented evidence that the team field leader has satisfactorily performed full-time supervision of HVAC cleaning work in the field for not less than 3 years immediately preceding this contract's bid opening date.

NADCA Team Assistants: Names and documented evidence that each field technician has satisfactorily assisted a NADCA team field leader in performance of HVAC cleaning work in the field for not less than one year immediately preceding this contract's bid opening date.

Current Certificates: Ensure registrations and certifications are current, and valid for the duration of this contract. Renew Certifications which expire prior to completion of the HVAC cleaning work, in a timely manner so that there is no lapse in registration or certification. NADCA agency or NADCA team personnel without a current registration or current certification are not to perform HVAC cleaning work on this contract.

b. TAB Team Members: NADCA team approved to accomplish work on this contract are full-time employees of the NADCA firm. No other personnel is allowed to do HVAC cleaning work on this contract.

c. Replacement of NADCA Team Members: Replacement of members may occur if each new member complies with the applicable personnel qualifications and each is approved by the Contracting Officer.

1.4.2 Experience

Submit records of experience in the field of HVAC system cleaning. Bids will only be considered from firms which are regularly engaged in HVAC system maintenance with an emphasis on HVAC system cleaning and decontamination.

1.4.3 Equipment, Materials and Labor

Possess and furnish all necessary equipment, materials and labor to adequately perform the specified services and comply with the applicable provisions of NADCA General Specifications for the Cleaning of Commercial HVAC Systems and ASHRAE 62.1.

a. Assure that all employees have received safety equipment training, medical surveillance programs, individual health protection measures, and manufacturer's product and Material Safety Data Sheets (MSDS) as required for the work by the U.S. Occupational Safety and Health Administration, and as described by this specification. For work performed in countries outside of the U.S.A., comply with applicable national safety codes and standards.

b. Maintain a copy of all current MSDS documentation and safety certifications at the site at all times, as well as comply with all other site documentation requirements of applicable OSHA programs and

this specification.

c. Submit all Material Safety Data Sheets (MSDS) for all chemical products proposed used in the cleaning process, including all VOC ratings.

1.4.4 Licensing

Provide proof of maintaining the proper license(s), if any, as required to do work in the state of Virginia . Comply with all Federal, State and local rules, regulations, and licensing requirements.

1.4.5 Health And Safety

1.4.5.1 Safety Standards

Comply with all applicable Federal, State, and local requirements for protecting the safety of the contractors' employees, building occupants, and the environment. In particular, follow all applicable standards of the Occupational Safety and Health Administration (OSHA) when working in accordance with this specification.

1.4.5.2 Occupant Safety

Employ no processes or materials in such a manner that introduce additional hazards into occupied spaces.

1.4.5.3 Disposal of Debris

Dispose of all debris removed from the HVAC System in accordance with applicable Federal, State and local requirements.

1.5 PROJECT/SITE CONDITIONS

1.5.1 Mechanical Drawings

Obtain one copy of the following documents:

a. Project drawings and specifications

b. Approved construction revisions pertaining to the HVAC system

c. Any existing indoor air quality (IAQ) assessments or environmental reports prepared for the facility.

Submit a NADCA Work Execution Schedule to the Contracting Officer within 10 working days of the contract award.

1.5.2 Site Conditions

The HVAC system includes any interior surface of the facility's air distribution system for conditioned spaces and/or occupied zones. This includes the entire heating, air-conditioning and ventilation system from the points where the air enters the system to the points where the air is discharged from the system. The return air grilles, return air ducts (except ceiling plenums and mechanical room) to the air handling unit (AHU), the interior surfaces of the AHU, mixing box, coil compartment, condensate drain pans, humidifiers and dehumidifiers, supply air ducts, fans, fan housing, fan blades, air wash systems, spray eliminators, turning vanes, filters, filter housings, reheat coils, and supply diffusers are all

considered part of the HVAC system. The HVAC system may also include other components such as dedicated exhaust and ventilation components and make-up air systems.

PART 2 PRODUCTS

Not Used

PART 3 EXECUTION

Perform the services specified here in accordance with the current published standards of the National Air Duct Cleaners Association (ACR and NADCA HVAC Inspection Manual).

a. All terms in this specification have their meaning defined as stated in the NADCA Standards.

b. Follow NADCA Standards with no modifications or deviations being allowed. Remove visible surface contaminants and deposits from within the HVAC system in strict accordance with these specifications.

3.1 PREPARATION

3.1.1 HVAC System Inspections And Site Preparations

3.1.1.1 HVAC System Evaluation

Prior to the commencement of any cleaning work, perform a visual inspection of the HVAC system in the presence of the Contracting Officer to determine appropriate methods, tools, and equipment required to satisfactorily complete this project. Notify the Contracting Officer 10 days prior to the planned inspection.

Document damaged system components found during the inspection and submit to the Contracting Officer, clearly labeled "Record of Existing Conditions."

3.1.1.2 Site Evaluation and Preparations

Conduct a site evaluation, and establish a specific, coordination plan which details how each area of the building is protected during the various phases of the project.

3.2 APPLICATION

3.2.1 General HVAC System Cleaning Requirements

3.2.1.1 Containment

Collect debris removed during cleaning and take precautions to ensure that debris is not otherwise dispersed outside the HVAC system during the cleaning process.

3.2.1.2 Particulate Collection

Where the Particulate Collection Equipment (PCE) is exhausting inside the building, use HEPA filtration with 99.97 percent collection efficiency for 0.3-micron size (or greater). When the PCE is exhausting outside the building, undertake mechanical cleaning operations only with PCE, including adequate filtration to contain debris removed from the HVAC system. When

the PCE is exhausting outside the building, take precautions to locate the equipment down wind and away from all air intakes and other points of entry into the building.

3.2.1.3 Controlling Odors

Take all reasonable measures to control offensive odors and/or mist vapors during the cleaning process.

3.2.1.4 Component Cleaning

Employ cleaning methods such that all HVAC system components are Visibly Clean as defined in applicable standards. Upon completion, return all components to those settings recorded just prior to cleaning operations.

3.2.1.5 Air-Volume Control Devices

Mark the position of dampers and any air-directional mechanical devices inside the HVAC system prior to cleaning and, upon completion, restore to their marked position.

3.2.1.6 Service Openings

Utilize service openings, as required for proper cleaning, at various points of the HVAC system for physical and mechanical entry, and inspection. Utilize the existing service openings already installed in the HVAC system where possible.

Create other openings where needed, created and resealed in conformance with NADCA Standard 05. Place closures so they do not significantly hinder, restrict, alter the air-flow within the system, or compromise the structural integrity of the system. Properly insulate closures to prevent heat loss/gain or condensation on surfaces within the system. Conform construction techniques used in the creation of openings to requirements of applicable building and fire codes, and applicable NFPA, SMACNA and NADCA Standards. Cutting service openings into flexible duct is not permitted. Disconnect flexible duct at the ends as needed for proper cleaning and inspection.

Reseal rigid fiber glass ductboard duct systems in accordance with NAIMA recommended practices; NAIMA AH112, NAIMA AH122, and NAIMA AH127. Only closure techniques which comply with UL 181, UL 181A, or UL 181B are suitable for fiber glass duct system closures.

Clearly mark all service openings, capable of being re-opened for future inspection or remediation, and report their location in project report documents.

3.2.1.7 Ceiling Sections (Tile)

Carefully remove and reinstall ceiling sections to gain access to HVAC systems during the cleaning process. Replace any damaged ceiling sections caused by the removal at no cost to the Government.

3.2.1.8 Air Distribution Devices (Registers, Grilles and Diffusers)

Clean all air distribution devices.

3.2.1.9 Air Handling Units, Terminal Units, Blowers and Exhaust Fans

Ensure that supply, return, and exhaust fans and blowers are thoroughly cleaned. Areas for cleaning include blowers, fan housings, plenums (except ceiling supply and return plenums), scrolls, blades, or vanes, shafts, baffles, dampers and drive assemblies. Remove all visible surface contamination deposits in accordance with NADCA Standards.

a. Clean all air handling unit (AHU) internal surfaces, components and condensate collectors and drains.

b. Assure that a suitable operative drainage system is in place prior to beginning wash down procedures.

c. Clean all coils and related components, including evaporator fins.

3.2.1.10 Duct Systems

a. Create service openings in the system as necessary in order to accommodate cleaning of otherwise inaccessible areas.

b. Mechanically clean all duct systems to remove all visible contaminants, such that the systems are capable of passing NADCA Cleaning Verification Testings Standards.

3.2.2 Mechanical Cleaning Methodology

3.2.2.1 Source Removal Cleaning Methods

Clean the HVAC system using Source Removal mechanical cleaning methods designed to extract contaminants from within the HVAC system and safely remove contaminants from the facility. Select Source Removal methods which will render the HVAC System Visibly Clean and capable of passing NADCA cleaning verification methods Standards and other specified standards and tests, in accordance with all general requirements. Use no cleaning method, or combination of methods, which could potentially damage components of the HVAC system or negatively alter the integrity of the system.

Incorporate the use of vacuum collection devices that are operated continuously during cleaning for all methods used. Connect a vacuum device to the downstream end of the section being cleaned through a predetermined opening. Use a vacuum collection device of sufficient power to render all areas being cleaned under negative pressure, such that containment of debris and the protection of the indoor environment is assured.

Equip all vacuum devices exhausting air inside the building, including hand-held vacuums and wet-vacuums, with HEPA filters (minimum efficiency).

Equip all vacuum devices exhausting air outside the facility with Particulate Collection including adequate filtration to contain Debris removed from the HVAC system, in a manner that does not allow contaminants to re-enter the facility. Release of debris outdoors which violates any outdoor environmental standards, codes or regulations is not allowed.

All methods require mechanical agitation devices to dislodge debris adhered to interior HVAC system surfaces, such that debris may be safely conveyed to vacuum collection devices. Acceptable methods include those which will not potentially damage the integrity of the ductwork, nor damage porous

surface materials such as liners inside the ductwork or system components.

3.2.2.2 Methods of Cleaning Fibrous Glass Insulated Components

Thoroughly clean glass thermal insulation elements present in any equipment or ductwork with HEPA vacuuming equipment. Clean while the HVAC system is under constant negative pressure, and not permitted to get wet in accordance with applicable NADCA and NAIMA standards and recommendations.

Do not use cleaning methods that cause damage to fibrous glass components or renders the system capable of passing Cleaning Verification Tests NADCA Standards.

3.2.2.3 Damaged Fibrous Glass Material

If there is any evidence of damage, deterioration, delamination, friable material, mold or fungus growth, or moisture such that fibrous glass materials cannot be restored by cleaning or resurfacing with an acceptable insulation repair coating, identify them to the Contracting Officer for replacement.

When requested or specified, remediate exposed damaged insulation in air handlers and/or ductwork requiring replacement.

3.2.2.4 Replacement Material

If replacement of fiber glass materials is required, conform all materials to applicable industry codes and standards, including those of UL and SMACNA 1966.

Replacement of damaged insulation is **not** covered by this specification.

3.2.2.5 Cleaning of Coils

Use any cleaning method which renders the coil visibly clean and capable of passing NADCA Coil Cleaning Verification Standards. Coil drain pans are subject to Non-Porous Surfaces Cleaning Verification. Maintain operability of the drain for the condensate at all times. Do not damage, displace, inhibit heat transfer, or cause erosion of the coil surface or fins, and conform to coil manufacturer recommendations when available. Thoroughly rinse coils with clean water to remove any latent residues.

3.2.2.6 Antimicrobial Agents and Coatings

Only apply antimicrobial agents if active fungal growth is reasonably suspected, or where unacceptable levels of fungal contamination have been verified through testing.

Perform application of any antimicrobial agents used to control the growth of fungal or bacteriological contaminants after the removal of surface deposits and debris.

Use only antimicrobial agents registered by the U.S. Environmental Protection Agency (EPA 402-F-91-102)(EPA 402-C-01-001) specifically for use within HVAC system.

Apply antimicrobial agents in strict accordance with manufacturer's instructions.

Use only antimicrobial coating products, for both porous and non-porous surfaces,which are EPA registered, water soluble solutions with supporting efficacy data and MSDS records.

Apply antimicrobial coatings according to manufacturer's instructions. Spray coatings directly onto interior ductwork surfaces, rather than "fog" downstream onto surfaces. Achieve a continuous film on the surface treated by the coating application, and apply in strict accordance with manufacturer's minimum millage surface application rate standards for effectiveness.

3.3 FIELD QUALITY CONTROL

3.3.1 CLEANLINESS VERIFICATION

3.3.1.1 General

Verification of HVAC System cleanliness is determined after mechanical cleaning and before the application of any treatment or introduction of any treatment-related substance to the HVAC system, including antimicrobial agents and coatings.

3.3.1.2 Visual Inspection

Visually inspect the HVAC system to ensure that no visible contaminants are present.

If no contaminants are evident through visual inspection, consider the HVAC system clean; however, further verification of the system cleanliness through gravimetric or wipe testing analysis testing may be requested at the discretion of the Contracting Officer.

If visible contaminants are evident through visual inspection, re-clean those portions of the system where contaminants are visible, and subject to re-inspection for cleanliness.

3.3.1.3 Verification of Coil Cleaning

Cleaning is to restore the coil pressure drop to within 10 percent of the pressure drop measured when the coil was first installed. If the original pressure drop is not known, the coil will be considered clean only if the coil is free of foreign matter and chemical residue, based on a thorough visual inspection (see NADCA HVAC Inspection Manual Standards).

3.3.2 Post-Project Report

At the conclusion of the project, provide a Testing Procedures Summary and Post-Project Report indicating the following:

a. Success of the cleaning project, as verified through visual inspection or gravimetric analysis.

b. Areas of the system found to be damaged and/or in need of repair.

-- End of Section --

SECTION 23 05 93

TESTING, ADJUSTING, AND BALANCING FOR HVAC
08/09

PART 1 GENERAL

1.1 REFERENCES

The publications listed below form a part of this specification to the extent referenced. The publications are referred to within the text by the basic designation only.

ACOUSTICAL SOCIETY OF AMERICA (ASA)

ASA S1.11 PART 1	(2014) American National Standard Electroacoustics - Octave-Band and Fractional-Octave-Band Filters - Part 1: Specifications
ASA S1.4	(1983; Amendment 1985; R 2006) Specification for Sound Level Meters (ASA 47)

AIR MOVEMENT AND CONTROL ASSOCIATION INTERNATIONAL (AMCA)

AMCA 203	(1990; R 2011) Field Performance Measurements of Fan Systems

AMERICAN SOCIETY OF HEATING, REFRIGERATING AND AIR-CONDITIONING ENGINEERS (ASHRAE)

ASHRAE HVAC APP IP HDBK	(2011) HVAC Applications Handbook, I-P Edition

ASSOCIATED AIR BALANCE COUNCIL (AABC)

AABC MN-1	(2002; 6th ed) National Standards for Total System Balance
AABC MN-4	(1996) Test and Balance Procedures

NATIONAL ENVIRONMENTAL BALANCING BUREAU (NEBB)

NEBB MASV	(2006) Procedural Standards for Measurements and Assessment of Sound and Vibration
NEBB PROCEDURAL STANDARDS	(2005) Procedural Standards for TAB (Testing, Adjusting and Balancing) Environmental Systems

SHEET METAL AND AIR CONDITIONING CONTRACTORS' NATIONAL ASSOCIATION (SMACNA)

SMACNA 1780	(2002) HVAC Systems - Testing, Adjusting and Balancing, 3rd Edition

SMACNA 1858	(2004) HVAC Sound And Vibration Manual - First Edition
SMACNA 1972 CD	(2012) HVAC Air Duct Leakage Test Manual - 2nd Edition

1.2 DEFINITIONS

a. AABC: Associated Air Balance Council.

b. COTR: Contracting Officer's Technical Representative.

c. DALT: Duct air leakage test

d. DALT'd: Duct air leakage tested

e. HVAC: Heating, ventilating, and air conditioning; or heating, ventilating, and cooling.

f. NEBB: National Environmental Balancing Bureau

g. Out-of-tolerance data: Pertains only to field acceptance testing of Final DALT or TAB report. When applied to DALT work, this phase means "a leakage rate measured during DALT field acceptance testing which exceeds the leakage rate allowed by Appendix D REQUIREMENTS FOR DUCT AIR LEAK TESTING." When applied to TAB work this phase means "a measurement taken during TAB field acceptance testing which does not fall within the range of plus 5 to minus 5 percent of the original measurement reported on the TAB Report for a specific parameter."

h. Season of maximum heating load: The time of year when the outdoor temperature at the project site remains within plus or minus 30 degrees Fahrenheit of the project site's winter outdoor design temperature, throughout the period of TAB data recording.

i. Season of maximum cooling load: The time of year when the outdoor temperature at the project site remains within plus or minus 5 degrees Fahrenheit of the project site's summer outdoor design temperature, throughout the period of TAB data recording.

j. Season 1, Season 2: Depending upon when the project HVAC is completed and ready for TAB, Season 1 is defined, thereby defining Season 2. Season 1 could be the season of maximum heating load, or the season of maximum cooling load.

k. Sound measurements terminology: Defined in AABC MN-1, NEBB MASV, or SMACNA 1858 (TABB).

l. TAB: Testing, adjusting, and balancing (of HVAC systems).

m. TAB'd: HVAC Testing/Adjusting/Balancing procedures performed.

n. TAB Agency: TAB Firm

o. TAB team field leader: TAB team field leader

p. TAB team supervisor: TAB team engineer.

q. TAB team technicians: TAB team assistants.

r. TABB: Testing Adjusting and Balancing Bureau.

1.2.1 Similar Terms

In some instances, terminology differs between the Contract and the TAB Standard primarily because the intent of this Section is to use the industry standards specified, along with additional requirements listed herein to produce optimal results.

The following table of similar terms is provided for clarification only. Contract requirements take precedent over the corresponding AABC, NEBB, or TABB requirements where differences exist.

SIMILAR TERMS			
Contract Term	AABC Term	NEBB Term	TABB Term
TAB Standard	National Standards for Testing and Balancing Heating, Ventilating, and Air Conditioning Systems	Procedural Standards for Testing, Adjusting and Balancing of Environmental Systems	International Standards for Environmental Systems Balance
TAB Specialist	TAB Engineer	TAB Supervisor	TAB Supervisor
Systems Readiness Check	Construction Phase Inspection	Field Readiness Check & Preliminary Field Procedures	Field Readiness Check & Prelim. Field Procedures

1.3 WORK DESCRIPTION

The work includes duct air leakage testing (DALT) and testing, adjusting, and balancing (TAB) of new and existing heating, ventilating, and cooling (HVAC) air distribution systems including ducts, and piping which are located within, on, under, between, and adjacent to buildings.

Perform TAB in accordance with the requirements of the TAB procedural standard recommended by the TAB trade association that approved the TAB Firm's qualifications. Comply with requirements of AABC MN-1, NEBB PROCEDURAL STANDARDS, or SMACNA 1780 (TABB) as supplemented and modified by this specification section. All recommendations and suggested practices contained in the TAB procedural standards are considered mandatory.

Conduct DALT and TAB of the indicated existing systems and equipment and submit the specified DALT and TAB reports for approval. Conduct DALT testing in compliance with the requirements specified in SMACNA 1972 CD, except as supplemented and modified by this section. Conduct DALT and TAB work in accordance with the requirements of this section.

1.3.1 Air Distribution Systems

Test, adjust, and balance system (TAB) in compliance with this section. Obtain Contracting Officer's written approval before applying insulation to exterior of air distribution systems as specified under Section 23 07 00 THERMAL INSULATION FOR MECHANICAL SYSTEMS.

1.3.2 Water Distribution Systems

TAB system in compliance with this section. Obtain Contracting Officer's written approval before applying insulation to water distribution systems as specified under Section 23 07 00 THERMAL INSULATION FOR MECHANICAL SYSTEMS. At Contractor's option and with Contracting Officer's written approval, the piping systems may be insulated before systems are TAB'd.

Terminate piping insulation immediately adjacent to each flow control valve, automatic control valve, or device. Seal the ends of pipe insulation and the space between ends of pipe insulation and piping, with waterproof vapor barrier coating.

After completion of work under this section, insulate the flow control valves and devices as specified under Section 23 07 00 THERMAL INSULATION FOR MECHANICAL SYSTEMS.

1.3.3 Related Requirements

Requirements for price breakdown of HVAC TAB work are specified in Section 01 20 00.00 20 PRICE AND PAYMENT PROCEDURES.

Requirements for construction scheduling related to HVAC TAB work are specified in Section 01 32 17.00 20 COST LOADED NETWORK ANALYSIS SCHEDULES (NAS).

1.4 SUBMITTALS

Government approval is required for submittals with a "G" designation; submittals not having a "G" designation are for information only. When used, a designation following the "G" designation identifies the office that will review the submittal for the Government. Submittals with an "S" are for inclusion in the Sustainability Notebook, in conformance to Section 01 33 29 SUSTAINABILITY REPORTING. Submit the following in accordance with Section 01 33 00 SUBMITTAL PROCEDURES:

SD-07 Certificates

Independent TAB agency and personnel qualifications; G

Advance notice of Pre-Final DALT field work; G

Completed Pre-Final DALT Work Checklist; G

Advance Notice of Season 1 TAB Field Work; G

Completed Season 1 Pre-TAB Work Checklist

1.5 QUALITY ASSURANCE

1.5.1 Independent TAB Agency and Personnel Qualifications

To secure approval for the proposed agency, submit information certifying that the TAB agency is a first tier subcontractor who is not affiliated with any other company participating in work on this contract, including design, furnishing equipment, or construction. Further, submit the following, for the agency, to Contracting Officer for approval:

a. Independent AABC or NEBB or TABB TAB agency:

TAB agency: AABC registration number and expiration date of current certification; or NEBB certification number and expiration date of current certification; or TABB certification number and expiration date of current certification.

TAB team supervisor: Name and copy of AABC or NEBB or TABB TAB supervisor certificate and expiration date of current certification.

TAB team field leader: Name and documented evidence that the team field leader has satisfactorily performed full-time supervision of TAB work in the field for not less than 3 years immediately preceding this contract's bid opening date.

TAB team field technicians: Names and documented evidence that each field technician has satisfactorily assisted a TAB team field leader in performance of TAB work in the field for not less than one year immediately preceding this contract's bid opening date.

Current certificates: Registrations and certifications are current, and valid for the duration of this contract. Renew Certifications which expire prior to completion of the TAB work, in a timely manner so that there is no lapse in registration or certification. TAB agency or TAB team personnel without a current registration or current certification are not to perform TAB work on this contract.

b. TAB Team Members: TAB team approved to accomplish work on this contract are full-time employees of the TAB agency. No other personnel is allowed to do TAB work on this contract.

c. Replacement of TAB team members: Replacement of members may occur if each new member complies with the applicable personnel qualifications and each is approved by the Contracting Officer.

1.6 SEQUENCING AND SCHEDULING

1.6.1 DALT and TAB Submittal and Work Schedule

Comply with additional requirements specified in Appendix C: DALT AND TAB SUBMITTAL AND WORK SCHEDULE included at the end of this section

1.6.2 DALT and TAB Submittal and Work Schedule

Submit this schedule,and TAB Schematic Drawings, adapted for this particular contract, to the Contracting Officer (CO) for review and

approval. Include with the submittal the planned calendar dates for each submittal or work item. Resubmit an updated version for CO approval every 90 calendar days days. Compliance with the following schedule is the Contractor's responsibility.

Qualify TAB Personnel: Within 45 calendar days after date of contract award, submit TAB agency and personnel qualifications.

Pre-DALT/TAB Meeting: Within 30 calendar days after the date of approval of the TAB agency and personnel, meet with the COTR.

Design Review Report: Within 60 calendar days after the date of the TAB agency personnel qualifications approval, submit design review report.

Pre-Field DALT Preliminary Notification: On completion of the duct installation for each system, notify the Contracting Officer in writing within 5 days after completion.

Ductwork Selected for DALT: Within 7 calendar days of Pre-Field DALT Preliminary Notification, the COTR will select which of the project ductwork must be DALT'd.

DALT Field Work: Within 48 hours of COTR's selection, complete DALT field work on selected.

Submit Pre-final DALT Report: Within one working day after completion of DALT field work, submit Pre-final DALT Report. Separate Pre-final DALT reports may be submitted to allow phased testing from system to system.

DALT Work Field Check: Upon approval of the Pre-final DALT Report, schedule the COTR's DALT field check work with the Contracting Officer.

Submit Final DALT Report: Within 15 calendar days after completion of successful DALT Work Field Check, submit TAB report.

Pre-Field TAB Engineering Report: Within 10 calendar days after approval of the TAB agency Personnel Qualifications, submit the Pre-Field TAB Engineering Report.

Prerequisite HVAC Work Check Out List and Advanced Notice For TAB Field Work: At a minimum of 115 calendar days prior to CCD, submit prerequisite HVAC work check out list certified as complete, and submit advance notice of commencement of TAB field work.

TAB Field Work: At a minimum of 90calendar days prior to CCD, accomplish TAB field work.

Submit TAB Report: Within 15 calendar days after completion of TAB field work, submit TAB report.

TAB Field Check: 30 calendar days after TAB report is approved by the Contracting Officer, conduct field check.

Complete TAB Work: Prior to CCD, complete all TAB work .

TAB Field Work: At a minimum of 90 calendar days prior to CCD, accomplish TAB field work; submit TAB report; and conduct field check.

Complete TAB Work: Prior to CCD, complete all TAB work .

1.6.2.1 Design Review Report

Submit typed report describing omissions and deficiencies in the HVAC system's design that would preclude the TAB team from accomplishing the duct leakage testing work and the TAB work requirements of this section. Provide a complete explanation including supporting documentation detailing the design deficiency. State that no deficiencies are evident if that is the case.

1.6.2.2 Pre-Field DALT Preliminary Notification

Notification: On completion of the installation of each duct system indicated to be DALT'd, notify the Contracting Officer in writing within 7 calendar days after completion.

1.6.2.3 Pre-Field TAB Engineering Report

Submit report containing the following information:

a. Step-by-step TAB procedure:

(1) Strategy: Describe the method of approach to the TAB field work from start to finish. Include in this description a complete methodology for accomplishing each seasonal TAB field work session.

(2) Air System Diagrams: Use the contract drawings and duct fabrication drawings if available to provide air system diagrams in the report showing the location of all terminal outlet supply, return, exhaust and transfer registers, grilles and diffusers. Use a key numbering system on the diagrams which identifies each outlet contained in the outlet airflow report sheets. Show intended locations of all traverses and static pressure readings.

(3) Procedural steps: Delineate fully the intended procedural steps to be taken by the TAB field team to accomplish the required TAB work of each air distribution system and each water distribution system. Include intended procedural steps for TAB work for subsystems and system components.

b. Pre-field data: Submit AABC or NEBB or SMACNA 1780 data report forms with the following pre-field information filled in:

(1) Design data obtained from system drawings, specifications, and approved submittals.

(2) Notations detailing additional data to be obtained from the contract site by the TAB field team.

(3) Designate the actual data to be measured in the TAB field work.

(4) Provide a list of the types of instruments, and the measuring range of each, which are anticipated to be used for measuring in the TAB field work. By means of a keying scheme, specify on each TAB data report form submitted, which instruments will be used for measuring each item of TAB data. If the selection of which instrument to use, is to be made in the field, specify from which

instruments the choice will be made. Place the instrument key number in the blank space where the measured data would be entered.

c. Prerequisite HVAC work checkout list: Provide a list of inspections and work items which are to be completed by the Contractor. This list must be acted upon and completed by the Contractor and then submitted and approved by the Contracting Officer prior to the TAB team coming to the contract site.

At a minimum, a list of the applicable inspections and work items listed in the NEBB PROCEDURAL STANDARDS, Section III, "Preliminary TAB Procedures" under paragraphs titled, "Air Distribution System Inspection" and "Hydronic Distribution System Inspection" must be provided for each separate system to be TAB'd.

1.7 SUBCONTRACTOR SPECIAL REQUIREMENTS

Perform all work in this section in accordance with the paragraph entitled "Subcontractor Special Requirements" in Section 01 30 00 ADMINISTRATIVE REQUIREMENTS, stating that all contract requirements of this section must be accomplished directly by a first tier subcontractor. No work may be performed by a second tier subcontractor.

PART 2 PRODUCTS

Not Used

PART 3 EXECUTION

3.1 WORK DESCRIPTIONS OF PARTICIPANTS

Comply with requirements of this section as specified in Appendix A WORK DESCRIPTIONS OF PARTICIPANTS.

3.2 PRE-DALT/TAB MEETING

Meet with the Contracting Officer's technical representative (COTR) to develop a mutual understanding relative to the details of the DALT work and TAB work requirements. Ensure that the TAB supervisor is present at this meeting. Requirements to be discussed include required submittals, work schedule, and field quality control.

3.3 DALT PROCEDURES

3.3.1 Instruments, Consumables and Personnel

Provide instruments, consumables and personnel required to accomplish the DALT field work. Follow the same basic procedure specified below for TAB Field Work, including maintenance and calibration of instruments, accuracy of measurements, preliminary procedures, field work, workmanship and treatment of deficiencies. Calibrate and maintain instruments in accordance with manufacturer's written procedures.

3.3.2 Advance Notice of Pre-Final DALT Field Work

On completion of the installation of each duct system indicated to be DALT'd, notify the Contracting Officer in writing prior to the COTR's duct selection field visit.

3.3.3 Ductwork To Be DALT'd

From each duct system indicated as subject to DALT, the COTR will randomly select sections of each completed duct system for testing by the Contractor's TAB Firm. The sections selected will not exceed 20 percent of the total measured linear footage of duct systems indicated as subject to DALT. Sections of duct systems subject to DALT will include 20 percent of main ducts, branch main ducts, branch ducts and plenums for supply, return, exhaust, and plenum ductwork.

3.3.4 DALT Testing

Perform DALT on the HVAC duct sections of each system as selected by the COTR. Use the duct class, seal class, leakage class and the leak test pressure data indicated on the drawings, to comply with the procedures specified in SMACNA 1972 CD.

In spite of specifications of SMACNA 1972 CD to the contrary, DALT ductwork of construction class of 3-inch water gauge static pressure and below if indicated to be DALT'd. Complete DALT work on the COTR selected ductwork within 48 hours after the particular ductwork was selected for DALT. Separately conduct DALT work for large duct systems to enable the DALT work to be completed in 48 hours.

3.3.5 Pre-final DALT Report

After completion of the DALT work, prepare a Pre-final DALT Report meeting the additional requirements specified in Appendix B REPORTS - DALT and TAB. Data required by those data report forms shall be furnished by the TAB team. Prepare the report neatly and legibly; the Pre-final DALT report shall provide the basis for the Final DALT Report.

TAB supervisor shall review, approve and sign the Pre-Final DALT Report and submit this report within one day of completion of DALT field work. Verbally notify the COTR that the field check of the Pre-Final DALT Report data can commence.

3.3.6 Quality Assurance - COTR DALT Field Acceptance Testing

In the presence of the COTR and TAB team field leader, verify for accuracy Pre-final DALT Report data selected by the COTR. For each duct system, this acceptance testing shall be conducted on a maximum of 50 percent of the duct sections DALT'd.

Further, if any data on the Pre-final DALT report form for a given duct section is out-of-tolerance, then field acceptance testing shall be conducted on data for one additional duct section, preferably in the same duct system, in the presence of the COTR.

3.3.7 Additional COTR Field Acceptance Testing

If any of the duct sections checked for a given system are determined to have a leakage rate measured that exceeds the leakage rate allowed by SMACNA Leak Test Manual for an indicated duct construction class and sealant class, terminate data checking for that section. The associated Pre-final DALT Report data for the given duct system will be disapproved. Make the necessary corrections and prepare a revised Pre-final DALT

Report. Reschedule a field check of the revised report data with the COTR.

3.3.8 Certified Final DALT Report

On successful completion of all field checks of the Pre-Final DALT Report data for all systems, the TAB Supervisor shall assemble, review, approve, sign and submit the Final DALT Report in compliance with Appendix B REPORTS - DALT and TAB to the Contracting Officer for approval.

3.3.9 Prerequisite for TAB Field Work

Do not commence TAB field work prior to the completion and approval, for all systems, of the Final DALT Report.

3.4 TAB PROCEDURES

3.4.1 TAB Field Work

Test, adjust, and balance the HVAC systems until measured flow rates (air and water flow) are within plus or minus 5 percent of the design flow rates as specified or indicated on the contract documents.

That is, comply with the the requirements of AABC MN-1 , or SMACNA 1780 (TABB) and SMACNA 1858 (TABB),except as supplemented and modified by this section.

Provide instruments and consumables required to accomplish the TAB work. Calibrate and maintain instruments in accordance with manufacturer's written procedures.

Test, adjust, and balance the HVAC systems until measured flow rates (air and water flow) are within plus or minus 5 percent of the design flow rates as specified or indicated on the contract documents. Conduct TAB work, including measurement accuracy, and sound measurement work in conformance with the AABC MN-1 and AABC MN-4, or NEBB TABES and NEBB MASV, or SMACNA 1780 (used by TABB) and SMACNA 1858 sound measurement procedures, except as supplemented and modified by this section.

3.4.2 Preliminary Procedures

Use the approved pre-field engineering report as instructions and procedures for accomplishing TAB field work. TAB engineer is to locate, in the field, test ports required for testing. It is the responsibility of the sheet metal contractor to provide and install test ports as required by the TAB engineer.

3.4.3 TAB Air Distribution Systems

3.4.3.1 Units With Coils

Report heating and cooling performance capacity tests for hot water, chilled water, DX and steam coils for the purpose of verifying that the coils meet the indicated design capacity. Submit the following data and calculations with the coil test reports:

a. For air handlers with capacities greater than 7.5 tons (90,000 Btu)

cooling, such as factory manufactured units, central built-up units and rooftop units, conduct capacity tests in accordance with AABC MN-4, procedure 3.5, "Coil Capacity Testing."

Do not determine entering and leaving wet and dry bulb temperatures by single point measurement, but by the average of multiple readings in compliance with paragraph 3.5-5, "Procedures", (in subparagraph d.) of AABC MN-4, Procedure 3.5, "Coil Capacity Testing."

Submit part-load coil performance data from the coil manufacturer converting test conditions to design conditions; use the data for the purpose of verifying that the coils meet the indicated design capacity in compliance with AABC MN-4, Procedure 3.5, "Coil Capacity Testing," paragraph 3.5.7, "Actual Capacity Vs. Design Capacity" (in subparagraph c.).

b. For units with capacities of 7.5 tons (90,000 Btu) or less, such as fan coil units, duct mounted reheat coils associated with VAV terminal units, and unitary units, such as through-the-wall heat pumps:

Determine the apparent coil capacity by calculations using single point measurement of entering and leaving wet and dry bulb temperatures; submit the calculations with the coil reports.

3.4.3.2 Air Handling Units

Air handling unit systems including fans (air handling unit fans, exhaust fans and winter ventilation fans), coils, ducts, plenums, mixing boxes, terminal units, variable air volume boxes, and air distribution devices for supply air, return air, outside air, mixed air relief air, and makeup air.

3.4.3.3 Rooftop Air Conditioning

Rooftop air conditioning systems including fans, coils, ducts, plenums, and air distribution devices for supply air, return air, and outside air.

For refrigeration compressors/condensers/condensing units/evaporators, report data as required by NEBB, AABC, and TABB standard procedures, including refrigeration operational data.

3.4.3.4 Heating and Ventilating Units

Heating and ventilating unit systems including fans, coils, ducts, plenums, roof vents, registers, diffusers, grilles, and louvers for supply air, return air, outside air, and mixed air.

3.4.3.5 Makeup Air Units

Makeup air unit systems including fans, coils, ducts, plenums, registers, diffusers, grilles, and louvers for supply air, return air, outside air, and mixed air.

3.4.3.6 Return Air Fans

Return air fan system including fan ducts, plenums, registers, diffusers, grilles, and louvers for supply air, return air, outside air, and mixed air.

3.4.3.7 Fan Coils

Fan coil unit systems including fans, coils, ducts, plenums, and air distribution devices for supply air, return air, and outside air.

3.4.3.8 Exhaust Fans

Exhaust fan systems including fans, ducts, plenums, grilles, and hoods for exhaust air.

3.4.4 TAB Water Distribution Systems

3.4.4.1 Chilled Water

Chilled water systems including chillers, condensers, cooling towers, pumps, coils, system balance valves and flow measuring devices.

For water chillers, report data as required by AABC, NEBB and TABB standard procedures, including refrigeration operational data.

3.4.4.2 Heating Hot Water

Heating hot water systems including boilers, hot water converters (e.g., heat exchangers), pumps, coils, system balancing valves and flow measuring devices.

3.4.4.3 Dual Temperature Water

Dual temperature water systems including boilers, converters, chillers, condensers, cooling towers, pumps, coils, and system balancing valves, and flow measuring devices.

3.4.5 Sound Measurement Work

3.4.5.1 Areas To Be Sound Measured

In the following spaces, measure and record the sound power level for each octave band listed in ASHRAE HVAC APP IP HDBK Noise Criteria:

a. All HVAC mechanical rooms, including machinery spaces and other spaces containing HVAC power drivers and power driven equipment.

b. All spaces sharing a common barrier with each mechanical room, including rooms overhead, rooms on the other side of side walls, and rooms beneath the mechanical room floor.

3.4.5.2 Procedure

Measure sound levels in each room, when unoccupied except for the TAB team, with all HVAC systems that would cause sound readings in the room operating in their noisiest mode. Record the sound level in each octave band. Attempt to mitigate the sound level and bring the level to within the specified ASHRAE HVAC APP IP HDBK noise criteria goals, if such mitigation is within the TAB team's control. State in the report the ASHRAE HVAC APP IP HDBK noise criteria goals. If sound level cannot be brought into compliance, provide written notice of the deficiency to the Contractor for resolution or correction.

3.4.5.3 Timing

Measure sound levels at times prescribed by AABC or NEBB or TABB.

3.4.5.4 Meters

Measure sound levels with a sound meter complying with ASA S1.4, Type 1 or 2, and an octave band filter set complying with ASA S1.11 PART 1. Use measurement methods for overall sound levels and for octave band sound levels as prescribed by NEBB.

3.4.5.5 Calibration

Calibrate sound levels as prescribed by AABC or NEBB or TABB, except that calibrators emitting a sound pressure level tone of 94 dB at 1000 hertz (Hz) are also acceptable.

3.4.5.6 Background Noise Correction

Determine background noise component of room sound (noise) levels for each (of eight) octave bands as prescribed by AABC or NEBB or TABB.

3.4.6 TAB Work on Performance Tests Without Seasonal Limitations

3.4.6.1 Performance Tests

In addition to the TAB proportionate balancing work on the air distribution systems and the water distribution systems, accomplish TAB work on the HVAC systems which directly transfer thermal energy. TAB the operational performance of the heating systemsandcooling systems.

3.4.6.2 Ambient Temperatures

On each tab report form used for recording data, record the outdoor and indoor ambient dry bulb temperature range and the outdoor and indoor ambient wet bulb temperature range within which the report form's data was recorded. Record these temperatures at beginning and at the end of data taking.

3.4.7 TAB Work on Performance Tests With Seasonal Limitations

3.4.7.1 Performance Tests

Accomplish proportionate balancing TAB work on the air distribution systems and water distribution systems, in other words, accomplish adjusting and balancing of the air flows and water flows, any time during the duration of this contract, subject to the limitations specified elsewhere in this section. However, accomplish, within the following seasonal limitations, TAB work on HVAC systems which directly transfer thermal energy.

3.4.7.2 Season Of Maximum Load

Visit the contract site for at least two TAB work sessions for TAB field measurements. , the goal being to TAB the operational performance of the heating systems and cooling systems under their respective maximum outdoor environment-caused loading. During the seasonal limitations, TAB the operational performance of the heating systems and cooling systems.

3.4.7.3 Ambient Temperatures

On each tab report form used for recording data, record the outdoor and indoor ambient dry bulb temperature range and the outdoor and indoor ambient wet bulb temperature range within which the report form's data was recorded. Record these temperatures at beginning and at the end of data taking.

3.4.7.4 Sound Measurements

Comply with paragraph entitled "Sound Measurement Work," specifically, the requirement that a room must be operating in its noisiest mode at the time of sound measurements in the room. The maximum noise level measurements could depend on seasonally related heat or cooling transfer equipment.

3.4.8 Deficiencies

Strive to meet the intent of this section to maximize the performance of the equipment as designed and installed. However, if deficiencies in equipment design or installation prevent TAB work from being accomplished within the range of design values specified in the paragraph entitled "Workmanship," provide written notice as soon as possible to the Contractor and the Contracting Officer describing the deficiency and recommended correction.

Responsibility for correction of installation deficiencies is the Contractor's. If a deficiency is in equipment design, call the TAB team supervisor for technical assistance. Responsibility for reporting design deficiencies to Contractor is the TAB team supervisor's.

3.4.9 TAB Reports

Additional requirements for TAB Reports are specified in Appendix B REPORTS - DALT and TAB

3.4.10 Quality Assurance - COTR TAB Field Acceptance Testing

3.4.10.1 TAB Field Acceptance Testing

During the field acceptance testing, verify, in the presence of the COTR, random selections of data (water, air quantities, air motion,) recorded in the TAB Report. Points and areas for field acceptance testing are to be selected by the COTR. Measurement and test procedures are the same as approved for TAB work for the TAB Report.

Field acceptance testing includes verification of TAB Report data recorded for the following equipment groups:

Group 1: All chillers, boilers, return fans, computer room units, and air handling units (rooftop and central stations).

Group 2: 25 percent of the VAV terminal boxes and associated diffusers and registers.

Group 3: 25 percent of the supply diffusers, registers, grilles associated with constant volume air handling units.

Group 4: 25 percent of the return grilles, return registers, exhaust grilles and exhaust registers.

Group 5: 25 percent of the supply fans, exhaust fans, and pumps.

Further, if any data on the TAB Report for Groups 2 through 5 is found not to fall within the range of plus 5 to minus 5 percent of the TAB Report data, additional group data verification is required in the presence of the COTR. Verify TAB Report data for one additional piece of equipment in that group. Continue this additional group data verification until out-of-tolerance data ceases to be found.

3.4.10.2 Additional COTR TAB Field Acceptance Testing

If any of the acceptance testing measurements for a given equipment group is found not to fall within the range of plus 5 to minus 5 percent of the TAB Report data, terminate data verification for all affected data for that group. The affected data for the given group will be disapproved. Make the necessary corrections and prepare a revised TAB Report. Reschedule acceptance testing of the revised report data with the COTR.

3.4.10.3 Prerequisite for Approval

Compliance with the field acceptance testing requirements of this section is a prerequisite for the final Contracting Officer approval of the TAB Report submitted.

3.5 MARKING OF SETTINGS

Upon the final TAB work approval, permanently mark the settings of HVAC adjustment devices including valves, gauges, splitters, and dampers so that adjustment can be restored if disturbed at any time. Provide permanent markings clearly indicating the settings on the adjustment devices which result in the data reported on the submitted TAB report.

3.6 MARKING OF TEST PORTS

The TAB team is to permanently and legibly mark and identify the location points of the duct test ports. If the ducts have exterior insulation, make these markings on the exterior side of the duct insulation. Show the location of test ports on the as-built mechanical drawings with dimensions given where the test port is covered by exterior insulation.

3.7 APPENDICES

Appendix A WORK DESCRIPTIONS OF PARTICIPANTS
Appendix B REPORTS - DALT and TAB
Appendix C DALT AND TAB SUBMITTAL AND WORK SCHEDULE
Appendix D REQUIREMENTS FOR DUCT AIR LEAK TESTING

Appendix A

WORK DESCRIPTIONS OF PARTICIPANTS

The Contractor is responsible for ensuring compliance with all requirements of this specification section. However, the following delineation of specific work items is provided to facilitate and co-ordinate execution of the various work efforts by personnel from separate organizations.

1. Contractor

a. HVAC documentation: Provide pertinent contract documentation to the TAB Firm, to include the following: the contract drawings and specifications; copies of the approved submittal data for all HVAC equipment, air distribution devices, and air/water measuring/balancing devices; the construction work schedule; and other applicable documents requested by the TAB Firm. Provide the TAB Firm copies of contract revisions and modifications as they occur.

b. Schedules: Ensure the requirements specified under the paragraph "DALT and TAB Schedule" are met.

c. Pre-DALT and TAB meeting: Arrange and conduct the Pre-DALT and TAB meeting. Ensure that a representative is present for the sheet metal contractor, the mechanical contractor, the electrical contractor, and the automatic temperature controls contractor.

d. Coordinate Support: Provide and coordinate support personnel required by the TAB Firm in order to accomplish the DALT and TAB field work. Support personnel may include factory representatives, HVAC controls installers, HVAC equipment mechanics, sheet metal workers, pipe fitters, and insulators. Ensure support personnel are present at the work site at the times required.

e. Correct Deficiencies: Ensure the notifications of Construction Deficiencies are provided as specified herein. Refer to the paragraph entitled "Construction Deficiencies." Correct each deficiency as soon as practical with the Contracting Officer, and submit revised schedules and other required documentation.

f. Pre-TAB Work Checklists: Complete check out and debugging of HVAC equipment, ducts, and controls prior to the TAB engineer arriving at the project site to begin the TAB work. Debugging includes searching for and eliminating malfunctioning elements in the HVAC system installations, and verifying all adjustable devices are functioning as designed. Include as pre-TAB work checklist items, the deficiencies pointed out by the TAB team supervisor in the design review report.

Prior to the TAB field team's arrival, ensure completion of the applicable inspections and work items listed in the TAB team supervisor's DALT and TAB Work Procedures Summary. Do not allow the TAB team to commence TAB field work until all of the following are completed.

g. Give Notice of Testing: Submit advance notice of TAB field work accompanied by completed prerequisite HVAC Work List

h. Insulation work: Ensure that no insulation is shall not be installed on ducts to be DALT'd until DALT work on the subject ducts is complete.

Ensure the duct and piping systems are properly insulated and vapor sealed upon the successful completion and acceptance of the DALT and TAB work.

2. TAB Team Supervisor

a. Overall management: Supervise and manage the overall TAB team work effort, including preliminary and technical DALT and TAB procedures and TAB team field work.

b. Schedule: Ensure the requirements specified under the paragraph "DALT and TAB Schedule" are met.

c. Submittals: Provide the submittals specified herein.

d. Pre-DALT/TAB meeting: Attend meeting with Contractor. Ensure TAB personnel that will be involved in the TAB work under this contract attend the meeting.

e. Design Review Report: Submit typed report describing omissions and deficiencies in the HVAC system's design that would preclude the TAB team from accomplishing the duct leakage testing work and the TAB work requirements of this section. Provide a complete explanation including supporting documentation detailing the design deficiency. State that no deficiencies are evident if that is the case.

f. Support required: Specify the technical support personnel required from the Contractor other than the TAB agency; such as factory representatives for temperature controls or for complex equipment. Inform the Contractor in writing of the support personnel needed and when they are needed. Furnish the notice as soon as the need is anticipated, either with the design review report, or the DALT and TAB Procedures Summary, the during the DALT or TAB field work.

Ensure the Contractor is properly notified and aware of all support personnel needed to perform the TAB work. Maintain communication with the Contractor regarding support personnel throughout the duration of the TAB field work, including the TAB field acceptance testing checking.

Ensure all inspections and verifications for the Pre-Final DALT and Pre-TAB Checklists are completely and successfully conducted before DALT and TAB field work is performed.

g. Advance Notice: Monitor the completion of the duct system installations and provide the Advance Notice for Pre-Final DALT field work as specified herein.

h. Technical Assistance: Provide technical assistance to the DALT and TAB field work.

i. Deficiencies Notification: Ensure the notifications of Construction Deficiencies are provided as specified herein. Comply with requirements of the paragraph entitled "Construction Deficiencies." Resolve each deficiency as soon as practical and submit revised schedules and other required documentation.

j. Procedures: Develop the required TAB procedures for systems or system components not covered in the TAB Standard.

3. TAB Team Field Leader

a. Field manager: Manage, in the field, the accomplishment of the work specified in Part 3, "Execution."

b. Full time: Be present at the contract site when DALT field work or TAB field work is being performed by the TAB team; ensure day-to-day TAB team work accomplishments are in compliance with this section.

c. Prerequisite HVAC work: Do not bring the TAB team to the contract site until a copy of the prerequisite HVAC work list, with all work items certified by the Contractor to be working as designed, reaches the office of the TAB Agency.

Appendix B

REPORTS - DALT and TAB

All submitted documentation must be typed, neat, and organized. All reports must have a waterproof front and back cover, a title page, a certification page, sequentially numbered pages throughout, and a table of contents. Tables, lists, and diagrams must be titled. Generate and submit for approval the following documentation:

1. DALT and TAB Work Execution Schedule

Submit a detailed schedule indicating the anticipated calendar date for each submittal and each portion of work required under this section. For each work entry, indicate the support personnel (such as controls provider, HVAC mechanic, etc.) that are needed to accomplish the work. Arrange schedule entries chronologically.

2. DALT and TAB Procedures Summary

Submit a detailed narrative describing all aspects of the DALT and TAB field work to be performed. Clearly distinguish between DALT information and TAB information. Include the following:

a. A list of the intended procedural steps for the DALT and TAB field work from start to finish. Indicate how each type of data measurement will be obtained. Include what Contractor support personnel are required for each step, and the tasks they need to perform.

b. A list of the project's submittals that are needed by the TAB Firm in order to meet this Contract's requirements.

c. The schematic drawings to be used in the required reports, which may include building floor plans, mechanical room plans, duct system plans, and equipment elevations. Indicate intended TAB measurement locations, including where test ports need to be provided by the Contractor.

d. The data presentation forms to be used in the report, with the preliminary information and initial design values filled in.

e. A list of DALT and TAB instruments to be used, edited for this project, to include the instrument name and description, manufacturer, model number, scale range, published accuracy, most recent calibration date, and what the instrument will be used for on this project.

f. A thorough checklist of the work items and inspections that need to be accomplished before DALT field work can be performed. The Contractor must complete, submit, and receive approval of the Completed Pre-Final DALT Work Checklist before DALT field work can be accomplished.

g. A thorough checklist of the work items and inspections that need to be accomplished before the TAB field work can be performed. The Contractor must complete, submit, and receive approval of the Completed Pre-TAB Work Checklist before the TAB field work can be accomplished.

h. A thorough checklist of the work items and inspections that need to be accomplished before the Season 2 TAB field work can be performed. The

Contractor must complete, submit, and receive approval of the Completed Season 2 Pre-TAB Work Checklist before the Season 2 TAB field work can be accomplished.

i. The checklists specified above shall be individually developed and tailored specifically for the work under this contract. Refer to NEBB PROCEDURAL STANDARDS, Section III, "Preliminary TAB Procedures" under the paragraphs titled, "Air Distribution System Inspection" and "Hydronic Distribution System Inspection" for examples of items to include in the checklists.

3. Design Review Report

Submit report containing the following information:

a. Review the contract specifications and drawings to verify that the TAB work can be successfully accomplished in compliance with the requirements of this section. Verify the presence and location of permanently installed test ports and other devices needed, including gauge cocks, thermometer wells, flow control devices, circuit setters, balancing valves, and manual volume dampers.

b. Submit a typed report describing omissions and deficiencies in the HVAC system's design that would preclude the TAB team from accomplishing the DALT work and the TAB work requirements of this section. Provide a complete explanation including supporting documentation detailing the design deficiency. If no deficiencies are evident, state so in the report.

4. Pre-Final DALT Report for COTR DALT Field Checks

Report the data for the Pre-Final DALT Report meeting the following requirements:

a. Submit a copy of the approved DALT and TAB Procedures Summary: Provide notations describing how actual field procedures differed from the procedures listed.

b. Report format: Submit a comprehensive report for the DALT field work data using data presentation forms equivalent to the "Air Duct Leakage Test Summary Report Forms" located in the SMACNA 1972 CD. In addition, submit in the report, a marked duct shop drawing which identifies each section of duct tested with assigned node numbers for each section. Node numbers shall be included in the completed report forms to identify each duct section.

c. Calculations: Include a copy of all calculations prepared in determining the duct surface area of each duct test section. Include in the DALT reports copy(s) of the calibration curve for each of the DALT test orifices used for testing.

d. Instruments: List the types of instruments actually used to measure the data. Include in the listing each instrument's unique identification number, calibration date, and calibration expiration date. Instruments are to be calibrated within one year of the date of use in the field; instrument calibration is to be traceable to the measuring standards of the National Institute of Standards and Technology.

e. TAB Supervisor Approval: Include on the submitted report the typed name of the TAB supervisor and the dated signature of the TAB supervisor.

5. Final DALT Report

On successful completion of all COTR field checks of the Pre-final DALT Report data for all systems, the TABS Supervisor shall assemble, review, sign and submit the Final DALT Report to the Contracting Officer for approval.

6. TAB Reports: Submit TAB Report for Season 1 and TAB Report for Season 2 in the following manner:

a. Procedure Summary: Submit a copy of the approved DALT and TAB Procedures Summary. When applicable, provide notations describing how actual field procedures differed from the procedures listed.

b. Report format: Submit the completed data forms approved in the pre-field TAB Engineering Report completed by TAB field team, reviewed, approved and signed by the TAB supervisor. Bind the report with a waterproof front and back cover. Include a table of contents identifying by page number the location of each report. Report forms and report data shall be typewritten. Handwritten report forms or report data are not acceptable.

c. Temperatures: On each TAB report form reporting TAB work accomplished on HVAC thermal energy transfer equipment, include the indoor and outdoor dry bulb temperature range and indoor and outdoor wet bulb temperature range within which the TAB data was recorded. Include in the TAB report continuous time versus temperature recording data of wet and dry bulb temperatures for the rooms, or zones, as designated in the following list:

(1) Data shall be measured and compiled on a continuous basis for the period in which TAB work affecting those rooms is being done.

(2) Data shall be measured/recorded only after the HVAC systems installations are complete, the systems fully balanced and the HVAC systems controls operating in fully automatic mode. Provide a detailed explanation wherever a final measurement did not achieve the required value.

(3) Data may be compiled using direct digital controls trend logging where available. Otherwise, the Contractor shall temporarily install calibrated time versus temperature/humidity recorders for this purpose. The HVAC systems and controls shall have been fully operational a minimum of 24 hours in advance of commencing data compilation. The specified data shall be included in the .

d. Air System Diagrams: Provided updated diagrams with final installed locations of all terminals and devices, any numbering changes, and actual test locations.

e. Air Static Pressure Profiles: Report static pressure profiles for air duct systems including: Air Handlers, Rooftop Units, Makeup Air Units, and Exhaust Fans. Report static pressure data for all supply, return, relief, exhaust and outside air ducts for the systems listed. The

static pressure report data shall include, in addition to AABC or NEBB or TABB required data, the following:

(1) Report supply fan, return fan, relief fan, and exhaust fan inlet and discharge static pressures.

(2) Report static pressure drop across chilled water coils, DX coils, hot water coils, steam coils, electric resistance heating coils and heat reclaim devices installed in unit cabinetry or the system ductwork.

(3) Report static pressure drop across outside air, return air, and supply air automatic control dampers, both proportional and two-position, installed in unit cabinetry.

(4) Report static pressure drop across air filters, acoustic silencers, moisture eliminators, air flow straighteners, air flow measuring stations or other pressure drop producing specialty items installed in unit cabinetry, or in the system ductwork. Examples of these specialty items are smoke detectors, white sound generators, RF shielding, wave guides, security bars, blast valves, small pipes passing through ductwork, and duct mounted humidifiers.

Do not report static pressure drop across duct fittings provided for the sole purpose of conveying air, such as elbows, transitions, offsets, plenums, manual dampers, and branch takes-offs.

(5) Report static pressure drop across outside air and relief/exhaust air louvers.

(6) Report static pressure readings of supply air, return air, exhaust/relief air, and outside air in duct at the point where these ducts connect to each air moving unit.

f. Duct Transverses: Report duct traverses for main supply, return, exhaust, relief and outside air ducts. This shall include all ducts, including those which lack 7 1/2 duct diameters upstream and 2 1/2 duct diameters downstream of straight duct unobstructed by duct fittings/offsets/elbows. The TAB Agency shall evaluate and report findings on the duct traverses taken. Evaluate the suitability of the duct traverse measurement based on satisfying the qualifications for a pitot traverse plane as defined by AMCA 203, "Field Measurements", Section 8, paragraph 8.3, "Location of Traverse Plane".

g. Instruments: List the types of instruments actually used to measure the tab data. Include in the listing each instrument's unique identification number, calibration date, and calibration expiration date.

Instrumentation, used for taking wet bulb temperature readings shall provide accuracy of plus or minus 5 percent at the measured face velocities. Submit instrument manufacturer's literature to document instrument accuracy performance is in compliance with that specified.

h. Performance Curves: The TAB Supervisor shall include, in the TAB Reports, factory pump curves and fan curves for pumps and fans TAB'd on the job.

i. Calibration Curves: The TAB Supervisor shall include, in the TAB Reports, a factory calibration curve for installed flow control balancing valves, flow venturis and flow orifices TAB'd on the job.

j. Data From TAB Field Work: After completion of the TAB field work, prepare the TAB field data for TAB supervisor's review and approval signature, using the reporting forms approved in the pre-field engineering report. Data required by those approved data report forms shall be furnished by the TAB team. Except as approved otherwise in writing by the Contracting Officer, the TAB work and thereby the TAB report shall be considered incomplete until the TAB work is accomplished to within the accuracy range specified in the paragraph entitled "Workmanship."

Appendix C

DALT AND TAB SUBMITTAL AND WORK SCHEDULE

Perform the following items of work in the order listed adhering to the dates schedule specified below. Include the major items listed in this schedule in the project network analysis schedule required by Section 01 32 17.00 20 COST-LOADED NETWORK ANALYSIS SCHEDULES (NAS).

Submit TAB Agency and TAB Personnel Qualifications: Within 42 calendar days after date of contract award.

Submit the DALT and TAB Work Execution Schedule: within 14 days after receipt of the TAB agency and TAB personnel qualifications approval. Revise and re-submit this schedule 28 days prior to commencement of DALT work and 28 days prior to the commencement of TAB Season 1 work and TAB Season 2 work.

Submit the DALT and TAB Work Procedures Summary: within 14 days after receipt of the initial approved DALT and TAB Work Execution Schedule.

Meet with the COTR at the Pre-DALT/TAB Meeting: Within 28 calendar days after receipt of the approved initial DALT/TAB Execution Schedule.

Submit Design Review Report: Within 56 calendar days after the receipt of the approved initial DALT and TAB Work Execution Schedule.

Conduct measurements and submit the Record of Existing Facility Conditions: within 28 days after receipt of approved DALT and TAB Work Procedures Summary.

Advance Notice of Pre-Final DALT Field Work: After the completed installation of the HVAC duct system to be DALT'd, submit to the Contracting Officer an Advance Notice of Pre-Final DALT Field Work accompanied by the completed Pre-Final DALT Work Checklistchecklist for the subject duct system.

Ductwork Selected for DALT: Within 14 calendar days after receiving an acceptable completed Pre-Final DALT Work Checklist, the Contracting Officer's technical representative (COTR) will select the project ductwork sections to be DALT'd.

DALT Field Work: Within 48 hours of COTR's selection, complete DALT field work on selected project ductwork.

Submit Pre-Final DALT Report: Within two working days after completion of DALT field work, submit Pre-final DALT Report. Separate Pre-final DALT reports may be submitted to allow phased testing from system to system.

Quality Assurance - COTR DALT Field Checks: Upon approval of the Pre-final DALT Report, the COTR's DALT field check work shall be scheduled with the Contracting Officer.

Submit Final DALT Report: Within 14 calendar days after completion of successful DALT Work Field Check, submit TAB report.

Advance Notice of TAB Field Work: At a minimum of 14 calendar days prior to TAB Field Work, submit advance notice of TAB field work accompanied

by completed
Pre-TAB Work Checklist.

TAB Field Work: At a minimum of 84 calendar days prior to CCD, accomplish TAB field work.

Submit TAB Report: Within 14 calendar days after completion of TAB field work, submit initial TAB report.

Quality Assurance - COTR TAB Field Check: 30 calendar days after initial TAB report is approved by the Contracting Officer, conduct field check.

Complete TAB Work: Prior to CCD, complete all TAB work and submit final.

Receive the approved TAB report: Within 21 calendar days, receive the report from Contracting Officer approved TAB report.

Advance Notice of Season 2 TAB Field Work: At a minimum of 126 calendar days after CCD, submit advance notice of Season 2 TAB field work accompanied by completed Season 2 Pre-TAB Work Checklist.

Receive the approved TAB report: Within calendar 21 days, receive the report from Contracting Officer.

-- End of Section --

SECTION 23 08 00.00 10

COMMISSIONING OF HVAC SYSTEMS
01/08

PART 1 GENERAL

1.1 REFERENCES

The publications listed below form a part of this specification to the extent referenced. The publications are referred to within the text by the basic designation only.

ASSOCIATED AIR BALANCE COUNCIL (AABC)

ACG Commissioning Guideline (2005) Commissioning Guideline

NATIONAL ENVIRONMENTAL BALANCING BUREAU (NEBB)

NEBB Commissioning Standard (2009) Procedural Standards for Whole Building Systems Commissioning of New Construction; 3rd Edition

SHEET METAL AND AIR CONDITIONING CONTRACTORS' NATIONAL ASSOCIATION (SMACNA)

SMACNA 1429 (1994) HVAC Systems Commissioning Manual, 1st Edition

U.S. GREEN BUILDING COUNCIL (USGBC)

LEED BD+C (2009; R 2010) Leadership in Energy and Environmental Design(tm) Building Design and Construction (LEED-NC)

1.2 DEFINITIONS

In some instances, terminology differs between the Contract and the Commissioning Standard primarily because the intent of this Section is to use the industry standards specified, along with additional requirements listed herein to produce optimal results. The following table of similar terms is provided for clarification only. Contract requirements take precedent over the corresponding ACG, NEBB, or TABB requirements where differences exist.

SIMILAR TERMS			
Contract Term	ACG	NEBB	TABB
Commissioning Standard	ACG Commissioning Guideline	Procedural Standards for Building Systems Commissioning	SMACNA HVAC Commissioning Guidelines

SIMILAR TERMS			
Contract Term	ACG	NEBB	TABB
Commissioning Specialist	ACG Certified Commissioning Agent	NEBB Qualified Commissioning Administrator	TABB Certified Commissioning Supervisor

1.3 SYSTEM DESCRIPTION

1.3.1 General

Perform Commissioning in accordance with the requirements of the standard under which the Commissioning Firm's qualifications are approved, i.e., ACG Commissioning Guideline, NEBB Commissioning Standard, or SMACNA 1429 unless otherwise stated herein. Consider mandatory all recommendations and suggested practices contained in the Commissioning Standard. Use the Commissioning Standard for all aspects of Commissioning, including qualifications for the Commissioning Firm and Specialist and calibration of Commissioning instruments. Where the instrument manufacturer calibration recommendations are more stringent than those listed in the Commissioning Standard, the manufacturer's recommendations shall be adhered to. All quality assurance provisions of the Commissioning Standard such as performance guarantees shall be part of this contract. For systems or system components not covered in the Commissioning Standard, Commissioning procedures shall be developed by the Commissioning Specialist. Where new procedures, requirements, etc., applicable to the Contract requirements have been published or adopted by the body responsible for the Commissioning Standard used (ACG, NEBB, or TABB), the requirements and recommendations contained in these procedures and requirements shall be considered mandatory.

1.3.2 Energy

Formal LEED BD+C certification is not required; however, the Contractor is required to provide documentation that meets the LEED BD+C Energy & Atmosphere (EA) Prerequisite 1, Fundamental Commissioning. For New Construction and Major Revisions provide, also, documentation that meets EA Credit 3; Enhanced Commissioning. Provide documentation for as many LEED credits as possible to support LEED Silver certification of the project.

1.4 SUBMITTALS

Government approval is required for submittals with a "G" designation; submittals not having a "G" designation are for [Contractor Quality Control approval.][information only. When used, a designation following the "G" designation identifies the office that will review the submittal for the Government.] Submittals with an "S" are for inclusion in the Sustainability Notebook, in conformance to Section 01 33 29 SUSTAINABILITY REPORTING. Submit the following in accordance with Section 01 33 00 SUBMITTAL PROCEDURES:

SD-02 Shop Drawings

Commissioning Plan; G

SD-03 Product Data

Pre-Functional Performance Test Checklists; G
Functional Performance Tests; G

SD-06 Test Reports

Commissioning Report

SD-07 Certificates

Commissioning Firm
Commissioning Specialist

1.5 QUALITY ASSURANCE

1.5.1 Commissioning Firm

Submit certification of the proposed Commissioning Firm's qualifications to perform the duties specified herein and in other related Sections, no later than 21 days after the Notice to Proceed. Include in the documentation the date that the Certification was initially granted and the date when the current Certification expires. The firm is either a member of ACG or certified by the NEBB or the TABB and certified in all categories and functions where measurements or performance are specified on the plans and specifications. Any lapses in Certification of the proposed Commissioning Firm or disciplinary action taken by ACG, NEBB, or TABB against the proposed Commissioning Firm shall be described in detail. The certification shall be maintained for the entire duration of duties specified herein. If, for any reason, the firm loses subject certification during this period, immediately notify the Contracting Officer and submit another Commissioning Firm for approval. Any firm that has been the subject of disciplinary action by the ACG, the NEBB, or the TABB within the five years preceding Contract Award is not eligible to perform any duties related to the HVAC systems, including Commissioning. All work specified in this Section and in other related Sections to be performed by the Commissioning Firm shall be considered invalid if the Commissioning Firm loses its certification prior to Contract completion and must be performed by an approved successor. These Commissioning services are to assist the prime Contractor in performing the quality oversight for which it is responsible. The Commissioning Firm shall be a subcontractor of the prime Contractor and shall be financially and corporately independent of all other subContractors. The Commissioning Firm shall report to and be paid by the prime Contractor.

1.5.2 Commissioning Specialist

1.5.2.1 General

Submit certification of the proposed Commissioning Specialist's qualifications to perform the duties specified herein and in other related Sections, no later than 21 days after the Notice to Proceed. The documentation shall include the date that the Certification was initially granted and the date when the current Certification expires. The Commissioning Specialist shall be an ACG Certified Commissioning Agent, a NEBB Qualified Commissioning Administrator, or a TABB Certified Commissioning Supervisor and shall be an employee of the approved Commissioning Firm. Any lapses in Certification of the proposed Commissioning Specialist or disciplinary action taken by ACG, NEBB, or TABB against the proposed Commissioning Specialist shall be described in

detail. The certification shall be maintained for the entire duration of duties specified herein. If, for any reason, the Commissioning Specialist loses subject certification during this period, immediately notify the Contracting Officer and submit another Commissioning Specialist for approval. Any individual that has been the subject of disciplinary action by the ACG, the NEBB, or the TABB within the five years preceding Contract Award is not eligible to perform any duties related to the HVAC systems, including Commissioning. All work specified in this Section and in other related Sections performed by the Commissioning Specialist shall be considered invalid if the Commissioning Specialist loses certification prior to Contract completion and must be performed by the approved successor.

1.5.2.2 Responsibilities

Perform all Commissioning work specified herein and in related sections under the direct guidance of the Commissioning Specialist. The Commissioning Specialist shall prepare, no later than 28 days after the approval of the Commissioning Specialist, the Commissioning Plan which will be a comprehensive schedule and will include all submittal requirements for procedures, notifications, reports and the Commissioning Report. After approval of the Commissioning Plan, revise the Contract NAS schedule to reflect the schedule requirements in the Commissioning Plan.

1.6 SEQUENCING AND SCHEDULING

Begin the work described in this Section only after all work required in related Sections has been successfully completed, and all test and inspection reports and operation and maintenance manuals required in these Sections have been submitted and approved. Pre-Functional Performance Test Checklists shall be performed at appropriate times during the construction phase of the Contract.

PART 2 PRODUCTS

Not Used

PART 3 EXECUTION

3.1 COMMISSIONING TEAM AND TEST FORMS AND CHECKLISTS

Designate Contractor team members to participate in the Pre- Functional Performance Test Checklists and the Functional Performance Tests specified herein. In addition, the Government team members will include a representative of the Contracting Officer, the Design Agent's Representative, and the Using Agency's Representative. The team members shall be as follows:

Designation	Function
A	Contractor's Commissioning Specialist
M	Contractor's Mechanical Representative
E	Contractor's Electrical Representative
T	Contractor's Testing, Adjusting, and Balancing (TAB) Specialist

Designation	Function
C	Contractor's Controls Representative
D	Design Agency Representative
O	Contracting Officer's Representative
U	Using Agency's Representative

Appendices A and B shall be completed by the commissioning team. Acceptance by each commissioning team member of each Pre- Functional Performance Test Checklist item shall be indicated by initials and date unless an "X" is shown indicating that participation by that individual is not required. Acceptance by each commissioning team member of each functional performance test item shall be indicated by signature and date.

3.2 TESTS

Perform the pre-functional performance test checklists and functional performance tests in a manner that essentially duplicates the checking, testing, and inspection methods established in the related Sections. Where checking, testing, and inspection methods are not specified in other Sections, establish methods which will provide the information required. Testing and verification required by this section shall be performed during the Commissioning phase. Requirements in related Sections are independent from the requirements of this Section and shall not be used to satisfy any of the requirements specified in this Section. Provide all materials, services, and labor required to perform the pre- functional performance tests checks and functional performance tests. A functional performance test shall be aborted if any system deficiency prevents the successful completion of the test or if any participating non-Government commissioning team member of which participation is specified is not present for the test.

3.2.1 Pre-Functional Performance Test Checklists

Perform Pre-Functional Performance Test Checklists, for the items indicated in Appendix A, at least 28 days prior to the start of Pre-Functional Performance Test Checks.. Correct and re-inspect deficiencies discovered during these checks in accordance with the applicable contract requirements. Submit the schedule for the test checks at least 14 days prior to the start of Pre-Functional Performance Test Checks.

3.2.2 Functional Performance Tests

Submit test procedures at least 28 days prior to the start of Functional Performance Tests. Submit the schedule for the tests at least 14 days prior to the start of Functional Performance Tests. Perform Functional Performance Tests for the items indicated in Appendix B. Begin Functional Performance Tests only after all Pre-Functional Performance Test Checklists have been successfully completed. Tests shall prove all modes of the sequences of operation, and shall verify all other relevant contract requirements. Begin Tests with equipment or components and progress through subsystems to complete systems. Upon failure of any Functional Performance Test item, correct all deficiencies in accordance with the applicable contract requirements. The item shall then be retested until it has been completed with no errors.

3.3 COMMISSIONING REPORT

Submit the Commissioning Report, no later than 14 days after completion of Functional Performance Tests, consisting of completed Pre- Functional Performance Test Checklists and completed Functional Performance Tests organized by system and by subsystem and submitted as one package. The Commissioning Report shall also include all HVAC systems test reports, inspection reports (Preparatory, Initial and Follow-up inspections), start-up reports, TAB report, TAB verification report, Controls start-up test reports and Controls Performance Verification Test (PVT) report. The results of failed tests shall be included along with a description of the corrective action taken.

APPENDIX A

PRE-FUNCTIONAL PERFORMANCE TEST CHECKLISTS

Pre-Functional Performance Test Checklist - Multizone Air Handling Unit

For Air Handling Unit:

Checklist Item	A	M	E	T	C	O
Installation						
a. Inspection and access doors are operable and sealed.	___	___	X	___	X	___
b. Condensate drainage is unobstructed. (Visually verify pan drains completely by pouring a cup of water into drain pan.)	___	___	X	X	X	___
c. Fan belt adjusted.	___	___	X	___	X	___

Electrical	A	M	E	T	C	O
a. Power available to unit disconnect.	___	X	___	X	X	___
b. Power available to unit control panel.	___	X	___	X	X	___
c. Proper motor rotation verified.	___	X	___	___	X	___
d. Verify that power disconnect is located within sight of the unit it controls.	___	X	___	X	X	___

Coils	A	M	E	T	C	O
a. Chilled water piping properly connected.	___	___	X	X	X	___
a. Refrigerant piping properly connected.	___	___	X	X	X	___
b. Hot water piping properly connected.	___	___	X	X	X	___
b. Steam and condensate piping properly connected.	___	___	X	X	X	___

Controls	A	M	E	T	C	O
a. Control valves/actuators properly installed.	___	X	X	X	___	___
b. Control valves/actuators operable.	___	X	X	X	___	___
c. O/A dampers/actuators properly installed.	___	X	X	X	___	___
d. O/A dampers/actuators operable.	___	X	X	X	___	___

Pre-Functional Performance Test Checklist - Multizone Air Handling Unit (cont)

	A	M	E	T	C	O
e. Zone dampers/actuators properly						

installed & dampers leak checked.	___	X	X	X	___	___
f. Zone dampers/actuators operable.	___	X	X	X	___	___
Testing, Adjusting, and Balancing (TAB)	A	M	E	T	C	O
a. Construction filters removed and replaced.	___	___	X	___	X	___
b. TAB report approved.		___	X	X	___	X

Pre-Functional Performance Test Checklist - Variable Volume Air Handling Unit

For Air Handling Unit:

Checklist Item	A	M	E	T	C	O
Installation						
a. Inspection and access doors are operable and sealed.	___	___	X	___	X	___
b. Condensate drainage is unobstructed. (Visually verify drainage by pouring a cup of water into drain pan.)	___	___	X	X	X	___
c. Fan belt adjusted.	___	___	X	___	X	___

Electrical	A	M	E	T	C	O
a. Power available to unit disconnect.	___	X	___	X	X	___
b. Power available to unit control panel.	___	X	___	X	X	___
c. Proper motor rotation verified.	___	X	___	___	X	___
d. Verify that power disconnect is located within sight of the unit it controls.	___	X	___	X	X	___

Coils	A	M	E	T	C	O
a. Chilled water piping properly connected.	___	___	X	X	X	___
a. Refrigerant piping properly connected.	___	___	X	X	X	___
b. Hot water piping properly connected.	___	___	X	X	X	___
b. Steam and condensate piping properly connected.	___	___	X	X	X	___

Pre-Functional Performance Test Checklist - Variable Volume Air Handling Unit

Controls	A	M	E	T	C	O
a. Control valves/actuators properly installed.	___	X	X	X	___	___
b. Control valves/actuators operable.	___	X	X	X	___	___
c. Dampers/actuators properly installed.	___	X	X	X	___	___
d. Dampers/actuators operable.	___	X	X	X	___	___
e. Verify proper location, installation and calibration of duct static pressure sensor.	___	X	X	X	___	___
f. Fan air volume controller operable.	___	X	X	X	___	___
g. Air handler controls system operational.	___	X	X	X	___	___

Testing, Adjusting, and Balancing (TAB)	A	M	E	T	C	O
a. Construction filters removed and replaced.	___	___	X	___	___	___
b. TAB report approved.	___	X	X	___	X	___

Pre-Functional Performance Test Checklist - VAV Terminal

For VAV Terminal:

Checklist Item	A	M	E	T	C	O
Installation						
a. Reheat coil connected to hot water pipe.	___	___	X	___	X	___
b. Electric reheat coil connected to local disconnect.	___	X	___	___	X	___

Controls	A	M	E	T	C	O
a. Cooling only VAV terminal controls set.	___	X	X	X	___	___
b. Cooling only VAV controls verified.	___	X	X	X	___	___
c. Reheat VAV terminal controls set.	___	X	X	X	___	___
d. Reheat terminal/coil controls verified.	___	X	X	X	___	___

Testing, Adjusting, and Balancing (TAB)	A	M	E	T	C	O
a. TAB report approved.	___	___	X	___	X	___

Pre-Functional Performance Test Checklist - DX Air Cooled Condensing Unit

For Condensing Unit:

Checklist Item	A	M	E	T	C	O
Installation						
a. Check condenser fans for proper rotation.	___	___	X	___	X	___

Electrical	A	M	E	T	C	O
a. Power available to unit disconnect.	___	X	___	X	X	___
b. Power available to unit control panel.	___	X	___	X	___	___
c. Verify that power disconnect is located within sight of the unit it controls	___	X	___	X	___	___

Controls	A	M	E	T	C	O
a. Unit safety/protection devices tested.	___	___	X	X	___	___
b. Control system and interlocks installed.	___	___	X	X	___	___
c. Control system and interlocks operational.	___	___	X	X	___	___

Pre-Functional Performance Test Checklist - Pumps

For Pump:

Checklist Item	A	M	E	T	C	O
Installation						
a. Piping system installed.	___	___	X	X	X	___
Electrical	A	M	E	T	C	O
a. Power available to pump disconnect.	___	X	___	X	X	___
b. Pump rotation verified.	___	X	___	X	X	___
c. Control system interlocks functional.	___	X	___	X	___	___
Testing, Adjusting, and Balancing (TAB)	A	M	E	T	C	O
a. Pressure/temperature gauges installed.	___	___	X	___	X	___
b. TAB Report approved.	___	___	X	___	X	___

Pre-Functional Performance Test Checklist - Packaged Air Cooled Chiller

For Chiller:

Checklist Item	A	M	E	T	C	O
Installation						
a. Chiller properly piped.	___	___	X	___	___	___
Electrical	A	M	E	T	C	O
a. Power available to unit disconnect.	___	X	___	X	___	___
b. Power available to unit control panel.	___	X	___	X	___	___
c. Separate power is supplied to electric heating tape.	___	X	___	X	___	___
d. Verify that power disconnect is located within sight of the unit it controls.	___	X	___	X	___	___
Controls	A	M	E	T	C	O
a. Factory startup and checkout complete.	___	___	X	X	___	___
b. Chiller safety/protection devices tested.	___	___	X	X	___	___
c. Chilled water flow switch installed.	___	___	X	X	___	___
d. Chilled water flow switch tested.	___	___	X	X	___	___
e. Chilled water pump interlock installed.	___	___	X	X	X	___
f. Chilled water pump interlock tested.	___	___	___	X		

Pre-Functional Performance Test Checklist - Centrifugal Chiller

For Chiller:

Checklist Item

Installation	A	M	E	T	C	O
a. Chilled water connections properly piped.	___	___	X	___	___	___
b. Condenser water connections properly piped	___	___	X	___	___	___
c. Refrigerant leak detector installed.	___	___	___	___	___	___
d. Oxygen sensor installed and tested.	___	___	___	___	___	___
e. Mechanical room ventilation installed as specified.	___	___	___	___	___	___

Electrical	A	M	E	T	C	O
a. Power available to unit starter.	___	X	___	X	___	___
b. Power available to unit control panel.	___	X	___	X	___	___
c. Verify that power disconnect is located within sight of the unit it controls.	___	X	___	X	___	___

Controls	A	M	E	T	C	O
a. Factory startup and checkout complete.	___	___	X	X	___	___
b. Chiller safety/protection devices tested.	___	___	___	X	___	___
c. Chilled water flow switch installed and tested.	___	___	X	X	___	___
e. Chilled water pump interlock installed and tested.	___	___	___	X	___	___
g. Condenser water flow switch installed and tested.	___	___	___	X	___	___
i. Condenser water pump interlock installed and tested.	___	___	___	X	___	___

Testing, Adjusting, and Balancing (TAB)	A	M	E	T	C	O
a. TAB report approved.	___	___	X	___	X	_____

Pre-Functional Performance Test Checklist - Hot Water Boiler

For Boiler:

Checklist Item

Installation	A	M	E	T	C	O
a. Boiler hot water piping installed.	___	___	X	___	___	___
b. Boiler makeup water piping installed.	___	___	X	___	___	___
c. Boiler fuel oil piping installed.	___	___	X	X	X	___
d. Boiler gas piping installed.	___	___	X	X	X	___

Startup	A	M	E	T	C	O
a. Boiler safety/protection devices, including high temperature burner shut-off, low water cutoff, flame failure, pre- and post-purge, have been tested.	___	___	___	X	___	___
b. Verify that PRV rating conforms to boiler rating.	___	___	___	X	___	___
c. Boiler water treatment system functional.	___	___	X	X	___	___
d. Boiler startup and checkout complete.	___	___	X	X	___	___
e. Combustion efficiency demonstrated.	___	___	X	___	X	___

Electrical	A	M	E	T	C	O
a. Verify that power disconnect is located within sight of the unit served.	___	X	___	X	___	___

Controls	A	M	E	T	C	O
a. Hot water pump interlock installed and tested.	___	___	___	X	___	___
b. Hot water proof-of-flow switch installed and tested	___	___	X	X	___	___
c. Hot water heating controls operational.	___	___	X	X	___	___

Testing, Adjusting, and Balancing (TAB)	A	M	E	T	C	O
a. TAB report approved.	___	___	X	___	X	___

Pre-Functional Performance Test Checklist - Steam/Hot Water Converter

For Converter:

Checklist Item

Installation	A	M	E	T	C	O
a. Converter steam piping installed.	___	___	X	___	X	___
b. Hot water piping installed.	___	___	X	___	___	___
c. Makeup water piping installed.	___	___	X	X	X	___
d. Vacuum breaker installed on shell of shell and tube unit.	___	___	X	X	X	___

Startup	A	M	E	T	C	O
a. All steam traps operational.	___	___	X	X	X	___
b. All condensate return pumps operational.	___	___	___	X	___	___
c. Converter safety/protection devices tested.	___	___	X	X	X	___
d. Converter startup and checkout complete.	___	___	X	X	X	___

Controls	A	M	E	T	C	O
a. Control valves/actuators properly installed.	___	___	X	___	___	___
b. Control valves/actuators operable.	___	___	X	___	___	___

Pre-Functional Performance Test Checklist - Fan Coil Unit

For Fan Coil Unit:

Checklist Item

Installation	A	M	E	T	C	O
a. Access doors/removable panels are operable and sealed.	___	___	X	___	X	___
b. Condensate drainage is unobstructed.	___	___	X	X	X	___
c. Fan belt adjusted.	___	___	X	___	X	___

Electrical	A	M	E	T	C	O
a. Power available to unit disconnect.	___	___	___	X	___	___
b. Power available to unit control panel.	___	___	___	X	___	___
c. Proper motor rotation verified.	___	___	___	___	X	___
d. Verify that power disconnect is located within sight of the unit it controls.	___	___	___	X	___	___

Coils	A	M	E	T	C	O
a. Dual temperature piping properly connected.	___	___	X	___	___	___
b. Chilled water piping properly connected.	___	___	X	X	X	___
c. Hot water piping properly connected.	___	___	X	___	___	___

Controls	A	M	E	T	C	O
a. Control valves/actuators properly installed.	___	___	X	___	___	___
b. Control valves/actuators operable.	___	___	X	X	___	___
c. Verify proper location and installation of thermostat.	___	___	X	___	___	___

Testing, Adjusting, and Balancing (TAB)	A	M	E	T	C	O
a. TAB Report approved.	___	___	X	___	X	___

Pre-Functional Performance Test Checklist - Unit Heater

For Unit Heater:

Checklist Item

Installation	A	M	E	T	C	O
a. Hot water piping properly connected.	___	___	X	___	___	___
b. Steam and condensate piping properly connected.	___	___	X	X	X	___

Electrical	A	M	E	T	C	O
a. Power available to unit disconnect.	___	___	___	X	___	___
b. Proper motor rotation verified.	___	___	___	X	X	___
c. Verify that power disconnect is located within sight of the unit it controls.	___	___	___	X	___	___
d. Power available to electric heating coil.	___	___	___	X	___	___

Controls	A	M	E	T	C	O
a. Control valves properly installed.	___	___	X	___	___	___
b. Control valves operable.	___	___	X	X	___	___
c. Verify proper location and installation of thermostat.	___	___	X	___	___	___

Testing, Adjusting, and Balancing (TAB)	A	M	E	T	C	O
a. TAB Report approved.	___	___	X	___	X	___

Pre-Functional Performance Test Checklist - Exhaust Fan

For Exhaust Fan:

Checklist Item

Installation	A	M	E	T	C	O
a. Fan belt adjusted.	___	___	X	___	X	___

Electrical	A	M	E	T	C	O
a. Power available to fan disconnect.	___	___	___	X	___	___
b. Proper motor rotation verified.	___	___	___	___	X	___
c. Verify that power disconnect is located within sight of the unit it controls.	___	___	___	X	___	___

Controls	A	M	E	T	C	O
a. Control interlocks properly installed.	___	___	___	X	___	___
b. Control interlocks operable.	___	___	___	X	___	___
c. Dampers/actuators properly installed.	___	___	X	___	___	___
d. Dampers/actuators operable.	___	___	X	___	___	___
e. Verify proper location and installation of thermostat.	___	___	X	___	___	___

Testing, Adjusting, and Balancing (TAB)	A	M	E	T	C	O
a. TAB Report approved.	___	___	X	___	X	___

Pre-Functional Performance Test Checklist - HVAC System Controls

For HVAC System:

Checklist Item

Installation	A	M	E	T	C	O
a. Layout of control panel matches drawings.	___	___	X	X	___	___
b. Framed instructions mounted in or near control panel.	___	___	X	X	___	___
c. Components properly labeled (on inside and outside of panel).	___	___	X	X	___	___
d. Control components piped and/or wired to each labeled terminal strip.	___	___	X	X	___	___
e. EMCS connection made to each labeled terminal strip as shown.	___	___	X	X	___	___
f. Control wiring and tubing labeled at all terminations, splices, and junctions.	___	___	X	X	___	___

Main Power and Control Air						
a. 120 volt AC power available to panel.	___	___	___	X	___	___
b. 20 psig compressed air available to panel.	___	___	X	X	___	___

Testing, Adjusting, and Balancing (TAB)	A	M	E	T	C	O
a. TAB Report submitted.	___	___	X	___	X	___

Pre-Functional Performance Test Checklist - Single Zone Air Handling Unit

For Air Handling Unit:

Checklist Item

Installation	A	M	E	T	C	O
a. Inspection and access doors are operable and sealed.	___	___	X	___	X	___
b. Condensate drainage is unobstructed.	___	___	X	X	X	___
c. Fan belt adjusted.	___	___	X	___	X	___

Electrical	A	M	E	T	C	O
a. Power available to unit disconnect.	___	___	___	X	X	___
b. Power available to unit control panel.	___	___	___	X	___	___
c. Proper motor rotation verified.	___	___	___	___	X	___
d. Verify that power disconnect is located within sight of the unit it controls.	___	___	___	X	___	___
e. Power available to electric heating coil.	___	___	___	X	___	___

Coils	A	M	E	T	C	O
a. Chilled water piping properly connected.	___	___	X	___	___	___
b. Refrigerant piping properly connected.	___	___	X	X	X	___
c. Hot water piping properly connected.	___	___	X	___	___	___
d. Steam and condensate piping properly connected.	___	___	X	X	X	___

Controls	A	M	E	T	C	O
a. Control valves/actuators properly installed.	___	___	X	___	___	___
b. Control valves/actuators operable.	___	___	X	___	___	___
c. Dampers/actuators properly installed.	___	___	X	___	___	___
d. Dampers/actuators operable.	___	___	X	___	___	___
e. Verify proper location and installation of thermostat.	___	___	X	___	___	___

Testing, Adjusting, and Balancing (TAB)	A	M	E	T	C	O

a. TAB Report approved. ___ ___ X ___ X ___

Pre-Functional Performance Test Checklist - Energy Recovery System

For Energy Recovery System:

Checklist Item

Installation	A	M	E	T	C	O
a. Recovery system piping installed.	___	___	X	___	X	___

Startup	A	M	E	T	C	O
a. Startup and checkout complete.	___	___	X	X	X	___

Controls	A	M	E	T	C	O
a. Control valves/actuators properly installed.	___	___	X	___	___	___
b. Control valves/actuators operable.	___	___	X	___	___	___

- End of Appendix A -

APPENDIX B

FUNCTIONAL PERFORMANCE TESTS CHECKLISTS

Functional Performance Test - Pump

NOTE: Prior to performing this test, for closed loop systems ensure that the system is pressurized and the make-up water system is operational, or for open loop systems ensure that the sumps are filled to the proper level.

1. Activate pump start using control system commands.

a. Verify correct operation in:

HAND_____ OFF_____ AUTO_____

b. Verify pressure drop across strainer:

Strainer inlet pressure _____ psig

Strainer outlet pressure _____ psig

c. Verify pump inlet/outlet pressure reading, compare to Testing, Adjusting, and Balancing (TAB) Report and pump design conditions.

	DESIGN	TAB	ACTUAL
Pump inlet pressure psig	_____	_____	_____
Pump outlet pressure psig	_____	_____	_____

d. Operate pump at shutoff and at 100 percent of designed flow when all components are in full flow. Plot test readings on pump curve and compare results against readings taken from flow measuring devices.

	SHUTOFF	100 percent
Pump inlet pressure psig	_____	_____
Pump outlet pressure psig	_____	_____
Pump flow rate gpm	_____	_____

	SETPOINT
Differential Pressure Transmitter	_____

Functional Performance Test (cont) - Pump

e. For variable speed pumps, operate pump at shutoff (shutoff to be done in manual on variable speed drive at the minimum rpm that the system is being controlled at) and at minimum flow or when all components are in full by-pass. Plot test readings on pump curve and compare results against readings taken from flow measuring devices.

	SHUTOFF	100 percent
Pump inlet pressure psig	_____	_____
Pump outlet pressure psig	_____	_____
Pump flow rate gpm	_____	_____

	SETPOINT
Differential Pressure Transmitter	_____

2. Measure motor amperage each phase and voltage phase to phase and phase to ground for both the full flow and the minimum flow conditions. Compare amperage to nameplate FLA.

a. Full flow:

Nameplate FLA _____

Amperage	Phase 1 _____	Phase 2_____	Phase 3_____
Voltage	Ph1-Ph2 _____	Ph1-Ph3_____	Ph2-Ph3_____
Voltage	Ph1-gnd _____	Ph2-gnd_____	Ph3-gnd_____

b. Minimum flow:

Amperage	Phase 1 _____	Phase 2_____	Phase 3_____
Voltage	Ph1-Ph2 _____	Ph1-Ph3_____	Ph2-Ph3_____
Voltage	Ph1-gnd _____	Ph2-gnd_____	Ph3-gnd_____

3. Note unusual vibration, noise, etc.

_____

_____

Functional Performance Test (cont) - Pump

4. Certification: We the undersigned have witnessed the above functional performance tests and certify that the item tested has met the performance requirements in this section of the specifications.

	Signature and Date
Contractor's Commissioning Specialist	_____
Contractor's Mechanical Representative	_____
Contractor's Electrical Representative	_____
Contractor's TAB Representative	_____
Contractor's Controls Representative	_____
Contracting Officer's Representative	_____
Design Agency Representative	_____
Using Agency's Representative	_____

Functional Performance Test - Centrifugal Chiller

Note: If water-cooled chiller perform in conjunction with Cooling Tower test.

1. Demonstrate operation of chilled water system in accordance with specifications including the following: Start building air handler to provide load for chiller. Activate controls system chiller start sequence as follows:

a. Time of day startup program initiates chiller start: _____

b. Record outdoor air temperature: _____

c. Start condenser water pump and establish condenser water flow. Verify chiller condenser water proof-of-flow switch operation._____

d. Start chilled water pump and establish chilled water flow. Verify chiller chilled water proof-of-flow switch operation. _____

e. Verify control system energizes chiller start sequence._____

f. Verify chiller senses chilled water temperature above set point and control system activates chiller start. _____

g. Verify functioning of "soft start" sequence. _____

h. Record data in 2, 3 and 4 below on fully load chiller.

i. Shut off air handling equipment to remove load on chilled water system. Verify chiller shutdown sequence is initiated and accomplished after load is removed. _____

j. Restart air-handling equipment one minute after chiller shut down. Verify condenser water pump, cooling tower, and chiller restart sequence. _____

2. Verify chiller inlet/outlet pressure and flow reading, compare to Testing, Adjusting, and Balancing (TAB) Report, chiller design conditions, and chiller manufacturer's performance data.

		DESIGN	TAB REPORT	ACTUAL
Chiller inlet pressure	psig	_____	_____	
Chiller outlet pressure	psig	_____	_____	
Chiller flow	GPM	_____	_____	_____

3. Measure chiller amperage each phase and voltage phase to phase and phase to ground for both the fully loaded condition.

				Motor F/L AMPS
Amperage	Phase 1 _____	Phase 2_____	Phase 3_____	_____
Voltage	Ph1-Ph2 _____	Ph1-Ph3_____	Ph2-Ph3_____	

Voltage Ph1-gnd _____ Ph2-gnd_____ Ph3-gnd_____

Functional Performance Test (cont) - Centrifugal Chiller

4. a. Record the following information: Design

Outdoor air temperature _____	deg F	
Ambient dry bulb temperature _____	deg F	_____
Entering chilled water temperature _____	deg F	_____
Leaving chilled water temperature _____	deg F	_____

b. Calculate chiller load at ambient conditions and compare to chiller rated capacity from manufacturer's literature. Calculated _____ Ton Rated _____ Ton.

5. Unusual vibration, noise, etc.

_____

_____

6. Certification: We the undersigned have witnessed the above functional performance tests and certify that the item tested has met the performance requirements in this section of the specifications.

	Signature and Date
Contractor's Commissioning Specialist	_____
Contractor's Mechanical Representative	_____
Contractor's Electrical Representative	_____
Contractor's TAB Representative	_____
Contractor's Controls Representative	_____
Contracting Officer's Representative	_____
Design Agency Representative	_____
Using Agency's Representative	_____

Functional Performance Test Checklist - VAV Terminals

The Contracting officer will select VAV terminals to be spot-checked during the functional performance test. The number of terminals selected shall not exceed 10 percent.

1. Functional Performance Test: Contractor shall demonstrate operation of selected VAV boxes in accordance with specifications including the following:

a. Cooling only VAV boxes:

(1) Verify VAV box response to room temperature set point adjustment. Turn thermostat to 5 degrees F below ambient and measure maximum airflow. Turn thermostat to 5 degrees F above ambient and measure minimum airflow.

	Setting	Measured	Design
Maximum flow	_____	_____	_____ cfm
Minimum flow	_____	_____	_____ cfm

b. Cooling with reheat VAV boxes:

(1) Verify VAV box response to room temperature set point adjustment. Turn thermostat to 5 degrees F above ambient and measure maximum airflow. Turn thermostat to 5 degrees F below ambient and measure minimum airflow.

	Setting	Measured	Design
Maximum flow	_____	_____	_____ cfm
Minimum flow	_____	_____	_____ cfm

(2) Verify reheat coil operation range (full closed to full open) by turning room thermostat 5 degrees F above ambient _____.

With heating water system and boiler in operation providing design supply hot water temperature record the following:

Design HW supply temperature_____ deg F
Actual HW supply temperature_____ deg F
AHU supply air temperature_____ deg F
VAV supply air temperature_____ deg F
Calculate coil capacity and compare to design:
Design _____ BTU/hr Actual _____BTU/hr

Functional Performance Test Checklist (cont)- VAV Terminals

c. Parallel Fan powered VAV boxes:

(1) Verify VAV box responses to call for heating via set point adjustment. Change from cooling set point to heating set point. Verify cooling damper closes to minimum position, blower fan energizes according to sequence of operation, and upon further drop in space temperature, heating coil activation. _____

With heating water system in operation providing design supply hot water temperature record the following:

Design HW supply temperature_____ deg F
Actual HW supply temperature_____ deg F
AHU supply air temperature_____ deg F
VAV supply air temperature_____ deg F
Calculate coil capacity and compare to design:
Design _____ BTU/hr Actual _____BTU/hr

(2) Check primary air damper maximum/minimum flow settings and compare to actual measured flows.

	Setting	Measured	Design
Maximum flow	_____	_____	_____ cfm
Minimum flow	_____	_____	_____ cfm

(3) Check blower fan flow. _____ cfm

(4) Verify free operation of fan backdraft damper (insure no primary air is being discharged into plenum space).

---

d. Series Fan Powered VAV boxes

(1) Ensure VAV fan starts prior to AHU fan

(2) Verify VAV box response to sensor call for heating via set point adjustment. Change from cooling set point to heating set point. Verify cooling damper closes to minimum position and upon further drop in space temperature, heating coil activation. With heating water system and boiler in operation providing design supply hot water temperature record the following:

Design HW supply temperature_____ deg F
Actual HW supply temperature_____ deg F
AHU supply air temperature_____ deg F
VAV supply air temperature_____ deg F
Calculate coil capacity and compare to design:
Design _____ BTU/hr Actual _____BTU/hr

(3) Check primary air damper maximum/minimum flow settings and compare to actual measured flows.

	Setting	Measured	Design
Maximum flow	_____	_____	_____ cfm

Minimum flow _____ _____ _____ cfm

Functional Performance Test Checklist (cont)- VAV Terminals

(4) Verify that minimal primary air is discharging into the plenum space when in full cooling mode.

(5) Verify that no plenum air is being induced from the plenum space into the supply air during full cooling by measuring supply air temperature and comparing to primary air temperature

Primary air temp _____ deg F
Supply air temp _____ deg F

2. Certification: We the undersigned have witnessed the above functional performance tests and certify that the item tested has met the performance requirements in this section of the specifications.

	Signature and Date
Contractor's Commissioning Specialist	_____
Contractor's Mechanical Representative	_____
Contractor's Electrical Representative	_____
Contractor's TAB Representative	_____
Contractor's Controls Representative	_____
Contracting Officer's Representative	_____
Design Agency Representative	_____
Using Agency's Representative	_____

Functional Performance Test Checklist - Variable Volume Air Handling Unit

For Air Handling Unit:

1. Functional Performance Test: Contractor shall verify operation of air handling unit in accordance with specification including the following:

a. Ensure that a slight negative pressure exists on inboard side of the outside air dampers throughout the operation of the dampers. Modulate OA, RA, and EA dampers from fully open to fully closed positions_____.

b. The following shall be verified supply and return fans operating mode is initiated:

(1) All dampers in normal position prior to fan start_____.

(2) All valves in normal position prior to fan start_____.

(3) System safeties allow start if safety conditions are met.____

(4) VAV fan controller shall "soft-start" fan. _____

(5) Modulate all VAV boxes to minimum air flow and verify that the static pressure does not exceed the high static pressure shutdown setpoint_____.

(6) Return all VAV boxes to auto _____.

c. Occupied mode of operation - economizer de-energized.

(1) Outside air damper at minimum position. _____

(2) Return air damper open. _____

(3) Relief air damper at minimum position . _____

(4) Chilled water control valve modulating to maintain leaving air temperature set point. Setpoint _____deg F Actual _____deg F

(5) Fan VAV controller receiving signal from duct static pressure sensor and modulating fan to maintain supply duct static pressure set point.
Setpoint _____inches-wg Actual _____inches-wg

d. Occupied mode of operation - economizer energized.

(1) Outside air damper modulated to maintain mixed air temperature set point. Setpoint _____deg F, Actual _____deg F, Outside air damper position _____ percent.

(2) Relief air damper modulates with outside air damper according to sequence of operation. Relief air damper position_____ percent.

(3) Chilled water control valve modulating to maintain leaving air temperature set point. Setpoint _____deg F Actual _____deg F

(4) Hot water control valve modulating to maintain leaving air

temperature set point. Setpoint _____deg F Actual _____deg F

Functional Performance Test Checklist (cont) - Variable Volume Air Handling Unit

(5) Fan VAV controller receives signal from duct static pressure sensor and modulates fan to maintain supply duct static pressure set point. Setpoint inches-wg_____ Actual inches-wg_____

e. Unoccupied mode of operation

(1) Observe fan starts when space temperature calls for heating and/or cooling. _____ Note: This does not apply to series boxes.
(2) All dampers in normal position. _____
(3) Verify space temperature is maintained as specified in sequence of operation. _____

f. The following shall be verified when the supply and return fans off mode is initiated:

(1) All dampers in normal position. _____

(2) All valves in normal position. _____

(3) Fan de-energizes. _____

g. Verify the chilled water coil control valve operation by setting all VAV's to maximum and minimum cooling.

Max Cooling

Supply air temp. _____ deg F Verify cooling valve operation_____.

Min cooling

Supply air temp. _____ deg F Verify cooling valve operation_____.

h. Verify safety shut down initiated by low temperature protection thermostat. _____

i. Verify occupancy schedule is programmed into time clock/UMCS_____.

2. Certification: We the undersigned have witnessed the above functional performance tests and certify that the item tested has met the performance requirements in this section of the specifications.

Signature and Date

Contractor's Commissioning Specialist _____

Contractor's Mechanical Representative _____

Contractor's Electrical Representative _____

Contractor's TAB Representative _____

Contractor's Controls Representative _____

Design Agency Representative _____

Contracting Officer's Representative _____

Using Agency's Representative _____

Functional Performance Test Checklist - Single Zone Air Handling Unit

For Air Handling Unit:

1. Functional Performance Test: Contractor shall verify operation of air handling unit in accordance with specification including the following:

a. Ensure that a slight negative pressure exists on inboard side of the outside air dampers throughout the operation of the dampers. Modulate OA, RA, and EA dampers from fully open to fully closed positions.

a. The following shall be verified when the supply and return fans operating mode is initiated:

(1) All dampers in normal position prior to fan start_____.

(2) All valves in normal position prior to fan start_____.

(3) System safeties allow start if safety conditions are met. ___

b. Occupied mode of operation - economizer de-energized.

(1) Outside air damper at minimum position._____

(2) Return air damper open._____

(3) Relief air damper at minimum position._____

(4) Chilled water control valve modulating to maintain space cooling temperature set point. Setpoint _____deg F Actual _____deg F

(5) Hot water control valve modulating to maintain space heating temperature set point input from outside air temperature controller. _____

c. Occupied mode of operation - economizer energized.

(1) Outside air damper modulated to maintain mixed air temperature set point. Setpoint _____deg F Actual _____deg F O/A damper position _____ percent Return Air Temperature_____deg F Outside Air Temperature _____ deg F

(2) Relief air damper modulates with outside air damper according to sequence of operation. Relief air damper position _____ percent

(3) Chilled water control valve modulating to maintain space cooling temperature set point. Setpoint _____deg F Actual _____deg F Return sensor overrides to normal operation.

d. Unoccupied mode of operation.
(1) Observe fan starts when space temperature calls for heating/cooling ____.
(2) All dampers in normal position. _____
(3) Verify low limit space temperature is maintained as specified in sequence of operation. _____

Functional Performance Test Checklist (cont) - Single Zone Air Handling Unit

e. The following shall be verified when the supply and return fans off mode is initiated:

(1) All dampers in normal position._____

(2) All valves in normal position._____

(3) Fan de-energizes. _____

f. Verify cooling coil and heating coil operation by varying thermostat set point from cooling set point to heating set point and returning to cooling set point_____.

g. Verify safety shut down initiated by low temperature protection thermostat_____.

h. Verify occupancy schedule is programmed into time clock/UMCS_____.

2. Certification: We the undersigned have witnessed the above functional performance tests and certify that the item tested has met the performance requirements in this section of the specifications.

	Signature and Date
Contractor's Commissioning Specialist	_____
Contractor's Mechanical Representative	_____
Contractor's Electrical Representative	_____
Contractor's TAB Representative	_____
Contractor's Controls Representative	_____
Design Agency Representative	_____
Contracting Officer's Representative	_____
Using Agency's Representative	_____

Functional Performance Test Checklist - Multi-zone Air Handling Unit

For Air Handling Unit:

1. Functional Performance Test: Contractor shall verify operation of air handling unit in accordance with specification including the following:

a. Ensure that a slight negative pressure exists on inboard side of the outside air dampers throughout the operation of the dampers. Modulate OA, RA, and EA dampers from fully open to fully closed positions.

b. The following shall be verified when the supply and return fans operating mode is initiated:

(1) All dampers in normal position. _____

(2) All valves in normal position. _____

(3) System safeties allow start if safety conditions are met. ___

b. Occupied mode of operation - economizer de-energized.

(1) Outside air damper at minimum position. _____

(2) Return air damper open. _____

(3) Relief air damper at minimum position . _____

(4) Chilled water control valve modulating to maintain cold deck supply air temperature set point. Setpoint _____deg F Actual _____deg F

(5) Hot water control valve modulating to maintain hot deck supply air temperature set point input from outside air temperature controller. Setpoint _____deg F Actual _____deg F O/A _____deg F

c. Occupied mode of operation - economizer energized. Note outside air and return air temperature sensors may need to be simulated.

(1) Outside air damper modulates to maintain mixed air temperature set point. Setpoint _____deg F Actual _____deg F Return Air Temperature _____deg F Outside Air Temperature _____deg F

(2) Relief air damper modulates with outside air damper according to sequence of operation._____

(3)Chilled water control valve modulating to maintain cold deck supply air temperature set point. Setpoint _____deg F Actual _____deg F

(4)Hot water control valve modulating to maintain hot deck supply air temperature set point input from outside air temperature controller. Setpoint _____deg F Actual _____deg F O/A _____ deg F
Return temperature sensors to normal operation.

Functional Performance Test Checklist (cont) - Multi-zone Air Handling Unit

d. Unoccupied mode of operation note time clock and space temperature sensor may require simulation.
(4) Observe fan starts when space temperature calls for heating/cooling.
(5) All dampers in normal position. _____
(6) Verify low limit space temperature is maintained as specified in sequence of operation. _____

e. The following shall be verified when the supply and return fans off mode is initiated:

(1) All dampers in normal position. _____

(2) All valves in normal position. _____

(3) Fan de-energizes. _____
Note: return time clock and space temperature sensors to normal operation.

f. Verify zone damper operation by varying zone thermostat set points from cooling set point to heating set point and returning to cooling set point. _____

g. Verify safety shut down initiated by low temperature protection thermostat. _____

h. Index room thermostats to full cooling then to full heating. Measure and record cold deck, hot deck, and supply air temperatures and determine damper leakage for a minimum of 2 zones.

Cold deck temperature _____ degrees F
Hot deck temperature _____ degrees F

Zone _____
Zone ____ Supply Air Temperature at Max Cooling _____deg F
Zone ____ Supply Air Temperature at Max Heating _____deg F
Zone ____Hot Deck Damper leakage at Max cooling _____CFM
Zone ____Cold Deck Damper leakage at Max heating _____CFM

Zone _____
Zone ____ Supply Air Temperature at Max Cooling _____deg F
Zone ____ Supply Air Temperature at Max Heating _____deg F
Zone ____Hot Deck Damper leakage at Max cooling _____CFM
Zone ____Cold Deck Damper leakage at Max heating _____CFM

i. Verify occupancy schedule is programmed into time clock/UMCS_____.

Functional Performance Test Checklist (cont) - Multi-zone Air Handling Unit

2. Certification: We the undersigned have witnessed the above functional performance tests and certify that the item tested has met the performance requirements in this section of the specifications.

	Signature and Date
Contractor's Commissioning Specialist	_____
Contractor's Mechanical Representative	_____
Contractor's Electrical Representative	_____
Contractor's TAB Representative	_____
Contractor's Controls Representative	_____
Design Agency Representative	_____
Contracting Officer's Representative	_____
Using Agency's Representative	_____

Functional Performance Test Checklist - Packaged Air Cooled Chiller

For Chiller:

1. Functional Performance Test: Contractor shall demonstrate operation of chilled water system in accordance with specifications including the following: Start building air handler to provide load for chiller. Activate controls system chiller start sequence as follows.

a. Start chilled water pump and establish chilled water flow. Verify chiller-chilled water proof-of-flow switch operation. _____ Record outdoor air temperature. _____

b. Verify control system energizes chiller start sequence. _____

c. Verify chiller senses chilled water temperature above set point and control system activates chiller start. Setpoint_____deg F Actual_____ deg F

d. Verify functioning of "soft start" sequence. _____

e. Verify and record chiller data in accordance with 2, 3 and 4 below on fully loaded chiller.

f. Shut off air handling equipment to remove load on chilled water system. Verify chiller shutdown sequence is initiated and accomplished after load is removed. _____

g. Restart air handling equipment one minute after chiller shut down. Verify chiller restart sequence. _____

2. Verify chiller inlet/outlet pressure reading, compare to Testing, Adjusting, and Balancing (TAB) Report, chiller design conditions, and chiller manufacturer's performance data.

		DESIGN	TAB TEST	ACTUAL
Chiller inlet pressure	(psig)	_____	_____	_____
Chiller outlet pressure	(psig)	_____	_____	_____
Chiller flow	GPM	_____	_____	_____

3. Verify chiller amperage each phase and voltage phase-to-phase and phase-to-ground.

				Motor F/L AMPS
Amperage	Phase 1 _____	Phase 2_____	Phase 3_____	_____
Voltage	Ph1-Ph2 _____	Ph1-Ph3_____	Ph2-Ph3_____	
Voltage	Ph1-gnd _____	Ph2-gnd_____	Ph3-gnd_____	

Functional Performance Test Checklist (cont) - Packaged Air Cooled Chiller

4.

a. Record the following information:

		Design
Outdoor air temperature _____	degrees F	
Ambient dry bulb temperature _____	degrees F	_____degrees F
Entering chilled water temperature _____	degrees F	_____degrees F
Leaving chilled water temperature _____	degrees F	_____degrees F

b. Calculate chiller load at ambient conditions and compare to chiller rated capacity from manufacturer's literature. Calculated _____ Ton Rated _____ Ton.

5. Unusual vibration, noise, etc.

_____

_____

6. Certification: We the undersigned have witnessed the above functional performance tests and certify that the item tested has met the performance requirements in this section of the specifications.

	Signature and Date
Contractor's Commissioning Specialist	_____
Contractor's Mechanical Representative	_____
Contractor's Electrical Representative	_____
Contractor's TAB Representative	_____
Contractor's Controls Representative	_____
Design Agency Representative	_____
Contracting Officer's Representative	_____
Using Agency's Representative	_____

Functional Performance Test Checklist - Air Cooled Condensing Unit

For Condensing Unit:

1. Functional Performance Test: Contractor shall demonstrate operation of refrigeration system in accordance with specifications including the following: Start building air handler to provide load for condensing unit. Activate controls system start sequence as follows.

a. Start air handling unit. Verify control system energizes condensing unit start sequence. _____

b. Verify and record data in 2 and 3 below.
c. Shut off air handling equipment to verify condensing unit de-energizes. _____

d. Restart air handling equipment one minute after condensing unit shut down. Verify condensing unit restart sequence. _____

2. Verify condensing unit amperage each phase and voltage phase to phase and phase to ground.
Motor Full-Load Amps _____

Amperage	Phase 1 _____	Phase 2_____	Phase 3_____
Voltage	Ph1-Ph2 _____	Ph1-Ph3_____	Ph2-Ph3_____
Voltage	Ph1-gnd _____	Ph2-gnd_____	Ph3-gnd_____

3. Record the following information:
Ambient dry bulb temperature _____ degrees F
Suction pressure _____ psig
Discharge pressure _____ psig

4. Unusual vibration, noise, etc.

_____

_____

5. Certification: We the undersigned have witnessed the above functional performance tests and certify that the item tested has met the performance requirements in this section of the specifications.

Signature and Date

Contractor's Commissioning Specialist _____

Contractor's Mechanical Representative _____

Contractor's Electrical Representative _____

Contractor's TAB Representative _____

Contractor's Controls Representative _____

Design Agency Representative _____

Contracting Officer's Representative _____

Using Agency's Representative _____

Functional Performance Test Checklist - Hot Water Boiler

For Boiler:

1. Functional Performance Test: Contractor shall demonstrate operation of hot water system in accordance with specifications including the following: Start building heating equipment to provide load for boiler. Activate controls system boiler start sequence as follows.

a. Start hot water pump and establish hot water flow. Verify boiler hot water proof-of-flow switch operation. _____
Record outdoor air temperature. _____

b. Verify control system energizes boiler start sequence. _____

c. Verify boiler senses hot water temperature below set point and control system activates boiler start. Setpoint_____deg F

2. Verify boiler inlet/outlet pressure reading, compare to Test and Balance (TAB) Report, boiler design conditions, and boiler manufacturer's performance data.

	DESIGN	SYSTEM TEST	ACTUAL
Boiler inlet water temperature deg F	_____	_____	_____
Boiler outlet water temperature deg F	_____	_____	_____
Boiler outlet pressure psig	_____	_____	_____
Boiler flow rate gpm	_____	_____	_____
Flue-gas temperature at boiler outlet deg F		_____	_____
Percent carbon dioxide in flue-gas		_____	_____
Draft at boiler flue-gas exit inches-wg		_____	_____
Stack emission pollutants concentration	_____	_____	_____
Fuel type	_____	_____	_____
Combustion efficiency	_____	_____	_____

3. Record the following information:

Ambient dry bulb temperature to determine reset schedule_____degrees F
Building Entering hot water temperature _____degrees F
Building Leaving hot water temperature _____ degrees F

4. Verify temperatures in item 3 are in accordance with the reset schedule. _____

5. Verify proper operation of boiler safeties. _____
   a. Low water_____
   b. Water flow____
   c. Flame failure____
   d. Pilot failure____
   e. Pre and Post Purge failure____
   f. Pressure relief___
   g. High temperature____

6. Shut off building heating equipment to remove load on hot water system. Verify boiler shutdown sequence is initiated and accomplished after load is removed. _____

Functional Performance Test Checklist (cont) - Hot Water Boiler

7. Unusual vibration, noise, etc.

_____

_____

8. Certification: We the undersigned have witnessed the above functional performance tests and certify that the item tested has met the performance requirements in this section of the specifications.

	Signature and Date
Contractor's Commissioning Specialist	_____
Contractor's Mechanical Representative	_____
Contractor's Electrical Representative	_____
Contractor's TAB Representative	_____
Contractor's Controls Representative	_____
Design Agency Representative	_____
Contracting Officer's Representative	_____
Using Agency's Representative	_____

Functional Performance Test Checklist - Fan Coil Units

The Contracting Officer will select fan coil units to be spot-checked during the functional performance test. The number of terminals shall not exceed 10 percent. Hot water and chilled water systems must be in operation providing design water temperatures.

1. Functional Performance Test: Contractor shall demonstrate operation of selected fan coils in accordance with specifications including the following:

a. Cooling only fan coils:

(1) Verify fan coil unit response to room temp set point adjustment.

1. Check blower fan airflow. _____ cfm
2. Check cooling coil water flow. _____ gpm
3. Verify proper operation of cooling water control valve._____
4. Cooling mode inlet air temperature _____deg F
5. Cooling mode outlet air temperature_____deg F
6. Calculate coil sensible capacity and compare to design: Calculated _____BTU/hr Design_____BTU/hr

b. Cooling/heating fan coils:

(1) Verify fan coil unit response to room temp set point adjustment.

1. Check blower fan airflow. _____ cfm
2. Check cooling coil water flow. _____ gpm
3. Verify proper operation of cooling water control valve. ____
4. Check cooling mode inlet air temperature. _____deg F
5. Check cooling mode outlet air temperature. _____deg F
6. Calculate cooling coil sensible capacity and compare to design:
7. Calculated _____BTU/hr Design_____BTU/hr
8. Check heating coil water flow. _____ gpm
9. Verify proper operation of heating water control valve. _____
10. Check heating mode inlet air temperature. _____ deg F
11. Check heating mode outlet air temperature. _____deg F
12. Calculate heating coil capacity and compare to design: Calculated_____BTU/hr design_____BTU/hr

2. Certification: We the undersigned have witnessed the above functional performance tests and certify that the item tested has met the performance requirements in this section of the specifications.

Signature and Date

Contractor's Commissioning Specialist _____

Contractor's Mechanical Representative _____

Contractor's Electrical Representative _____

Contractor's TAB Representative _____

Contractor's Controls Representative _____

Design Agency Representative _____

Contracting Officer's Representative _____

Using Agency's Representative _____

Functional Performance Test Checklist - Unit Heaters

The Contracting Officer will select unit heaters to be spot-checked during the functional performance test. The number of terminals shall not exceed 10 percent. Hot water systems (for hot water unit heaters) must be in operation and supplying design hot water supply temperature water.

1. Functional Performance Test: Contractor shall demonstrate operation of selected unit heaters:

a. Verify unit heater response to room temperature set point adjustment._____
b. Check heating mode inlet air temperature. _____ deg F
c. Check heating mode outlet air temperature. _____ deg F
d. Record manufacturer's submitted fan capacity _____cfm
e. Calculate unit heater capacity using manufacturer's fan capacity and recorded temperatures and compare to design.
f. Calculated_____BTU/hr Design_____BTU/hr

2. Certification: We the undersigned have witnessed the above functional performance tests and certify that the item tested has met the performance requirements in this section of the specifications.

	Signature and Date
Contractor's Commissioning Specialist	_____
Contractor's Mechanical Representative	_____
Contractor's Electrical Representative	_____
Contractor's TAB Representative	_____
Contractor's Controls Representative	_____
Design Agency Representative	_____
Contracting Officer's Representative	_____
Using Agency's Representative	_____

Functional Performance Test Checklist - Steam/Hot Water Converter

For Converter:

1. Functional Performance Test: Contractor shall demonstrate operation of heating system in accordance with specifications including the following: Start building heating equipment to provide load for converter.

a. Verify control system energizes. _____

b. Verify converter senses hot water temperature below set point and control system modulates steam valve. _____

c. Shut off building heating equipment to remove load on heating system. Verify converter steam valve closes after load is removed. _____

2. Verify converter inlet/outlet pressure reading, compare to converter design conditions and manufacturer's performance data.

	DESIGN	ACTUAL
Converter inlet water temp deg F	_____	_____
Converter outlet water temp deg F	_____	_____
Converter inlet steam pressure psig	_____	_____
Determine water flow rate based on pressure drop through converter (GPM)	_____	_____
Determine water flow rate with flow measuring device GPM	_____	_____
Verify that temperature of water is in accordance with outdoor air reset schedule	Current Setpoint _____	Actual Temperature _____

3. Verify proper operation of converter safeties. _____

4. Check and report unusual vibration, noise, etc.

_____

_____

5. Certification: We the undersigned have witnessed the above functional performance tests and certify that the item tested has met the performance requirements in this section of the specifications.

Signature and Date

Contractor's Commissioning Specialist _____

Contractor's Mechanical Representative _____

Contractor's Electrical Representative _____

Contractor's TAB Representative _____

Contractor's Controls Representative _____

Design Agency Representative _____

Contracting Officer's Representative _____

Using Agency's Representative _____

Functional Performance Test Checklist - HVAC Controls

For HVAC System:

The Contracting Officer will select HVAC control systems to undergo functional performance testing. The number of systems shall not exceed 10 percent. Perform this test simultaneously with FPT for AHU or other controlled equipment.

1. Functional Performance Test: Contractor shall verify operation of HVAC controls by performing the Performance Verification Test (PVT) test for that system. Contractor to provide blank PVT test procedures previously done by the controls Contractor.

2. Verify interlock with UMCS system_____.

3. Verify all required I/O points function from the UMCS system_____.

4. Certification: We the undersigned have witnessed the Performance Verification Test and certify that the item tested has met the performance requirements in this section of the specifications.

	Signature and Date
Contractor's Commissioning Specialist	_____
Contractor's Mechanical Representative	_____
Contractor's Electrical Representative	_____
Contractor's TAB Representative	_____
Contractor's Controls Representative	_____
Design Agency Representative	_____
Contractor's Officer's Representative	_____
Using Agency's Representative	_____

- End of Appendix B -

-End of document
-- End of Section --

SECTION 23 09 33.00 40

ELECTRIC AND ELECTRONIC CONTROL SYSTEM FOR HVAC
08/10

PART 1 GENERAL

1.1 REFERENCES

The publications listed below form a part of this specification to the extent referenced. The publications are referred to within the text by the basic designation only.

AMERICAN SOCIETY OF HEATING, REFRIGERATING AND AIR-CONDITIONING ENGINEERS (ASHRAE)

ASHRAE 90.1 - IP	(2010; ERTA 2011-2013) Energy Standard for Buildings Except Low-Rise Residential Buildings
ASHRAE 90.1 - SI	(2010; ERTA 2011-2013) Energy Standard for Buildings Except Low-Rise Residential Buildings

AMERICAN WELDING SOCIETY (AWS)

AWS WHB-2.9	(2004) Welding Handbook; Volume 2, Welding Processes, Part 1

ASME INTERNATIONAL (ASME)

ASME B16.22	(2013) Standard for Wrought Copper and Copper Alloy Solder Joint Pressure Fittings
ASME B40.100	(2013) Pressure Gauges and Gauge Attachments

ASTM INTERNATIONAL (ASTM)

ASTM A666	(2010) Standard Specification for Annealed or Cold-Worked Austenitic Stainless Steel Sheet, Strip, Plate and Flat Bar
ASTM B117	(2011) Standard Practice for Operating Salt Spray (Fog) Apparatus
ASTM B280	(2013) Standard Specification for Seamless Copper Tube for Air Conditioning and Refrigeration Field Service
ASTM B62	(2009) Standard Specification for Composition Bronze or Ounce Metal Castings
ASTM D1693	(2013) Standard Test Method for Environmental Stress-Cracking of Ethylene Plastics

INTERNATIONAL SOCIETY OF AUTOMATION (ISA)

ISA 7.0.01	(1996) Quality Standard for Instrument Air
ISA RP60.9	(1981) Piping Guide for Control Centers

NATIONAL ELECTRICAL MANUFACTURERS ASSOCIATION (NEMA)

NEMA DC 3	(2013) Residential Controls - Electrical Wall-Mounted Room Thermostats

NATIONAL FIRE PROTECTION ASSOCIATION (NFPA)

NFPA 90A	(2015) Standard for the Installation of Air Conditioning and Ventilating Systems

SOCIETY FOR PROTECTIVE COATINGS (SSPC)

SSPC SP 6/NACE No.3	(2007) Commercial Blast Cleaning

U.S. DEPARTMENT OF DEFENSE (DOD)

DOD-G-24508	(1977; Rev A; Am 4 1998) Grease, High Performance, Multipurpose (Metric)
MIL-F-18280	(1995; Rev F; Supp 1; CANC Notice 1) Fittings, Flareless Tube, Fluid Connection

U.S. GENERAL SERVICES ADMINISTRATION (GSA)

CID A-A-2962	(Rev A; Notice 2) Enamel, Alkyd, Gloss, Low VOC Content
FED-STD-595	(Rev C; Notice 1) Colors Used in Government Procurement

1.2 SYSTEM DESCRIPTION

1.2.1 General Requirements

Section 23 00 00 AIR SUPPLY, DISTRIBUTION, VENTILATION, AND EXHAUST SYSTEMS applies to work specified in this section.

Submit Material, Equipment, and Fixture Lists for control and instrumentation systems including manufacturer's style or catalog numbers, specification and drawing reference numbers, warranty information, and fabrication site information.

Submit Records of Existing Conditions consisting of the results of survey of work area conditions and features of existing structures and facilities within and adjacent to the jobsite. Commencement of work constitutes acceptance of existing conditions.

1.2.2 System Requirements

Provide automatic temperature control systems that are complete in all details and that include all necessary accessories to maintain conditions indicated or specified.

Provide electric/electronic automatic temperature control systems. As far as practical, provide control equipment that is the product of a single automatic control systems manufacturer. Provide automatic control systems components not the product of the control system manufacturer that are approved for use with the control system as indicated.

Provide automatically controlled valves to control environment that are furnished by the automatic control systems manufacturer.

Provide automatically controlled dampers, independent of dampers integral with manufactured air-handling units, furnished by the automatic control systems manufacturer. Use a damper manufacturer that is licensed to display the AMCA seal.

Provide dual-duct system mixing boxes and air-mixing valve operators that are furnished by the automatic control systems manufacturer.

Submit Fabrication Drawings for control and instrumentation systems consisting of fabrication and assembly details to be performed in the factory.

Submit Operating Instructions for control and instrumentation consisting of standard operating procedures including startup, shutdown, and emergency operation.

1.3 QUALITY ASSURANCE

1.3.1 Material and Equipment Qualifications

Provide materials and equipment that are standard products of manufacturers regularly engaged in the manufacture of such products, which are of similar material, design and workmanship. Provide standard products that have been in satisfactory commercial or industrial use for 2 years prior to bid opening that includes applications of equipment and materials under similar circumstances and of similar size. Provide a product that has been for sale on the commercial market through advertisements, manufacturers' catalogs, or brochures during the 2-year period.

1.3.2 Alternative Qualifications

Products having less than a two-year field service record are acceptable if a certified record of satisfactory field operation for not less than 6000 hours, exclusive of the manufacturer's factory or laboratory tests, are shown.

1.3.3 Service Support

Support the equipment items by service organizations. Submit a certified list of qualified permanent service organizations for support of the equipment which includes their addresses and qualifications. Provide service organizations that are reasonably convenient to the equipment installation and able to render satisfactory service to the equipment on a regular and emergency basis during the warranty period of contract.

1.3.4 Manufacturer's Nameplate

Provide each item of equipment with a nameplate bearing the manufacturer's name, address, model number, and serial number securely affixed in a conspicuous place; the nameplate of the distributing agent is not

acceptable.

1.3.5 Modifications of References

In each of the publications referred to herein, consider the advisory provisions to be mandatory, wherever the words shall, should, will, would, or may appear. Interpret references in these publications to the "authority having jurisdiction," or words of similar meaning, to mean the "Contracting Officer."

1.4 SUBMITTALS

Government approval is required for submittals with a "G" designation; submittals not having a "G" designation are for information only. When used, a designation following the "G" designation identifies the office that reviews the submittal for the Government. Submittals with an "S" are for inclusion in the Sustainability Notebook, in conformance to Section 01 33 29 SUSTAINABILITY REPORTING. Submit the following in accordance with Section 01 33 00 SUBMITTAL PROCEDURES:

SD-01 Preconstruction Submittals

Material, Equipment, and Fixture Lists; G

Records of Existing Conditions; G

SD-02 Shop Drawings

Fabrication Drawings

Installation Drawings

SD-03 Product Data

Control Components; G

Thermometers; G

Pressure Gages; G

Valves; G

Dampers; G

Operators; G

SD-04 Samples

Manufacturer's Standard Color Charts

Thermostat Covers

Thermostat Guards

Room Humidistats

SD-06 Test Reports

Set Points And Final Adjustments Of Controls; G

Test Reports; G

SD-07 Certificates

Listing of Product Installations; G

Qualified Permanent Service Organizations; G

Manufacturer's Standard Factory Finishing; G

SD-08 Manufacturer's Instructions

Operating Instructions; G

SD-10 Operation and Maintenance Data

Operation and Maintenance Manuals; G

Scheduled Instructional Services; G

Air Supply Source; G

Mechanical Refrigeration-Type Air Dryer; G

1.5 STORAGE AND HANDLING

Seal openings after manufacturing and inspection, until ready for installation.

Carefully handle instruments and equipment, do not subject to shock, and protect from weather, dust, construction materials, and damage.

1.6 ACCESSIBILITY

Install all work so that parts requiring periodic inspection, operation, maintenance, and repair are readily accessible. Install concealed valves, expansion joints, controls, dampers, and equipment requiring access, in locations freely accessible through access doors.

1.7 ELECTRICAL REQUIREMENTS

Furnish motors, controllers, disconnects and contactors with their respective pieces of equipment. Provide motors, controllers, disconnects and contactors that conform to and have electrical connections provided under Section 26 20 00 INTERIOR DISTRIBUTION SYSTEM. Furnish internal wiring for components of packaged equipment as an integral part of the equipment. Extended voltage range motors are not permitted. Provide controllers and contactors that have a maximum of 120 volt control circuits, and have auxiliary contacts for use with the controls furnished. When motors and equipment furnished are larger than sizes indicated, include the cost of additional electrical service and related work under the section that specified that motor or equipment. Provide power wiring and conduit for field installed equipment under and conforming to the requirements of Section 26 20 00 INTERIOR DISTRIBUTION SYSTEM.

PART 2 PRODUCTS

Submit Equipment and performance data for the following items consisting of use life, system functional flows, safety features, and mechanical automated details. Submit curves indicating tested and certified equipment response and performance characteristics.

a. Control Components

b. Thermometers

c. Pressure Gages

d. Valves

e. Dampers

f. Operators

2.1 CONTROL COMPONENTS

2.1.1 Temperature Sensors

Provide temperature sensors, sensor transmitters, and controller output signals that are directly proportional to the variations in the measured variable. Provide linearity that is within plus or minus 1/2 percent for a 200 degrees F span, and plus or minus 1 percent for a 50 degrees F span, throughout the scale range.

Where extremely accurate temperature sensing is required or the transmitter is a considerable distance from the receiver controller, use a two-pipe relay-type transmitter. Provide instrument that has feedback incorporated into the design and 50 degrees F temperature range. Provide capillary that is compensated and is available in short style 8 and 16-foot averaging lengths. Provide unit that operates on 20 pounds per square inch (psi) input pressure, and has a 3 to 15-psi output over the specified range.

2.1.2 Humidity Sensors

Provide humidity sensors, sensor transmitters, and controller output signals that are directly proportional to the variations in the measured variable. Provide linearity that is within plus or minus 1 percent for a 70 -percent relative humidity span. Provide element that is capable of withstanding 98 percent relative humidity without loss of calibration when humidity sensor is duct-mounted downstream from a cooling coil.

2.1.3 Receiver Controllers

Provide receiver controllers that have a calibrated set point adjustment, minimum calibrated scale with no greater than2 degrees F degrees divisions for duct and immersion application and 1 degrees F divisions for room control application. Provide set point indication and an adjustable proportional band covering the complete range necessary for the specific application. Provide controller range that matches that of the temperature sensor. Provide devices that incorporate authority and remote set point calibrated adjustments, as required.

2.1.4 Receiver Indicators

Provide receiver indicators that have visual readout for temperature and humidity, using the transmitted signal from the sensor device to the receiver-controller device. Provide readout and accuracy of the receiver indicator that has the indicated value within plus or minus 1/2 percent of the span of the measured variable, as transmitted by the sensor. Mark factory calibration on back of instrument. Provide range that matches that of the temperature or humidity sensor.

Provide a combined accuracy of the sensor and the receiver indicator that is within 2 degrees F and 5 percent relative humidity of the span.

Provide ambient conditions to 150 degrees F that do not cause a shift in control point in pneumatic sensor, receiver controller, or indicator systems.

2.1.5 Space Thermostats

2.1.5.1 Electrical Control

Provide low-voltage type space thermostat with setback/setup temperature control for cooling and heating. Provide thermostat that conforms to NEMA DC 3, and is as indicated.

2.1.5.2 Pneumatic Control

Provide the adjustable proportioning type space thermostat containing dual bimetallic elements, one for heating and one for cooling.

Provide thermostats that have locking covers and built-in concealed thermostats.

Thermostats with field-adjustable or removable set point limits are not permitted.

Provide thermostats that conform to ASHRAE 90.1 - IP, ASHRAE 90.1 - SI and that have temperature restrictions as indicated.

2.1.5.3 Space Thermostat Accessories

Provide brushed aluminum Thermostat covers.

Provide insulating bases for thermostats located on exterior walls.

Provide cast-metal Thermostat guards in unfinished spaces.

Mount guards and thermostats on separate bases.

Submit Manufacturer's standard color charts showing the manufacturer's recommended color and finish selections.

2.1.6 Outdoor Reset Thermostat

Provide a remote-bulb type outdoor reset thermostat for proportioning action with an adjustable throttling range. Provide scale range of 35 to 95 degrees F with adjustable set point over the full range. Mount unit indoors, with sensing bulb mounted outdoors with solar compensation when indicated. Provide unit that proportionally resets the control point of a

remote sensing submaster temperature controller.

2.1.7 Immersion Thermostats

Provide remote-bulb type immersion thermostats, for proportional action with adjustable set point over the full operating range, and adjustable throttling range. Provide a nonferrous separable socket for each thermal element.

When used as a secondary controller, provide a remotely set adjustable set point.

2.1.8 Airstream Thermostats

Provide remote-bulb type or functionally equivalent bimetallic rod and tube type airstream two-position thermostats, with adjustable set point. Provide set point in middle third of range of device.

Provide airstream thermostats for control of modulating devices that are the remote-bulb type for proportional action with adjustable set point over the full operating range, and adjustable throttling range.

Provide airstream thermostats for averaging service that have a remote-bulb element not less than one-half as long as the longest side of the airstream cross section, of a type suitable for averaging service with liquid-filled bulb or equivalent. Gas- or vapor-filled bulbs are not acceptable for averaging service. Locate bulb to sense average temperature.

Provide airstream temperature primary controllers for remote reset or compensating operation, that are remote-bulb type for proportional operation with adjustable set point over the full operating range, adjustable throttling range, and an adjustable authority of the secondary controller. Low- or high-limit thermostats, or other instruments having one-sided control, are not acceptable where reset or compensating controllers are indicated.

2.1.9 Line-Voltage Thermostats

Provide line-voltage thermostats that have integral "MANUAL ON/OFF/AUTO" selector switch, a maximum differential of 2 degrees F, concealed temperature adjustment, and a locking cover. Provide line-voltage thermostats that are rated for the load, two-pole as required.

Provide insulating bases for thermostats located on exterior walls.

Provide cast metal type thermostat guards in unfinished spaces.

Mount guards and thermostats on separate bases, unless otherwise approved.

Provide line-voltage thermostats that are furnished and mounted under this section, and wired in accordance with applicable sections of DIVISION 26 ELECTRICAL unless otherwise specified.

2.1.10 Electrical Low-Limit Duct Thermostat

Provide air-handling unit freeze protection. Make the lowest temperature across any 12 inches of bulb length, single tube, sufficient to trip a snap-acting, single-pole, single-throw switch when the temperature sensed is equal to, or below, set point. Provide 20 foot minimum length of

bulb. Provide one limit thermostat for every 20 square feet of coil surface. Provide thermostats that have manual reset.

2.1.11 Fire Thermostats

Provide fire thermostats that are UL-approved and listed, are factory set in accordance with NFPA 90A, and have normally closed contacts. Perform reset manually.

2.1.12 Heating/Cooling Valve-Top Thermostat

Furnish induction air-conditioning units with valve-top thermostats. Provide units that are proportional acting for proportional flow, remote-bulb liquid-filled element, direct and reverse acting at variable pressures to maximum 25 pounds per square inch, gage (psig) air supply. Provide molded rubber operator diaphragm, die-cast housing, and furnish unit with position indicator and adjusting knob.

2.1.13 Room Humidistats

Provide room humidistats that are wall-mounted, reverse acting, proportioning type, with adjustable minimum throttling range no greater than 2 -percent relative humidity. Provide humidistats that are capable of maintaining the relative humidity within the limits of the throttling range for relative humidity of 30 to 80 percent and temperatures to 110 degrees F.

Submit manufacturer's standard color charts showing the manufacturer's recommended color and finish selections.

2.1.14 Duct Humidistats

Provide insertion type duct humidistats, mounted on outside of duct, with sensing element within duct. Provide reverse acting, proportioning type duct humidistats, with adjustable minimum-throttling range no greater than 2 percent relative humidity. Provide humidistats capable of maintaining relative humidity within the limits of the throttling range for relative humidity of 20 to 80 percent and temperatures to 150 degrees F. Provide sensing element suitable for the indicated installation location.

2.1.15 High-Limit Duct Humidistats

Provide insertion type high-limit duct humidistats, mounted on outside of duct, with sensing element within duct. Provide reverse acting, two-position type humidistats, with minimum differential no greater than 2 percent relative humidity. Provide sensing element suitable for the indicated installation location.

2.1.16 Water Temperature Controllers

Insert water temperature controller in a nonferrous separable socket installed in the waterline. Provide controller that operates integrally on an adjustable differential over an adjustable temperature range, and is suitable for operating in conjunction with the control valve provided.

2.1.17 Building Static-Pressure Transmitter

Provide a double-bell, differential type building static-pressure transmitter with temperature compensation. Provide scale range of minus 0.5 to plus 0.5 inch water gage (wg), and sensitivity within plus or minus

0.0005 inch wg. Provide transmitter that transmits an electronic signal to an indicating receiver with a matched scale range.

Provide a total system accuracy of not less than 0.05 inch wg.

2.1.18 Building Static-Pressure Controller

Provide a double bell, differential type building static-pressure controller with temperature compensation. Provide scale range of minus 0.5 to plus 0.5 inch wg, and sensitivity within plus or minus 0.05 inch wg. Provide controller with an adjustable set point over the full-scale range and adjustable throttling range, proportional band. Provide electronic output.

2.1.19 Pressure Transmitter

Provide the indicating type pressure transmitters for gas, liquid, or steam service. Provide transmitter range suitable for system operating characteristics. Provide output that is proportional to system pressure and is electronic or pneumatic. Provide indicating receiver with a matched scale range.

Provide total system accuracy that is not less than 1/2 percent of system range.

2.1.20 Remote Pressure Transmitter

Provide pressure sensors for gas, liquid, or steam service remote indication that are pressure-to-current type. Provide direct current output and power supply that is compatible with the remote readout indicator.

2.1.21 Remote Element Instruments

Provide remote element instruments that have sufficient length of capillary to mount the instrument on the control panel in an accessible location. Provide excess capillary that is coiled and concealed. Provide armored capillary where indicated.

2.1.22 Airflow Switches

Provide UL approved airflow switches, with pressure range of 0.12 to 10 inches wg, and electrical rating of 220 volts ac, 5 ampere and 3/4 horsepower ac pilot duty.

2.1.23 Pneumatic Relays

Provide direct relays.

2.1.24 Switches

Provide switches as indicated.

Provide adjustable switches with indicating plates and accessible adjustment. Calibrate and mark minimum-positioning switches that control dampers in percent of maximum airflow determined by airflow test.

2.2 THERMOMETERS

Provide thermometers adjacent to thermostats with nonferrous separable sockets when in immersion service. Select thermometer scale range according to service. Provide thermometers that are readable from operating level.

Provide dial type temperature indicators that have a 3 inch diameter antiparallax dial face with white background and black markings.

Provide micrometer maximum-registering type pointer with external calibrator adjustment. Provide accuracy within 1 percent of dial range.

Provide cast aluminum , bottom-connection type case, with chrome-plated close-type ring.

Provide solid liquid activating medium.

Provide stem length that is 1/2 inch taper pipe thread, fixed thread.

Provide dial type thermometers or thermometers with a minimum 9 inch vertical scale.

Provide temperature sensor, sensor transmitter, and output signals that are directly proportional to the variations in the measured variable. Provide linearity that is within plus or minus 1/2 percent throughout the scale range for a 200 degrees F span, and plus or minus 1 percent for 50 degrees F span.

When the transmitter is over 50 feet from the receiver indicator, use a signal booster to improve signal response. Provide a transmitter that has feedback incorporated in the design and has a 100 degrees F temperature range. Provide capillary that is compensated and is available in short style, 8 to 18 foot averaging lengths. Provide unit that operates on a20 psi input pressure and has a 3 to 15 psi output over the specified range.

For multizone units, provide each zone discharge duct with a remote-reading panel-mounted dial thermometer. Locate sensor not less than 10 fwwr downstream of the mixing dampers or other device causing air turbulence.

2.3 PRESSURE GAGES

Provide pressure gages used to indicate supply and outlet air pressures of automatic control instruments that are the manufacturer's standard, minimum 3-1/2 inch diameter.

2.4 CONTROL SYSTEM VALVES

Provide bronze valve bodies, 2 inch iron pipe size (ips) and smaller, with screwed end connections. If 2-1/2 inch ips and larger, provide cast iron valve bodies with flanged end connections.

Provide single seated valves for dead-end service except where otherwise indicated.

Provide modulating service valves with plugs matched to the characteristics of the coil for effective control. Provide tetrafluoroethylene, spring-loaded, and self-adjusting valve-stem packing.

Provide top and bottom guided and AISI, Type 303 corrosion-resistant steel valve stem. Cage construction is acceptable.

Provide valves with position indicators and, where indicated or required for proper operation, provide with positioners.

Provide valve linkage with an adjustment for valve lift.

2.4.1 Hydronic

Provide hydronic system valve bodies and trim that are rated for service pressures through 125 psi at 250 degrees F.

Provide hydronic system valves that have replaceable plugs and seats of AISI, Type 303 corrosion-resistant steel, selected for maximum life depending on application conditions.

Provide maximum pressure drop across any hydronic system valve at maximum flow of 5 feet of water.

2.4.2 Steam

Provide steam valve bodies and trim that are rated for service pressures through 125 psi saturated steam.

Provide steam valve replaceable plugs and seats that are AISI, Type 440C corrosion-resistant steel hardened to not less than 500 Brinell.

Provide maximum pressure drop across any steam valve at maximum flow as indicated.

2.5 PNEUMATIC SYSTEMS ACCESSORIES

Provide pipe connections in air lines at each pneumatic room controller to connect gages for testing.

2.5.1 Control and Instrumentation Tubing

Provide copper tubing with 1/4 inch outside diameter that is annealed seamless copper, conforming to ASTM B280.

Provide solder joint, wrought copper fittings, conforming to ASME B16.22.

Provide compression type, forged brass ball-sleeve conforming to SAE, Type 72 UL-approved, conforming to MIL-F-18280, with minimum pressure rating of 200 psi at 100 degrees F.

Provide 95-5 tin-antimony solder, alloy Sb5, conforming to AWS WHB-2.9.

Provide black virgin polyethylene tubing, meeting stress crack test performed in accordance with ASTM D1693. Provide multi-tube harness material as specified above, with polyester film barrier and vinyl jacket not less than 0.062 inch thick.

Provide ball-sleeve compression type fittings, aluminum, with internal sleeves.

2.5.2 Valves

2.5.2.1 Diaphragm Control and Instrument Valves (DCIV)

Provide diaphragm valves in sizes 1/4 and 3/8 inch that have a forged brass body with reinforced tetrafluoroethylene diaphragm, AISI 300 series corrosion-resistant steel spring, and round phenolic handle. Provide handle that is fitted with disks color coded in accordance with ISA RP60.9.

2.5.2.2 Gage Cocks

Provide T-head gage cocks, with washer and screw, constructed of polished ASTM B62 bronze and rated for 125-psi saturated-steam service. Provide end connections that suit the service.

2.5.3 Air-Pressure Reducing Stations

2.5.3.1 Pressure-Reducing Stations

Install pressure-reducing station complete with pressure-reducing valve, particle filter, valved bypass, pressure indicator upstream of station, pressure indicator downstream of station, and regulated air-pressure relief valve.

2.5.3.2 Pressure Regulators

Provide pressure regulator body that is constructed of aluminum die castings rated for the service. Provide a reinforced air-, oil-, and water-resistant elastomer diaphragm. Provide nonferrous metallic for all components exposed to the fluid stream being controlled. Provide a balanced-construction relieving type valve to automatically prevent excessive pressure buildup. Provide valve that produces an essentially flat, reduced pressure curve for the capacity demand of the system.

2.5.3.3 Particle Filters

Provide filters that are constructed of aluminum die castings, rated for the service, and furnished with ips connections. Provide aluminum bowl material. Provide filter that is serviceable by quick-disconnect devices. Provide bowl that is equipped with manual draincock. Separate liquid particles by centrifugal and quiet zone action. Remove solid particles, to 15 micrometer, by filter elements of corrosion-resistant steel mesh.

2.5.3.4 Combination Filter/Regulators

Combination manual drain filter/regulator units conforming to the above requirements are acceptable in lieu of separate units.

2.5.3.5 Airborne-Oil Filter

Provide a filter with filtration efficiencies of 99.9 percent for particles of 0.5 micrometer or larger in addition to removing 99.4 percent of2.0 -micrometer and larger particles of airborne lubricating oil. Provide filter pressure/temperature ratings of 150 psi and 150degrees F, respectively.

2.5.3.6 Pressure Relief Valves

Provide pressure relief valves that are rated for the pressure of the high-pressure side and sized for the full installed capacity of the

pressure regulating station at the pressure of the low-pressure side. Set valve at not more than 20 percent above the correct low-side pressure. Provide seat material suitable for the service.

2.5.4 Pressure Gages

Provide pressure gages that conform to ASME B40.100 and as indicated. Provide pressure gages that are Type I, gage for air, steam, oil, and water, Class 1, pressure gage, with range as indicated. Provide 3-1/2 inch nominal diameter sized pressure-gage. Provide AISI 300 series corrosion-resistant steel case with No. 4 standard commercial polish, or better, conforming to ASTM A666. Provide gages that are equipped with adjustable marking pointer and damper screw adjustment in inlet connection. Provide gages that have safety case, safety glass, and blowout plug.

2.6 INSTRUMENT AIR SUPPLY

2.6.1 Air Supply Source

Supply instrument air from a central, dry, compressed-air header, complete with filter, pressure-reducing valve, pressure-relief valve, upstream and downstream pressure gages, and shutoff and bypass valves.

Provide a vibration-isolated, simplex, instrument-air, compressor/receiver unit, complete with base, motor controller, automatic pressure-regulating controls, off/automatic selector switch, mechanical and electrical safety devices, filter-silencer intake, and complete intercomponent piping and wiring ready for terminal connections. Provide a standard unit of the temperature-controls manufacturer sized to supply the entire control-air requirements for all connected systems on the basis of not more than 20 minutes of compressor operation in any 1 hour of total connected control-systems operation.

Provide compressor that is of oil-free construction.

Provide vibration isolation that consists of stable springs, with not less than 2 inches deflection and not less than 1 inch freeboard underload to support compressor/receiver assembly.

Install a wire-braid reinforced rubber hose from the compressed air connection to the distribution header.

2.7 POWER-OPERATED DAMPERS

2.7.1 Frame and Blade Assembly

Provide frames and blades that are constructed of extruded aluminum .

Provide mechanically attached, field replaceable resilient seals. Attachment by adhesive is not acceptable. Provide neoprene .

Provide frames that have corner reinforcement and stay rods, where necessary. Provide frames that are fabricated by welding or riveting. Repair damaged galvanized surfaces by coating with an equal weight of zinc.

For static pressures in excess of 3 inches wg, provide master-blade-driven dampers with blades longer than 24 inches with a maximum blade width of 8 inches. Provide maximum blade width for other services of 10 inches. Provide 48 inches maximum blade length. For dampers more than 48 inches

wide, provide dampers that are made in two or more sections with intermediate mullions; with each section mechanically interlocked with adjoining section or sections.

Provide minimum shaft size of 1/2 inch, round .

Where linkage is such that operator torque is applied to a master blade and transmitted therefrom, provide a master blade that is reinforced and a shaft that is full length. This type construction is limited to 2 inch wg, static pressure.

Provide blades that are attached to round shafts by hardened cup-point setscrews, or by being pinned. Provide a minimum three-thread engagement. Where setscrews are used, provide two setscrews, 90 degrees apart, to secure master blade. Secure shaft end retainers by pins or spring washers in grooved shaft or by similar construction.

Caulk frames with elastomer compounds to prevent bypass leakage.

Provide maximum leakage of dampers of 5%.

2.7.2 Bearings

Provide graphite-impregnated nylon sleeve type shaft bearings, except as otherwise indicated. Provide thrust washers at bearings, when necessary to maintain blade alignment.

Provide single row, unground, flanged, radial, antifriction type shaft bearings with extended inner race suitable for press mounting in damper frame. Provide AISI type 316 corrosion-resistant steel bearing materials. Provide lubricant free bearings. Mark operation and maintenance manual, and attach instructions to the damper frame noting: "DO NOT LUBRICATE CORROSION-RESISTANT STEEL BEARINGS." Factory sealed, shielded carbon-steel ball bearings are acceptable provided lubricant conforms to DOD-G-24508.

Provide graphite-impregnated nylon linkage pivot bearings.

2.7.3 Installation

Install dampers in accordance with the manufacturer's instructions.

2.8 CONTROL SYSTEM VALVE AND DAMPER OPERATORS

2.8.1 Operators

Provide motor operators that provide smooth proportional control under operating conditions normal to the system.

Provide spring-return operators for two-position control.

Provide spring returns on reversible operators where required for fail-safe operation.

For operators operating in sequence with other operators, provide operators that have adjustable operating ranges and set points.

Provide operators that have sufficient power on closeoff to provide tight sealing against maximum system pressures.

Provide operators that close valves and dampers to fail-safe position indicated.

2.8.2 Dampers

Provide dampers that are equipped with operators of sufficient power to control dampers, without flutter or hunting, through the entire operating range at air velocities at least 20 percent greater than maximum design velocity.

2.8.3 Pneumatic Operators

Provide positioners where two or more operators are controlled from the same controller, and where indicated. Mount positioners directly on the driven device. Provide feedback from the stem through a pilot spring. Provide adjustable starting point from 2 to 12 psi. Provide adjustable operating span from 5to 13psi.

2.8.4 Electric Operators

Provide reversible type electric motor operators for modulating control.

Provide split-phase type electric motor operators with oil-immersed gear train. Provide motor that has ample capacity to handle applied loads under operating conditions normal to the system. Heat locations where temperatures fall below minimum operating temperature of operator.

2.9 CENTRAL CONTROL CABINET

Provide a free-standing modular type control cabinet with hinged, locking access door, one per module.

Provide a 60-mil thick, high-pressure laminate-covered writing surface and recessed storage drawers with locks.

2.9.1 Cabinet Construction

Provide cabinets made of aluminum, suitably reinforced and braced to provide a flat-faced, rigid-front panel.

Provide surfaces that are free of scale, welding slag, and dirt, and are flat without waves. Do not distort or buckle the cabinet during installation handling.

Provide square cutouts with panels to ensure that instruments are installed level and square.

Make finished cutouts and holes free of burrs and sharp edges. Provide cutouts made up of fabricated sections in sizes suitable for handling. Provide neat and straight section joints. Securely fasten together and align cabinets, and securely wall or floor anchor each cabinet, as required.

Provide high-grade steel exterior hardware with chrome-plated finish.

Provide cadmium-plated steel interior hardware.

Provide access doors with hinges, latches, and locks. Provide sufficiently sturdy cabinet frames to prevent doors from sagging when open. Provide latches to hold doors open at 90 degrees and provide roller latches to hold doors closed. Furnish keys that are common to all access door locks.

2.9.2 Finish

Clean surfaces in accordance with SSPC SP 6/NACE No.3. Provide blast pattern that has a maximum surface profile of 2.0 mils. Not more than 8 hours after cleaning, follow the manufacturer's standard procedure for priming and finish painting. Conform to CID A-A-2962 or FED-STD-595 for final coat, semi-gloss green enamel for all external surfaces. Use soft gloss white paint for interior surfaces. When painting is not started within 8 hours after cleaning, reclean surfaces before painting.

2.9.3 Graphic System Portrayal

Provide cabinets with individual modules portraying systems configurations. Provide portrayals by approved color-coded graphic tapes in laminated plastic securely fastened to the front panel. Provide beveled edges that are finished smooth and free of waves, scratches, or gouges. Identify instruments and auxiliary equipment by engraved plastic labels. Tape is not acceptable.

2.9.4 Instruments and Components

Obtain approval of instruments prior to installation. Provide clean instruments that are free of foreign matter.

Provide pipe connections in air lines at each pneumatic room controller to connect gages for testing.

2.9.4.1 Receiver-Type Indicator

Provide receiver-type dial size indicators as indicated.

Provide indicator cases that are made of drawn steel, flush mounted with three equally spaced panel clamps and panel cutout to match indicator as furnished.

Provide bourdon tube of material and construction suitable for 3 to 15 psig input.

Accomplish indicator movement by approved manufacturer's standard practice.

Provide a dial with black numerals and graduating marks on a flat white background.

Provide fixed needle pointer.

Provide indicator calibration by means of calibration screw on face of indicator, with dial accuracy to within 1 degree F in the applicable range.

Provide scale ranges that operate full scale between 3 and 15 psig, with scale ranges as indicated.

2.9.4.2 Electronic Temperature Indicator

Provide electronic temperature indicator that indicates the sensor input throughout the operating range of the system. Provide accuracy within plus or minus 1/2 percent of the system range. Provide input that is proportional to the measured variable. Provide scale range of minus 20 to plus 200 degrees F.

2.9.4.3 Electronic Pressure Indicator

Provide electronic pressure indicator, calibrated in inches wg, that indicates the pressure drop through range of transmitter. Provide accuracy of not less than plus or minus 0.05 inch wg.

2.9.4.4 Remote Control Point Adjuster

Provide remote adjustment for resetting the set point of the control device in 2-degree increments for the full range of the control span.

2.9.4.5 Manual Minimum Position Switch

Provide manual minimum position switch that has an adjustable minimum output between 3 and 13 psi, that is furnished with a calibrated 0 to 100 percent set point scale with scale divisions of 5 or less, and that has a set point-locking adjustment knob. Provide a switch suitable for a maximum pressure of not less than 25 psig.

2.9.4.6 Remote Temperature Transmitter

Provide remote temperature transmission of discharge air and space temperature that transmits a signal in proportion to the measured temperature to an electronic thermometer in the central control panel. Provide plus or minus 0.5 degree F total system accuracy.

2.9.4.7 Remote Filter Pressure Transmitter

Provide filter pressure-drop transmitter that transmits an electronic signal to a common pressure indicator, calibrated in inches wg, at the control center. Provide accuracy of not less than plus or minus 0.05] inch wg. Provide pressure transmitter range from 0 to 6 inches wg.

2.9.5 Panel Instrument Tubing

Provide copper or black polyethylene instrument tubing within panels. Provide tubing connections at panels that are made with through-bulkhead type fittings.

Neatly install and properly support tubing. For instruments and accessories mounted on hinged access panels, provide sufficient flexible tubing to allow the door to open at least 135 degrees. Tie flexible tubing into a single cable.

Provide pressuretight fittings and joints, and as indicated.

2.10 INDIVIDUAL SYSTEM CONTROL PANELS

Provide each air handling system with an individual control panel mounted adjacent to and vibration isolated from the air handling unit.

Provide manufacturer's standard steel construction control panel of adequate gage and sufficient reinforcement to be completely rigid. Provide manufacturer's color finish approved by the Contracting Officer. Provide mechanically attached, engraved, 1/8 inch thick, laminated, black and white plastic identification plates. Locate panel as indicated.

Provide panel that contains a thermometer for each duct or immersion

thermostat, as indicated, and for electropneumatic and pneumoelectric switches not connected to starters, pilot lights for fan air filters, pump motors, filter runout pilot lights, air switches, or other accessories, as indicated. Provide panel that contains all controllers, recorders, and other instruments, including a 1-1/2 inch gage showing pressure of primary air to pneumatic controllers; and 1-1/2 inch gages showing pressures of controlled air from each controller, other than room controllers.

2.11 FACTORY FINISHING

Manufacturer's standard factory finishing systems is acceptable with certification that the factory painting system applied withstands 125 hours in a salt-spray fog test, and equipment located outdoors withstands 500 hours in salt-spray fog test. Perform salt-spray fog test in accordance with ASTM B117, and for that test the acceptance criteria are the following: immediately after completion of the test, the paint shows no signs of blistering, wrinkling, or cracking, and no loss of adhesion; and the specimen shows no signs of rust creepage beyond 0.125 inch on either side of the scratch mark.

Provide a film thickness of not less than the film thickness used on the test specimen for the factory finishing system applied on the equipment. If manufacturer's standard factory finishing system is being proposed for use on surfaces subject to temperatures above 120 degrees F, provide a factory finishing system designed for the temperature service.

PART 3 EXECUTION

3.1 INSTALLATION

Install control components using qualified control and instrumentation specialists working under the direction of the manufacturer's representative.

Install in accordance with the manufacturer's instructions and as indicated.

Submit Installation Drawings and include details of equipment room layout and design.

Provide Listing of Product Installations for controls and instrumentation systems that include identification of at least 5 units, similar to those proposed for use, that have been in successful service for a minimum period of 5 years. Include purchaser, address of installation, service organization, and date of installation on list.

3.2 CONTROL- AND INSTRUMENT-AIR TUBING INSTALLATION

Conceal tubing, except in mechanical rooms or areas where other piping is exposed.

Neatly nest multiple tube runs.

Mechanically attach tubing to supporting surfaces. Supporting adhesives are not acceptable. See additional requirements under Section 23 05 48.00 40 VIBRATION AND SEISMIC CONTROLS FOR HVAC PIPING AND EQUIPMENT.

Make tubing penetrations in concrete surfaces through minimum, 1 inch ips, Schedule 40, rigid, unplasticized, polyvinylchloride (PVC) sleeves. Extend sleeves 6 inches above floors and 1 inchbelow bottom surface of slabs.

Where water- or vapor-barrier sealing is required, apply 1/2 inch deep elastomer caulk to surfaces cleaned free of oil and other deleterious substances.

Purge tubing with dry, oil-free compressed air to rid system of impurities generated during joint making and installation and to remove atmospheric moisture before connecting control instruments.

3.2.1 Copper Tubing

Cut tubing with mechanical joints square and remove burrs. Do not work-harden copper surfaces. Cut off or anneal tube ends by heating and air cooling in accordance with the manufacturer's instructions.

Cut copper tubing for solder joints square and remove burrs. Clean inside surfaces of fittings and outside surfaces of tubes in joint area before assembly of joint. Apply joint flux, filler material, and heat source in accordance with the manufacturer's instructions. Provide valves in copper piping that have screwed ends with end adaptors to suit mechanical connections, unless solder jointing is otherwise indicated. Remake copper joints that fail pressure tests with new materials, including pipe or tubing fittings and filler metal.

Use hard-drawn copper tubing in all exposed areas. Use hard drawn where tubing is concealed.

Provide wrought-copper solder-joint type fittings for supply system copper tubing except at connection to apparatus where using specified brass mechanical and ips thread-adapter fittings. Tool-made bends in copper tubing are acceptable in lieu of fittings.

Provide annealed copper-tubing runs embedded in concrete and protect by metallic conduit.

Provide copper tubing horizontal supports for less than three tubes that are rigid 1- by 3/8 inch metal channel and are proprietary metal tube race for three or more tubes.

Provide jointless copper tubing runs in soil that are protected by 12-mil thick bituminous coating .

3.2.2 Plastic Tubing

Use plastic tubing, sheathed , except as otherwise indicated, in lieu of, or in conjunction with, copper tubing upon prior approval, provided:

Tubing is not exposed to ultraviolet light or continuous ambient temperatures in excess of 120 degrees Fat any point along run.

Tubing is free from danger of mechanical damage and readily accessible for replacement with a minimum of tools and without need to remove plaster, furring, equipment, or similar permanent construction.

Tubing is enclosed within conduit or control panel cabinets, or is concealed behind control panels.

Provide color coded or number coded plastic tubing, installed inside or behind control panels. Neatly tie and support tubing. Neatly fasten flexible connections bridging the cabinet and cabinet door along the hinge

side and protect against abrasion.

Run plastic tubing, in mechanical rooms or in spaces where copper tubing is exposed, within adequately supported metal raceways or in metallic or plastic electric conduit.

Use multiple-tube plastic harness or sheathing in place of single plastic tubes where a number of plastic tubes run to the same point, unless such use is otherwise prohibited.

Use fittings for plastic tubing in accordance with the manufacturer's instructions.

Embedding multiple-tube plastic harness in concrete or running it in soil below concrete without additional protection is allowed provided it is jointless, contains 30 percent spares, and prior approval has been obtained.

Provide terminal single lines made of hard-drawn copper tubing, except that where the run is less than 12 inches, use plastic tubing.

3.3 MECHANICAL REFRIGERATION AIR DRYER INSTALLATION

Wall mount through rubber-in-shear mounts. Connect dryer to air compressor outlet with pressure regulator installed downstream of dryer.

3.4 VIBRATION ISOLATION

To prevent vibration, isolate controllers by location or by mounting devices supplied by the equipment manufacturer.

Install tubing and conduit to prevent the transmission of equipment vibration. Mount single tube runs in aircraft-type clamps containing an elastomer insert, preventing contact with ducting or air handling unit housing, casing, or enclosure. Provide multiple runs that conform to the same isolation requirements, but submit mounting details for approval. Refer to Section 23 05 48.00 40 VIBRATION AND SEISMIC CONTROLS FOR HVAC PIPING AND EQUIPMENT for vibration isolation considerations.

3.5 FIELD QUALITY CONTROL

Provide equipment to check the calibration of instruments. Recalibrate or replace instruments not in calibration.

Perform tests in accordance with referenced standards in this section.

Test multizone unit dampers for temperature pickup due to leakage when hot deck is closed and cold deck is open. Provide 2 degrees F maximum temperature rise when the temperature difference between the hot and cold decks is 20 degrees F, unless otherwise approved.

After the inspection has been completed, check systems for continuity.

After completion of control and instrument piping, test and adjust control equipment in terms of design, function, systems balance, and performance, and otherwise make ready for air handling systems acceptance tests. Provide data showing set points and final adjustments of controls.

After air handling system acceptance and after the systems have operated in normal service for 2 weeks, check the adjustment on instruments and

devices. Correct items found to be out of order. When air handling systems are in specified operating condition and when all other pertinent specifications requirements have been met, automatic temperature-control systems are acceptable.

Test pneumatic systems in accordance with ISA 7.0.01. Provide system pressure that does not exceed 30 psig.

Submit test reports to the Contracting Officer.

3.6 OPERATOR TRAINING

Provide written operating instructions and not less than 8 hours of operator training.

Provide classroom and field instructions in operation and maintenance of systems equipment where required by the technical provisions. Direct these services using the manufacturer's factory trained personnel or qualified representative. Give the Contracting Officer seven calendar days written notice of scheduled instructional services. Make instructional materials belonging to the manufacturer or vendor available to the Contracting Officer.

3.7 SPECIAL TOOLS

Provide special tools as required for the operation and adjustment of controllers, instruments, or other control system devices.

3.8 OPERATION AND MAINTENANCE

Provide Operation and Maintenance Manuals that are consistent with manufacturer's standard brochures, schematics, printed instructions, general operating procedures and safety precautions.

-- End of Section --

PART 6 – APPENDIX

General

- Base Map
- Equipment Asset Lists
- Energy usage data

1

a. Phase 1 Surveys_Q's_Data Sheet
b. As-built or record drawings
c. TAB Reports (pending)
d. FPTs

108

a. Phase 1 Surveys_Q's_Data Sheet
b. As-built or record drawings
c. TAB Reports (pending)
d. FPTs (pending)

112

a. Phase 1 Surveys_Q's_Data Sheet
b. As-built or record drawings
c. TAB Reports (pending)
d. FPTs

117

a. Phase 1 Surveys_Q's_Data Sheet
b. As-built or record drawings
c. TAB Reports (pending)
d. FPTs (pending)

1126

a. Phase 1 Surveys_Q's_Data Sheet
b. As-built or record drawings
c. TAB Reports (pending)
d. FPTs (pending)

1265

a. Phase 1 Surveys_Q's_Data Sheet
b. As-built or record drawings
c. TAB Reports (pending)
d. FPTs (pending)

1602

a. Phase 1 Surveys_Q's_Data Sheet
b. As-built or record drawings
c. TAB Reports (pending)
d. FPTs (pending)

1618

a. Phase 1 Surveys_Q's_Data Sheet
b. As-built or record drawings
c. TAB Reports (pending)
d. FPTs

3016

a. Phase 1 Surveys_Q's_Data Sheet
b. As-built or record drawings
c. TAB Reports (pending)
d. FPTs

3126

a. Phase 1 Surveys_Q's_Data Sheet
b. As-built or record drawings
c. TAB Reports (pending)
d. FPTs (pending)

3144

a. Phase 1 Surveys_Q's_Data Sheet
b. As-built or record drawings
c. TAB Reports (pending)
d. FPTs

3147

a. Phase 1 Surveys_Q's_Data Sheet
b. As-built or record drawings
c. TAB Reports (pending)
d. FPTs

3364

a. Phase 1 Surveys_Q's_Data Sheet
b. As-built or record drawings
c. TAB Reports
d. FPTs

3408

a. Phase 1 Surveys_Q's_Data Sheet
b. As-built or record drawings
c. TAB Reports (pending)
d. FPTs

3443

a. Phase 1 Surveys_Q's_Data Sheet
b. As-built or record drawings (pending)
c. TAB Reports (pending)
d. FPTs

3504

a. Phase 1 Surveys_Q's_Data Sheet
b. As-built or record drawings
c. TAB Reports (pending)
d. FPTs (pending)

3525

a. Phase 1 Surveys_Q's_Data Sheet
b. As-built or record drawings
c. TAB Reports
d. FPTs

3560

a. Phase 1 Surveys_Q's_Data Sheet
b. As-built or record drawings
c. TAB Reports
d. FPTs

3603

a. Phase 1 Surveys_Q's_Data Sheet
b. As-built or record drawings
c. TAB Reports (pending)
d. FPTs (pending)

3604

a. Phase 1 Surveys_Q's_Data Sheet
b. As-built or record drawings
c. TAB Reports (pending)
d. FPTs (pending)

3607

a. Phase 1 Surveys_Q's_Data Sheet
b. As-built or record drawings
c. TAB Reports
d. FPTs (pending)

3620

a. Phase 1 Surveys_Q's_Data Sheet
b. As-built or record drawings
c. TAB Reports
d. FPTs

3801

a. Phase 1 Surveys_Q's_Data Sheet
b. As-built or record drawings (pending)
c. TAB Reports (pending)
d. FPTs (pending)

3808

a. Phase 1 Surveys_Q's_Data Sheet
b. As-built or record drawings
c. TAB Reports (pending)
d. FPTs

3814

a. Phase 1 Surveys_Q's_Data Sheet
b. As-built or record drawings (pending)
c. TAB Reports (pending)
d. FPTs (pending)

3841

a. Phase 1 Surveys_Q's_Data Sheet
b. As-built or record drawings
c. TAB Reports (pending)
d. FPTs

3842

a. Phase 1 Surveys_Q's_Data Sheet
b. As-built or record drawings (pending)
c. TAB Reports (pending)
d. FPTs

3853

a. Phase 1 Surveys_Q's_Data Sheet
b. As-built or record drawings
c. TAB Reports (pending)
d. FPTs

3854

a. Phase 1 Surveys_Q's_Data Sheet
b. As-built or record drawings
c. TAB Reports (pending)
d. FPTs

3855

a. Phase 1 Surveys_Q's_Data Sheet
b. As-built or record drawings
c. TAB Reports (pending)
d. FPTs

3856

a. Phase 1 Surveys_Q's_Data Sheet
b. As-built or record drawings
c. TAB Reports (pending)
d. FPTs (pending)

3857

a. Phase 1 Surveys_Q's_Data Sheet
b. As-built or record drawings
c. TAB Reports (pending)
d. FPTs

3873

a. Phase 1 Surveys_Q's_Data Sheet
b. As-built or record drawings
c. TAB Reports (pending)
d. FPTs

3889

a. Phase 1 Surveys_Q's_Data Sheet
b. As-built or record drawings
c. TAB Reports (pending)
d. FPTs (pending)

CB125

a. Phase 1 Surveys_Q's_Data Sheet
b. As-built or record drawings
c. TAB Reports (pending)
d. FPTs (pending)

CB310

a. Phase 1 Surveys_Q's_Data Sheet
b. As-built or record drawings
c. TAB Reports (pending)
d. FPTs

NAB750

a. Phase 1 Surveys_Q's_Data Sheet
b. As-built or record drawings
c. TAB Reports
d. FPTs

T111

a. Phase 1 Surveys_Q's_Data Sheet
b. As-built or record drawings
c. TAB Reports
d. FPTs

This Page Intentionally Left Blank