Solicitation No.
N40192-15-R-2900

PAINTING
INDEFINITE DELIVERY/INDEFINITE QUANTITY (IDIQ)

VARIOUS LOCATIONS, GUAM

SERVICE-DISABLED VETERAN-OWNED SMALL BUSINESS (SDVOSB) SET-ASIDE

Table of Contents

Part I Proposal Forms and Documents

Standard Form 1442	Solicitation, Offer, and Award
Section 00010	Solicitation Contract Form
Section 00100	Instructions to Offerors
Section 00210	Evaluation Factors for Award
Section 00600	Representations and Certifications
Section 00700	Contract Clauses
Section 00800	Labor Requirements
Section 00801	Contract Type/Performance; Special Contract Requirements
Section 00803	Task Order Issuance Procedures
Exhibit 1	Offeror Experience Project Data Sheet
Exhibit 2	Past Performance Questionnaire
Attachment 1	Request for Information Form
Attachment 2	Notice of Prevailing Wage Rates
Exhibit A	Price Schedule: Base Period – ELINS A001 through A020
Exhibit B	Price Schedule: First Option Period – ELINS B001 through B020
Exhibit C	Price Schedule: Second Option Period – ELINS C001 through C020
Exhibit D	Price Schedule: Third Option Period – ELINS D001 through D020
Exhibit E	Price Schedule: Fourth Option Period – ELINS E001 through E020

Part II General Requirements

Section 01 11 00	Summary of Work
Section 01 14 00	Work Restrictions
Section 01 20 00.00 20	Price and Payment Procedures
Section 01 30 00	Administrative Requirements
Section 01 32 01.00 10	Project Schedule
Section 01 32 16.00 20	Construction Progress Documentation
Section 01 32 17.00 20	Network Analysis Schedules (NAS)
Section 01 33 00	Submittal Procedures
Section 01 35 13	Special Project Procedures
Section 01 35 26	Governmental Safety Requirements
Section 01 35 40.00 20	Environmental Management
Section 01 42 00	Sources for Reference Publications
Section 01 45 00.10 20	Quality Control for Minor Construction
Section 01 50 00	Temporary Construction Facilities and Controls
Section 01 57 19.00 20	Temporary Environmental Controls
Section 01 58 00	Project Identification
Section 01 62 35	Recycled Recovered Materials
Section 01 74 19	Construction and Demolition Waste Management
Section 01 78 00	Closeout Submittals

Part III Project Program

Not Used In This Solicitation

Part IV Performance Technical Specifications

Not Used In This Solicitation

Part V Prescriptive Specifications

Section 02 83 19.00 10	Lead Based Paint Hazard Abatement, Target Housing & Child Occupied Facilities
Section 03 01 30.71	Concrete Rehabilitation
Section 07 60 00	Flashing and Sheet Metal
Section 07 92 00	Joint Sealants
Section 09 90 00	Paints and Coatings
Section 32 17 24.00 10	Pavement Markings

Part VI Attachments

6-1 DD 1155, Order for Supplies and Services
6-2 Standard Form 30, Amendment of Solicitation / Modification of Contract
6-3 QC Manager Duties, Authorities, and Sample Letter (5 Pages)
6-4 Contents of QC Plan (2 Pages)
6-5 Contractor Quality Control Report (2 Pages)
6-6 Sample QC Approval Checklist (2 Pages)
6-7 Contractor Production Report (3 Pages)
6-8 Preparatory Phase Checklist (3 Pages)
6-9 Initial Phase Checklist (2 Pages)
6-10 Testing Plan and Log (2 Pages)
6-11 Rework Items List (2 Pages)
6-12 Construction Contract Non-Compliance Notice (2 Pages)
6-13 Contractor Significant Incident Report (CSIR) (10 Pages)
6-14 Contractor Site Safety Assessment (3 Pages)
6-15 BOSC Scheduled Utility Outage Procedure (1 Page)
6-16 Requesting and Paying for BOSC Utility Services (4 Pages)
6-17 DD 1354, Transfer and Acceptance of Military Real Property (2 Pages)

Solicitation No.
N40192-15-R-2900

PAINTING
INDEFINITE DELIVERY/INDEFINITE QUANTITY (IDIQ)

VARIOUS LOCATIONS, GUAM

PART I
PROPOSAL FORMS AND DOCUMENTS

SOLICITATION, OFFER, AND AWARD (Construction, Alteration, or Repair)	1. SOLICITATION NO. N40192-15-R-2900	2. TYPE OF SOLICITATION [ ] SEALED BID (IFB) [X] NEGOTIATED (RFP)	3. DATE ISSUED 18-Dec-2014	PAGE OF PAGES 1 OF 71

IMPORTANT - The "offer" section on the reverse must be fully completed by offeror.

4. CONTRACT NO.	5. REQUISITION/PURCHASE REQUEST NO.	6. PROJECT NO.

7. ISSUED BY CODE N40192	8. ADDRESS OFFER TO (If Other Than Item 7) CODE
COMMANDING OFFICER - NAVFAC MARIANAS IPT MILCON PSC 455, BOX 195 FPO AP 96540-2937 TEL: FAX:	**See Item 7** TEL: FAX:

9. FOR INFORMATION CALL:	A. NAME	B. TELEPHONE NO. (Include area code) (NO COLLECT CALLS)
	JANEEN M. BAIS	671-339-2572

SOLICITATION

NOTE: In sealed bid solicitations "offer" and "offeror" mean "bid" and "bidder".

10. THE GOVERNMENT REQUIRES PERFORMANCE OF THE WORK DESCRIBED IN THESE DOCUMENTS (Title, identifying no., date):

REQUEST FOR PROPOSAL N40192-15-R-2900, PAINTING INDEFINITE DELIVERY / INDEFINITE QUANTITY (IDIQ), VARIOUS LOCATIONS, GUAM

The work to be acquired under this contract is for all labor, safety controls, transportation, materials, equipment and supervision necessary to perform surface preparation on previously painted and unpainted buildings, application of new paint, taping and spackling work, replacement of caulking and puttying, repair of flashings/sheet-metal, repair of concrete cracks and spalls, cutting/trimming of trees and shrubs (obstructing performance of work), painting of pavement markings, and incidental related work at various Federal Government installations and buildings on Guam under the cognizance on the Naval Facilities Engineering Command Marianas.

PROPOSAL DOCUMENTS:
- Solicitation, Offer, and Award (SF1442)
- Instructions to Offerors
- Representations and Certifications

CONTRACT DOCUMENTS:
- Solicitation, Offer, and Award (SF1442)
- Contract Clauses
- NAVFAC Specification 41-15-2900

11. The Contractor shall begin performance within _____ calendar days and complete it within _____ calendar days after receiving [X] award, [ ] notice to proceed. This performance period is [X] mandatory, [ ] negotiable. (See Per Task Order .)

12 A. THE CONTRACTOR MUST FURNISH ANY REQUIRED PERFORMANCE AND PAYMENT BONDS? (If "YES," indicate within how many calendar days after award in Item 12B.) [X] YES [ ] NO	12B. CALENDAR DAYS 10

13. ADDITIONAL SOLICITATION REQUIREMENTS:

A. Sealed offers in original and 2 copies to perform the work required are due at the place specified in Item 8 by 04:30 PM (hour) local time 21 Jan 2015 (date). If this is a sealed bid solicitation, offers must be publicly opened at that time. Sealed envelopes containing offers shall be marked to show the offeror's name and address, the solicitation number, and the date and time offers are due.

B. An offer guarantee [ ] is, [X] is not required.

C. All offers are subject to the (1) work requirements, and (2) other provisions and clauses incorporated in the solicitation in full text or by reference.

D. Offers providing less than 120 calendar days for Government acceptance after the date offers are due will not be considered and will be rejected.

SOLICITATION, OFFER, AND AWARD (Continued)

(Construction, Alteration, or Repair)

OFFER ***(Must be fully completed by offeror)***

14. NAME AND ADDRESS OF OFFEROR *(Include ZIP Code)*		15. TELEPHONE NO. *(Include area code)*
		16. REMITTANCE ADDRESS *(Include only if different than Item 14)* **See Item 14**
CODE	FACILITY CODE	

17. The offeror agrees to perform the work required at the prices specified below in strict accordance with the terms of this solicitation, if this offer is accepted by the Government in writing within _____ calendar days after the date offers are due. *(Insert any number equal to or greater than the minimum requirements stated in Item 13D. Failure to insert any number means the offeror accepts the minimum in Item 13D.)*

AMOUNTS	SEE SCHEDULE OF PRICES

18. The offeror agrees to furnish any required performance and payment bonds.

19. ACKNOWLEDGMENT OF AMENDMENTS

(The offeror acknowledges receipt of amendments to the solicitation -- give number and date of each)

AMENDMENT NO.										
DATE										

20A. NAME AND TITLE OF PERSON AUTHORIZED TO SIGN OFFER *(Type or print)*	20B. SIGNATURE	20C. OFFER DATE

AWARD ***(To be completed by Government)***

21. ITEMS ACCEPTED:

22. AMOUNT	23. ACCOUNTING AND APPROPRIATION DATA

24. SUBMIT INVOICES TO ADDRESS SHOWN IN *(4 copies unless otherwise specified)*	**ITEM**	25. OTHER THAN FULL AND OPEN COMPETITION PURSUANT TO ☐ 10 U.S.C. 2304(c) ☐ 41 U.S.C. 253(c)
26. ADMINISTERED BY CODE		27. PAYMENT WILL BE MADE BY: CODE

CONTRACTING OFFICER WILL COMPLETE ITEM 28 OR 29 AS APPLICABLE

☐ 28. NEGOTIATED AGREEMENT *(Contractor is required to sign this document and return _ _ copies to issuing office.)* Contractor agrees to furnish and deliver all items or perform all work, requisitions identified on this form and any continuation sheets for the consideration stated in this contract. The rights and obligations of the parties to this contract shall be governed by (a) this contract award, (b) the solicitation, and (c) the clauses, representations, certifications, and specifications or incorporated by reference in or attached to this contract.		☐ 29. AWARD *(Contractor is not required to sign this document.)* Your offer on this solicitation, is hereby accepted as to the items listed. This award consummates the contract, which consists of (a) the Government solicitation and your offer, and (b) this contract award. No further contractual document is necessary.
30A. NAME AND TITLE OF CONTRACTOR OR PERSON AUTHORIZED TO SIGN *(Type or print)*		31A. NAME OF CONTRACTING OFFICER *(Type or print)* TEL: EMAIL:
30B. SIGNATURE	30C. DATE	31B. UNITED STATES OF AMERICA BY 31C. AWARD DATE

Section 00010 - Solicitation Contract Form

ITEM NO	SUPPLIES/SERVICES	MAX QUANTITY	UNIT	UNIT PRICE	MAX AMOUNT
0001		6,000,000	Each		
	Base Period IDIQ FFP Painting Indefinite Delivery/Indefinite Quantity (IDIQ) Contract. Estimated amount of IQ work for a period of 12 months. A task order for the minimum guarantee will be issued concurrently with the award of the basic contract. FOB: Destination				
				MAX NET AMT	

ITEM NO	SUPPLIES/SERVICES	MAX QUANTITY	UNIT	UNIT PRICE	MAX AMOUNT
0002 OPTION		6,000,000	Each		
	First Option Period IDIQ FFP Painting Indefinite Delivery/Indefinite Quantity (IDIQ) Contract. Estimated amount of IQ work for a period of 12 months. FOB: Destination				
				MAX NET AMT	

ITEM NO	SUPPLIES/SERVICES	MAX QUANTITY	UNIT	UNIT PRICE	MAX AMOUNT
0003 OPTION	Second Option Period IDIQ FFP Painting Indefinite Delivery/Indefinite Quantity (IDIQ) Contract. Estimated amount of IQ work for a period of 12 months. FOB: Destination	6,000,000	Each		
				MAX NET AMT	

ITEM NO	SUPPLIES/SERVICES	MAX QUANTITY	UNIT	UNIT PRICE	MAX AMOUNT
0004 OPTION	Third Option Period IDIQ FFP Painting Indefinite Delivery/Indefinite Quantity (IDIQ) Contract. Estimated amount of IQ work for a period of 12 months. FOB: Destination	6,000,000	Each		
				MAX NET AMT	

ITEM NO	SUPPLIES/SERVICES	MAX QUANTITY	UNIT	UNIT PRICE	MAX AMOUNT
0005 OPTION	Fourth Option Period IDIQ FFP Painting Indefinite Delivery/Indefinite Quantity (IDIQ) Contract. Estimated amount of IQ work for a period of 12 months. FOB: Destination	6,000,000	Each		
				MAX NET AMT	

ITEM NO	SUPPLIES/SERVICES	MAX QUANTITY	UNIT	UNIT PRICE	MAX AMOUNT
9000	Exhibit A - Base Period Price Schedule FFP Exhibit Line Items A001 – A020 FOB: Destination	UNDEFINED			
				MAX NET AMT	

See Exhibit A

ITEM NO	SUPPLIES/SERVICES	MAX QUANTITY	UNIT	UNIT PRICE	MAX AMOUNT
9001	Exhibit B - First Option Price Schedule FFP Exhibit Line Items B001 – B020 FOB: Destination	UNDEFINED			
				MAX NET AMT	

See Exhibit B

ITEM NO	SUPPLIES/SERVICES	MAX QUANTITY	UNIT	UNIT PRICE	MAX AMOUNT
9002	Exhibit C - Second Option Price Schedule FFP Exhibit Line Items C001 – C020 FOB: Destination	UNDEFINED			
				MAX NET AMT	

See Exhibit C

ITEM NO	SUPPLIES/SERVICES	MAX QUANTITY	UNIT	UNIT PRICE	MAX AMOUNT
9003		UNDEFINED			
	Exhibit D - Third Option Price Schedule FFP Exhibit Line Items D001 – D020 FOB: Destination				
				MAX NET AMT	

See Exhibit D

ITEM NO	SUPPLIES/SERVICES	MAX QUANTITY	UNIT	UNIT PRICE	MAX AMOUNT
9004		UNDEFINED			
	Exhibit E - Fourth Option Price Schedule FFP Exhibit Line Items E001 – E020 FOB: Destination				
				MAX NET AMT	

See Exhibit E

NOTE FOR ELINS

A. Offerors shall enter amounts for Exhibit Line Item Numbers (ELINs) as indicated in the price schedules in Exhibits A thru E.

B. In the event there is a difference between a unit price and the extended total amount, the unit price will be held to be the intended offer and the total of the ELINs will be recomputed accordingly. If the offeror provides a total amount for an ELIN but fails to enter the unit price, the total amount divided by the ELIN quantity will be held to be in the intended unit price.

C. ELINs are included in Exhibits A through E. Pricing shall be prepared for all five (5) periods, base period through the fourth option period.

BLOCK 10 CONTINUATION PAGE

READ THE FOLLOWING IN CONJUNCTION WITH THE ACQUISITION REQUIREMENTS.

This procurement is restricted to Service-Disabled Veteran-Owned Small Business (SDVOSB) concerns.
NAICS: 238320 Size Standard: $15 Million

Estimated dollar value for this contract is $6 Million for the base period, $6 Million for the first option period, $6 Million for the second option period, $6 Million for the third option period, and $6 Million for the fourth option period.

Maximum dollar value, including the base period and all options, is $30 Million.

Task Order Range is $2,500 to $150,000.

Minimum guarantee is $10,000 for the base period only

Inquiries regarding the Request for Proposal (RFP) shall be submitted electronically using the Request for Information (RFI) form provided as Exhibit 1 in this solicitation. The Point of Contact (POC) for inquiries is Janeen M. Bais at (671) 339-2572, by email at Janeen.Bais@fe.navy.mil, or by facsimile at (671) 339-4254. The Government does not intend to respond to inquiries submitted less than 10 days before the proposal receipt date.

PROPOSALS MUST SET FORTH FULL, ACCURATE, AND COMPLETE INFORMATION AS REQUIRED BY THIS REQUEST FOR PROPOSAL (INCLUDING ATTACHMENTS). THE PENALTY FOR MAKING FALSE STATEMENTS IN PROPOSALS IS PRESCRIBED IN 18 U.S.C. 1001.

THE GOVERNMENT INTENDS TO EVALUATE PROPOSALS AND AWARD WITHOUT DISCUSSIONS. HOWEVER, THE GOVERNMENT RESERVES THE RIGHT TO CONDUCT DISCUSSIONS IF IT IS LATER DETERMINED BY THE CONTRACTING OFFICER TO BE NECESSARY. THEREFORE, EACH INITIAL OFFER SHOULD CONTAIN THE BEST TERMS FROM A TECHNICAL, COST, AND PRICE STANDPOINT.

INSPECTION AND ACCEPTANCE TERMS

Supplies/services will be inspected/accepted at:

CLIN	INSPECT AT	INSPECT BY	ACCEPT AT	ACCEPT BY
0001	N/A	N/A	N/A	Government
0002	N/A	N/A	N/A	Government
0003	N/A	N/A	N/A	Government
0004	N/A	N/A	N/A	Government
0005	N/A	N/A	N/A	Government
9000	N/A	N/A	N/A	Government
9001	N/A	N/A	N/A	Government
9002	N/A	N/A	N/A	Government
9003	N/A	N/A	N/A	Government
9004	N/A	N/A	N/A	Government

DELIVERY INFORMATION

CLIN	DELIVERY DATE	QUANTITY	SHIP TO ADDRESS	UIC
0001	POP 10-MAR-2015 TO 09-MAR-2016	N/A	COMMANDING OFFICER - NAVFAC MARIANAS DORIS R. CASTRO PSC 455, BOX 195 FPO AP GU 96540-2937 671-339-8465 FOB: Destination	N40192
0002	POP 10-MAR-2016 TO 09-MAR-2017	N/A	(SAME AS PREVIOUS LOCATION) FOB: Destination	N40192
0003	POP 10-MAR-2017 TO 09-MAR-2018	N/A	(SAME AS PREVIOUS LOCATION) FOB: Destination	N40192
0004	POP 10-MAR-2018 TO 09-MAR-2019	N/A	(SAME AS PREVIOUS LOCATION) FOB: Destination	N40192
0005	POP 10-MAR-2019 TO 09-MAR-2020	N/A	(SAME AS PREVIOUS LOCATION) FOB: Destination	N40192
9000	N/A	N/A	N/A	N/A
9001	N/A	N/A	N/A	N/A
9002	N/A	N/A	N/A	N/A
9003	N/A	N/A	N/A	N/A
9004	N/A	N/A	N/A	N/A

TABLE OF CONTENTS

SECTION **SUBJECT**

SF 1442 **SOLICITATION, OFFER, AND AWARD**

SECTION 00100 **INSTRUCTIONS TO OFFERORS**

1. INQUIRIES
2. PROPOSAL SUBMITTAL REQUIREMENTS
3. JOINT VENTURE, LIMITED LIABILITY COMPANIES AND LIMITED PARTNERSHIP
4. SYSTEM FOR AWARD MANAGEMENT REGISTRATION
5. FEDERAL CONTRACTOR PROGRAM
6. INCURRED EXPENSES
7. PRE-AWARD SURVEY/RESPONSIBILITY DETERMINATION
8. TERRITORY OF GUAM NOTICE CONCERNING TAXES, LICENSES, WITHHOLDINGS

SOLICITATION PROVISIONS

SECTION 00210 **EVALUATION FACTORS FOR AWARD**

PART I GENERAL
- 1.1 SOURCE SELECTION
- 1.2 INTENT TO AWARD WITHOUT DISCUSSIONS
- 1.3 BASIS OF AWARD
- 1.4 ENFORCEABILITY OF PROPOSAL

PART II EVALUATION FACTORS
- 2.1 EVALUATION CRITERIA
- 2.2 EVALUATION FACTORS AND PROPOSAL SUBMISSION REQUIREMENTS
- 2.3 FINAL SELECTION

SECTION 00600 **REPRESENTATIONS AND CERTIFICATIONS**

SECTION 00700 **CONTRACT CLAUSES**

SECTION 00800 **SPECIAL CONTRACT REQUIREMENTS**

EXHIBITS

A. OFFEROR EXPERIENCE PROJECT DATA SHEET
B. SAMPLE PROJECT TIMELINE
C. PAST PERFORMANCE QUESTIONNAIRE

ATTACHMENTS

1. REQUEST FOR INFORMATION FORM (RFI)
2. NOTICE OF PREVAILING WAGE RATES

PRICE SCHEDULE EXHIBITS

A. Base Period – ELINS A001 thru A020
B. First Option Period – ELINS B001 thru B020
C. Second Option Period – ELINS C001 thru C020
D. Third Option Period – ELINS D001 thru D020
E. Fourth Option Period – ELINS E001 thru E020

Section 00100 - Bidding Schedule/Instructions to Bidders

INSTRUCTIONS TO OFFERORS

1. INQUIRIES

Inquiries regarding the Request for Proposal (RFP) shall be submitted electronically using the Request for Information (RFI) form provided as Attachment (1). The Point of Contact (POC) for inquiries is Janeen M. Bais at (671) 339-2572, by email at Janeen.Bais@fe.navy.mil, or by facsimile at (671) 339-4254. **The Government does not intend to respond to inquiries submitted less than 10 days before the proposal receipt date.**

2. PROPOSAL SUBMITTAL REQUIREMENTS

2.1 PROPOSAL FORMAT

Proposals submitted in response to this solicitation shall be formatted as follows and furnished in the number of copies stated herein. A cover letter shall accompany the proposal.

The cover letter shall include —

a. The solicitation number;
b. The name, address, telephone and facsimile numbers, and e-mail addresses of the Offeror;
c. The **DUNS Number, CAGE Code, and Tax Identification Number (TIN)** of the Offeror;
d. A statement specifying the extent of agreement with all terms, conditions, and provisions included in the solicitation and agreement to furnish any or all items upon which prices are offered at the price set opposite each item;
e. Names, titles, phone and facsimile numbers, and email addresses of persons authorized to negotiate on the Offeror's behalf with the Government in connection with this solicitation;
f. Name, title, and signature of person authorized to sign the proposal. Proposals signed by an agent shall be accompanied by evidence of that agent's authority, unless that evidence has been previously furnished to the issuing office.
    i. Individuals. A contract with an individual shall be signed by that individual. A contract with an individual doing business as a firm shall be signed by that individual, and the signature shall be followed by the individual's typed, stamped, or printed name and the words "an individual doing business as *[insert name of firm]*."
    ii. Partnerships. A contract with a partnership shall be signed in the partnership name.
    iii. Corporations. A contract with a corporation shall be signed in the corporate name, followed by the word "by" and the signature and title of the person authorized to sign.
    iv. Joint Ventures. A contract with a joint venture may involve any combination of individuals, partnerships, or corporations. The contract shall be signed by each participant in the joint venture in the manner prescribed in paragraphs (a) through (c) above for each type of participant.
    v. Agents. When an agent is to sign the contract, other than as stated in paragraphs (a) through (d) above, the agent's authorization to bind the principal must be established by evidence satisfactory to the Contracting Officer; and
g. Joint Venture Agreement, Binding Team Agreement, or other contractual agreement (as applicable).

Proposals shall be submitted in three ring binders or bound, with tabs or separators. Page limits, where stipulated, must be adhered to (page refers to one printed side of a piece of paper). Proposals shall be submitted on 8.5" X 11" paper, using standard margins and no less than 10 pitch font, utilizing both sides of the paper. The format for the proposal follows in paragraphs 2.2 and 2.3 of this section.

2.2 PROPOSAL FOR THE SOLICITATION

The format for the proposal is as follows:

COVER LETTER
Joint Venture Agreement, Binding Team Agreement, or other contractual agreement (as applicable).

TECHNICAL PROPOSAL
Tab 1: Factor 1, Experience
Tab 2: Factor 2, Safety
Tab 3: Factor 3, Past Performance

PRICE PROPOSAL
Factor 4, Price (In Sealed Envelope) – The envelope shall contain the following original documents:

i. Standard Form SF1442 (Solicitation, Offer, and Award) with the following completed:
   a. Blocks 14 through 20c
   b. Schedule of Prices in Exhibits A thru E
ii. Representations and Certifications – Offeror is to complete Section 00600 of the solicitation and the System for Award Management (SAM)
iii. Bonding Capacity – Offeror is to provide a letter from bonding agent or surety indicating single and aggregate bonding capacity for task order awards under this contract

Offerors are asked to submit only the information/exhibits required. Do not submit any additional information such as brochures or other pre-printed materials.

Envelope is to be clearly marked in the bottom right corner as follows:

OFFEROR'S NAME
PRICE PROPOSAL SUBMITTED UNDER RFP N40192-15-R-2900
PAINTING IDIQ CONTRACT, VARIOUS LOCATIONS, GUAM
DO NOT OPEN IN MAILROOM

2.3 PROPOSAL SUBMISSION

Proposals in response to this RFP must be submitted in the format and number of copies as follows:

a. One (1) original hard copy of the Technical Proposal
b. Two (2) hard copies of the Technical Proposal
c. One (1) electronic copy of the Technical Proposal in Adobe Acrobat PDF format provided on compact disc (CD)
d. Two (2) original hard copies of the Price Proposal (in sealed envelopes)
e. One (1) electronic copy of Exhibits A thru E of the Price Proposal in Adobe Acrobat PDF format provided on compact disc (CD). The SF1442, Representations and Certifications, Letter from bonding agent or surety, and Joint Venture Agreement (if applicable) are not required in electronic format. Place the CD in the sealed envelope, along with the hard copies of the Price Proposal.

The Offeror is responsible for ensuring that all original paper and electronic copies are identical. Should there be a discrepancy between the paper and electronic versions, the paper copy shall govern.

Proposals must be received by this office **no later than the date and time stated in Block 13 of the SF1442**. Offerors should address all evaluation factors and shall submit the proposal to the following address:

For Hand Delivery or Private Courier:	For U.S. Postal Delivery:
Naval Facilities Engineering Command Marianas Attention: Janeen M. Bais Pedro LG Roberto Drive, Apra Heights Bldg 4175, 2nd Floor, Room A206 Santa Rita, Guam 96915	Naval Facilities Engineering Command Marianas Attention: Janeen M. Bais PSC 455, Box 195 FPO, AP 96540-2937

PROPOSALS MUST BE RECEIVED AND DATE/TIME STAMPED BY THE CONTRACTING OFFICER ON OR BEFORE THE DATE AND TIME SPECIFIED IN THE RFP. LATE SUBMITTALS WILL NOT BE CONSIDERED UNLESS THE REQUIREMENTS IN FAR 52.215-1 INSTRUCTIONS TO OFFERORS – COMPETITIVE ACQUISITION ARE SATISFIED.

Proposal must be clearly marked on the outside of the package with the solicitation number.

3. JOINT VENTURE, LIMITED LIABILITY COMPANIES AND LIMITED PARTNERSHIP

a. Joint Venture Offerors shall provide a copy of the joint venture agreement. The agreement shall include information that identifies the responsibilities for each entity under this contract, demonstrate the relationship between firms, and identify contractual relationships and authorities to bind each entity of the joint venture. The Joint Venture also needs to complete the online representations and certifications for each joint venture member as well as for the joint venture itself.

b. Joint Ventures and Limited Liability Companies and Limited Partnerships shall submit the following additional documentation regarding their business entities:

i. A copy of the JV, LLC, or LTD agreement.
ii. A detailed statement outlining the following in terms of percentages where appropriate:
    1. The relationship of the team/partners/parties in terms of business ownership, capital contribution, profit distribution or loss sharing.
    2. The management approach in terms of who will conduct, direct, supervise, and control.
    3. The structure and decision-making responsibilities of the partners/parties in terms of who will control the manner and method of performance of work.
    4. Identify (by name and title) the personnel having the authority to legally bind the partners/parties (including authority to execute the contract documents and bonds).
iii. A list of partners/parties, to include company name, DUNS and CAGE Numbers, Address, Point of Contact, e-mail address, phone number and facsimile number.

4. SYSTEM FOR AWARD MANAGEMENT REGISTRATION

The implementation of the System for Award Management (SAM), among other changes, brings together the capabilities of the former Central Contractor Registration (CCR) and Online Representations and Certifications Application (ORCA).

Firms offering a response to this notice should ensure that they are registered in the System for Award Management (SAM) database (https://www.sam.gov), and complete the provisions associated with the annual representations and certifications identified in the Federal Acquisition Regulation (FAR) subpart 4.1202 and Defense FAR Supplement (DFARS) subpart 204.1202. Firms shall also ensure to obtain a registered DUNS number prior to award.

NOTE: CONTRACTORS MUST COMPLETE BOTH THE FAR AND DFARS REPRESENTATIONS AND CERTIFICATIONS ON THE SAM WEBSITE. CONTRACTORS ARE PROVIDED ACCESS TO THE DFARS PROVISIONS ONLY WHEN THEY ANSWER AFFIRMATIVELY THAT THEY WOULD LIKE TO DO

BUSINESS WITH THE DEPARTMENT OF DEFENSE. Contractors are advised that both FAR and DFARS provisions must be listed on their SAM record in order to participate in this solicitation.

Contractors are also advised to review the NAICS codes listed in their SAM record to ensure that the NAICS code for this procurement (NAICS 238320 – Painting and Wall Covering Contractors) is included.

5. FEDERAL CONTRACTOR PROGRAM

In accordance with Federal Acquisition Regulation (FAR) 22.1303, any contractor or subcontractor with a contract of $100,000 or more with the Federal Government must take affirmative action to employ, and advance in employment, qualified special disabled veterans, veterans of the Vietnam era, and other eligible veterans without discrimination based on their disability or veteran's status.

Companies must file an annual VETS-100 report, which shows the number of targeted veterans in their workforce by job category, hiring location, and number of new hires, including targeted veterans hired during the reporting period and the maximum number and minimum number of employees of such contractor during the period covered by the report. Instructions, information and follow-up assistance is provided at VETS-100 Internet site at http://www.dol.gov/vets/vets-100.html or employers may contact the VETS-100 Processing Center at (866) 237-0275 or e-mail at VETS100-customersupport@dol.gov. **A contract cannot be awarded to a contractor that has not submitted a required annual form VETS-100, Federal Contractor Veterans' Employment Report (VETS-100 Report) if subject to the reporting requirements of 38 U.S.C. 4212(d) for that fiscal year**.

6. INCURRED EXPENSES

The Government is not responsible for any costs incurred or associated with preparation and submission of a proposal in response to this solicitation.

7. PRE-AWARD SURVEY/RESPONSIBILITY DETERMINATION

This pre-award survey/responsibility determination is not part of the technical evaluation. FAR subpart 9.104 requires prospective contractors to demonstrate that they have adequate financial resources to perform the contract or the ability to obtain them; capability to comply with the required performance schedule; satisfactory performance record; and be otherwise eligible to receive an award under applicable laws and regulations. This is notice that the Contracting Officer may request Offerors submit the following information for review and determination prior to award:

a. Company financial statements (balance sheets and income statements) for the past three years.
b. Financial resources available to perform the contract. Submit evidence of availability of working/operating capital that will be used for the performance of the contract. If the offeror plans to rely on financial support from other sources, identify the maximum lines of credit that will be available to include documentation to support the amounts. The maximum lines of credit should be based upon the inclusion of this contract effort. For joint ventures discuss the financial responsibilities among companies and provide same information for each partner.
c. Newly-formed entities (e.g. limited liability companies (LLC)), limited partnerships (LTD) and newly created corporate subsidiaries) that are the entity liable on the contract ordinarily have no record or an insufficient record of relevant experience, past performance, and financial capability to support a responsibility determination. In such cases, the offeror may rely on the resources of the LLC member, parent, limited partner, or other entities related to the offeror for responsibility purposes where the offer submits a guaranty from the entity providing the resources.
d. A list of existing commercial and government business commitments to include contract numbers, names of Contracting Officers, telephone numbers, value of contract, completion date and percent complete. If the list of existing commitments is extensive, provide the required information on at least five projects of similar dollar value and a summary of the existing commitments to include number of contracts, total dollar value of all contracts, and total dollar value of work remaining.

8. TERRITORY OF GUAM NOTICE CONCERNING TAXES, LICENSES, AND WITHHOLDINGS

(NOTE: The information in this Notice to Bidders is provided by the Government of Guam, Department of Revenue and Taxation. Any questions concerning applicability or interpretation should be directed to that Agency at 1240 Army Drive, Barrigada, Guam 96913. Business registration with the Government of Guam is not considered in determining contractor responsiveness or responsibility. Bidders attention is directed to FAR Clause 52.236-7 in the solicitation entitled "PERMITS AND RESPONSIBILITIES".)

a. All persons engaging in business in Guam must be licensed to do so by the Government of Guam prior to commencement of business in Guam. Engaging in business includes, but is not limited to, services provided by contractors. Applications for business licenses shall be made to the Department of Revenue and Taxation, License and Registration Branch.

b. All corporations, domestic (created under the laws of Guam) or foreign (not created under the laws of Guam) must register with the Department of Revenue and Taxation, License and Registration Branch.

c. Any person engaging in business in Guam must file monthly Business Privilege Tax returns with the Department of Revenue and Taxation.

d. All corporations with a Guam source of funds must file income tax returns to the Department of Revenue and Taxation on the prescribed forms.

e. All employers must deposit wage withholdings from their employees to the Treasurer of Guam. Guam Depository Receipts, as well as Quarterly Withholding Statements are required to be filed with the Department of Revenue and Taxation in the same manner as similar returns and statements required to be filed with the U.S. Internal Revenue Service.

f. Failure to comply with the above may result in criminal or civil penalties as provided by law.

SOLICITATION PROVISIONS

CLAUSES INCORPORATED BY REFERENCE

52.204-6	Data Universal Numbering System Number	JUL 2013
52.225-25	Prohibition on Contracting with Entities Engaging in Certain Activities or Transactions Relating to Iran-- Representation and Certifications.	DEC 2012
52.236-28	Preparation of Proposals--Construction	OCT 1997
252.203-7005	Representation Relating to Compensation of Former DoD Officials	NOV 2011
252.215-7008	Only One Offer	OCT 2013

CLAUSES INCORPORATED BY FULL TEXT

52.204-7 SYSTEM FOR AWARD MANAGEMENT (JULY 2013)

(a) Definitions. As used in this provision--

Data Universal Numbering System (DUNS) number means the 9-digit number assigned by Dun and Bradstreet, Inc. (D&B) to identify unique business entities.

Data Universal Numbering System +4 (DUNS+4) number means the DUNS number assigned by D&B plus a 4-character suffix that may be assigned by a business concern. (D&B has no affiliation with this 4-character suffix.) This 4-character suffix may be assigned at the discretion of the business concern to establish additional System for Award Management records for identifying alternative Electronic Funds Transfer (EFT) accounts (see the FAR at Subpart 32.11) for the same parent concern.

Registered in the System for Award Management SAM database means that--

(1) The offeror has entered all mandatory information, including the DUNS number or the DUNS+4 number, the Contractor and Government Entity (CAGE) code, as well as data required by the Federal Funding Accountability and Transparency Act of 2006 (see Subpart 4.14) into the SAM database;

(2) The offeror has completed the Core, Assertions, and Representations and Certifications, and Points of Contact sections of the registration in the SAM database;

(3) The Government has validated all mandatory data fields, to include validation of the Taxpayer Identification Number (TIN) with the Internal Revenue Service (IRS). The offeror will be required to provide consent for TIN validation to the Government as a part of the SAM registration process; and

(4) The Government has marked the record ``Active".

(b)(1) By submission of an offer, the offeror acknowledges the requirement that a prospective awardee shall be registered in the SAM database prior to award, during performance, and through final payment of any contract, basic agreement, basic ordering agreement, or blanket purchasing agreement resulting from this solicitation.

(2) The offeror shall enter, in the block with its name and address on the cover page of its offer, the annotation “DUNS” or “DUNS +4” followed by the DUNS or DUNS +4 number that identifies the offeror's name and address exactly as stated in the offer. The DUNS number will be used by the Contracting Officer to verify that the offeror is registered in the SAM database.

(c) If the offeror does not have a DUNS number, it should contact Dun and Bradstreet directly to obtain one.

(1) An offeror may obtain a DUNS number--

(i) Via the Internet at http://fedgov.dnb.com/webform or if the offeror does not have internet access, it may call Dun and Bradstreet at 1-866-705-5711 if located within the United States; or

(ii) If located outside the United States, by contacting the local Dun and Bradstreet office. The offeror should indicate that it is an offeror for a U.S. Government contract when contacting the local Dun and Bradstreet office.

(2) The offeror should be prepared to provide the following information:

(i) Company legal business.

(ii) Tradestyle, doing business, or other name by which your entity is commonly recognized.

(iii) Company Physical Street Address, City, State, and Zip Code.

(iv) Company Mailing Address, City, State and Zip Code (if separate from physical).

(v) Company Telephone Number.

(vi) Date the company was started.

(vii) Number of employees at your location.

(viii) Chief executive officer/key manager.

(ix) Line of business (industry).

(x) Company Headquarters name and address (reporting relationship within your entity).

(d) If the Offeror does not become registered in the SAM database in the time prescribed by the Contracting Officer, the Contracting Officer will proceed to award to the next otherwise successful registered Offeror.

(e) Processing time, which normally takes 48 hours, should be taken into consideration when registering. Offerors who are not registered should consider applying for registration immediately upon receipt of this solicitation.

(f) Offerors may obtain information on registration at https://www.acquisition.gov.

(End of clause)

52.211-2 AVAILABILITY OF SPECIFICATIONS, STANDARDS, AND DATA ITEM DESCRIPTIONS LISTED IN THE ACQUISITION STREAMLINING AND STANDARDIZATION INFORMATION SYSTEM (ASSIST) (APR 2014)

(a) Most unclassified Defense specifications and standards may be downloaded from the following ASSIST websites:

(1) ASSIST (https://assist.dla.mil/online/start/);

(2) Quick Search (http://quicksearch.dla.mil/);

(3) ASSISTdocs.com (http://assistdocs.com).

(b) Documents not available from ASSIST may be ordered from the Department of Defense Single Stock Point (DoDSSP) by--

(1) Using the ASSIST Shopping Wizard (https://assist.dla.mil/wizard/index.cfm);

(2) Phoning the DoDSSP Customer Service Desk (215) 697-2179, Mon-Fri, 0730 to 1600 EST; or

(3) Ordering from DoDSSP, Building 4, Section D, 700 Robbins Avenue, Philadelphia, PA 19111-5094, Telephone (215) 697-2667/2179, Facsimile (215) 697-1462.

(End of provision)

52.211-14 NOTICE OF PRIORITY RATING FOR NATIONAL DEFENSE, EMERGENCY PREPAREDNESS, AND ENERGY PROGRAM USE (APR 2008)

Any contract awarded as a result of this solicitation will be * DX rated order; * DO rated order certified for national defense, emergency preparedness, and energy program use under the Defense Priorities and Allocations System (DPAS) (15 CFR 700), and the Contractor will be required to follow all of the requirements of this regulation.

DX/DO ratings are defined on a per task order basis.

(End of provision)

52.214-34 SUBMISSION OF OFFERS IN THE ENGLISH LANGUAGE (APR 1991)

Offers submitted in response to this solicitation shall be in the English language. Offers received in other than English shall be rejected.

(End of provision)

52.214-35 SUBMISSION OF OFFERS IN U.S. CURRENCY (APR 1991)

Offers submitted in response to this solicitation shall be in terms of U.S. dollars. Offers received in other than U.S. dollars shall be rejected.

(End of provision)

52.215-1 INSTRUCTIONS TO OFFERORS--COMPETITIVE ACQUISITION (JAN 2004)

(a) Definitions. As used in this provision--

“Discussions” are negotiations that occur after establishment of the competitive range that may, at the Contracting Officer's discretion, result in the offeror being allowed to revise its proposal.

“In writing or written” means any worded or numbered expression which can be read, reproduced, and later communicated, and includes electronically transmitted and stored information.

“Proposal modification” is a change made to a proposal before the solicitation's closing date and time, or made in response to an amendment, or made to correct a mistake at any time before award.

“Proposal revision” is a change to a proposal made after the solicitation closing date, at the request of or as allowed by a Contracting Officer as the result of negotiations.

“Time”, if stated as a number of days, is calculated using calendar days, unless otherwise specified, and will include Saturdays, Sundays, and legal holidays. However, if the last day falls on a Saturday, Sunday, or legal holiday, then the period shall include the next working day.

(b) Amendments to solicitations. If this solicitation is amended, all terms and conditions that are not amended remain unchanged. Offerors shall acknowledge receipt of any amendment to this solicitation by the date and time specified in the amendment(s).

(c) Submission, modification, revision, and withdrawal of proposals. (1) Unless other methods (e.g., electronic commerce or facsimile) are permitted in the solicitation, proposals and modifications to proposals shall be submitted in paper media in sealed envelopes or packages (i) addressed to the office specified in the solicitation, and (ii) showing the time and date specified for receipt, the solicitation number, and the name and address of the offeror. Offerors using commercial carriers should ensure that the proposal is marked on the outermost wrapper with the information in paragraphs (c)(1)(i) and (c)(1)(ii) of this provision.

(2) The first page of the proposal must show--

(i) The solicitation number;

(ii) The name, address, and telephone and facsimile numbers of the offeror (and electronic address if available);

(iii) A statement specifying the extent of agreement with all terms, conditions, and provisions included in the solicitation and agreement to furnish any or all items upon which prices are offered at the price set opposite each item;

(iv) Names, titles, and telephone and facsimile numbers (and electronic addresses if available) of persons authorized to negotiate on the offeror's behalf with the Government in connection with this solicitation; and

(v) Name, title, and signature of person authorized to sign the proposal. Proposals signed by an agent shall be accompanied by evidence of that agent's authority, unless that evidence has been previously furnished to the issuing office.

(3) Submission, modification, or revision, of proposals.

(i) Offerors are responsible for submitting proposals, and any modifications, or revisions, so as to reach the Government office designated in the solicitation by the time specified in the solicitation. If no time is specified in the solicitation, the time for receipt is 4:30 p.m., local time, for the designated Government office on the date that proposal or revision is due.

(ii)(A) Any proposal, modification, or revision received at the Government office designated in the solicitation after the exact time specified for receipt of offers is “late” and will not be considered unless it is received before award is made, the Contracting Officer determines that accepting the late offer would not unduly delay the acquisition; and--

(1) If it was transmitted through an electronic commerce method authorized by the solicitation, it was received at the initial point of entry to the Government infrastructure not later than 5:00 p.m. one working day prior to the date specified for receipt of proposals; or

(2) There is acceptable evidence to establish that it was received at the Government installation designated for receipt of offers and was under the Government's control prior to the time set for receipt of offers; or

(3) It is the only proposal received.

(B) However, a late modification of an otherwise successful proposal that makes its terms more favorable to the Government, will be considered at any time it is received and may be accepted.

(iii) Acceptable evidence to establish the time of receipt at the Government installation includes the time/date stamp of that installation on the proposal wrapper, other documentary evidence of receipt maintained by the installation, or oral testimony or statements of Government personnel.

(iv) If an emergency or unanticipated event interrupts normal Government processes so that proposals cannot be received at the office designated for receipt of proposals by the exact time specified in the solicitation, and urgent Government requirements preclude amendment of the solicitation, the time specified for receipt of proposals will be deemed to be extended to the same time of day specified in the solicitation on the first work day on which normal Government processes resume.

(v) Proposals may be withdrawn by written notice received at any time before award. Oral proposals in response to oral solicitations may be withdrawn orally. If the solicitation authorizes facsimile proposals, proposals may be withdrawn via facsimile received at any time before award, subject to the conditions specified in the provision at 52.215-5, Facsimile Proposals. Proposals may be withdrawn in person by an offeror or an authorized representative, if the identity of the person requesting withdrawal is established and the person signs a receipt for the proposal before award.

(4) Unless otherwise specified in the solicitation, the offeror may propose to provide any item or combination of items.

(5) Offerors shall submit proposals in response to this solicitation in English, unless otherwise permitted by the solicitation, and in U.S. dollars, unless the provision at FAR 52.225-17, Evaluation of Foreign Currency Offers, is included in the solicitation.

(6) Offerors may submit modifications to their proposals at any time before the solicitation closing date and time, and may submit modifications in response to an amendment, or to correct a mistake at any time before award.

(7) Offerors may submit revised proposals only if requested or allowed by the Contracting Officer.

(8) Proposals may be withdrawn at any time before award. Withdrawals are effective upon receipt of notice by the Contracting Officer.

(d) Offer expiration date. Proposals in response to this solicitation will be valid for the number of days specified on the solicitation cover sheet (unless a different period is proposed by the offeror).

(e) Restriction on disclosure and use of data. Offerors that include in their proposals data that they do not want disclosed to the public for any purpose, or used by the Government except for evaluation purposes, shall--

(1) Mark the title page with the following legend: This proposal includes data that shall not be disclosed outside the Government and shall not be duplicated, used, or disclosed--in whole or in part--for any purpose other than to evaluate this proposal. If, however, a contract is awarded to this offeror as a result of--or in connection with-- the submission of this data, the Government shall have the right to duplicate, use, or disclose the data to the extent provided in the resulting contract. This restriction does not limit the Government's right to use information contained in this data if it is obtained from another source without restriction. The data subject to this restriction are contained in sheets [insert numbers or other identification of sheets]; and

(2) Mark each sheet of data it wishes to restrict with the following legend: Use or disclosure of data contained on this sheet is subject to the restriction on the title page of this proposal.

(f) Contract award. (1) The Government intends to award a contract or contracts resulting from this solicitation to the responsible offeror(s) whose proposal(s) represents the best value after evaluation in accordance with the factors and subfactors in the solicitation.

(2) The Government may reject any or all proposals if such action is in the Government's interest.

(3) The Government may waive informalities and minor irregularities in proposals received.

(4) The Government intends to evaluate proposals and award a contract without discussions with offerors (except clarifications as described in FAR 15.306(a)). Therefore, the offeror's initial proposal should contain the offeror's best terms from a cost or price and technical standpoint. The Government reserves the right to conduct discussions if the Contracting Officer later determines them to be necessary. If the Contracting Officer determines that the number of proposals that would otherwise be in the competitive range exceeds the number at which an efficient competition can be conducted, the Contracting Officer may limit the number of proposals in the competitive range to the greatest number that will permit an efficient competition among the most highly rated proposals.

(5) The Government reserves the right to make an award on any item for a quantity less than the quantity offered, at the unit cost or prices offered, unless the offeror specifies otherwise in the proposal.

(6) The Government reserves the right to make multiple awards if, after considering the additional administrative costs, it is in the Government's best interest to do so.

(7) Exchanges with offerors after receipt of a proposal do not constitute a rejection or counteroffer by the Government.

(8) The Government may determine that a proposal is unacceptable if the prices proposed are materially unbalanced between line items or subline items. Unbalanced pricing exists when, despite an acceptable total evaluated price, the price of one or more contract line items is significantly overstated or understated as indicated by the application of cost or price analysis techniques. A proposal may be rejected if the Contracting Officer determines that the lack of balance poses an unacceptable risk to the Government.

(9) If a cost realism analysis is performed, cost realism may be considered by the source selection authority in evaluating performance or schedule risk.

(10) A written award or acceptance of proposal mailed or otherwise furnished to the successful offeror within the time specified in the proposal shall result in a binding contract without further action by either party.

(11) If a post-award debriefing is given to requesting offerors, the Government shall disclose the following information, if applicable:

(i) The agency's evaluation of the significant weak or deficient factors in the debriefed offeror's offer.

(ii) The overall evaluated cost or price and technical rating of the successful and the debriefed offeror and past performance information on the debriefed offeror.

(iii) The overall ranking of all offerors, when any ranking was developed by the agency during source selection.

(iv) A summary of the rationale for award.

(v) For acquisitions of commercial items, the make and model of the item to be delivered by the successful offeror.

(vi) Reasonable responses to relevant questions posed by the debriefed offeror as to whether source-selection procedures set forth in the solicitation, applicable regulations, and other applicable authorities were followed by the agency.

(End of provision)

52.216-1 TYPE OF CONTRACT (APR 1984)

The Government contemplates award of a **Firm-Fixed-Price (FFP) Indefinite-Delivery Indefinite-Quantity (IDIQ)** contract resulting from this solicitation.

(End of provision)

52.216-27 SINGLE OR MULTIPLE AWARDS. (OCT 1995)

The Government may elect to award a single delivery order contract or task order contract or to award multiple delivery order contracts or task order contracts for the same or similar supplies or services to two or more sources under this solicitation.

(End of provision)

52.222-23 NOTICE OF REQUIREMENT FOR AFFIRMATIVE ACTION TO ENSURE EQUAL EMPLOYMENT OPPORTUNITY FOR CONSTRUCTION (FEB 1999)

(a) The offeror's attention is called to the Equal Opportunity clause and the Affirmative Action Compliance Requirements for Construction clause of this solicitation.

(b) The goals for minority and female participation, expressed in percentage terms for the Contractor's aggregate workforce in each trade on all construction work in the covered area, are as follows:

Goals for minority participation for each trade	Goals for female participation for each trade
	6.9%

These goals are applicable to all the Contractor's construction work performed in the covered area. If the Contractor performs construction work in a geographical area located outside of the covered area, the Contractor shall apply the goals established for the geographical area where the work is actually performed. Goals are published periodically in the Federal Register in notice form, and these notices may be obtained from any Office of Federal Contract Compliance Programs office.

(c) The Contractor's compliance with Executive Order 11246, as amended, and the regulations in 41 CFR 60-4 shall be based on (1) its implementation of the Equal Opportunity clause, (2) specific affirmative action obligations required by the clause entitled "Affirmative Action Compliance Requirements for Construction," and (3) its efforts to meet the goals. The hours of minority and female employment and training must be substantially uniform throughout the length of the contract, and in each trade. The Contractor shall make a good faith effort to employ minorities and women evenly on each of its projects. The transfer of minority or female employees or trainees from Contractor to Contractor, or from project to project, for the sole purpose of meeting the Contractor's goals shall be a violation of the contract, Executive Order 11246, as amended, and the regulations in 41 CFR 60-4. Compliance with the goals will be measured against the total work hours performed.

(d) The Contractor shall provide written notification to the Deputy Assistant Secretary for Federal Contract Compliance, U.S. Department of Labor, within 10 working days following award of any construction subcontract in excess of $10,000 at any tier for construction work under the contract resulting from this solicitation. The notification shall list the --

(1) Name, address, and telephone number of the subcontractor;

(2) Employer's identification number of the subcontractor;

(3) Estimated dollar amount of the subcontract;

(4) Estimated starting and completion dates of the subcontract; and

(5) Geographical area in which the subcontract is to be performed.

(e) As used in this Notice, and in any contract resulting from this solicitation, the "covered area" is **Guam**.

(End of provision)

52.225-12 NOTICE OF BUY AMERICAN REQUIREMENT-- CONSTRUCTION MATERIALS UNDER TRADE AGREEMENTS (MAY 2014)

(a) Definitions. “Commercially available off-the-shelf (COTS) item,” “construction material,” “designated country construction material,” “domestic construction material,” and “foreign construction material,” as used in this provision, are defined in the clause of this solicitation entitled “Buy American -- Construction Materials Under Trade Agreements” (Federal Acquisition Regulation (FAR) clause 52.225-11).

(b) Requests for determination of inapplicability. An offeror requesting a determination regarding the inapplicability of the Buy American statute should submit the request to the Contracting Officer in time to allow a determination before submission of offers. The offeror shall include the information and applicable supporting data required by paragraphs (c) and (d) of FAR clause 52.225-11 in the request. If an offeror has not requested a determination regarding the inapplicability of the Buy American statute before submitting its offer, or has not received a response to a previous request, the offeror shall include the information and supporting data in the offer.

(c) Evaluation of offers. (1) The Government will evaluate an offer requesting exception to the requirements of the Buy American statute, based on claimed unreasonable cost of domestic construction materials, by adding to the offered price the appropriate percentage of the cost of such foreign construction material, as specified in paragraph (b)(4)(i) of FAR clause 52.225-11.

(2) If evaluation results in a tie between an offeror that requested the substitution of foreign construction material based on unreasonable cost and an offeror that did not request an exception, the Contracting Officer will award to the offeror that did not request an exception based on unreasonable cost.

(d) Alternate offers. (1) When an offer includes foreign construction material, other than designated country construction material, that is not listed by the Government in this solicitation in paragraph (b)(3) of FAR clause 52.225-11, the offeror also may submit an alternate offer based on use of equivalent domestic or designated country construction material.

(2) If an alternate offer is submitted, the offeror shall submit a separate Standard Form 1442 for the alternate offer, and a separate price comparison table prepared in accordance with paragraphs (c) and (d) of FAR clause 52.225-11 for the offer that is based on the use of any foreign construction material for which the Government has not yet determined an exception applies.

(3) If the Government determines that a particular exception requested in accordance with paragraph (c) of FAR clause 52.225-11 does not apply, the Government will evaluate only those offers based on use of the equivalent domestic or designated country construction material, and the offeror shall be required to furnish such domestic or designated country construction material. An offer based on use of the foreign construction material for which an exception was requested-- (i) Will be rejected as nonresponsive if this acquisition is conducted by sealed bidding; or

(ii) May be accepted if revised during negotiations.

(End of provision)

52.233-2 SERVICE OF PROTEST (SEP 2006)

(a) Protests, as defined in section 33.101 of the Federal Acquisition Regulation, that are filed directly with an agency, and copies of any protests that are filed with the Government Accountability Office (GAO), shall be served on the Contracting Officer (addressed as follows) by obtaining written and dated acknowledgment of receipt from **NAVFAC Marianas, PSC 455, Box 195, FPO, AP 96540-2937.**

(b) The copy of any protest shall be received in the office designated above within one day of filing a protest with the GAO.

(End of provision)

52.252-1 SOLICITATION PROVISIONS INCORPORATED BY REFERENCE (FEB 1998)

This solicitation incorporates one or more solicitation provisions by reference, with the same force and effect as if they were given in full text. Upon request, the Contracting Officer will make their full text available. The offeror is cautioned that the listed provisions may include blocks that must be completed by the offeror and submitted with its quotation or offer. In lieu of submitting the full text of those provisions, the offeror may identify the provision by paragraph identifier and provide the appropriate information with its quotation or offer. Also, the full text of a solicitation provision may be accessed electronically at this/these address(es):

http://farsite.hill.af.mil
http://farsite.hill.af.mil/vffara.htm

(End of provision)

52.252-3 ALTERATIONS IN SOLICITATION (APR 1984)

Portions of this solicitation are altered as follows:

None.

252.204-7004 ALTERNATE A, SYSTEM FOR AWARD MANAGEMENT (FEB 2014)

(a) Definitions. As used in this provision--

``System for Award Management (SAM) database'' means the primary Government repository for contractor information required for the conduct of business with the Government.

``Commercial and Government Entity (CAGE) code'' means—

(1) A code assigned by the Defense Logistics Information Service (DLIS) to identify a commercial or Government entity; or

(2) A code assigned by a member of the North Atlantic Treaty Organization that DLIS records and maintains in the CAGE master file. This type of code is known as an ``NCAGE code.''

``Data Universal Numbering System (DUNS) number'' means the 9-digit number assigned by Dun and Bradstreet, Inc. (D&B) to identify unique business entities.

``Data Universal Numbering System +4 (DUNS+4) number'' means the DUNS number assigned by D&B plus a 4-character suffix that may be assigned by a business concern. (D&B has no affiliation with this 4-character suffix.) This 4-character suffix may be assigned at the discretion of the business concern to establish additional SAM records for identifying alternative Electronic Funds Transfer (EFT) accounts (see FAR 32.11) for the same parent concern.

``Registered in the System for Award Management (SAM) database'' means that—

(1) The contractor has entered all mandatory information, including the DUNS number or the DUNS+4 number, and Contractor and Government Entity (CAGE) code into the SAM database;

(2) The contractor has completed the Core Data, Assertions, Representations and Certifications, and Points of Contact sections of the registration in the SAM database;

(3) The Government has validated all mandatory data fields, to include validation of the Taxpayer Identification Number (TIN) with the Internal Revenue Service (IRS). The Contractor will be required to provide consent for TIN validation to the Government as part of the SAM registration process; and

(4) The Government has marked the record ``Active.''

(End of clause)

252.209-7001 DISCLOSURE OF OWNERSHIP OR CONTROL BY THE GOVERNMENT OF A TERRORIST COUNTRY (JAN 2009)

(a) "Definitions."

As used in this provision --

(a) "Government of a terrorist country" includes the state and the government of a terrorist country, as well as any political subdivision, agency, or instrumentality thereof.

(2) "Terrorist country" means a country determined by the Secretary of State, under section 6(j)(1)(A) of the Export Administration Act of 1979 (50 U.S.C. App. 2405(j)(i)(A)), to be a country the government of which has repeatedly provided support for such acts of international terrorism. As of the date of this provision, terrorist countries subject to this provision include: Cuba, Iran, Sudan, and Syria.

(3) "Significant interest" means --

(i) Ownership of or beneficial interest in 5 percent or more of the firm's or subsidiary's securities. Beneficial interest includes holding 5 percent or more of any class of the firm's securities in "nominee shares," "street names," or some other method of holding securities that does not disclose the beneficial owner;

(ii) Holding a management position in the firm, such as a director or officer;

(iii) Ability to control or influence the election, appointment, or tenure of directors or officers in the firm;

(iv) Ownership of 10 percent or more of the assets of a firm such as equipment, buildings, real estate, or other tangible assets of the firm; or

(v) Holding 50 percent or more of the indebtness of a firm.

(b) "Prohibition on award."

In accordance with 10 U.S.C. 2327, no contract may be awarded to a firm or a subsidiary of a firm if the government of a terrorist country has a significant interest in the firm or subsidiary or, in the case of a subsidiary, the firm that owns the subsidiary, unless a waiver is granted by the Secretary of Defense.

(c) "Disclosure."

If the government of a terrorist country has a significant interest in the Offeror or a subsidiary of the Offeror, the Offeror shall disclosure such interest in an attachment to its offer. If the Offeror is a subsidiary, it shall also disclose any significant interest the government of a terrorist country has in any firm that owns or controls the subsidiary. The disclosure shall include --

(1) Identification of each government holding a significant interest; and

(2) A description of the significant interest held by each government.

(End of provision)

252.225-7031 SECONDARY ARAB BOYCOTT OF ISRAEL (JUN 2005)

(a) Definitions. As used in this provision--

(1) Foreign person means any person (including any individual, partnership, corporation, or other form of association) other than a United States person.

(2) United States means the 50 States, the District of Columbia, outlying areas, and the outer Continental Shelf as defined in 43 U.S.C. 1331.

(3) United States person is defined in 50 U.S.C. App. 2415(2) and means--

(i) Any United States resident or national (other than an individual resident outside the United States who is employed by other than a United States person);

(ii) Any domestic concern (including any permanent domestic establishment of any foreign concern); and

(iii) Any foreign subsidiary or affiliate (including any permanent foreign establishment) of any domestic concern that is controlled in fact by such domestic concern.

(b) Certification. If the offeror is a foreign person, the offeror certifies, by submission of an offer, that it--

(1) Does not comply with the Secondary Arab Boycott of Israel; and

(2) Is not taking or knowingly agreeing to take any action, with respect to the Secondary Boycott of Israel by Arab countries, which 50 U.S.C. App. 2407(a) prohibits a United States person from taking.

(End of provision)

5252.228-9300 INDIVIDUAL SURETY/SURETIES (JUN 1994)

As prescribed in FAR 28.203(a), individual sureties will be permitted. In order for the Contracting Officer to make a determination as to the acceptability of individuals proposed as sureties, as prescribed in FAR 28-203(b), all proposers who submit bonds which are executed by individual sureties are requested to furnish additional information in support of SF-28, Affidavit of Individual Surety, with the bonds. Pursuant to Instruction 3(b) of Standard Form 24, the Bond, Standard Form 25, the Performance Bond, and the Standard Form 25A, the Payment Bond, the Contracting Officer requests the following information:

(a) Equity Securities (Stock):

(1) State the place(s) of incorporation and address of the principal place of business for each issuing corporation listed.

(2) State whether the security issued was issued by public or private offering and give the place of registration of the security.

(3) State whether the security is presently, actively traded.

(b) Debt Securities (Bonds) and Certificates of Deposit:

(1) List the type of bonds held and their maturity dates.

(2) State the name, address, and telephone number of the issuing agency, firm or individual.

(3) State the complete address(es) where the bonds are held.

(4) State whether the bonds have been pledged as security or have otherwise been encumbered.

(c) Real Property Interests:

(1) Provide complete recording data for the conveyance of each parcel or interest listed to the individual proposed as surety.

(2) State whether the values listed are based upon personal evaluation or evaluation of an experienced real estate appraiser. If available, provide copies of written appraisals.

(3) State the method(s) of valuation upon which appraisal is based.

(4) Provide the assessed value of each property interest listed utilized by the appropriate tax assessor for purposes of property taxation.

(5) Provide the telephone number, including area code, for the tax assessor who performed the most recent tax assessment.

(6) State whether each real property interest listed is currently under lien or in any way encumbered and the dollar amount of each such lien or encumbrance.

(d) Persons Proposed as Individual Sureties:

(1) A current list of all other bonds (bid, performance, and payment) on which the individual is a surety and bonds for which the individual is requesting to be a surety.

(2) A statement as to the percent of completion of projects for which the individual is bound on a performance bond.

This information is necessary to enable the Contracting Officer to evaluate the sufficiency of the surety's net worth in a timely manner.

SECTION 00210

EVALUATION FACTORS FOR AWARD

TABLE OF CONTENTS

PART I GENERAL
- **1.1 SOURCE SELECTION**
- **1.2 INTENT TO AWARD WITHOUT DISCUSSIONS**
- **1.3 BASIS OF AWARD**
- **1.4 ENFORCEABILITY OF PROPOSAL**

PART II EVALUATION FACTORS
- **2.1 EVALUATION CRITERIA**
- **2.2 PRICE EVALUATION**
- **2.3 EVALUATION FACTORS AND PROPOSAL SUBMISSION REQUIREMENTS**
- **2.4 FINAL SELECTION**

PART I GENERAL

1.1 SOURCE SELECTION

This competitive Service Disabled Veteran-Owned Small Business (SDVOSB) set-aside procurement uses source selection procedures to select the responsible offeror whose proposal conforms to the requirements of the solicitation and is determined to provide the best value to the Government, price and other factors considered. The Government reserves the right to eliminate from consideration for award any or all offers at any time prior to award of the contract; to negotiate with offerors in the competitive range; and to award the contract to the offeror submitting the lowest price technically acceptable (LPTA) proposal.

1.2 INTENT TO AWARD WITHOUT DISCUSSIONS

The Government intends to evaluate proposals and award a contract without discussions with offerors (except clarifications as described in FAR 15.306(a)). The Government reserves the right to conduct discussions if the Contracting Officer later determines them to be necessary. In addition, if the Contracting Officer determines that the number of proposals that would otherwise be in the competitive range exceeds the number at which an efficient competition can be conducted, the Contracting Officer may limit the number of proposals in the competitive range to the greatest number that will permit an efficient competition among the most highly rated proposals.

1.3 BASIS OF AWARD

The LPTA process is selected as appropriate for this acquisition because the best value is expected to result from selection of the technically acceptable proposal with the lowest evaluated price. An overall non-price rating must be at least “ACCEPTABLE” in order to be eligible for award. An “UNACCEPTABLE” rating in any factor results in the overall non-price proposal being rated “UNACCEPTABLE” unless corrected through discussions. An overall non-price rating of “UNACCEPTABLE” makes a proposal ineligible for award.

1.4 ENFORCEABILITY OF PROPOSAL

The proposal must set forth full, accurate and complete information as required by this solicitation. The Government will rely on such information in the award of the contract. By submission of the offer, the Offeror agrees that all items proposed will be utilized for the duration of the contract and any substitutions will require prior Contracting Officer’s approval.

PART II EVALUATION FACTORS

2.1 EVALUATION CRITERIA

a. The contract resulting from this solicitation will be awarded to the responsible Offeror whose offer, conforming to the solicitation, is determined to be the lowest price technically acceptable (LPTA) proposal based on the evaluation factors set forth in the solicitation.

b. "Relevant" means similar to the instant acquisition in terms of complexity and nature of the work being solicited. The Government will only consider projects for painting construction services.

c. Past performance information on "relevant projects" meeting the definition in paragraph (b) will constitute the primary consideration in the Government's evaluation under this factor. The Government may, however, review and consider past performance information on other projects as made available to the Government from other sources such as the Construction Contractor Appraisal Support System (CCASS) and inquiries with previous clients / owners. The Government will determine the relevance of the past performance information received on other projects, as well as consider the source, context and currency of such information in its evaluation.

d. Offerors who submit past performance and experience information of a parent, sister, predecessor or other affiliated company must describe what involvement such company will have on the instant acquisition. The proposal should clearly indicate how the resources of the parent, sister, predecessor or other affiliated company – its workforce, management, facilities, or other resources – will be provided or relied upon for contract performance.

e. The Contracting Officer may discount favorable past performance and experience of a subcontractor unless the prime contractor clearly provides, in its proposal, evidence of a **binding teaming agreement or other contractual agreement** which creates legal responsibility on the part of the subcontractors.

f. The Offeror will not be rated "ACCEPTABLE" or "UNACCEPTABLE" if the Offeror does not have a record of relevant past performance or if a record of past performance is unavailable. However, an Offeror with "ACCEPTABLE" relevant past performance may be considered more favorably than an Offeror with no past performance information.

g. The Government, in compliance with FAR 15.305(a)(2)(ii), will allow Offerors to provide information on any problems encountered on any identified contracts, and any corrective actions taken by the Offeror.

2.2 PRICE EVALUATION

The price proposal will be evaluated to determine the reasonableness and completeness of the Offeror's proposal. Unrealistically low (or high) proposed prices or prices unbalanced between the various option years, initially or subsequently, may be grounds for eliminating a proposal from competition either on the basis that the Offeror does not understand the requirement, or has made an unrealistic proposal.

2.3 EVALUATION FACTORS AND PROPOSAL SUBMISSION REQUIREMENTS

a. The Offeror's proposal shall contain a response to each of the evaluation factors and shall be in the form prescribed by this solicitation. Evaluation factors are divided into two categories: Non-Price (Factors 1 through 3) and Price (Factor 4). The evaluation factors for this acquisition are:

Factor 1 – Experience
Factor 2 – Safety
Factor 3 – Past Performance
Factor 4 – Price

b. The distinction between experience and past performance is experience pertains to the types of work and volume of work completed by a contractor that are comparable to the types of work covered by this requirement, in terms of size, scope, and complexity. Past performance relates to how well a contractor has performed.

c. Definitions:

DEFICIENCY: A material failure of a proposal to meet a Government requirement or a combination of significant weaknesses in a proposal that increases the risk of unsuccessful contract performance to an unacceptable level.

WEAKNESS: A flaw in the proposal that increases the risk of unsuccessful contract performance.

SIGNIFICANT WEAKNESS: A flaw in the proposal that appreciably increases the risk of unsuccessful contract performance.

ACCEPTABLE FEATURES: A proposed method or technique in the proposal that addresses solicitation requirements such that no further explanation or documentation is necessary.

PAST PERFORMANCE: Relates to how well an Offeror has performed; e.g., the quality of work accomplished, schedule compliance, client satisfaction.

EXPERIENCE: Pertains to work currently or previously performed by an Offeror, which is the same or similar to the work that may be ordered under this contract.

PROJECT: A construction activity or task, resulting in the painting of a building similar in scope to the work described in this solicitation.

OFFEROR: Refers to the Contractor submitting the proposal as Offeror, including joint ventures, whose name appears in Block 14 of Standard Form 1442 (Solicitation, Offer and Award).

THREE-YEAR PERIOD: Refers to period of time for which projects may be submitted for **experience or past performance**. The three-year period is calculated by counting back three years from date of issuance of this RFP.

PAGE: Refers to one printed side of a piece of paper. (For example, 5 pieces of paper printed on both sides would result in 10 pages of narrative.)

d. The following describes each evaluation factor, submittal requirements and basis for assigning ratings:

(1) FACTOR 1: EXPERIENCE

(a) Solicitation Submittal Requirements:

Under Tab 1 of the proposal, Offeror shall submit a minimum of three (3) and a maximum of five (5) painting construction projects with overlapping performance periods that best demonstrate the Offeror's experience on relevant projects that are similar in size, scope, and complexity to the RFP. For purposes of this evaluation, a relevant project is further defined as interior and exterior painting, surface preparation on previously painted and unpainted buildings, application of new paint and incidental related work. Offerors must demonstrate the ability to perform multiple projects in different locations simultaneously. Any projects submitted in excess of the five (5) will be removed prior to evaluation and will not be considered.

Projects submitted for the Offeror shall be completed within the past three (3) years of the date of issuance of this RFP.

A project is defined as a construction project performed under a single task order or contract. For multiple award and indefinite delivery/indefinite quantity type contracts, the contract as a whole shall not be submitted as a project; rather Offerors shall submit the work performed under a task order as a project.

The attached Offeror Experience Project Data Sheet in Exhibit 1 is MANDATORY and SHALL be used to submit project information for each project. Individual blocks on Exhibit 1 may be expanded; however, total length for each project data sheet shall not exceed one (1) double-sided page (or two (2) single-sided pages). For all submitted projects, the description of the project shall clearly describe the scope of work performed and the relevancy to the project requirements of this RFP (i.e., unique features, area, construction methods).

The project data sheets shall be accompanied by a one-page summary project timeline sheet, which shall include timelines for all submitted projects of the Offeror, to visually demonstrate overlapping periods of performance. A sample timeline is provided as Exhibit 2. The summary project timeline shall not exceed one single-sided page.

Any pages submitted in addition to the project data sheets and summary project timeline sheet shall be discarded prior to evaluation. Except as specifically requested, the Government will not consider information submitted in addition to the project data sheets and summary project timeline sheet.

If the Offeror is a Joint Venture (JV), relevant project experience should be submitted for projects completed by the Joint Venture entity or the Joint Venture partners. Offerors are still limited to a total of five (5) projects combined.

If an Offeror is utilizing experience information of affiliates/subsidiaries/parent/ LLC/LTD member companies (name is not exactly as stated on the SF1442), the proposal shall clearly demonstrate that the affiliate/subsidiary/parent firm will have meaningful involvement in the performance of the contract in order for the project experience information of the affiliate/subsidiary/parent/LLC/LTD member companies to be considered. The proposal shall state specific commitments of technical resources (e.g. personnel, equipment) that the affiliate/subsidiary/parent/LLC/LTD member companies commit to the performance of this contract. In particular, the proposal will clearly state the specific commitments of resources of the affiliate/subsidiary/parent/LLC/LTD member that will be located at the worksites and company offices in the city/area of the project. The proposal shall also describe specific roles of the affiliate/subsidiary/ parent/LLC/LTD member companies in terms of the work it will either self-perform or manage on behalf of the Offeror in performance of the contract.

(b) Basis of Evaluation:

The requirement for acceptability is demonstration of experience in three projects with overlapping performance periods that are similar in size, scope, and complexity to the work in the RFP. Projects submitted for the Offeror shall: (1) include minimum three recent and relevant projects; and (2) demonstrate the ability to perform multiple projects in different locations simultaneously. For purposes of this evaluation, a relevant project is further defined as interior and exterior painting, surface preparation on previously painted and unpainted buildings, application of new paint and incidental related work. An Offeror's proposal that fails to demonstrate the required experience will be considered UNACCEPTABLE.

(2) <u>FACTOR 2: SAFETY</u>

(a) Solicitation Submittal Requirements:

Under Tab 2 of the proposal, Offeror shall submit the following information: (For a partnership or joint venture, the following submittal requirements are required for each contractor who is part of the partnership or joint venture; however, only one safety narrative is required. TRC and DART Rates shall not be submitted for subcontractors.)

(1) OSHA Total Recordable Case (TRC) Rate:

For the **three** (3) [2012, 2013, 2014] previous complete calendar years, submit your OSHA Total Recordable Case (TRC) Rate, as defined by the U.S. Department of Labor, Occupational Safety and Health Administration. If you cannot submit an OSHA TRC Rate, affirmatively state so, and explain why. Any extenuating circumstances that affected the OSHA TRC Rate should be addressed as part of this element. OSHA TRC rates above 4.0, in any of the previous three (3) years, will be considered UNACCEPTABLE, unless an adequate explanation is provided to address the extenuating circumstances that affected the rate.

(2) OSHA Days Away from Work, Restricted Duty, or Job Transfer (DART) Rate:

For the **three** (3) [2012, 2013, 2014] previous complete calendar years, submit your OSHA Days Away from Work, Restricted Duty, or Job Transfer (DART) Rate, as defined by the U.S. Department of Labor, Occupational Safety and Health Administration. If you cannot submit an OSHA DART Rate, affirmatively state so, and explain why. Any extenuating circumstances that affected the OSHA DART Rate data should be addressed as part of this element. OSHA DART rates above 2.0, in any of the previous three (3) years, will be considered UNACCEPTABLE, unless an adequate explanation is provided to address the extenuating circumstances that affected the rate.

(3) Technical Approach for Safety:

Describe the plan that the Offeror will implement to qualify, evaluate, select and oversee its potential subcontractors. The Safety narrative shall be limited to two pages. Offerors must submit both (1) a plan to include the safety performance of subcontractors in the selection process for all levels of subcontractors and (2) a plan to monitor the safety of those subcontractors during contract performance, highlighting what specific management practices will be in place for providing deliberate safety program management and mishap prevention support to those sub-contractors whose TRC is greater than 4.0 and whose DART rate is greater than 2.0. Offerors who fail to submit either of these will be rated UNACCEPTABLE.

(b) Basis of Evaluation:

The Government is seeking to determine whether the Offeror has an acceptable safety record. The Government will evaluate the Offeror's overall safety record as evidenced by the TRC and DART rates, if the Offeror's plan includes safety in the evaluation and selection of subcontractors, and if the narrative includes a plan to monitor the safety performance of subcontractors during performance. The evaluation will collectively consider the following:

- OSHA Total Recordable Case (TRC) Rate
- OSHA Days Away from Work, Restricted Duty, or Job Transfer (DART) Rate
- Offeror Technical Approach to Safety

(1) OSHA Total Recordable Case (TRC) Rate: The Government will evaluate the OSHA TRC Rate to determine if the Offeror's OSHA TRC rate is above 4.0 and extenuating circumstances that impact the rates. OSHA TRC rates above 4.0, in any of the previous three (3) years, will be considered UNACCEPTABLE, unless an adequate explanation is provided to address the extenuating circumstances that affected the rate.

(2) OSHA Days Away from Work, Restricted Duty, or Job Transfer (DART) Rate: The Government will evaluate the OSHA DART Rate to determine if the Offeror's OSHA DART rate is above 2.0 and extenuating circumstances that impact the rates. OSHA DART rates above 2.0, in any of the previous three (3) years, will be considered UNACCEPTABLE, unless an adequate explanation is provided to address the extenuating circumstances that affected the rate.

(3) Technical Approach to Safety: The Government will evaluate the narrative to determine if subcontractor safety performance will be considered in the qualification, evaluation, selection, of all levels of subcontractors on the upcoming project, and both the plan to monitor the safety of those subcontractors during contract performance, highlighting what specific management practices will be in place for providing deliberate safety program management and mishap prevention support to those sub-contractors whose TRC is greater than 4.0 and whose DART rate is greater than 2.0. Offerors who fail to address either of these items (i.e. whether the safety performance of subcontractors will be evaluated in the selection process for all levels of subcontractors and whether the safety of those subcontractors will be monitored during contract performance) will be rated UNACCEPTABLE.

(3) FACTOR 3: PAST PERFORMANCE

(a) Solicitation Submittal Requirements:

Under Tab 3 of the proposal, Offeror shall submit a completed Construction Contractor Appraisal Support System (CCASS) evaluation for each project included in Factor 1, Experience. If there is not a completed CCASS evaluation then submit a Past Performance Questionnaire (Exhibit 3). The Offeror should provide completed Past Performance Questionnaires (PPQ) in the proposal. Offerors shall not incorporate by reference into their proposal PPQs previously submitted for other RFPs. However, this does not preclude the Government from utilizing previously submitted PPQ information in the past performance evaluation. If the Offeror is unable to obtain a completed PPQ from a client for a project(s) before the proposal closing date, the Offeror should complete and submit with the proposal the first page of the PPQ, which will provide contract and client information for the respective project(s). The Government may make reasonable attempts to contact the client noted for that project(s) to obtain the PPQ information. However, Offerors should follow-up with clients/references to help ensure timely submittal of questionnaires. If the client requests, questionnaires may be submitted directly to the Government's point of contact, Contract Specialist Janeen Bais at Janeen.Bais@fe.navy.mil.

Offerors may provide any information on problems encountered and the corrective actions taken on projects submitted under Factor 1 – Experience. Offerors may also address any adverse past performance issues. Explanations shall not exceed two (2) double-sided pages (or four (4) single-sided pages) in total.

The Government reserves that right to contact references for verification or additional information. The Government's inability to contract any of the Offeror's references or the references unwillingness to provide the information requested may affect the Government's evaluation of this factor. In addition to the above, the Government reserves the right to obtain information for use in the evaluation of past performance from any and all sources including sources outside of the Government. Other sources may include, but are not limited to, past performance information retrieved through the Past Performance Information Retrieval System (PPIRS) using all CAGE/DUNS numbers of Contractors who are part of a partnership or joint venture identified in the Offeror's proposal, inquiries of owner representative(s), Federal Awardee Performance and Integrity Information System (FAPIIS), Electronic Subcontract Reporting System (eSRS), and any other known sources not provided by the Offeror.

Performance award or additional information submitted will not be considered.

(b) Basis of Evaluation:

This evaluation focuses on how well the Offeror performed on the relevant projects submitted under Factor 1 – Experience and past performance on other projects currently documented in known sources. Based on the Offeror's performance record, the Government has a reasonable expectation that the Offeror will successfully perform the required effort, or the Offeror's performance record is unknown.

The Government will consider the currency and relevance of the information, the source of the information, context of the data, and general trends in the Contractor's performance. This evaluation is separate and distinct from the Contracting Officer's responsibility determination.

In the case of an Offeror without a record of relevant past performance or for whom information on past performance is not available or so sparse that no meaningful past performance rating can be reasonably assigned, the Offeror may not be evaluated favorably or unfavorably on past performance. Therefore, the Offeror shall be determined to have unknown past performance. In the context of acceptability/unacceptability, "unknown" shall be considered "acceptable".

(4) FACTOR 4: PRICE

(a) Solicitation Submittal Requirements:

The offeror shall submit the following in the order shown below in a sealed envelope.

Envelope is to be clearly marked in the bottom right corner as follows:

OFFEROR'S NAME
PRICE PROPOSAL SUBMITTED UNDER RFP N40192-15-R-2900
PAINTING IDIQ CONTRACT, VARIOUS LOCATIONS, GUAM
DO NOT OPEN IN MAILROOM

(1) Standard Form (SF) 1442 (Solicitation, Offer, and Award) – Offeror is to complete:

(i) Blocks 14 through 20c, and
(ii) Schedule of prices in Exhibits A thru E.

(2) Representations and Certifications – Offeror is to complete Section 00600 of the solicitation and the System for Award Management (SAM).

(3) Bonding Capacity – Offeror is to provide a letter from bonding agent or surety indicating single and aggregate bonding capacity for task order awards under this contract.

(b) Basis of Evaluation:

The Government will evaluate price based on the total price. Total price consists of the basic requirements and all option items. The Government intends to evaluate all options and has included the provision FAR 52.217-5, Evaluation of Options (JUL 1990) in the solicitation. In accordance with FAR 52.217-5, Evaluation of Options will not obligate the Government to exercise the option(s). Analysis will be performed by one or more of the following techniques to ensure a fair and reasonable price:

(1) Comparison of proposed prices received in response to the RFP.

(2) Comparison of proposed prices with the Independent Government Estimate (IGE).

(3) Comparison of proposed prices with available historical information.

(4) Unrealistically low (or high) proposed prices or prices unbalanced between the various option periods, initially or subsequently, may be grounds for eliminating a proposal from competition either on the basis that the offeror does not understand the requirement, or has made an unrealistic proposal.

2.4 FINAL SELECTION

Final selection will be made to the responsible Offeror whose offer, conforming to the solicitation, is determined to be the lowest price technically acceptable (LPTA) proposal based on the evaluation factors set forth in the solicitation. In addition to receiving a contract award, the best value Offeror will receive a minimum guarantee of $10,000.

Section 00600 - Representations & Certifications

CLAUSES INCORPORATED BY FULL TEXT

52.204-8 ANNUAL REPRESENTATIONS AND CERTIFICATIONS (NOV 2014)

(a)(1) The North American Industry Classification System (NAICS) code for this acquisition is **238320, Painting and Wall Covering Contractors**.

(2) The small business size standard is **$15,000,000**.

(3) The small business size standard for a concern which submits an offer in its own name, other than on a construction or service contract, but which proposes to furnish a product which it did not itself manufacture, is 500 employees.

(b)(1) If the provision at 52.204-7, System for Award Management, is included in this solicitation, paragraph (d) of this provision applies.

(2) If the provision at 52.204-7 is not included in this solicitation, and the offeror is currently registered in System for Award Management (SAM), and has completed the Representations and Certifications section of SAM electronically, the offeror may choose to use paragraph (d) of this provision instead of completing the corresponding individual representations and certifications in the solicitation. The offeror shall indicate which option applies by checking one of the following boxes:

( ) Paragraph (d) applies.

( ) Paragraph (d) does not apply and the offeror has completed the individual representations and certifications in the solicitation.

(c)(1) The following representations or certifications in SAM are applicable to this solicitation as indicated:

(i) 52.203-2, Certificate of Independent Price Determination. This provision applies to solicitations when a firm-fixed-price contract or fixed-price contract with economic price adjustment is contemplated, unless--

(A) The acquisition is to be made under the simplified acquisition procedures in Part 13;

(B) The solicitation is a request for technical proposals under two-step sealed bidding procedures; or

(C) The solicitation is for utility services for which rates are set by law or regulation.

(ii) 52.203-11, Certification and Disclosure Regarding Payments to Influence Certain Federal Transactions. This provision applies to solicitations expected to exceed $150,000.

(iii) 52.204-3, Taxpayer Identification. This provision applies to solicitations that do not include the provision at 52.204-7, System for Award Management.

(iv) 52.204-5, Women-Owned Business (Other Than Small Business).This provision applies to solicitations that--

(A) Are not set aside for small business concerns;

(B) Exceed the simplified acquisition threshold; and

(C) Are for contracts that will be performed in the United States or its outlying areas.

(v) 52.209-2, Prohibition on Contracting with Inverted Domestic Corporations--Representation. This provision applies to solicitations using funds appropriated in fiscal years 2008, 2009, 2010, or 2012.

(vi) 52.209-5, Certification Regarding Responsibility Matters. This provision applies to solicitations where the contract value is expected to exceed the simplified acquisition threshold.

(vii) 52.214-14, Place of Performance – Sealed Bidding. This provision applies to invitations for bids except those in which the place of performance is specified by the Government.

(viii) 52.215-6, Place of Performance. This provision applies to solicitations unless the place of performance is specified by the Government.

(ix) 52.219-1, Small Business Program Representations (Basic & Alternate I). This provision applies to solicitations when the contract will be performed in the United States or its outlying areas.

(A) The basic provision applies when the solicitations are issued by other than DoD, NASA, and the Coast Guard.

(B) The provision with its Alternate I applies to solicitations issued by DoD, NASA, or the Coast Guard.

(x) 52.219-2, Equal Low Bids. This provision applies to solicitations when contracting by sealed bidding and the contract will be performed in the United States or its outlying areas.

(xi) 52.222-22, Previous Contracts and Compliance Reports. This provision applies to solicitations that include the clause at 52.222-26, Equal Opportunity.

(xii) 52.222-25, Affirmative Action Compliance. This provision applies to solicitations, other than those for construction, when the solicitation includes the clause at 52.222-26, Equal Opportunity.

(xiii) 52.222-38, Compliance with Veterans' Employment Reporting Requirements. This provision applies to solicitations when it is anticipated the contract award will exceed the simplified acquisition threshold and the contract is not for acquisition of commercial items.

(xiv) 52.223-1, Biobased Product Certification. This provision applies to solicitations that require the delivery or specify the use of USDA-designated items; or include the clause at 52.223-2, Affirmative Procurement of Biobased Products Under Service and Construction Contracts.

(xv) 52.223-4, Recovered Material Certification. This provision applies to solicitations that are for, or specify the use of, EPA-designated items.

(xvi) 52.225-2, Buy American Certificate. This provision applies to solicitations containing the clause at 52.225-1.

(xvii) 52.225-4, Buy American--Free Trade Agreements--Israeli Trade Act Certificate. (Basic, Alternates I, II, and III.) This provision applies to solicitations containing the clause at 52.225-3.

(A) If the acquisition value is less than $25,000, the basic provision applies.

(B) If the acquisition value is $25,000 or more but is less than $50,000, the provision with its Alternate I applies.

(C) If the acquisition value is $50,000 or more but is less than $79,507, the provision with its Alternate II applies.

(D) If the acquisition value is $79,507 or more but is less than $100,000, the provision with its Alternate III applies.

(xviii) 52.225-6, Trade Agreements Certificate. This provision applies to solicitations containing the clause at 52.225-5.

(xix) 52.225-20, Prohibition on Conducting Restricted Business Operations in Sudan--Certification. This provision applies to all solicitations.

(xx) 52.225-25, Prohibition on Contracting with Entities Engaging in Certain Activities or Transactions Relating to Iran--Representation and Certifications. This provision applies to all solicitations.

(xxi) 52.226-2, Historically Black College or University and Minority Institution Representation. This provision applies to solicitations for research, studies, supplies, or services of the type normally acquired from higher educational institutions; and --

(2) The following certifications are applicable as indicated by the Contracting Officer:

(Contracting Officer check as appropriate.)

(i) 52.204-17, Ownership or Control of Offeror.

(ii) 52.222-18, Certification Regarding Knowledge of Child Labor for Listed End Products.

(iii) 52.222-48, Exemption from Application of the Service Contract Labor Standards to Contracts for Maintenance, Calibration, or Repair of Certain Equipment--Certification.

(iv) 52.222-52, Exemption from Application of the Service Contract Labor Standards to Contracts for Certain Services--Certification.

(v) 52.223-9, with its Alternate I, Estimate of Percentage of Recovered Material Content for EPA–Designated Products (Alternate I only).

(vi) 52.227-6, Royalty Information.

(A) Basic.

(B) Alternate I.

(vii) 52.227-15, Representation of Limited Rights Data and Restricted Computer Software.

(d) The offeror has completed the annual representations and certifications electronically via the SAM website accessed through https://www.acquisition.gov. After reviewing the SAM database information, the offeror verifies by submission of the offer that the representations and certifications currently posted electronically that apply to this solicitation as indicated in paragraph (c) of this provision have been entered or updated within the last 12 months, are current, accurate, complete, and applicable to this solicitation (including the business size standard applicable to the NAICS code referenced for this solicitation), as of the date of this offer and are incorporated in this offer by reference (see FAR 4.1201); except for the changes identified below [offeror to insert changes, identifying change by clause number, title, date]. These amended representation(s) and/or certification(s) are also incorporated in this offer and are current, accurate, and complete as of the date of this offer.

FAR Clause	Title	Date	Change

Any changes provided by the offeror are applicable to this solicitation only, and do not result in an update to the representations and certifications posted on SAM.

(End of provision)

252.204-7007 ALTERNATE A, ANNUAL REPRESENTATIONS AND CERTIFICATIONS (AUG 2014)

Substitute the following paragraphs (d) and (e) for paragraph (d) of the provision at FAR 52.204-8:

(d)(1) The following representations or certifications in the System for Award Management (SAM) database are applicable to this solicitation as indicated:

(i) 252.209-7001, Disclosure of Ownership or Control by the Government of a Terrorist Country. Applies to all solicitations expected to result in contracts of $150,000 or more.

(ii) 252.209-7003, Reserve Officer Training Corps and Military Recruiting on Campus--Representation. Applies to all solicitations with institutions of higher education.

(iii) 252.216-7008, Economic Price Adjustment--Wage Rates or Material Prices Controlled by a Foreign Government. Applies to solicitations for fixed-price supply and service contracts when the contract is to be performed wholly or in part in a foreign country, and a foreign government controls wage rates or material prices and may during contract performance impose a mandatory change in wages or prices of materials.

(iv) 252.225-7042, Authorization to Perform. Applies to all solicitations when performance will be wholly or in part in a foreign country.

(v) 252.225-7049, Prohibition on Acquisition of Commercial Satellite Services from Certain Foreign Entities--Representations. Applies to solicitations for the acquisition of commercial satellite services.

(vi) 252.229-7012, Tax Exemptions (Italy)--Representation. Applies to solicitations when contract performance will be in Italy.

(vii) 252.229-7013, Tax Exemptions (Spain)--Representation. Applies to solicitations when contract performance will be in Spain.

(2) The following representations or certifications in SAM are applicable to this solicitation as indicated by the Contracting Officer: [Contracting Officer check as appropriate.]

__X__ (i) 252.209-7002, Disclosure of Ownership or Control by a Foreign Government.

____ (ii) 252.225-7000, Buy American--Balance of Payments Program Certificate.

____ (iii) 252.225-7020, Trade Agreements Certificate.

____ Use with Alternate I.

__X__ (iv) 252.225-7031, Secondary Arab Boycott of Israel.

____ (v) 252.225-7035, Buy American--Free Trade Agreements--Balance of Payments Program Certificate.

____ Use with Alternate I.

____ Use with Alternate II.

____ Use with Alternate III.

____ Use with Alternate IV.

____ Use with Alternate V.

(e) The offeror has completed the annual representations and certifications electronically via the SAM Web site at https://www.acquisition.gov/. After reviewing the SAM database information, the offeror verifies by submission of the offer that the representations and certifications currently posted electronically that apply to this solicitation as indicated in FAR 52.204-8(c) and paragraph (d) of this provision have been entered or updated within the last 12 months, are current, accurate, complete, and applicable to this solicitation (including the business size standard applicable to the NAICS code referenced for this solicitation), as of the date of this offer, and are incorporated in this offer by reference (see FAR 4.1201); except for the changes identified below ____ [offeror to insert changes, identifying change by provision number, title, date]. These amended representation(s) and/or certification(s) are also incorporated in this offer and are current, accurate, and complete
as of the date of this offer.

FAR/DFARS Clause #	Title	Date	Change

Any changes provided by the offeror are applicable to this solicitation only, and do not result in an update to the representations and certifications located in the SAM database.

(End of provision)

252.247-7022 REPRESENTATION OF EXTENT OF TRANSPORTATION BY SEA (AUG 1992)

(a) The Offeror shall indicate by checking the appropriate blank in paragraph (b) of this provision whether transportation of supplies by sea is anticipated under the resultant contract. The term supplies is defined in the Transportation of Supplies by Sea clause of this solicitation.

(b) Representation. The Offeror represents that it:

____ (1) Does anticipate that supplies will be transported by sea in the performance of any contract or subcontract resulting from this solicitation.

____ (2) Does not anticipate that supplies will be transported by sea in the performance of any contract or subcontract resulting from this solicitation.

(c) Any contract resulting from this solicitation will include the Transportation of Supplies by Sea clause. If the Offeror represents that it will not use ocean transportation, the resulting contract will also include the Defense FAR Supplement clause at 252.247-7024, Notification of Transportation of Supplies by Sea.

(End of provision)

Section 00700 - Contract Clauses

CLAUSES INCORPORATED BY REFERENCE

52.202-1	Definitions	NOV 2013
52.203-3	Gratuities	APR 1984
52.203-5	Covenant Against Contingent Fees	MAY 2014
52.203-6	Restrictions On Subcontractor Sales To The Government	SEP 2006
52.203-7	Anti-Kickback Procedures	MAY 2014
52.203-8	Cancellation, Rescission, and Recovery of Funds for Illegal or Improper Activity	MAY 2014
52.203-10	Price Or Fee Adjustment For Illegal Or Improper Activity	MAY 2014
52.203-12	Limitation On Payments To Influence Certain Federal Transactions	OCT 2010
52.203-13	Contractor Code of Business Ethics and Conduct	APR 2010
52.203-17	Contractor Employee Whistleblower Rights and Requirement To Inform Employees of Whistleblower Rights	APR 2014
52.204-2 Alt II	Security Requirements (Aug 1996) - Alternate II	APR 1984
52.204-4	Printed or Copied Double-Sided on Postconsumer Fiber Content Paper	MAY 2011
52.204-9	Personal Identity Verification of Contractor Personnel	JAN 2011
52.204-10	Reporting Executive Compensation and First-Tier Subcontract Awards	JUL 2013
52.204-13	System for Award Management Maintenance	JUL 2013
52.204-15	Service Contract Reporting Requirements for Indefinite-Delivery Contracts	JAN 2014
52.209-6	Protecting the Government's Interest When Subcontracting With Contractors Debarred, Suspended, or Proposed for Debarment	AUG 2013
52.209-10	Prohibition on Contracting With Inverted Domestic Corporations	MAY 2012
52.210-1	Market Research	APR 2011
52.211-13	Time Extensions	SEP 2000
52.211-15	Defense Priority And Allocation Requirements	APR 2008
52.211-18	Variation in Estimated Quantity	APR 1984
52.215-2	Audit and Records--Negotiation	OCT 2010
52.215-10	Price Reduction for Defective Certified Cost or Pricing Data	AUG 2011
52.215-11	Price Reduction for Defective Certified Cost or Pricing Data--Modifications	AUG 2011
52.215-12	Subcontractor Certified Cost or Pricing Data	OCT 2010
52.215-13	Subcontractor Certified Cost or Pricing Data--Modifications	OCT 2010
52.215-17	Waiver of Facilities Capital Cost of Money	OCT 1997
52.219-8	Utilization of Small Business Concerns	OCT 2014
52.219-14	Limitations On Subcontracting	NOV 2011
52.222-1	Notice To The Government Of Labor Disputes	FEB 1997
52.222-3	Convict Labor	JUN 2003
52.222-4	Contract Work Hours and Safety Standards Act - Overtime Compensation	MAY 2014
52.222-10	Compliance with Copeland Act Requirements	FEB 1988
52.222-11	Subcontracts (Labor Standards)	MAY 2014
52.222-12	Contract Termination-Debarment	MAY 2014
52.222-14	Disputes Concerning Labor Standards	FEB 1988
52.222-15	Certification of Eligibility	MAY 2014

52.222-21	Prohibition Of Segregated Facilities	FEB 1999
52.222-26	Equal Opportunity	MAR 2007
52.222-27	Affirmative Action Compliance Requirements for Construction	FEB 1999
52.222-35	Equal Opportunity for Veterans	JUL 2014
52.222-36	Equal Opportunity for Workers with Disabilities	JUL 2014
52.222-37	Employment Reports on Veterans	JUL 2014
52.222-40	Notification of Employee Rights Under the National Labor Relations Act	DEC 2010
52.222-50	Combating Trafficking in Persons	FEB 2009
52.222-54	Employment Eligibility Verification	AUG 2013
52.223-3	Hazardous Material Identification And Material Safety Data	JAN 1997
52.223-5 Alt I	Pollution Prevention and Right-to-Know Information (May 2011) Alternate I	MAY 2011
52.223-6	Drug-Free Workplace	MAY 2001
52.223-12	Refrigeration Equipment and Air Conditioners	MAY 1995
52.223-17	Affirmative Procurement of EPA-Designated Items in Service and Construction Contracts	MAY 2008
52.223-18	Encouraging Contractor Policies To Ban Text Messaging While Driving	AUG 2011
52.225-13	Restrictions on Certain Foreign Purchases	JUN 2008
52.227-1	Authorization and Consent	DEC 2007
52.227-2	Notice And Assistance Regarding Patent And Copyright Infringement	DEC 2007
52.227-4	Patent Indemnity-Construction Contracts	DEC 2007
52.228-2	Additional Bond Security	OCT 1997
52.228-5	Insurance - Work On A Government Installation	JAN 1997
52.228-11	Pledges Of Assets	JAN 2012
52.228-12	Prospective Subcontractor Requests for Bonds	MAY 2014
52.228-14	Irrevocable Letter of Credit	NOV 2014
52.228-15	Performance and Payment Bonds--Construction	OCT 2010
52.229-3	Federal, State And Local Taxes	FEB 2013
52.232-5	Payments under Fixed-Price Construction Contracts	MAY 2014
52.232-17	Interest	MAY 2014
52.232-23 Alt I	Assignment of Claims (May 2014) - Alternate I	APR 1984
52.232-27	Prompt Payment for Construction Contracts	MAY 2014
52.232-33	Payment by Electronic Funds Transfer--System for Award Management	JUL 2013
52.232-39	Unenforceability of Unauthorized Obligations	JUN 2013
52.232-40	Providing Accelerated Payments to Small Business Subcontractors	DEC 2013
52.233-1 Alt I	Disputes (May 2014) - Alternate I	DEC 1991
52.233-3	Protest After Award	AUG 1996
52.233-4	Applicable Law for Breach of Contract Claim	OCT 2004
52.236-2	Differing Site Conditions	APR 1984
52.236-3	Site Investigation and Conditions Affecting the Work	APR 1984
52.236-5	Material and Workmanship	APR 1984
52.236-6	Superintendence by the Contractor	APR 1984
52.236-7	Permits and Responsibilities	NOV 1991
52.236-8	Other Contracts	APR 1984
52.236-9	Protection of Existing Vegetation, Structures, Equipment, Utilities, and Improvements	APR 1984
52.236-10	Operations and Storage Areas	APR 1984
52.236-11	Use and Possession Prior to Completion	APR 1984

52.236-12	Cleaning Up	APR 1984
52.236-13 Alt I	Accident Prevention (Nov 1991) - Alternate I	NOV 1991
52.236-15	Schedules for Construction Contracts	APR 1984
52.236-16 Alt I	Quantity Surveys (Apr 1984) - Alternate I	APR 1984
52.236-17	Layout of Work	APR 1984
52.236-21	Specifications and Drawings for Construction	FEB 1997
52.242-13	Bankruptcy	JUL 1995
52.242-14	Suspension of Work	APR 1984
52.243-4	Changes	JUN 2007
52.244-6	Subcontracts for Commercial Items	OCT 2014
52.246-12	Inspection of Construction	AUG 1996
52.246-21	Warranty of Construction	MAR 1994
52.247-64	Preference for Privately Owned U.S. - Flag Commercial Vessels	FEB 2006
52.248-3	Value Engineering-Construction	OCT 2010
52.249-2 Alt I	Termination for Convenience of the Government (Fixed-Price) (Apr 2012) - Alternate I	SEP 1996
52.249-10	Default (Fixed-Price Construction)	APR 1984
52.253-1	Computer Generated Forms	JAN 1991
252.201-7000	Contracting Officer's Representative	DEC 1991
252.203-7001	Prohibition On Persons Convicted of Fraud or Other Defense-Contract-Related Felonies	DEC 2008
252.203-7002	Requirement to Inform Employees of Whistleblower Rights	SEP 2013
252.204-7000	Disclosure Of Information	AUG 2013
252.204-7003	Control Of Government Personnel Work Product	APR 1992
252.204-7005	Oral Attestation of Security Responsibilities	NOV 2001
252.209-7004	Subcontracting With Firms That Are Owned or Controlled By The Government of a Terrorist Country	MAR 2014
252.222-7999	Additional Requirements and Responsibilities Restricting the Use of Mandatory Arbitration Agreements	FEB 2010
252.223-7001	Hazard Warning Labels	DEC 1991
252.223-7004	Drug Free Work Force	SEP 1988
252.223-7006	Prohibition On Storage, Treatment, and Disposal of Toxic or Hazardous Materials	SEP 2014
252.225-7012	Preference For Certain Domestic Commodities	FEB 2013
252.227-7022	Government Rights (Unlimited)	MAR 1979
252.227-7023	Drawings and Other Data to become Property of Government	MAR 1979
252.227-7033	Rights in Shop Drawings	APR 1966
252.231-7000	Supplemental Cost Principles	DEC 1991
252.232-7003	Electronic Submission of Payment Requests and Receiving Reports	JUN 2012
252.236-7000	Modification Proposals-Price Breakdown	DEC 1991
252.236-7002	Obstruction of Navigable Waterways	DEC 1991
252.243-7001	Pricing Of Contract Modifications	DEC 1991
252.243-7002	Requests for Equitable Adjustment	DEC 2012
252.247-7024	Notification Of Transportation Of Supplies By Sea	MAR 2000

CLAUSES INCORPORATED BY FULL TEXT

52.209-9 UPDATES OF PUBLICLY AVAILABLE INFORMATION REGARDING RESPONSIBILITY MATTERS (JULY 2013)
(a) The Contractor shall update the information in the Federal Awardee Performance and Integrity Information System (FAPIIS) on a semi-annual basis, throughout the life of the contract, by posting the required information in the System for Award Management database via https://www.acquisition.gov.

(b) As required by section 3010 of the Supplemental Appropriations Act, 2010 (Pub. L. 111-212), all information posted in FAPIIS on or after April 15, 2011, except past performance reviews, will be publicly available. FAPIIS consists of two segments--

(1) The non-public segment, into which Government officials and the Contractor post information, which can only be viewed by--

(i) Government personnel and authorized users performing business on behalf of the Government; or

(ii) The Contractor, when viewing data on itself; and

(2) The publicly-available segment, to which all data in the non-public segment of FAPIIS is automatically transferred after a waiting period of 14 calendar days, except for--

(i) Past performance reviews required by subpart 42.15;

(ii) Information that was entered prior to April 15, 2011; or

(iii) Information that is withdrawn during the 14-calendar-day waiting period by the Government official who posted it in accordance with paragraph (c)(1) of this clause.

(c) The Contractor will receive notification when the Government posts new information to the Contractor's record.

(1) If the Contractor asserts in writing within 7 calendar days, to the Government official who posted the information, that some of the information posted to the non-public segment of FAPIIS is covered by a disclosure exemption under the Freedom of Information Act, the Government official who posted the information must within 7 calendar days remove the posting from FAPIIS and resolve the issue in accordance with agency Freedom of Information procedures, prior to reposting the releasable information. The contractor must cite 52.209-9 and request removal within 7 calendar days of the posting to FAPIIS.

(2) The Contractor will also have an opportunity to post comments regarding information that has been posted by the Government. The comments will be retained as long as the associated information is retained, i.e., for a total period of 6 years. Contractor comments will remain a part of the record unless the Contractor revises them.

(3) As required by section 3010 of Pub. L. 111-212, all information posted in FAPIIS on or after April 15, 2011, except past performance reviews, will be publicly available.

(d) Public requests for system information posted prior to April 15, 2011, will be handled under Freedom of Information Act procedures, including, where appropriate, procedures promulgated under E.O. 12600.

(End of clause)

52.211-10 COMMENCEMENT, PROSECUTION, AND COMPLETION OF WORK (APR 1984)

The Contractor shall be required to (a) commence work under this contract within **15** calendar days after the date the Contractor receives the notice to proceed, (b) prosecute the work diligently, and (c) complete the entire work ready for use not later than **as specified on each task order**.* The time stated for completion shall include final cleanup of the premises.

Performance periods are defined on a per task order basis.

(End of clause)

52.211-12 LIQUIDATED DAMAGES--CONSTRUCTION (SEP 2000)

(a) If the Contractor fails to complete the work within the time specified in the contract, the Contractor shall pay liquidated damages to the Government in the amount of **specified on each task order*** for each calendar day of delay until the work is completed or accepted.

(b) If the Government terminates the Contractor's right to proceed, liquidated damages will continue to accrue until the work is completed. These liquidated damages are in addition to excess costs of repurchase under the Termination clause.

Liquidated damages amounts are defined on a per task order basis.

(End of clause)

52.216-18 ORDERING. (OCT 1995)

(a) Any supplies and services to be furnished under this contract shall be ordered by issuance of delivery orders or task orders by the individuals or activities designated in the Schedule. Such orders may be issued from **award date through effective term of the contract**.

(b) All delivery orders or task orders are subject to the terms and conditions of this contract. In the event of conflict between a delivery order or task order and this contract, the contract shall control.

(c) If mailed, a delivery order or task order is considered "issued" when the Government deposits the order in the mail. Orders may be issued orally, by facsimile, or by electronic commerce methods only if authorized in the Schedule.

(End of clause)

52.216-19 ORDER LIMITATIONS. (OCT 1995)

(a) Minimum order. When the Government requires supplies or services covered by this contract in an amount of less than **$2,500**, the Government is not obligated to purchase, nor is the Contractor obligated to furnish, those supplies or services under the contract.

(b) Maximum order. The Contractor is not obligated to honor:

(1) Any order for a single item in excess of **$150,000**;

(2) Any order for a combination of items in excess of **$250,000**; or

(3) A series of orders from the same ordering office within **three (3) days** that together call for quantities exceeding the limitation in subparagraph (1) or (2) above.

(c) If this is a requirements contract (i.e., includes the Requirements clause at subsection 52.216-21 of the Federal Acquisition Regulation (FAR)), the Government is not required to order a part of any one requirement from the Contractor if that requirement exceeds the maximum-order limitations in paragraph (b) above.

(d) Notwithstanding paragraphs (b) and (c) above, the Contractor shall honor any order exceeding the maximum order limitations in paragraph (b), unless that order (or orders) is returned to the ordering office within **two (2) days** after issuance, with written notice stating the Contractor's intent not to ship the item (or items) called for and the reasons. Upon receiving this notice, the Government may acquire the supplies or services from another source.

(End of clause)

52.216-22 INDEFINITE QUANTITY. (OCT 1995)

(a) This is an indefinite-quantity contract for the supplies or services specified, and effective for the period stated, in the Schedule. The quantities of supplies and services specified in the Schedule are estimates only and are not purchased by this contract.

(b) Delivery or performance shall be made only as authorized by orders issued in accordance with the Ordering clause. The Contractor shall furnish to the Government, when and if ordered, the supplies or services specified in the Schedule up to and including the quantity designated in the Schedule as the "maximum". The Government shall order at least the quantity of supplies or services designated in the Schedule as the "minimum".

(c) Except for any limitations on quantities in the Order Limitations clause or in the Schedule, there is no limit on the number of orders that may be issued. The Government may issue orders requiring delivery to multiple destinations or performance at multiple locations.

(d) Any order issued during the effective period of this contract and not completed within that period shall be completed by the Contractor within the time specified in the order. The contract shall govern the Contractor's and Government's rights and obligations with respect to that order to the same extent as if the order were completed during the contract's effective period; provided, that the Contractor shall not be required to make any deliveries under this contract after **the contract completion date**.

(End of clause)

52.217-9 OPTION TO EXTEND THE TERM OF THE CONTRACT (MAR 2000)

(a) The Government may extend the term of this contract by written notice to the Contractor within **thirty (30) days**; provided that the Government gives the Contractor a preliminary written notice of its intent to extend at least **thirty (30) days** days before the contract expires. The preliminary notice does not commit the Government to an extension.

(b) If the Government exercises this option, the extended contract shall be considered to include this option clause.

(c) The total duration of this contract, including the exercise of any options under this clause, shall not exceed **sixty (60) months**.

(End of clause)

52.219-27 NOTICE OF SERVICE-DISABLED VETERAN-OWNED SMALL BUSINESS SET-ASIDE (NOV 2011)

(a) Definition. Service-disabled veteran-owned small business concern--

(1) Means a small business concern--

(i) Not less than 51 percent of which is owned by one or more service-disabled veterans or, in the case of any publicly owned business, not less than 51 percent of the stock of which is owned by one or more service-disabled veterans; and

(ii) The management and daily business operations of which are controlled by one or more service-disabled veterans or, in the case of a service-disabled veteran with permanent and severe disability, the spouse or permanent caregiver of such veteran.

(2) Service-disabled veteran means a veteran, as defined in 38 U.S.C. 101(2), with a disability that is service-connected, as defined in 38 U.S.C. 101(16).

(b) Applicability. This clause applies only to--

(1) Contracts that have been set aside or reserved for service-disabled veteran-owned small business concerns;

(2) Part or parts of a multiple-award contract that have been set aside for service-disabled veteran-owned small business concerns; and

(3) Orders set aside for service-disabled veteran-owned small business concerns under multiple-award contracts as described in
8.405-5 and 16.505(b)(2)(i)(F).

(c) General. (1) Offers are solicited only from service-disabled veteran-owned small business concerns. Offers received from concerns that are not service-disabled veteran-owned small business concerns shall not be considered.

(2) Any award resulting from this solicitation will be made to a service-disabled veteran-owned small business concern.

(d) Agreement. A service-disabled veteran-owned small business concern agrees that in the performance of the contract, in the case of a contract for--

(1) Services (except construction), at least 50 percent of the cost of personnel for contract performance will be spent for employees of the concern or employees of other service-disabled veteran-owned small business concerns;

(2) Supplies (other than acquisition from a nonmanufacturer of the supplies), at least 50 percent of the cost of manufacturing, excluding the cost of materials, will be performed by the concern or other service-disabled veteran-owned small business concerns;

(3) General construction, at least 15 percent of the cost of the contract performance incurred for personnel will be spent on the concern's employees or the employees of other service-disabled veteran-owned small business concerns; or

(4) Construction by special trade contractors, at least 25 percent of the cost of the contract performance incurred for personnel will be spent on the concern's employees or the employees of other service-disabled veteran-owned small business concerns.

(e) A joint venture may be considered a service-disabled veteran owned small business concern if--

(1) At least one member of the joint venture is a service-disabled veteran-owned small business concern, and makes the following representations: That it is a service-disabled veteran-owned small business concern, and that it is a small business concern under the North American Industry Classification Systems (NAICS) code assigned to the procurement;

(2) Each other concern is small under the size standard corresponding to the NAICS code assigned to the procurement; and

(3) The joint venture meets the requirements of paragraph 7 of the explanation of Affiliates in 19.101 of the Federal Acquisition Regulation.

(4) The joint venture meets the requirements of 13 CFR 125.15(b)

(f) Any service-disabled veteran-owned small business concern (nonmanufacturer) must meet the requirements in 19.102(f) of the Federal Acquisition Regulation to receive a benefit under this program.

(End of Clause)

52.223-9 ESTIMATE OF PERCENTAGE OF RECOVERED MATERIAL CONTENT FOR EPA-DESIGNATED ITEMS (MAY 2008)

(a) Definitions. As used in this clause--

Postconsumer material means a material or finished product that has served its intended use and has been discarded for disposal or recovery, having completed its life as a consumer item. Postconsumer material is a part of the broader category of “recovered material.”

Recovered material means waste materials and by-products recovered or diverted from solid waste, but the term does not include those materials and by-products generated from, and commonly reused within, an original manufacturing process.

(b) The Contractor, on completion of this contract, shall--

(1) Estimate the percentage of the total recovered material content for EPA-designated item(s) delivered and/or used in contract performance, including, if applicable, the percentage of post-consumer material content; and

(2) Submit this estimate to:

Naval Facilities Engineering Command Marianas
Capital Improvments
Pedro LG Roberto Drive, Apra Heights
Bldg 4175, 2nd Floor
Santa Rita, Guam 96915

(End of clause)

52.225-11 BUY AMERICAN--CONSTRUCTION MATERIALS UNDER TRADE AGREEMENTS (MAY 2014)

(a) Definitions. As used in this clause--

Caribbean Basin country construction material means a construction material that--

(1) Is wholly the growth, product, or manufacture of a Caribbean Basin country; or

(2) In the case of a construction material that consists in whole or in part of materials from another country, has been substantially transformed in a Caribbean Basin country into a new and different construction material distinct from the materials from which it was transformed.

Commercially available off-the-shelf (COTS) item—

(1) Means any item of supply (including construction material) that is--

(i) A commercial item (as defined in paragraph (1) of the definition at FAR 2.101);

(ii) Sold in substantial quantities in the commercial marketplace; and

(iii) Offered to the Government, under a contract or subcontract at any tier, without modification, in the same form in which it is sold in the commercial marketplace; and

(2) Does not include bulk cargo, as defined in 46 U.S.C. 40102(4)such as agricultural products and petroleum products.

Component means an article, material, or supply incorporated directly into a construction material.

Construction material means an article, material, or supply brought to the construction site by the Contractor or subcontractor for incorporation into the building or work. The term also includes an item brought to the site preassembled from articles, materials, or supplies. However, emergency life safety systems, such as emergency lighting, fire alarm, and audio evacuation systems, that are discrete systems incorporated into a public building or work and that are produced as complete systems, are evaluated as a single and distinct construction material regardless of when or how the individual parts or components of those systems are delivered to the construction site. Materials purchased directly by the Government are supplies, not construction material.

Cost of components means--

(1) For components purchased by the Contractor, the acquisition cost, including transportation costs to the place of incorporation into the construction material (whether or not such costs are paid to a domestic firm), and any applicable duty (whether or not a duty-free entry certificate is issued); or

(2) For components manufactured by the Contractor, all costs associated with the manufacture of the component, including transportation costs as described in paragraph (1) of this definition, plus allocable overhead costs, but excluding profit. Cost of components does not include any costs associated with the manufacture of the construction material.

Designated country means any of the following countries:

(1) A World Trade Organization Government Procurement Agreement country (Armenia, Aruba, Austria, Belgium, Bulgaria, Canada, Croatia, Cyprus, Czech Republic, Denmark, Estonia, Finland, France, Germany, Greece, Hong Kong, Hungary, Iceland, Ireland, Israel, Italy, Japan, Korea (Republic of), Latvia, Liechtenstein, Lithuania,

Luxembourg, Malta, Netherlands, Norway, Poland, Portugal, Romania, Singapore, Slovak Republic, Slovenia, Spain, Sweden, Switzerland, Taiwan or United Kingdom);

(2) A Free Trade Agreement country (Australia, Bahrain, Canada, Chile, Colombia, Costa Rica, Dominican Republic, El Salvador, Guatemala, Honduras, Korea (Republic of), Mexico, Morocco, Nicaragua, Oman, Panama, Peru, or Singapore);

(3) A least developed country (Afghanistan, Angola, Bangladesh, Benin, Bhutan, Burkina Faso, Burundi, Cambodia, Central African Republic, Chad, Comoros, Democratic Republic of Congo, Djibouti, Equatorial Guinea, Eritrea, Ethiopia, Gambia, Guinea, Guinea-Bissau, Haiti, Kiribati, Laos, Lesotho, Liberia, Madagascar, Malawi, Mali, Mauritania, Mozambique, Nepal, Niger, Rwanda, Samoa, Sao Tome and Principe, Senegal, Sierra Leone, Solomon Islands, Somalia, South Sudan, Tanzania, Timor-Leste, Togo, Tuvalu, Uganda, Vanuatu, Yemen, or Zambia); or

(4) A Caribbean Basin country (Antigua and Barbuda, Aruba, Bahamas, Barbados, Belize, Bonaire, British Virgin Islands, Curacao, Dominica, Grenada, Guyana, Haiti, Jamaica, Montserrat, Saba, St. Kitts and Nevis, St. Lucia, St. Vincent and the Grenadines, Sint Eustatius, Sint Maarten, or Trinidad and Tobago).

Designated country construction material means a construction material that is a WTO GPA country construction material, an FTA country construction material, a least developed country construction material, or a Caribbean Basin country construction material.

Domestic construction material means--

(1) An unmanufactured construction material mined or produced in the United States;

(2) A construction material manufactured in the United States, if--

(i) The cost of its components mined, produced, or manufactured in the United States exceeds 50 percent of the cost of all its components. Components of foreign origin of the same class or kind for which nonavailability determinations have been made are treated as domestic; or

(ii) The construction material is a COTS item.

Foreign construction material means a construction material other than a domestic construction material.

Least developed country construction material means a construction material that--

(1) Is wholly the growth, product, or manufacture of a least developed country; or

(2) In the case of a construction material that consists in whole or in part of materials from another country, has been substantially transformed in a least developed country into a new and different construction material distinct from the materials from which it was transformed.

“Free Trade Agreement country construction material” means a construction material that—

(1) Is wholly the growth, product, or manufacture of a Free Trade Agreement (FTA) country; or

(2) In the case of a construction material that consists in whole or in part of materials from another country, has been substantially transformed in a FTA country into a new and different construction material distinct from the materials from which it was transformed.

“Least developed country construction material” means a construction material that—

(1) Is wholly the growth, product, or manufacture of a least developed country; or

(2) In the case of a construction material that consists in whole or in part of materials from another country, has been substantially transformed in a least developed country into a new and different construction material distinct from the materials from which it was transformed.

United States means the 50 States, the District of Columbia, and outlying areas.

WTO GPA country construction material means a construction material that--

(1) Is wholly the growth, product, or manufacture of a WTO GPA country; or

(2) In the case of a construction material that consists in whole or in part of materials from another country, has been substantially transformed in a WTO GPA country into a new and different construction material distinct from the materials from which it was transformed.

(b) Construction materials.

(1) This clause implements 41 U.S.C. chapter 83, Buy American, by providing a preference for domestic construction material. In accordance with 41 U.S.C. 1907, the component test of the Buy American statute is waived for construction material that is a COTS item. (See FAR 12.505(a)(2)). In addition, the Contracting Officer has determined that the WTO GPA and Free Trade Agreements (FTAs) apply to this acquisition. Therefore, the Buy American restrictions are waived for designated country construction materials.

(2) The Contractor shall use only domestic or designated country construction material in performing this contract, except as provided in paragraphs (b)(3) and (b)(4) of this clause.

(3) The requirement in paragraph (b)(2) of this clause does not apply to information technology that is a commercial item or to the construction materials or components listed by the Government as follows:

None.

(4) The Contracting Officer may add other foreign construction material to the list in paragraph (b)(3) of this clause if the Government determines that--

(i) The cost of domestic construction material would be unreasonable. The cost of a particular domestic construction material subject to the restrictions of the Buy American statute is unreasonable when the cost of such material exceeds the cost of foreign material by more than 6 percent;

(ii) The application of the restriction of the Buy American statute to a particular construction material would be impracticable or inconsistent with the public interest; or

(iii) The construction material is not mined, produced, or manufactured in the United States in sufficient and reasonably available commercial quantities of a satisfactory quality.

(c) Request for determination of inapplicability of the Buy American statute.

(1)(i) Any Contractor request to use foreign construction material in accordance with paragraph (b)(4) of this clause shall include adequate information for Government evaluation of the request, including--

(A) A description of the foreign and domestic construction materials;

(B) Unit of measure;

(C) Quantity;

(D) Price;

(E) Time of delivery or availability;

(F) Location of the construction project;

(G) Name and address of the proposed supplier; and

(H) A detailed justification of the reason for use of foreign construction materials cited in accordance with paragraph (b)(3) of this clause.

(ii) A request based on unreasonable cost shall include a reasonable survey of the market and a completed price comparison table in the format in paragraph (d) of this clause.

(iii) The price of construction material shall include all delivery costs to the construction site and any applicable duty (whether or not a duty-free certificate may be issued).

(iv) Any Contractor request for a determination submitted after contract award shall explain why the Contractor could not reasonably foresee the need for such determination and could not have requested the determination before contract award. If the Contractor does not submit a satisfactory explanation, the Contracting Officer need not make a determination.

(2) If the Government determines after contract award that an exception to the Buy American statute applies and the Contracting Officer and the Contractor negotiate adequate consideration, the Contracting Officer will modify the contract to allow use of the foreign construction material. However, when the basis for the exception is the unreasonable price of a domestic construction material, adequate consideration is not less than the differential established in paragraph (b)(4)(i) of this clause.

(3) Unless the Government determines that an exception to the Buy American statute applies, use of foreign construction material is noncompliant with the Buy American statute.

(d) Data. To permit evaluation of requests under paragraph (c) of this clause based on unreasonable cost, the Contractor shall include the following information and any applicable supporting data based on the survey of suppliers:

Foreign and Domestic Construction Materials Price Comparison

Construction material description	Unit of measure	Quantity	Price (dollars) \1\
Item 1:			
Foreign construction material....	.....	.....	.....
Domestic construction material...	.....	.....	.....
Item 2:			
Foreign construction material....	.....	.....	.....
Domestic construction material...	.....	.....	.....

\1\ Include all delivery costs to the construction site and any applicable duty (whether or not a duty-free entry certificate is issued).

List name, address, telephone number, and contact for suppliers surveyed. Attach copy of response; if oral, attach summary.

Include other applicable supporting information.

(End of clause)

52.236-1 PERFORMANCE OF WORK BY THE CONTRACTOR (APR 1984)

The Contractor shall perform on the site, and with its own organization, work equivalent to at least **fifteen percent (15%)** of the total amount of work to be performed under the contract. This percentage may be reduced by a supplemental agreement to this contract if, during performing the work, the Contractor requests a reduction and the Contracting Officer determines that the reduction would be to the advantage of the Government.

(End of clause)

52.236-4 PHYSICAL DATA (APR 1984)

Data and information furnished or referred to below is for the Contractor's information. The Government shall not be responsible for any interpretation of or conclusion drawn from the data or information by the Contractor.

(a) The indications of physical conditions on the drawings and in the specifications are the result of site investigations by . . . . . **to be determined on a per task order basis**.

(b) Weather conditions . . . . . **to be determined on a per task order basis**.

(c) Transportation facilities . . . . . **to be determined on a per task order basis**.

(d) Other pertinent information. . . . . **to be determined on a per task order basis**.

(End of clause)

52.252-2 CLAUSES INCORPORATED BY REFERENCE (FEB 1998)

This contract incorporates one or more clauses by reference, with the same force and effect as if they were given in full text. Upon request, the Contracting Officer will make their full text available. Also, the full text of a clause may be accessed electronically at this/these address(es):

http://farsite.hill.af.mil
http://farsite.hill.af.mil/vffara.htm
http://farsite.hill.af.mil/vfdfara.htm

(End of clause)

52.252-6 AUTHORIZED DEVIATIONS IN CLAUSES (APR 1984)

(a) The use in this solicitation or contract of any Federal Acquisition Regulation (48 CFR Chapter 1) clause with an authorized deviation is indicated by the addition of "(DEVIATION)" after the date of the clause.

(End of clause)

252.222-7000 RESTRICTIONS ON EMPLOYMENT OF PERSONNEL (MAR 2000)

(a) The Contractor shall employ, for the purpose of performing that portion of the contract work in **Guam**, individuals who are residents thereof and who, in the case of any craft or trade, possess or would be able to acquire promptly the necessary skills to perform the contract.

(b) The Contractor shall insert the substance of this clause, including this paragraph (b), in each subcontract awarded under this contract.

(End of clause)

252.232-7006 WIDE AREA WORKFLOW PAYMENT INSTRUCTIONS (MAY 2013)

(a) Definitions. As used in this clause--

Department of Defense Activity Address Code (DoDAAC) is a six position code that uniquely identifies a unit, activity, or organization.

Document type means the type of payment request or receiving report available for creation in Wide Area WorkFlow (WAWF).

Local processing office (LPO) is the office responsible for payment certification when payment certification is done external to the entitlement system.

(b) Electronic invoicing. The WAWF system is the method to electronically process vendor payment requests and receiving reports, as authorized by DFARS 252.232-7003, Electronic Submission of Payment Requests and Receiving Reports.

(c) WAWF access. To access WAWF, the Contractor shall--

(1) Have a designated electronic business point of contact in the System for Award Management at https://www.acquisition.gov; and

(2) Be registered to use WAWF at https://wawf.eb.mil/ following the step-by-step procedures for self-registration available at this Web site.

(d) WAWF training. The Contractor should follow the training instructions of the WAWF Web-Based Training Course and use the Practice Training Site before submitting payment requests through WAWF. Both can be accessed by selecting the “Web Based Training” link on the WAWF home page at https://wawf.eb.mil/.

(e) WAWF methods of document submission. Document submissions may be via Web entry, Electronic Data Interchange, or File Transfer Protocol.

(f) WAWF payment instructions. The Contractor must use the following information when submitting payment requests and receiving reports in WAWF for this contract/order:

To be determined per task order.

(1) Document type. The Contractor shall use the following document type(s).

Navy Construction/Facilities Management Invoice

(Contracting Officer: Insert applicable document type(s). Note: If a “Combo” document type is identified but not supportable by the Contractor's business systems, an “Invoice” (stand-alone) and “Receiving Report” (stand-alone) document type may be used instead.)

(2) Inspection/acceptance location. The Contractor shall select the following inspection/acceptance location(s) in WAWF, as specified by the contracting officer.

To be determined per task order.

(3) Document routing. The Contractor shall use the information in the Routing Data Table below only to fill in applicable fields in WAWF when creating payment requests and receiving reports in the system.

Routing Data Table*

Field Name in WAWF	Data to be entered in WAWF
Pay Official DoDAAC	____
Issue By DoDAAC	____
Admin DoDAAC	____
Inspect By DoDAAC	____
Ship To Code	____
Ship From Code	____
Mark For Code	____
Service Approver (DoDAAC)	____
Service Acceptor (DoDAAC)	____
Accept at Other DoDAAC	____
LPO DoDAAC	____
DCAA Auditor DoDAAC	____
Other DoDAAC(s)	____

*__To be determined per task order.__

(4) Payment request and supporting documentation. The Contractor shall ensure a payment request includes appropriate contract line item and subline item descriptions of the work performed or supplies delivered, unit price/cost per unit, fee (if applicable), and all relevant back-up documentation, as defined in DFARS Appendix F, (e.g. timesheets) in support of each payment request.

(5) WAWF email notifications. The Contractor shall enter the email address identified below in the “Send Additional Email Notifications” field of WAWF once a document is submitted in the system.

To be determined per task order.

(g) WAWF point of contact. (1) The Contractor may obtain clarification regarding invoicing in WAWF from the following contracting activity's WAWF point of contact.

Christopher Santos, NAVFAC Marianas, email at christopher.santos@fe.navy.mil

(2) For technical WAWF help, contact the WAWF helpdesk at 866-618-5988.

(End of clause)

252.236-7001 CONTRACT DRAWINGS AND SPECIFICATIONS (AUG 2000)

(a) The Government will provide to the Contractor, without charge, one set of contract drawings and specifications, except publications incorporated into the technical provisions by reference, in electronic or paper media as chosen by the Contracting Officer.

(b) The Contractor shall--

(1) Check all drawings furnished immediately upon receipt;

(2) Compare all drawings and verify the figures before laying out the work;

(3) Promptly notify the Contracting Officer of any discrepancies;

(4) Be responsible for any errors that might have been avoided by complying with this paragraph (b); and

(5) Reproduce and print contract drawings and specifications as needed.

(c) In general--

(1) Large-scale drawings shall govern small-scale drawings; and

(2) The Contractor shall follow figures marked on drawings in preference to scale measurements.

(d) Omissions from the drawings or specifications or the misdescription of details of work that are manifestly necessary to carry out the intent of the drawings and specifications, or that are customarily performed, shall not relieve the Contractor from performing such omitted or misdescribed details of the work. The Contractor shall perform such details as if fully and correctly set forth and described in the drawings and specifications.

(e) The work shall conform to the specifications and the contract drawings identified on the following index of drawings:

To be identified on a per task order basis.

(End of clause)

252.247-7023 TRANSPORTATION OF SUPPLIES BY SEA (APR 2014)

(a) Definitions. As used in this clause --

"Components" means articles, materials, and supplies incorporated directly into end products at any level of manufacture, fabrication, or assembly by the Contractor or any subcontractor.

"Department of Defense" (DoD) means the Army, Navy, Air Force, Marine Corps, and defense agencies.

"Foreign-flag vessel" means any vessel that is not a U.S.-flag vessel.

"Ocean transportation" means any transportation aboard a ship, vessel, boat, barge, or ferry through international waters.

"Subcontractor" means a supplier, materialman, distributor, or vendor at any level below the prime contractor whose contractual obligation to perform results from, or is conditioned upon, award of the prime contract and who is performing any part of the work or other requirement of the prime contract.

"Supplies" means all property, except land and interests in land, that is clearly identifiable for eventual use by or owned by the DoD at the time of transportation by sea.

(i) An item is clearly identifiable for eventual use by the DoD if, for example, the contract documentation contains a reference to a DoD contract number or a military destination.

(ii) "Supplies" includes (but is not limited to) public works; buildings and facilities; ships; floating equipment and vessels of every character, type, and description, with parts, subassemblies, accessories, and equipment; machine tools; material; equipment; stores of all kinds; end items; construction materials; and components of the foregoing.

"U.S.-flag vessel" means a vessel of the United States or belonging to the United States, including any vessel registered or having national status under the laws of the United States.

(b)(1) The Contractor shall use U.S.-flag vessels when transporting any supplies by sea under this contract.

(2) A subcontractor transporting supplies by sea under this contract shall use U.S.-flag vessels if--

(i) This contract is a construction contract; or

(ii) The supplies being transported are--

(A) Noncommercial items; or

(B) Commercial items that--

(1) The Contractor is reselling or distributing to the Government without adding value (generally, the Contractor does not add value to items that it contracts for f.o.b. destination shipment);

(2) Are shipped in direct support of U.S. military contingency operations, exercises, or forces deployed in humanitarian or peacekeeping operations; or

(3) Are commissary or exchange cargoes transported outside of the Defense Transportation System in accordance with 10 U.S.C. 2643.

(c) The Contractor and its subcontractors may request that the Contracting Officer authorize shipment in foreign-flag vessels, or designate available U.S.-flag vessels, if the Contractor or a subcontractor believes that --

(1) U.S.-flag vessels are not available for timely shipment;

(2) The freight charges are inordinately excessive or unreasonable; or

(3) Freight charges are higher than charges to private persons for transportation of like goods.

(d) The Contractor must submit any request for use of foreign-flag vessels in writing to the Contracting Officer at least 45 days prior to the sailing date necessary to meet its delivery schedules. The Contracting Officer will process requests submitted after such date(s) as expeditiously as possible, but the Contracting Officer's failure to grant approvals to meet the shipper's sailing date will not of itself constitute a compensable delay under this or any other clause of this contract. Requests shall contain at a minimum --

(1) Type, weight, and cube of cargo;

(2) Required shipping date;

(3) Special handling and discharge requirements;

(4) Loading and discharge points;

(5) Name of shipper and consignee;

(6) Prime contract number; and

(7) A documented description of efforts made to secure U.S.-flag vessels, including points of contact (with names and telephone numbers) with at least two U.S.-flag carriers contacted. Copies of telephone notes, telegraphic and facsimile message or letters will be sufficient for this purpose.

(e) The Contractor shall, within 30 days after each shipment covered by this clause, provide the Contracting Officer and the Maritime Administration, Office of Cargo Preference, U.S. Department of Transportation, 400 Seventh Street SW., Washington, DC 20590, one copy of the rated on board vessel operating carrier's ocean bill of lading, which shall contain the following information:

(1) Prime contract number;

(2) Name of vessel;

(3) Vessel flag of registry;

(4) Date of loading;

(5) Port of loading;

(6) Port of final discharge;

(7) Description of commodity;

(8) Gross weight in pounds and cubic feet if available;

(9) Total ocean freight in U.S. dollars; and

(10) Name of the steamship company.

(f) If this contract exceeds the simplified acquisition threshold, the Contractor shall provide with its final invoice under this contract a representation that to the best of its knowledge and belief--

(1) No ocean transportation was used in the performance of this contract;

(2) Ocean transportation was used and only U.S.-flag vessels were used for all ocean shipments under the contract;

(3) Ocean transportation was used, and the Contractor had the written consent of the Contracting Officer for all foreign-flag ocean transportation; or

(4) Ocean transportation was used and some or all of the shipments were made on foreign-flag vessels without the written consent of the Contracting Officer. The Contractor shall describe these shipments in the following format:

ITEM DESCRIPTION	CONTRACT LINE ITEMS	QUANTITY
TOTAL		

(g) If this contract exceeds the simplified acquisition threshold and the final invoice does not include the required representation, the Government will reject and return it to the Contractor as an improper invoice for the purposes of the Prompt Payment clause of this contract. In the event there has been unauthorized use of foreign-flag vessels in the performance of this contract, the Contracting Officer is entitled to equitably adjust the contract, based on the unauthorized use.

(h) In the award of subcontracts for the types of supplies described in paragraph (b)(2) of this clause, including subcontracts for commercial items, the Contractor shall flow down the requirements of this clause as follows:

(1) The Contractor shall insert the substance of this clause, including this paragraph (h), in subcontracts that exceed the simplified acquisition threshold in part 2 of the Federal Acquisition Regulation.

(2) The Contractor shall insert the substance of paragraphs (a) through (e) of this clause, and this paragraph (h), in subcontracts that are at or below the simplified acquisition threshold in part 2 of the Federal Acquisition Regulation.

(End of clause)

5252.201-9300 CONTRACTING OFFICER AUTHORITY (JUN 1994)

In no event shall any understanding or agreement between the Contractor and any Government employee other than the Contracting Officer on any contract, modification, change order, letter or verbal direction to the Contractor be effective or binding upon the Government. All such actions must be formalized by a proper contractual document executed by an appointed Contracting Officer. The Contractor is hereby put on notice that in the event a Government employee other than the Contracting Officer directs a change in the work to be performed or increases the scope of the work to be performed, it is the Contractor's responsibility to make inquiry of the Contracting Officer before making the deviation. Payments will not be made without being authorized by an appointed Contracting Officer with the legal authority to bind the Government. (End of clause)

(End of clause)

5252.209-9300 Organizational Conflicts of Interest (Jun 1994)

The restrictions described herein shall apply to the Contractor and its affiliates, consultants and subcontracts under this contract. If the Contractor under this contract prepares or assists in preparing a statement of work, specifications and plans, the Contractor and its affiliates shall be ineligible to bid or participate, in any capacity, in any contractual effort which is based on such statement of work or specifications and plans as a prime contractor, subcontractor, consultant or in any similar capacity. The Contractor shall not incorporate its products or services in such statement of work or specification unless so directed in writing by the Contracting Officer, in which case the restriction shall not apply. This contract shall include this clause in its subcontractor's or consultants' agreements concerning the performance of this contract.

(End of clause)

5252.216-9300 APPOINTMENT OF ORDERING OFFICER(S) (OCT 1996)

Ordering Officers under this contract are authorized by the Contracting Officer to execute delivery/task orders provided the total price for the delivery/task order does not exceed the individual Contracting Officer(s) warrant limitations. The ordering officers and their specific authority shall be stated in this contract or in an appointment letter.

(End of clause)

5252.216-9306 PROCEDURES FOR ISSUING ORDERS (MAR 2002)

(a) Services to be furnished under this contract shall be furnished at such times as ordered by the issuance of task orders on DD Form 1155 by the Ordering Officer designated by the Contracting Officer. All orders issued hereunder are subject to the terms and conditions of this contract. This contract shall control in the event of conflict with any orderA task order will be considered "issued" for the purpose of this contract at the time the Government deposits the order in the mail or, if transmitted by other means, when physically delivered to the Contractor.

(b) Except in emergency situations, only a Contracting Officer may modify task/delivery orders.. An Ordering Officer, when authorized by the designation official (Contracting Officer), may issue modifications to task/delivery orders only during an emergency. Modifications to task/delivery orders will be issued on a Standard Form (SF 30).

Task orders may be modified orally by the Ordering Officer in emergency circumstances. Oral modifications will be confirmed in writing by issuance of a SF 30 within two (2) working days from the time the oral direction is issued.

(End of clause)

5252.228-9305 NOTICE OF BONDING REQUIREMENTS (DEC 2000)

(a) Within **ten (10)** days after receipt of award, the bidder/offeror to whom the award is made shall furnish the following bond(s) each with satisfactory security:

X A Performance Bond (Standard Form 25). The performance bond shall be in a penal sum equal to 100% of **each task order price**.

X A Payment Bond (Standard Form 25A). The payment bond shall be in a penal sum equal to 100% of **each task order price**.

(b) Any surety company holding a certificate of authority from the Secretary of Treasury as an acceptable Surety on Federal bonds will be accepted. Individual sureties will be permitted as prescribed in FAR 28.203 and FAC 5252.228-9300. Alternative types of security in lieu of furnishing sureties on performance and/or payment bonds will be permitted as prescribed in FAR 28.204, and will be held for at least one year after the completion of the contract. Additional bond security may be required as prescribed in FAR 52.228-2. Bonds shall be accompanied by a document authenticating the agent’s authority to sign bonds for the surety company.

(c) The contract time for purposes of fixing the completion date, default, and liquidated damages shall begin to run **from the date of award**, regardless of when performance and payment bonds or deposits in lieu of surety are executed.

(End of clause)

5252.236-9301 SPECIAL WORKING CONDITIONS AND ENTRY TO WORK AREA (OCT 2004)

The Government under certain circumstances may require denial of entry to the work areas under this contract where the Contractor's work or presence would constitute a safety or security hazard to ordnance storage or handling operations. Restrictions covering entry to and availability of the work areas are as follows:

(a) Entry. Entry to work areas located within the special Security Limited areas, defined as those work areas located within the existing security fence, can be granted subject to special personnel requirements as specified herein and to other normal security and safety requirements. Complete denial of entry to the Limited Area may be required during brief periods of one to two hours (normally) and on rare occasions of two to four hours. For bidding purposes, the Contractor shall assume denial of entry to the work areas in the Limited Area of six 2 hour denials and one 4 hour denial per month.

(b) Vehicle Delay. The Contractor shall also assume for bidding purposes that, in addition to site denial, each vehicle and/or unit of construction equipment will be delayed during each movement through the security gate, both entering and leaving the limited area. Delays will average **ten (10) minutes**.

(c) Operational Considerations. To reduce delay time while preserving required security, the following points should be considered in operational planning:

(1) Vehicle Search. Security regulations required that all vehicles, when authorized to enter the Limited Area be thoroughly searched by guard force personnel. Such a search will be required for all vehicle/ construction equipment. Accordingly, once a vehicle or unit of construction equipment has been cleared, it may be left in the Limited Area after initial entry has been made. For the period of time authorized the vehicle/equipment left in the Limited Area will be assigned parking areas by the Contracting Officer. The vehicle/equipment must be secured as specified in paragraph entitled "SECURITY REQUIREMENTS." The intent is to reduce the Contractor loss of time at the security gate. No private vehicles will be allowed to enter the Limited Area.

(2) Delivery Vehicles. Guard force personnel will inspect vehicles delivering construction materials while the driver is being processed for entry into the Limited Area. A Security Escort will then escort the driver and vehicle in the Limited Area. To provide this service, delivery schedules should be promulgated in advance and vendors made aware that a reasonable delay can be expected if delivery is other than the time specified. Deliveries after 1600 hours will not be allowed entry into the Limited Area without prior approval of the Physical Security Officer.

(End of clause)

5252.236-9303 ACCIDENT PREVENTION (NOV 1998)

(a) The Contractor will maintain an accurate record of, and will report to the Contracting Officer in the manner and on the forms prescribed by the Contracting Officer, all accidents resulting in death, traumatic injury, occupational disease, and damage to property, materials, supplies and equipment incident to work performed under this contract.

(b) Compliance with the provisions of this article by subcontractors will be the responsibility of the Contractor.

(c) Prior to commencement of the work, the Contractor may be required to:

(1) submit in writing his proposals for effectuating provision for accident prevention;

(2) meet in conference with representatives of the Contracting Officer to discuss and develop mutual understandings relative to administration of the overall safety program.

(End of clause)

5252.236-9304 UTILITIES FOR CONSTRUCTION AND TESTING (JUN 1994)

The Contractor shall be responsible for obtaining, either from available Government sources or local utility companies, all utilities required for construction and testing. The Contractor shall provide these utilities at his expense, paid for at the current utility rate delivered to the job site. The Contractor shall provide and maintain all temporary utility connections and distribution lines, and all meters required to measure the amount of each utility used.

(End of clause)

5252.242-9300 GOVERNMENT REPRESENTATIVES (OCT 1996)

(a) The contract will be administered by an authorized representative of the Contracting Officer. In no event, however, will any understanding or agreement, modification, change order, or other matter deviating from the terms of the contract between the Contractor and any person other than the Contracting Officer be effective or binding upon the Government, unless formalized by proper contractual documents executed by the Contracting Officer prior to completion of this contract. The authorized representative as indicated hereinafter:

__**X**__(1) The Contracting Officer's Representative (COR) will be designated by the Contracting Officer as the authorized representative of the Contracting Officer. The COR is responsible for monitoring performance and the technical management of the effort required hereunder, and should be contacted regarding questions or problems of a technical nature.

__**X**__(2) The designated Contract Specialist will be the Administrative Contracting Officer's representative on all other contract administrative matters. The Contract Specialist should be contacted regarding all matters pertaining to the contract or task/delivery orders.

____(3) The designated Property Administrator is the Administrative Contracting Officer's representative on property matters. The Property Administrator should be contacted regarding all matters pertaining to property administration.

(End of clause)

5252.245-9302 LIMITED ASSUMPTION OF RISK BY GOVERNMENT (JUN 1994)

(a) Title of all work in place shall be in the Government, and title to all property intended for incorporation in the work shall vest in the Government upon delivery thereof to the site of the work. The term "Government-owned property" as used in this clause refers to such work in place and to such other property as to which title has vested in the Government and includes any property furnished or rented to the Contractor by the Government. Upon completion of the work, any such Government-owned property not a part of the work (except property rented to, or furnished without charge to the Contractor by the Government) shall become the property of the Contractor. The vesting of title in the Government, as provided in this paragraph, shall in no way relieve the Contractor of any obligations otherwise provided in this contract in respect to such Government-owned property except as expressly stated in paragraph (b) of this clause.

(b) The Contractor represents that the contract price does not include the cost of insurance, nor any provision for a reserve, covering the risk assumed by the Government under this paragraph. The Government assumes the risk of loss or damage to such Government-owned property (including expenses incidental to such loss or damage) which results directly or indirectly from the explosion of Government-owned or controlled munitions (including, without limitations, ammunition, bombs, powder, dynamite and other explosives), whether or not caused by negligence, except that the Government does not assume at any time the risk of, and the Contractor shall be responsible for, such loss or damage (1) which is in fact covered by insurance or for which Contractor is otherwise reimbursed, or (2) which results from disregard of proper instructions of the Contracting Officer, on the part of any

of the Contractor's directors, officers or any other representatives having supervision or direction of all or substantially all the Contractor's operations under this contract.

(c) In the event of loss or damage to Government-owned property resulting from the risk assumed by the Government hereunder, the Contracting Officer shall determine whether, and to what extent, such property shall be rebuilt, repaired or replaced by the Contractor or otherwise. Should this determination cause an increase or decrease in the cost of doing the work under this contract or time required for its performance, an equitable adjustment shall be made as provided in the changes clause of the contract.

(d) The provisions contained in the statement of work under "Permits and Responsibilities," are to be deemed modified by this clause only to the extent required to give effect to the limited assumption of risk provided in this clause.

(End of clause)

SECTION 00800

SPECIAL CONTRACT REQUIREMENTS
LABOR INFORMATION

1. CONTRACT WORK HOURS AND SAFETY STANDARDS ACT

With the exception of Defense Policy Review Initiative (DPRI) projects, construction contracts in Guam are subject to the Contract Work Hours and Safety Standards Act, but are not subject to Davis-Bacon Act and therefore, the following FAR clauses shall be modified to reflect this applicability and included in this contract.

a. FAR 52.222-11, Subcontracts (Labor Standards), except that the list of applicable clauses in paragraph b shall be modified to refer only to the clauses: Contract Work Hours and Safety Standards Act-Overtime Compensation, Subcontracts (Labor Standards), and Contract Termination-Debarment, Disputes Concerning Labor Standards.

b. FAR 52.222-12, Contract Termination-Debarment, except that the list of applicable clauses in the first sentence shall be modified to refer only to the Contract Work Hours and Safety Standards Act-Overtime Compensation, Subcontracts (Labor Standards).

2. NOTICE CONCERNING LABOR RATES

a. Davis-Bacon Act does not apply to this project.

b. Offerors maintain the responsibility to comply with the Government of Guam's Labor Certification process and current prevailing wage rates, as applicable. The notice for prevailing wage rates for construction is attached as Attachment (3) and provided for information only.

c. Inquiries should be directed to the Department of Labor, Government of Guam, Wage and Hour Division, P.O. Box 9970, Tamuning, Guam 96931-9970, telephone 671-300-4582.

SECTION 00801

SPECIAL CONTRACT REQUIREMENTS
CONTRACT TYPE/PERFORMANCE

1. GENERAL OVERVIEW

This is a construction procurement issued as a competitive Service Disabled Veteran-Owned Small Business (SDVOSB) set-aside and intended to result in **single award** of an IDIQ contract. The Government will select the responsible offeror submitting the lowest priced technically acceptable (LPTA) proposal. Tradeoffs will not be used. Offerors will be advised that the award may be made without discussions, exchanges, or any clarifications concerning the proposals received. However, the Government reserves the right to clarify certain aspects of proposals and conduct discussions if determined necessary by the Contracting Officer.

2. CONTRACT TYPE

This is an Indefinite Delivery/Indefinite Quantity (IDIQ) contract with pre-established fixed contract prices. The actual amount of work to be performed and the time of such performance will be determined by a Contracting Officer, who will issue written task orders to the Contractor. Award of task orders will be on a firm fixed price basis. This is not a requirements contract.

3. SET-ASIDE: This contract is 100% set-aside for Service Disabled Veteran-Owned Small Business (SDVOSB) concerns.

4. NAICS CODE: 238320; Size standard of $15 Million applies to this specialty trade construction contract.

5. DESCRIPTION OF WORK

The work to be acquired under this contract is for all labor, safety controls, transportation, materials, equipment and supervision necessary to perform surface preparation on previously painted and unpainted buildings, application of new paint, taping and spackling work, replacement of caulking and puttying, repair of flashings/sheet-metal, repair of concrete cracks and spalls, cutting/trimming of trees and shrubs (obstructing performance of work), painting of pavement markings, and incidental related work at various Federal Government installations and buildings on Guam under the cognizance on the Naval Facilities Engineering Command Marianas.

6. CONTRACT DURATION, LIMITS, AND AMOUNTS

a. Term of contract: The resulting contract will have a base period of 12 months. However, this time period may be reduced if the Contracting Officer determines that the estimated contract amount ordered by the Government has been reached (see paragraph c. below).

b. Options: The contract contains four (4) 12-month options for a total maximum duration of 60 months or estimated dollar value (see paragraph c. below), whichever occurs first. The Government has the option to extend the term of the contract in accordance with the contract clause entitled "Option to Extend the Term of the Contract, FAR 52.217-9". The Government may extend their contract by written notice to the Contractor within thirty (30) days, provided that the Government will give the Contractor a preliminary written notice of its intent to extend within thirty (30) days before the contract expires. The preliminary notice does not commit the Government to an extension.

c. Amounts: The maximum dollar value, including the base period and all options is not to exceed $30,000,000. The estimated dollar value for each period is $6,000,000.

d. Estimated Amounts: The contract provides for an estimated dollar value for each period. For each period, any remaining unused amounts in the estimated dollar value may be carried over to the next option period provided the overall maximum dollar value of $30,000,000 is not exceeded in the contract.

e. Task Order Limitations: Task orders will range between $2,500 and $150,000. Task orders may fall below or above this limit; however under the general terms of the contract, contractor is not obligated to accept task orders as follows: Contractor is not obligated to honor (1) any order for a single item in excess of $150,000; (2) any order for a combination of items in excess of $250,000; or (3) a series of orders from the same ordering office within 3 days that together call for quantities exceeding the limitation in excess of $250,000. A task order may be issued in an amount less than the minimum order amount of $2,500 when it is determined by the Government as necessary to expend the minimum guarantee.

f. Minimum Guarantee: The Government makes no representation as to the number of task orders or actual amount of work to be ordered. The minimum guarantee of $10,000 applies to the base period only. The contractor is not guaranteed work in excess of the minimum guarantee specified herein.

7. COMMENCEMENT OF WORK

The work shall commence within fifteen (15) days after award of the base period.

8. PLACE OF PERFORMANCE

The place of performance will be designated on each individual task order.

9. PROPOSAL PREPARATION COSTS

The costs for preparation of task order proposals, if required under this contract, shall be the responsibility of the contractor and not directly reimbursable. Each task order awarded will include at a minimum all labor wages, management, supervision, mobilization, material and equipment costs. The contractor shall furnish all project management, planning, estimating, labor, transportation, materials, equipment, tools, supervision, design if applicable, and all other associated costs necessary to fulfill the requirements of the task order.

10. PERFORMANCE AND PAYMENT BONDS

Performance and payment bonds shall be in the form of firm commitment, supported by corporate sureties whose names appear on the list contained in the Treasury Department Circular 570, in the amount of 100% will be required for each task order and shall be submitted for approval to the Contracting Officer within 10 days (unless otherwise stipulated on the individual task order) of award of a task order. Commencement of construction is contingent upon approval of required bonds and issuance of a notice to proceed (NTP).

11. REQUIRED INSURANCE

a. Within fifteen days after award of this contract, the contractor shall furnish the Administrative Contracting Officer a Certificate of Insurance as evidence of the existence of the following insurance coverage amounts not less than the amount specified below in accordance with FAR Clause 52.228-5, Insurance – Work On A Government Installation.

COVERAGE:
Comprehensive General Liability: $500,000 per occurrence

Automobile Liability: $200,000 per person, $500,000 per occurrence for bodily injury; $20,000 per occurrence for property damage

Workmen's Compensation: As required by Federal and State Worker's compensation and occupational disease laws

Employer's Liability Coverage: $100,000, except in states where worker's compensation may not be written by private carriers

Others as required by state law.

b. The Certificate of Insurance shall provide for thirty (30) days written notice to the Contracting Officer by the insurance company prior to cancellation or material change in policy coverage. Other requirements and information are contained in the aforementioned "Insurance" clause.

12. TASK ORDER PERFORMANCE PERIOD

In accordance with FAR Clause 52.211-10, Commencement, Prosecution, and Completion of Work, contractor is required to complete all task order work based on the following performance schedule unless otherwise directed. The Government reserves the right to negotiate a task order's performance period if determined to be in the best interest of the Government.

Task Order Amount	Performance Period
$2,500 to $25,000	15-30 calendar days
$25,001 to $50,000	30-45 calendar days
$50,001 to $100,000	45-90 calendar days
$100,001 to $150,000	90-120 calendar days
$150,001 or greater	120+ calendar days

13. SITE VISIT

Upon receipt of the scope of work, including applicable drawings, and following a brief time period for reviewing the documents, the Contractor shall inspect the job site. Any deficiencies, conflicts, or other areas of concern existing in the scope of work and applicable drawings should be brought to the attention of the Contracting Officer, in writing. The contractor shall also notify the Contracting Officer, in writing, upon observing any features in the scope of work or project that appear to be ambiguous, confusing, conflicting or erroneous. Ten (10) or more failures to attend site visits may be reason for the Government's determination not to exercise the Contractor's option periods.

14. SUPERVISION

For each task order, the contractor shall provide supervision in accordance with FAR Clause 52.236-6, Superintendence by the Contractor. In addition to the required supervision, the contractor shall provide for a Quality Control (QC) manager for each task order issued under the contract. No construction work or testing may be performed unless the QC manager is on the work site; however, construction work may continue if the QC manager is conducting QC related work for the specific task order on base installations. In situations where more than one project location is designated in the task order, construction work may continue at a worksite if the QC manager is present at another one of the task order's related worksite. Unless otherwise specified in the RFPL, for projects requiring Level 4 competency or higher, the Site Safety and Health Officer (SSHO) shall have no other duties other than safety and occupational health management, inspections, and enforcement on that project. For all other projects, the SSHO may be a collateral duty of either the superintendent, QC manager, or other designated employee. In no case, however, will all three functions (superintendent, QC, and SSHO) be assigned to the same individual.

15. SUBCONTRACTING RESPONSIBILITIES

The contractor shall be responsible for the management and performance of all subcontractors. The contractor shall ensure subcontractors are competent and capable of handling all assigned work. The contractor shall ensure task orders are completed within the stated requirements.

The contractor is responsible for ensuring subcontracting opportunities are made available to all small business, veteran-owned small business, service-disabled veteran-owned small business, HUBZone small business, small disadvantaged small business and women-owned small businesses.

16. NOTICE OF CONSTRUCTIVE CHANGES

No order, statement or direction of the Contracting Officer, an authorized representative of the Contracting Officer whether or not acting within the limits of his authority, or any other representative of the Government, shall constitute a change order under the "Changes" clause of this contract or entitle the contractor(s) to an equitable adjustment of the price or delivery schedule, unless such a change is issued in writing and signed by the Contracting Officer.

17. PAYMENTS

Designated paying office will be determined upon award of individual task orders under this contract. Invoicing procedures will be as stated in Section 01 20 00.05 20 Price and Payment Procedures for Design-Build. Percentage of performance payments will be processed through the designated Administrative Contracting Officer. Invoices shall be submitted to the office identified in block 6 of the DD1155.

18. PRE-CONSTRUCTION MEETING

Prior to commencing work under a task order, the contractor shall meet with the Contracting Officer and/or designated technical personnel at a mutually agreeable time to discuss and develop mutual understandings concerning schedule and administering work.

19. PARTNERING

Partnering is a structured process, as well as philosophy of doing business with contractors and clients that recognizes common goals through communication and teamwork. It helps create an environment where trust and teamwork prevent disputes, foster good working relationships to everyone's benefit, and facilitate the completion of a successful contract. In support of the command's goals of teamwork and client satisfaction, our policy is to practice philosophy of Partnering on every contract we administer.

Level C (Recommended for projects valued less than $3M)
This level of partnering discusses partnering concepts and benefits. It should become a part of the preconstruction conference. The senior ROICC and senior Contractor persons present will lead the discussion. Brief follow-on sessions should be held, as needed, to discuss issues relevant to the execution of the project, to resolve problems that have surfaced since the last session, and to discuss Contractor performance.

20. PERFORMANCE EVALUATIONS

The Administrative Contract Office will complete a contractor's performance evaluation for input into CCASS/ACASS database. The evaluation will take into account all aspects of the contractor's performance. Interim performance evaluations may be completed at any time the Contractor's performance is considered less than satisfactory or to provide feedback on the design portion of a design-build task order. Contractors will be provided a copy of the performance evaluation and an opportunity to discuss the evaluation. The negative performance evaluations will have an impact on the award of future task orders.

21. CONSOLIDATED SCHEDULES

In addition to the requirements for a network analysis schedule for each task order, the contractor shall provide a separate, single consolidated schedule for all task orders it is issued under the contract. This consolidated schedule shall be updated and provided to the Contracting Officer on the first day of each month; and shall incorporate significant milestones and related information for each task order. Required information in the consolidated schedule will be provided as directed by the Contracting Officer and includes, but is not limited to, task order award date and amount, description, estimated completion date, contract completion date, percentage of completion, pending issues, and total contract amount. This consolidated schedule is a tool to manage the contract and will be used to measure progress and to evaluate potential impact on the performance of future task orders. The Contractor remains responsible for providing detailed, current, accurate and complete information in the consolidated schedules.

22. POTENTIAL TASK ORDERS

The contractor's progress on ongoing task orders will be measured using the consolidated schedule required in paragraph 21. Contractor must prosecute the work or any separable part, with the diligence that will ensure completion within the time specified in the task orders. The Government reserves the right to not award a contractor new task orders if the contractor fails to prosecute the work on any outstanding task orders of any such action.

SECTION 00803

TASK ORDER ISSUANCE PROCEDURES

1. GENERAL

a. When the Government requires work under the contract, a Request for Proposal Letter (RFPL) will be issued as appropriate. RFPLs are normally accompanied by a Statement of Work (SOW) with a list of proposed work items (priced per Bid Schedule) and estimated quantities for the proposed Task Order (TO). The contractor shall promptly meet with the Government and jointly measure and confirm the work items, quantities, and performance period. Any discrepancies between the Government's and Contractor's proposed work items, quantities, and performance period shall be resolved before a Task Order is issued.

b. RFPLs will normally be issued electronically by email but may be placed via mail, telephone, facsimile or other electronic means.

c. Task orders will be awarded on DD Form 1155 (Order for Supplies or Services). Task orders will be placed in a sequential numbering system, which relate back to the basic contract number and the assigned Work Order (WO) number.

d. The Government will not be obligated to reimburse the contractor for work performed, items delivered, or any costs incurred, nor shall the contractor be obligated to perform, deliver, or otherwise incur costs except as authorized by duly executed task orders.

e. Each task order shall include as a minimum:

(1) Date of order
(2) Contract number and order number
(3) Contract item number and description, quantity, and unit price or estimated cost
(4) Delivery or performance schedule
(5) Place of performance
(6) Any packaging, packing, and shipping instructions
(7) Accounting and appropriation data
(8) Method of payment and payment office

f. Modifications to task orders will be issued on Standard Form (SF) 30.

g. In accordance with FAR 16.505(a) (9), no protest under Subpart 33.1 is authorized in connection with the issuance or proposed issuance of an order under a task order contract except for a protest on the grounds that the order increases the scope, period, or maximum value of the contract; or a protest of an order valued in excess of $10 million. Protests of orders in excess of $10 million may only be filed with the Government Accountability Office, in accordance with the procedures at FAR 33.104.

REQUEST FOR INFORMATION (RFI)

SOLICITATION N40192-15-R-2900

The Government does not intend to respond to inquiries submitted less than 10 days before the proposal receipt date shown in the solicitation. Please submit questions via email to Janeen Bais at Janeen.Bais@fe.navy.mil.

FIRM NAME: _____

POC: _____

ADDRESS: _____

_____

TELEPHONE NUMBER: _____

E-MAIL ADDRESS: _____

Question is regarding: (If known)

Section of the Request for Proposal: _____

Paragraph: _____

Page number: _____

QUESTION:

_____

_____

_____

_____

_____

_____

_____

_____

_____

Office of the Governor of Guam
P.O. Box 2950 Hagatfi.a, Guam 96932
TEL: (6ri) 472-8931 • FAX: (67J.) 477-4826 • EMAIL: govemOJ@mailgov.gu

FELIX PEREZ CAMACHO
Governor

MICHAEL W. CRUZ, MD
Lieutenalll Governor

AMENDED
COMMON CONSTRUCTION PREVAILING WAGE RATES FOR GUAM

Pursuant to 8 CFR 214.2(h)(b)(ii)(v)(F)(2) prevailing wage rates for common construction occupations in Guam must be approved by the U.S. Citizenship & Immigration Service (USCIS) Commissioner of Immigration prior to implementation. These Prevailing Wage Rates apply only to H-28 workers and similarly employed U.S. workers in Guam. USCIS has reviewed and reconsidered the Government of Guam's proposed rates and has approved new rates effective September 29, 2008 as follows:

OCCUPATION	HOURLY WAGE RATES
BRICKLAYER	$14.02
CARPENTER	$13.56
CEMENT MASON	$12.87
CONSTRUCTION EQUIPMENT MECHANIC	$14.14
COOK, CAMP	$11.85
ELECTRICIAN	$15.45
HEATING, AIR CONDITIONING & REFRIGERATION MECHANIC	$15.73
OPERATING ENGINEER (Heavy Equip. Operator)	$13.77
PAINTER	$14.60
PIPEFITTER	$16.80
PLASTERER	$10.98
PLUMBER	$14.96
REINFORCING METAL WORKER	$12.56
SHEET-METAL WORKER	$15.17
STRUCTURAL STEEL WORKER	$13.22
SURVEYOR HELPER	$15.98
WELDER	$16.09

These prevailing wage rates are effective for both new and extension temporary labor certifications. The prevailing wage rate on Temporary Labor Certifications approved prior to the implementation of these new rates shall remain in effect for the duration of the existing labor certifications.

For further information, please contact Maria Connelley, Director of Labor, at (671) 475-7075, or Greg Massey, Administrator for the Alien Labor Processing & Certification Division (ALPCD) at (671) 475-7005.

FELIX P. CAMACHO
Governor of Guam

OCT 0 6 2008

CONSTRUCTION EXPERIENCE PROJECT DATA SHEET

Project No. (check one) : ☐ CON #1 ☐ CON #2 ☐ CON #3 ☐ CON #4 ☐ CON #5

1. Experience for: ☐ Offeror ☐ Joint-Venture ☐ Other (Explain)

Firm Name:
Address:
Phone Number:
DUNS Number:
Point of Contact: Contact Phone Number:

2. Work Performed as: ☐ Prime Contractor ☐ Sub Contractor ☐ Joint Venture ☐ Other (Explain)

Percent of project work performed:
If subcontractor, who was prime (Name/Phone #):

3. Contract Number: Delivery/Task Order Number:

Title:
Location:

4. Award Date (mm/dd/yy): Completion Date (mm/dd/yy):

5. Type of work:

☐ New Construction ☐ Renovation ☐ Repair ☐ Alteration ☐ Other (explain):

6. Type of Contract/Task Order: (**Check <u>ALL</u> that apply**)

☐ Firm-Fixed Price ☐ Cost/Time and Material ☐ Other (explain):

7. Construction Project:

Award Amount: Final Price:

Type of Contract/Task Order: (**Check <u>ALL</u> that apply**)

☐ Design-Build ☐ Design-Bid-Build ☐ Delivery/Task Order (IDIQ) ☐ Other (explain):

If Design-Build, identify the Lead Design Firm:_____

9. Provide a detailed description of the project and the relevancy to the project requirements of this RFP (i.e.: unique features, square footage, construction methods).

10. Provide a detailed description of what work your firm self-performed on this project:

11. Other Information:

Sample Project Timeline

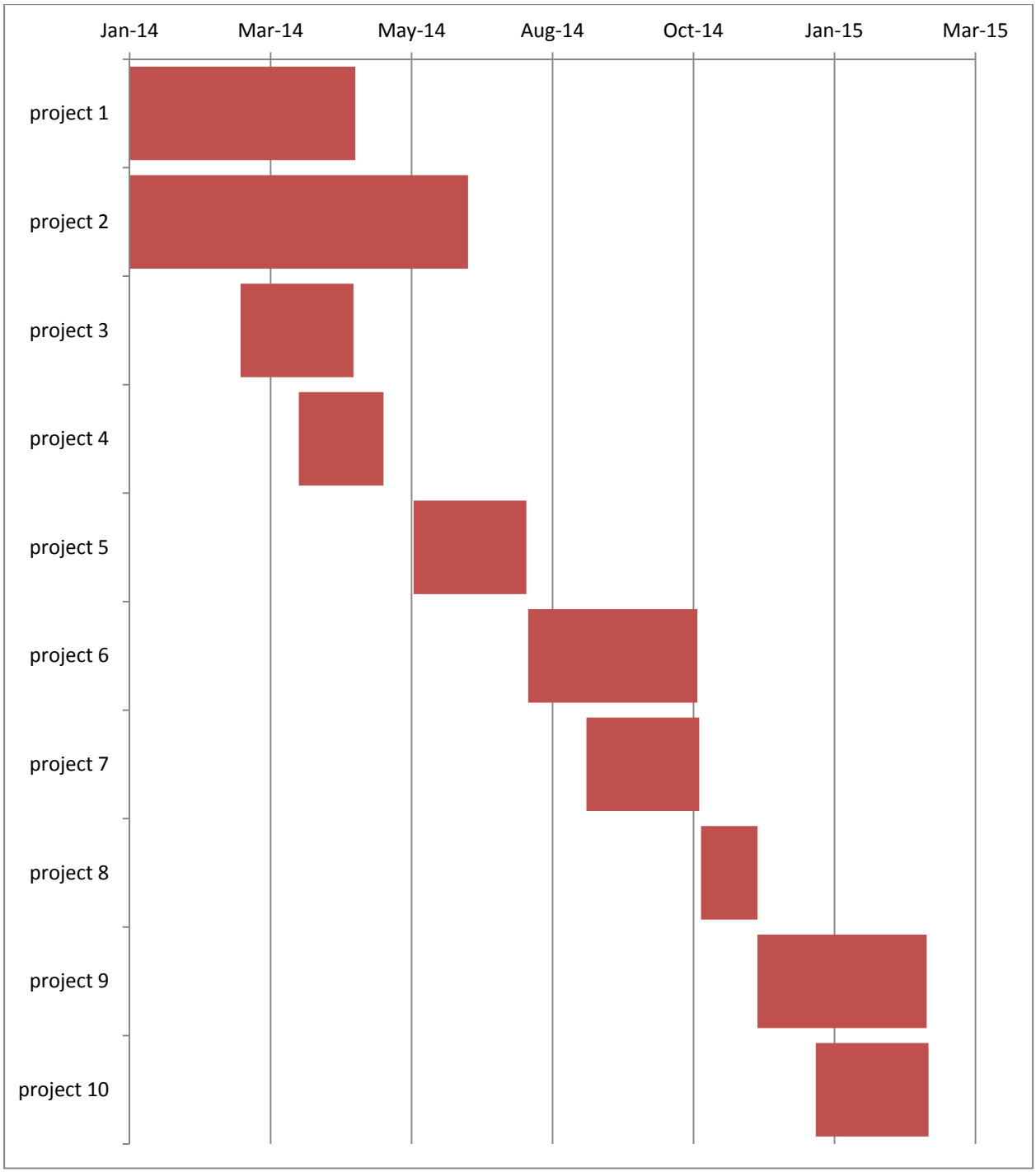

NAVFAC/USACE PAST PERFORMANCE QUESTIONNAIRE (Form PPQ-0)

CONTRACT INFORMATION (Contractor to complete Blocks 1-4)

1. Contractor Information
Firm Name: CAGE Code:
Address: DUNs Number:
Phone Number:
Email Address:
Point of Contact: Contact Phone Number:

2. Work Performed as: ☐ Prime Contractor ☐ Sub Contractor ☐ Joint Venture ☐ Other (Explain)
Percent of project work performed:
If subcontractor, who was the prime (Name/Phone #):

3. Contract Information
Contract Number:
Delivery/Task Order Number (if applicable):
Contract Type: ☐ Firm Fixed Price ☐ Cost Reimbursement ☐ Other (Please specify):
Contract Title:
Contract Location:

Award Date (mm/dd/yy):
Contract Completion Date (mm/dd/yy):
Actual Completion Date (mm/dd/yy):
Explain Differences:

Original Contract Price (Award Amount):
Final Contract Price (*to include all modifications, if applicable*):
Explain Differences:

4. Project Description:
Complexity of Work ☐ High ☐ Med ☐ Routine
How is this project relevant to project of submission? (*Please provide details such as similar equipment, requirements, conditions, etc.*)

CLIENT INFORMATION (Client to complete Blocks 5-8)

5. Client Information
Name:
Title:
Phone Number:
Email Address:

6. Describe the client's role in the project:

7. Date Questionnaire was completed (mm/dd/yy)**:**

8. Client's Signature:

NOTE: NAVFAC REQUESTS THAT THE CLIENT COMPLETES THIS QUESTIONNAIRE AND SUBMITS DIRECTLY BACK TO THE OFFEROR. THE OFFEROR WILL SUBMIT THE COMPLETED QUESTIONNAIRE TO NAVFAC WITH THEIR PROPOSAL, AND MAY DUPLICATE THIS QUESTIONNAIRE FOR FUTURE SUBMISSION ON NAVFAC SOLICITATIONS. CLIENTS ARE HIGHLY ENCOURAGED TO SUBMIT QUESTIONNAIRES DIRECTLY TO THE OFFEROR. HOWEVER, QUESTIONNAIRES MAY BE SUBMITTED DIRECTLY TO NAVFAC. PLEASE CONTACT THE OFFEROR FOR NAVFAC POC INFORMATION. THE GOVERNMENT RESERVES THE RIGHT TO VERIFY ANY AND ALL INFORMATION ON THIS FORM.

ADJECTIVE RATINGS AND DEFINITIONS TO BE USED TO BEST REFLECT YOUR EVALUATION OF THE CONTRACTOR'S PERFORMANCE

RATING	DEFINITION	NOTE
(E) Exceptional	Performance meets contractual requirements and exceeds many to the Government/Owner's benefit. The contractual performance of the element or sub-element being assessed was accomplished with few minor problems for which corrective actions taken by the contractor was highly effective.	An Exceptional rating is appropriate when the Contractor successfully performed multiple significant events that were of benefit to the Government/Owner. A singular benefit, however, could be of such magnitude that it alone constitutes an Exceptional rating. Also, there should have been NO significant weaknesses identified.
(VG) Very Good	Performance meets contractual requirements and exceeds some to the Government's/Owner's benefit. The contractual performance of the element or sub-element being assessed was accomplished with some minor problems for which corrective actions taken by the contractor were effective.	A Very Good rating is appropriate when the Contractor successfully performed a significant event that was a benefit to the Government/Owner. There should have been no significant weaknesses identified.
(S) Satisfactory	Performance meets minimum contractual requirements. The contractual performance of the element or sub-element contains some minor problems for which corrective actions taken by the contractor appear or were satisfactory.	A Satisfactory rating is appropriate when there were only minor problems, or major problems that the contractor recovered from without impact to the contract. There should have been NO significant weaknesses identified. Per DOD policy, a fundamental principle of assigning ratings is that contractors will not be assessed a rating lower than Satisfactory solely for not performing beyond the requirements of the contract.
(M) Marginal	Performance does not meet some contractual requirements. The contractual performance of the element or sub-element being assessed reflects a serious problem for which the contractor has not yet identified corrective actions. The contractor's proposed actions appear only marginally effective or were not fully implemented.	A Marginal is appropriate when a significant event occurred that the contractor had trouble overcoming which impacted the Government/Owner.
(U) Unsatisfactory	Performance does not meet most contractual requirements and recovery is not likely in a timely manner. The contractual performance of the element or sub-element contains serious problem(s) for which the contractor's corrective actions appear or were ineffective.	An Unsatisfactory rating is appropriate when multiple significant events occurred that the contractor had trouble overcoming and which impacted the Government/Owner. A singular problem, however, could be of such serious magnitude that it alone constitutes an unsatisfactory rating.
(N) Not Applicable	No information or did not apply to your contract	Rating will be neither positive nor negative.

Contractor Information (Firm Name): _____
Client Information (Name): _____

TO BE COMPLETED BY CLIENT

PLEASE CIRCLE THE ADJECTIVE RATING WHICH BEST REFLECTS YOUR EVALUATION OF THE CONTRACTOR'S PERFORMANCE.

1. QUALITY:						
a) Quality of technical data/report preparation efforts	E	VG	S	M	U	N
b) Ability to meet quality standards specified for technical performance	E	VG	S	M	U	N
c) Timeliness/effectiveness of contract problem resolution without extensive customer guidance	E	VG	S	M	U	N
d) Adequacy/effectiveness of quality control program and adherence to contract quality assurance requirements (without adverse effect on performance)	E	VG	S	M	U	N
2. SCHEDULE/TIMELINESS OF PERFORMANCE:						
a) Compliance with contract delivery/completion schedules including any significant intermediate milestones. *(If liquidated damages were assessed or the schedule was not met, please address below)*	E	VG	S	M	U	N
b) Rate the contractor's use of available resources to accomplish tasks identified in the contract	E	VG	S	M	U	N
3. CUSTOMER SATISFACTION:						
a) To what extent were the end users satisfied with the project?	E	VG	S	M	U	N
b) Contractor was reasonable and cooperative in dealing with your staff (including the ability to successfully resolve disagreements/disputes; responsiveness to administrative reports, businesslike and communication)	E	VG	S	M	U	N
c) To what extent was the contractor cooperative, businesslike, and concerned with the interests of the customer?	E	VG	S	M	U	N
d) Overall customer satisfaction	E	VG	S	M	U	N
4. MANAGEMENT/ PERSONNEL/LABOR						
a) Effectiveness of on-site management, including management of subcontractors, suppliers, materials, and/or labor force?	E	VG	S	M	U	N
b) Ability to hire, apply, and retain a qualified workforce to this effort	E	VG	S	M	U	N
c) Government Property Control	E	VG	S	M	U	N
d) Knowledge/expertise demonstrated by contractor personnel	E	VG	S	M	U	N
e) Utilization of Small Business concerns	E	VG	S	M	U	N
f) Ability to simultaneously manage multiple projects with multiple disciplines	E	VG	S	M	U	N
g) Ability to assimilate and incorporate changes in requirements and/or priority, including planning, execution and response to Government changes	E	VG	S	M	U	N
h) Effectiveness of overall management (including ability to effectively lead, manage and control the program)	E	VG	S	M	U	N
5. COST/FINANCIAL MANAGEMENT						
a) Ability to meet the terms and conditions within the contractually agreed price(s)?	E	VG	S	M	U	N

Contractor Information (Firm Name): _____
Client Information (Name): _____

b) Contractor proposed innovative alternative methods/processes that reduced cost, improved maintainability or other factors that benefited the client	E	VG	S	M	U	N
c) If this is/was a Government cost type contract, please rate the Contractor's timeliness and accuracy in submitting monthly invoices with appropriate back-up documentation, monthly status reports/budget variance reports, compliance with established budgets and avoidance of significant and/or unexplained variances (under runs or overruns)	E	VG	S	M	U	N
d) Is the Contractor's accounting system adequate for management and tracking of costs? *If no, please explain in Remarks section.*		Yes			No	
e) If this is/was a Government contract, has/was this contract been partially or completely terminated for default or convenience or are there any pending terminations? *Indicate if show cause or cure notices were issued, or any default action in comment section below.*		Yes			No	
f) Have there been any indications that the contractor has had any financial problems? *If yes, please explain below.*		Yes			No	
6. SAFETY/SECURITY						
a) To what extent was the contractor able to maintain an environment of safety, adhere to its approved safety plan, and respond to safety issues? (Includes: following the users rules, regulations, and requirements regarding housekeeping, safety, correction of noted deficiencies, etc.)	E	VG	S	M	U	N
b) Contractor complied with all security requirements for the project and personnel security requirements.	E	VG	S	M	U	N
7. GENERAL						
a) Ability to successfully respond to emergency and/or surge situations (including notifying COR, PM or Contracting Officer in a timely manner regarding urgent contractual issues).	E	VG	S	M	U	N
b) Compliance with contractual terms/provisions *(explain if specific issues)*	E	VG	S	M	U	N
c) Would you hire or work with this firm again? *(If no, please explain below)*		Yes			No	
d) In summary, provide an overall rating for the work performed by this contractor.	E	VG	S	M	U	N

Please provide responses to the questions above (*if applicable*) and/or additional remarks. Furthermore, please provide a brief narrative addressing specific strengths, weaknesses, deficiencies, or other comments which may assist our office in evaluating performance risk *(please attach additional pages if necessary)***:**

A.	B. Reference of Document Being Continuted	C. PAGE
Exhibit A	**N40192-15-R-2900**	

D NAME OF OFFEROR OR CONTRACTOR

E ELIN NO.	F SERVICES	G ESTIMATED QUANTITY	H UNIT	I UNIT PRICE	J AMOUNT
	IDIQ CONTRACT FOR PAINTING CONSTRUCTION SERVICES VARIOUS LOCATIONS, GUAM				
	CONTRACT RATE SCHEDULE - BASE PERIOD INDEFINITE QUANTITY WORK			Unit Price	Total Amount
A001	**Repair Concrete Cracks in Accordance with Section 03 01 30.71**				
A00101	Up to 10 Feet High	40,000	LF		
A00102	Over 10 Feet High	12,000	LF		
A002	**Repair Concrete Spalls in Accordance with Section 03 01 30.71**				
A00201	Up to 10 Feet High)	24,000	SF		
A00202	Over 10 Feet High)	6,000	SF		
A003	**Repair Metal Flashing or any Sheet Metal Attached to Exterior of Building in Accordance with Section 07 60 00.**				
A00301	Galvanized Steel	6,000	SF		
A00302	Stainless Steel	3,000	SF		
A00303	Aluminum	300	SF		
A00304	Copper	200	SF		
A00305	Terne-Coated Stainless	150	SF		
A004	**Replace Rain Gutter or Downspout in Accordance with Section 07 60 00.**				
A00401	Galvanized Steel	6,000	LF		
A00402	Stainless Steel	3,000	LF		
A00403	Aluminum	300	LF		
A00404	Copper	500	LF		
A00405	Terne-Coated Stainless	200	LF		
A005	**Align and Resecure Metal Flashing, Rain Gutter, Downspout or and Sheet Metal Component Attached to Building in Accordance with Section 07 60 00.**				
A00501	Up to 10 Feet High	1,000	SF		
A00502	Over 10 Feet High	2,500	SF		
A006	**Waterblast in Accordance with Section 09 90 00.**				
A00601	Up to 10 Feet High	8,000,000	SF		
A00602	Over 10 Feet High	4,000,000	SF		
A007	**Caulk Exterior/Interior Joint in Accordance with Section 07 92 00.**				
A00701	Up to 10 Feet High	100,000	LF		
A00702	Over 10 Feet High	30,000	LF		
A008	**Exterior Metal Surfaces: Surface Preparation and Painting in Accordance with Section 09 90 00. (Up to 10 Feet High)**				
A00801	Surface Preparation (SSPC SP 2) Hand Tool Cleaning	150,000	SF		
A00802	Surface Preparation (SSPC SP 3) Power Tool Cleaning	10,000	SF		
A00803	MPI 23, Metal Primer	50,000	SF		
A00804	MPI 79, Metal Primer, Alkyd	1,000	SF		
A00805	MPI 134, Galvanized Primer, Water Base	20,000	SF		
A00806	MPI 101, Epoxy Anti Corrosive Metal Primer	2,000	SF		
A00807	MPI 94, Alkyd, Semi Gloss, Finished Coat	1,000	SF		
A00808	MPI 22, Aluminum Heat-Resisting, Up to 1100 deg F)	500	SF		
A00809	MPI 10, Exterior Latex Flat, Finish Coat,	1,000	SF		
A00810	MPI 11, Latex, Semi Gloss, Finish Coat,	200,000	SF		
A00811	MPI 110, Water Based Light Industrial, Eggshell, Semi Gloss, and Gloss Finished Coat	50,000	SF		
A00812	MPI 95, Quick Drying Primer for Aluminum	1,000	SF		

E ELIN NO.	F SERVICES	G ESTIMATED QUANTITY	H UNIT	I UNIT PRICE	J AMOUNT
A00813	DOD-C-24667, Coating System, Nonskid, for Roll or Spray Application, Finish Coat	5,000	SF		
A00814	Additive for Aggregate (Textured Coating)	2,000	SF		
A00815	Additive Cost for Line Items A008 Over 10 Feet high	150,000	SF		
A009	**Exterior Concrete and Cementitious Surfaces: Preparation and Painting in Accordance with Section 09 90 00. (Up to 10 Feet High)**				
A00901	Surface Preparation, Unpainted Surfaces	5,000	SF		
A00902	Surface Preparation, Painted Surfaces	5,000,000	SF		
A00903	Remove Efflorescence	5,000	SF		
A00904	MPI 4, Interior/Exterior Latex Block Filler	3,000	SF		
A00905	MPI 10, Exterior Latex, Flat, Primer Coat	30,000	SF		
A00906	MPI 11, Exterior Latex, Semi Gloss, Primer Coat	60,000	SF		
A00907	MPI 42, Latex, Textured Primer	80,000	SF		
A00908	MPI 10, Latex, Flat, Finished Coat	30,000	SF		
A00909	MPI 11, Latex, Semi Gloss, Finished Coat	5,000,000	SF		
A00910	SSPC 18, for Swimming Pool	5,000	SF		
A00911	DOD-C-24667, Coating System, Nonskid, for Roll or Spray Application, Finish Coat	100,000	SF		
A00912	Additive for Aggregate (Textured Coating)	100,000	SF		
A00913	Anti Graffiti Paint: Surface Preparation and Complete Painting	100,000	SF		
A00914	Additive Cost for line Items A009 Over 10 Feet High	300,000	SF		
A010	**Exterior Wood, Dressed Lumber, and Paneling Surfaces: Surface Preparation and Painting in Accordance with Section 09 90 00. (Up to 10 Feet High)**				
A01001	Surface Preparation, Unpainted or Painted Surfaces	3,000	SF		
A01002	MPI 7, Exterior Oil Wood Primer	200	SF		
A01003	MPI 5, Alkyd Wood Primer	500	SF		
A01004	MPI 6, Latex Wood Primer	3,000	SF		
A01005	MPI 94, Alkyd, Semi Gloss, Finished Coat	1,000	SF		
A01006	MPI 10, Latex, Flat, Finished Coat	1,000	SF		
A01007	MPI 11, Latex, Semi Gloss, Finished Coat	4,000	SF		
A01008	Additive Cost for Line Items A010 Over 10 Feet High	2,000	SF		
A011	**Interior Concrete and Cementitious Surfaces: Preparation and Painting in Accordance with Section 09 90 00. (Up to 10 Feet High)**				
A01101	Surface Preparation, Unpainted Surfaces	5,000	SF		
A01102	Surface Preparation, Painted Surfaces	100,000	SF		
A01103	MPI 50, Latex Primer Sealer	10,000	SF		
A01104	MPI 10, Latex Primer, Flat	10,000	SF		
A01105	MPI 11, Latex, Primer, Semi Gloss	70,000	SF		
A01106	MPI 110, Water Base Primer, Eggshell, Semi Gloss, and Gloss	5,000	SF		
A01107	MPI 4, Interior/Exterior Latex Block Filler	2,000	SF		
A01108	MPI 10, Latex, Flat, Finished Coat	10,000	SF		
A01109	MPI 11, Latex, Semi Gloss, Finished Coat	100,000	SF		
A01110	MPI 52, Latex, Eggshell, Finished Coat	2,000	SF		
A01111	MPI 54, Latex, Semi Gloss, Finished Coat	2,000	SF		
A01112	MPI 110, Water Base, Eggshell, Semi Gloss, and Gloss, Finished Coat	5,000	SF		
A01113	MPI 60, Interior/Exterior Latex, Floor Paint	1,000	SF		
A01114	MPI 138, High Performance Latex, Flat, Finished Coat	10,000	SF		
A01115	MPI 139, High Performance Latex, Eggshell, Finished Coat	1,000	SF		
A01116	MPI 141, High Performance Latex, Semi Gloss, Finished Coat	5,000	SF		
A01117	Additive Cost for Line Items A011 Over 10 Feet High	3,000	SF		

A.	B. Reference of Document Being Continuted	C. PAGE
Exhibit A	**N40192-15-R-2900**	

D NAME OF OFFEROR OR CONTRACTOR

E ELIN NO.	F SERVICES	G ESTIMATED QUANTITY	H UNIT	I UNIT PRICE		J AMOUNT
A012	**Interior Metal Surfaces: Surface Preparation and Painting in Accordance with Section 09 90 00. (Up to 10 Feet High)**					
A01201	Surface Preparation (SSPC SP 2) Hand Tool Cleaning	1,500	SF			
A01202	Surface Preparation (SSPC SP 3) Power Tool Cleaning	200	SF			
A01203	MPI 79, Alkyd Metal Primer	300	SF			
A01204	MPI 95, Primer for Aluminum	200	SF			
A01205	MPI 2, Heat-Resisting (Up to 1100 deg F)	200	SF			
A01206	MPI 139, High Performance Latex, Eggshell, Finished Coat	500	SF			
A01207	MPI 27, Interior/Exterior Floor Enamel Plus Nonskid Additive	500	SF			
A01208	MPI 51, Alkyd, Eggshell, Finished Coat	100	SF			
A01209	MPI 47, Alkyd, Semi Gloss, Finished Coat	300	SF			
A01210	MPI 141, High Performance Latex, Semi Gloss, Finished Coat	30,000	SF			
A01211	Additive Cost for Line Items A012 Over 10 Feet high	3,000	SF			
A013	**Interior Wood Surfaces: Surface Preparation and Painting in Accordance with Section 09 90 00. (Up to 10 Feet High)**					
A01301	Surface Preparation; Painted and Unpainted Surfaces	1,000	SF			
A01302	Additive Cost for Patching	300	SF			
A01303	MPI 39, Latex Based Wood Primer	2,000	SF			
A01304	MPI 45, Alkyd Primer Sealer	500	SF			
A01305	MPI 46, Enamel Under Coat	200	SF			
A01306	MPI 90, Urethane Clear Satin	1,000	SF			
A01307	MPI 139, Finished Coat, Latex, Eggshell	200	SF			
A01308	MPI 141, Finished Coat, Latex, Semi Gloss	7,000	SF			
A01309	MPI 51, Finished Coat, Alkyd, Eggshell	500	SF			
A01310	MPI 47, Finished Coat, Alkyd, Semi Gloss	200	SF			
A01311	MPI 57, Urethane Clear Satin	1,000	SF			
A01312	MPI 90, Wood Stain	1,000	SF			
A01313	MPI 31, Clear Gloss for Wood Surfaces	1,500	SF			
A01314	MPI 110, Water Base Light Industrial Coating, Eggshell, Semi Gloss, and Gloss	2,000	SF			
A01315	Additive Cost for Line Items A013 Over 10 Feet high	2,500	SF			
A014	**Interior Plaster, Gypsum Board, and Textured Surfaces: Surface Preparation and Painting in Accordance with Section 09 90 00. (Up to 10 Feet High)**					
A01401	Painted and Unpainted Surfaces	10,000	SF			
A01402	Additive Cost for Patching and Taping	5,000	SF			
A01403	MPI 50, Latex, Primer Sealer	1,500	SF			
A01404	MPI 138, High Performance Latex, Flat, Finished Coat	1,000	SF			
A01405	MPI 141, High Performance Latex, Semi Gloss, Finished Coat	100,000	SF			
A01406	MPI 47, Alkyd, Semi Gloss, Finished Coat	1,000	SF			
A01407	Additive Cost for Line Items A014 Over 10 Feet High	10,000	SF			
A015	**Provide Pipe Identification in Accordance with Section 09 90 00. (Mil-Std-101)**					
A01501	Pipes Up to 4-Inch Diameter	1,000	LF			
A01502	Pipes Over 4-Inch Diameter	850	LF			
A016	**Trim Trees and Shrubs Obstructing the Painting Operation in Accordance with Section 09 90 00.**					
A01601	Up to 10-Feet High	1,000	LF			
A01602	Over 10-Feet High	500	LF			
A017	**Remove and Dispose Lead Containing Paint on Accordance with Section 02 83 19.00 10.**					
A01701	Up to 10-Feet High	15,000	SF			
A01702	Over 10-Feet High	5,000	SF			

A.	B. Reference of Document Being Continuted	C. PAGE
Exhibit A	**N40192-15-R-2900**	

D NAME OF OFFEROR OR CONTRACTOR

E ELIN NO.	F SERVICES	G ESTIMATED QUANTITY	H UNIT	I UNIT PRICE	J AMOUNT
A018	**Pavement/Curb Markings: Surface Preparation and Painting in Accordance with Section 32 17 24.00 10**				
A01801	4-Inch Wide, White, Yellow, or Red	10,000	LF		
A01802	6-Inch Wide, White, Yellow, or Red	5,000	LF		
A01803	8-Inch Wide, White, Yellow, or Red	2,000	LF		
A01804	12-Inch Wide, White, Yellow, or Red	1,000	LF		
A019	**Pavement Markings: Surface Preparation and Painting of Handicap Logo**				
A01901	Handicap Logo, White	50	EA		
A020	**Paint Building Numbers or Letters in Accordance with Section 09 90 00**				
A02001	4" to 8" High	6,000	EA		
A02002	8-1/2" to 16" High	1,000	EA		
A02003	16-1/2" to 24" High	50	EA		
A02004	24-1/2" to 36" High	50	EA		
A02005	36-1/2" to 48" High	50	EA		
A02006	48-1/2" to 60" High	20	EA		
A02007	60-1/2" to 72" High	20	EA		

TOTAL PRICE (ELIN A001 THRU A020)

Base Period

A.	B. Reference of Document Being Continuted	C. PAGE
Exhibit B	**N40192-15-R-2900**	

D NAME OF OFFEROR OR CONTRACTOR

IDIQ CONTRACT FOR PAINTING CONSTRUCTION SERVICES
VARIOUS LOCATIONS, GUAM

CONTRACT RATE SCHEDULE - FIRST OPTION PERIOD
INDEFINITE QUANTITY WORK

E ELIN NO.	F SERVICES	G ESTIMATED QUANTITY	H UNIT	I UNIT PRICE	J AMOUNT
				Unit Price	Total Amount
B001	**Repair Concrete Cracks in Accordance with Section 03 01 30.71**				
B00101	Up to 10 Feet High	40,000	LF		
B00102	Over 10 Feet High	12,000	LF		
B002	**Repair Concrete Spalls in Accordance with Section 03 01 30.71**				
B00201	Up to 10 Feet High)	24,000	SF		
B00202	Over 10 Feet High)	6,000	SF		
B003	**Repair Metal Flashing or any Sheet Metal Attached to Exterior of Building in Accordance with Section 07 60 00.**				
B00301	Galvanized Steel	6,000	SF		
B00302	Stainless Steel	3,000	SF		
B00303	Aluminum	300	SF		
B00304	Copper	200	SF		
B00305	Terne-Coated Stainless	150	SF		
B004	**Replace Rain Gutter or Downspout in Accordance with Section 07 60 00.**				
B00401	Galvanized Steel	6,000	LF		
B00402	Stainless Steel	3,000	LF		
B00403	Aluminum	300	LF		
B00404	Copper	500	LF		
B00405	Terne-Coated Stainless	200	LF		
B005	**Align and Resecure Metal Flashing, Rain Gutter, Downspout or and Sheet Metal Component Attached to Building in Accordance with Section 07 60 00.**				
B00501	Up to 10 Feet High	1,000	SF		
B00502	Over 10 Feet High	2,500	SF		
B006	**Waterblast in Accordance with Section 09 90 00.**				
B00601	Up to 10 Feet High	8,000,000	SF		
B00602	Over 10 Feet High	4,000,000	SF		
B007	**Caulk Exterior/Interior Joint in Accordance with Section 07 92 00.**				
B00701	Up to 10 Feet High	100,000	LF		
B00702	Over 10 Feet High	30,000	LF		
B008	**Exterior Metal Surfaces: Surface Preparation and Painting in Accordance with Section 09 90 00. (Up to 10 Feet High)**				
B00801	Surface Preparation (SSPC SP 2) Hand Tool Cleaning	150,000	SF		
B00802	Surface Preparation (SSPC SP 3) Power Tool Cleaning	10,000	SF		
B00803	MPI 23, Metal Primer	50,000	SF		
B00804	MPI 79, Metal Primer, Alkyd	1,000	SF		
B00805	MPI 134, Galvanized Primer, Water Base	20,000	SF		
B00806	MPI 101, Epoxy Anti Corrosive Metal Primer	2,000	SF		
B00807	MPI 94, Alkyd, Semi Gloss, Finished Coat	1,000	SF		
B00808	MPI 22, Aluminum Heat-Resisting, Up to 1100 deg F)	500	SF		
B00809	MPI 10, Exterior Latex Flat, Finish Coat,	1,000	SF		
B00810	MPI 11, Latex, Semi Gloss, Finish Coat,	200,000	SF		
B00811	MPI 110, Water Based Light Industrial, Eggshell, Semi Gloss, and Gloss Finished Coat	50,000	SF		
B00812	MPI 95, Quick Drying Primer for Aluminum	1,000	SF		

A.	B. Reference of Document Being Continuted	C. PAGE
Exhibit B	**N40192-15-R-2900**	

D NAME OF OFFEROR OR CONTRACTOR

E ELIN NO.	F SERVICES	G ESTIMATED QUANTITY	H UNIT	I UNIT PRICE	J AMOUNT
B00813	DOD-C-24667, Coating System, Nonskid, for Roll or Spray Application, Finish Coat	5,000	SF		
B00814	Additive for Aggregate (Textured Coating)	2,000	SF		
B00815	Additive Cost for Line Items A008 Over 10 Feet high	150,000	SF		
B009	**Exterior Concrete and Cementitious Surfaces: Preparation and Painting in Accordance with Section 09 90 00. (Up to 10 Feet High)**				
B00901	Surface Preparation, Unpainted Surfaces	5,000	SF		
B00902	Surface Preparation, Painted Surfaces	5,000,000	SF		
B00903	Remove Efflorescence	5,000	SF		
B00904	MPI 4, Interior/Exterior Latex Block Filler	3,000	SF		
B00905	MPI 10, Exterior Latex, Flat, Primer Coat	30,000	SF		
B00906	MPI 11, Exterior Latex, Semi Gloss, Primer Coat	60,000	SF		
B00907	MPI 42, Latex, Textured Primer	80,000	SF		
B00908	MPI 10, Latex, Flat, Finished Coat	30,000	SF		
B00909	MPI 11, Latex, Semi Gloss, Finished Coat	5,000,000	SF		
B00910	SSPC 18, for Swimming Pool	5,000	SF		
B00911	DOD-C-24667, Coating System, Nonskid, for Roll or Spray Application, Finish Coat	100,000	SF		
B00912	Additive for Aggregate (Textured Coating)	100,000	SF		
B00913	Anti Graffiti Paint: Surface Preparation and Complete Painting	100,000	SF		
B00914	Additive Cost for line Items A009 Over 10 Feet High	300,000	SF		
B010	**Exterior Wood, Dressed Lumber, and Paneling Surfaces: Surface Preparation and Painting in Accordance with Section 09 90 00. (Up to 10 Feet High)**				
B01001	Surface Preparation, Unpainted or Painted Surfaces	3,000	SF		
B01002	MPI 7, Exterior Oil Wood Primer	200	SF		
B01003	MPI 5, Alkyd Wood Primer	500	SF		
B01004	MPI 6, Latex Wood Primer	3,000	SF		
B01005	MPI 94, Alkyd, Semi Gloss, Finished Coat	1,000	SF		
B01006	MPI 10, Latex, Flat, Finished Coat	1,000	SF		
B01007	MPI 11, Latex, Semi Gloss, Finished Coat	4,000	SF		
B01008	Additive Cost for Line Items A010 Over 10 Feet High	2,000	SF		
B011	**Interior Concrete and Cementitious Surfaces: Preparation and Painting in Accordance with Section 09 90 00. (Up to 10 Feet High)**				
B01101	Surface Preparation, Unpainted Surfaces	5,000	SF		
B01102	Surface Preparation, Painted Surfaces	100,000	SF		
B01103	MPI 50, Latex Primer Sealer	10,000	SF		
B01104	MPI 10, Latex Primer, Flat	10,000	SF		
B01105	MPI 11, Latex, Primer, Semi Gloss	70,000	SF		
B01106	MPI 110, Water Base Primer, Eggshell, Semi Gloss, and Gloss	5,000	SF		
B01107	MPI 4, Interior/Exterior Latex Block Filler	2,000	SF		
B01108	MPI 10, Latex, Flat, Finished Coat	10,000	SF		
B01109	MPI 11, Latex, Semi Gloss, Finished Coat	100,000	SF		
B01110	MPI 52, Latex, Eggshell, Finished Coat	2,000	SF		
B01111	MPI 54, Latex, Semi Gloss, Finished Coat	2,000	SF		
B01112	MPI 110, Water Base, Eggshell, Semi Gloss, and Gloss, Finished Coat	5,000	SF		
B01113	MPI 60, Interior/Exterior Latex, Floor Paint	1,000	SF		
B01114	MPI 138, High Performance Latex, Flat, Finished Coat	10,000	SF		
B01115	MPI 139, High Performance Latex, Eggshell, Finished Coat	1,000	SF		
B01116	MPI 141, High Performance Latex, Semi Gloss, Finished Coat	5,000	SF		
B01117	Additive Cost for Line Items A011 Over 10 Feet High	3,000	SF		

A.	B. Reference of Document Being Continuted	C. PAGE
Exhibit B	**N40192-15-R-2900**	

D NAME OF OFFEROR OR CONTRACTOR

E ELIN NO.	F SERVICES	G ESTIMATED QUANTITY	H UNIT	I UNIT PRICE	J AMOUNT
B012	**Interior Metal Surfaces: Surface Preparation and Painting in Accordance with Section 09 90 00. (Up to 10 Feet High)**				
B01201	Surface Preparation (SSPC SP 2) Hand Tool Cleaning	1,500	SF		
B01202	Surface Preparation (SSPC SP 3) Power Tool Cleaning	200	SF		
B01203	MPI 79, Alkyd Metal Primer	300	SF		
B01204	MPI 95, Primer for Aluminum	200	SF		
B01205	MPI 2, Heat-Resisting (Up to 1100 deg F)	200	SF		
B01206	MPI 139, High Performance Latex, Eggshell, Finished Coat	500	SF		
B01207	MPI 27, Interior/Exterior Floor Enamel Plus Nonskid Additive	500	SF		
B01208	MPI 51, Alkyd, Eggshell, Finished Coat	100	SF		
B01209	MPI 47, Alkyd, Semi Gloss, Finished Coat	300	SF		
B01210	MPI 141, High Performance Latex, Semi Gloss, Finished Coat	30,000	SF		
B01211	Additive Cost for Line Items A012 Over 10 Feet high	3,000	SF		
B013	**Interior Wood Surfaces: Surface Preparation and Painting in Accordance with Section 09 90 00. (Up to 10 Feet High)**				
B01301	Surface Preparation; Painted and Unpainted Surfaces	1,000	SF		
B01302	Additive Cost for Patching	300	SF		
B01303	MPI 39, Latex Based Wood Primer	2,000	SF		
B01304	MPI 45, Alkyd Primer Sealer	500	SF		
B01305	MPI 46, Enamel Under Coat	200	SF		
B01306	MPI 90, Urethane Clear Satin	1,000	SF		
B01307	MPI 139, Finished Coat, Latex, Eggshell	200	SF		
B01308	MPI 141, Finished Coat, Latex, Semi Gloss	7,000	SF		
B01309	MPI 51, Finished Coat, Alkyd, Eggshell	500	SF		
B01310	MPI 47, Finished Coat, Alkyd, Semi Gloss	200	SF		
B01311	MPI 57, Urethane Clear Satin	1,000	SF		
B01312	MPI 90, Wood Stain	1,000	SF		
B01313	MPI 31, Clear Gloss for Wood Surfaces	1,500	SF		
B01314	MPI 110, Water Base Light Industrial Coating, Eggshell, Semi Gloss, and Gloss	2,000	SF		
B01315	Additive Cost for Line Items A013 Over 10 Feet high	2,500	SF		
B014	**Interior Plaster, Gypsum Board, and Textured Surfaces: Surface Preparation and Painting in Accordance with Section 09 90 00. (Up to 10 Feet High)**				
B01401	Painted and Unpainted Surfaces	10,000	SF		
B01402	Additive Cost for Patching and Taping	5,000	SF		
B01403	MPI 50, Latex, Primer Sealer	1,500	SF		
B01404	MPI 138, High Performance Latex, Flat, Finished Coat	1,000	SF		
B01405	MPI 141, High Performance Latex, Semi Gloss, Finished Coat	100,000	SF		
B01406	MPI 47, Alkyd, Semi Gloss, Finished Coat	1,000	SF		
B01407	Additive Cost for Line Items A014 Over 10 Feet High	10,000	SF		
B015	**Provide Pipe Identification in Accordance with Section 09 90 00. (Mil-Std-101)**				
B01501	Pipes Up to 4-Inch Diameter	1,000	LF		
B01502	Pipes Over 4-Inch Diameter	850	LF		
B016	**Trim Trees and Shrubs Obstructing the Painting Operation in Accordance with Section 09 90 00.**				
B01601	Up to 10-Feet High	1,000	LF		
B01602	Over 10-Feet High	500	LF		
B017	**Remove and Dispose Lead Containing Paint on Accordance with Section 02 83 19.00 10.**				
B01701	Up to 10-Feet High	15,000	SF		
B01702	Over 10-Feet High	5,000	SF		

A.	B. Reference of Document Being Continuted	C. PAGE
Exhibit B	**N40192-15-R-2900**	

D NAME OF OFFEROR OR CONTRACTOR

E ELIN NO.	F SERVICES	G ESTIMATED QUANTITY	H UNIT	I UNIT PRICE	J AMOUNT
B018	**Pavement/Curb Markings: Surface Preparation and Painting in Accordance with Section 32 17 24.00 10**				
B01801	4-Inch Wide, White, Yellow, or Red	10,000	LF		
B01802	6-Inch Wide, White, Yellow, or Red	5,000	LF		
B01803	8-Inch Wide, White, Yellow, or Red	2,000	LF		
B01804	12-Inch Wide, White, Yellow, or Red	1,000	LF		
B019	**Pavement Markings: Surface Preparation and Painting of Handicap Logo**				
B01901	Handicap Logo, White	50	EA		
B020	**Paint Building Numbers or Letters in Accordance with Section 09 90 00**				
B02001	4" to 8" High	6,000	EA		
B02002	8-1/2" to 16" High	1,000	EA		
B02003	16-1/2" to 24" High	50	EA		
B02004	24-1/2" to 36" High	50	EA		
B02005	36-1/2" to 48" High	50	EA		
B02006	48-1/2" to 60" High	20	EA		
B02007	60-1/2" to 72" High	20	EA		

TOTAL PRICE (ELIN B001 THRU B020)

First Option Period

A.	B. Reference of Document Being Continuted	C. PAGE
Exhibit C	**N40192-15-R-2900**	

D NAME OF OFFEROR OR CONTRACTOR

E ELIN NO.	F SERVICES	G ESTIMATED QUANTITY	H UNIT	I UNIT PRICE	J AMOUNT
	IDIQ CONTRACT FOR PAINTING CONSTRUCTION SERVICES VARIOUS LOCATIONS, GUAM				
	CONTRACT RATE SCHEDULE - SECOND OPTION PERIOD INDEFINITE QUANTITY WORK			Unit Price	Total Amount
C001	**Repair Concrete Cracks in Accordance with Section 03 01 30.71**				
C00101	Up to 10 Feet High	40,000	LF		
C00102	Over 10 Feet High	12,000	LF		
C002	**Repair Concrete Spalls in Accordance with Section 03 01 30.71**				
C00201	Up to 10 Feet High)	24,000	SF		
C00202	Over 10 Feet High)	6,000	SF		
C003	**Repair Metal Flashing or any Sheet Metal Attached to Exterior of Building in Accordance with Section 07 60 00.**				
C00301	Galvanized Steel	6,000	SF		
C00302	Stainless Steel	3,000	SF		
C00303	Aluminum	300	SF		
C00304	Copper	200	SF		
C00305	Terne-Coated Stainless	150	SF		
C004	**Replace Rain Gutter or Downspout in Accordance with Section 07 60 00.**				
C00401	Galvanized Steel	6,000	LF		
C00402	Stainless Steel	3,000	LF		
C00403	Aluminum	300	LF		
C00404	Copper	500	LF		
C00405	Terne-Coated Stainless	200	LF		
C005	**Align and Resecure Metal Flashing, Rain Gutter, Downspout or and Sheet Metal Component Attached to Building in Accordance with Section 07 60 00.**				
C00501	Up to 10 Feet High	1,000	SF		
C00502	Over 10 Feet High	2,500	SF		
C006	**Waterblast in Accordance with Section 09 90 00.**				
C00601	Up to 10 Feet High	8,000,000	SF		
C00602	Over 10 Feet High	4,000,000	SF		
C007	**Caulk Exterior/Interior Joint in Accordance with Section 07 92 00.**				
C00701	Up to 10 Feet High	100,000	LF		
C00702	Over 10 Feet High	30,000	LF		
C008	**Exterior Metal Surfaces: Surface Preparation and Painting in Accordance with Section 09 90 00. (Up to 10 Feet High)**				
C00801	Surface Preparation (SSPC SP 2) Hand Tool Cleaning	150,000	SF		
C00802	Surface Preparation (SSPC SP 3) Power Tool Cleaning	10,000	SF		
C00803	MPI 23, Metal Primer	50,000	SF		
C00804	MPI 79, Metal Primer, Alkyd	1,000	SF		
C00805	MPI 134, Galvanized Primer, Water Base	20,000	SF		
C00806	MPI 101, Epoxy Anti Corrosive Metal Primer	2,000	SF		
C00807	MPI 94, Alkyd, Semi Gloss, Finished Coat	1,000	SF		
C00808	MPI 22, Aluminum Heat-Resisting, Up to 1100 deg F)	500	SF		
C00809	MPI 10, Exterior Latex Flat, Finish Coat,	1,000	SF		
C00810	MPI 11, Latex, Semi Gloss, Finish Coat,	200,000	SF		
C00811	MPI 110, Water Based Light Industrial, Eggshell, Semi Gloss, and Gloss Finished Coat	50,000	SF		
C00812	MPI 95, Quick Drying Primer for Aluminum	1,000	SF		

A.	B. Reference of Document Being Continuted	C. PAGE
Exhibit C	**N40192-15-R-2900**	

D NAME OF OFFEROR OR CONTRACTOR

E ELIN NO.	F SERVICES	G ESTIMATED QUANTITY	H UNIT	I UNIT PRICE	J AMOUNT
C00813	DOD-C-24667, Coating System, Nonskid, for Roll or Spray Application, Finish Coat	5,000	SF		
C00814	Additive for Aggregate (Textured Coating)	2,000	SF		
C00815	Additive Cost for Line Items A008 Over 10 Feet high	150,000	SF		
C009	**Exterior Concrete and Cementitious Surfaces: Preparation and Painting in Accordance with Section 09 90 00. (Up to 10 Feet High)**				
C00901	Surface Preparation, Unpainted Surfaces	5,000	SF		
C00902	Surface Preparation, Painted Surfaces	5,000,000	SF		
C00903	Remove Efflorescence	5,000	SF		
C00904	MPI 4, Interior/Exterior Latex Block Filler	3,000	SF		
C00905	MPI 10, Exterior Latex, Flat, Primer Coat	30,000	SF		
C00906	MPI 11, Exterior Latex, Semi Gloss, Primer Coat	60,000	SF		
C00907	MPI 42, Latex, Textured Primer	80,000	SF		
C00908	MPI 10, Latex, Flat, Finished Coat	30,000	SF		
C00909	MPI 11, Latex, Semi Gloss, Finished Coat	5,000,000	SF		
C00910	SSPC 18, for Swimming Pool	5,000	SF		
C00911	DOD-C-24667, Coating System, Nonskid, for Roll or Spray Application, Finish Coat	100,000	SF		
C00912	Additive for Aggregate (Textured Coating)	100,000	SF		
C00913	Anti Graffiti Paint: Surface Preparation and Complete Painting	100,000	SF		
C00914	Additive Cost for line Items A009 Over 10 Feet High	300,000	SF		
C010	**Exterior Wood, Dressed Lumber, and Paneling Surfaces: Surface Preparation and Painting in Accordance with Section 09 90 00. (Up to 10 Feet High)**				
C01001	Surface Preparation, Unpainted or Painted Surfaces	3,000	SF		
C01002	MPI 7, Exterior Oil Wood Primer	200	SF		
C01003	MPI 5, Alkyd Wood Primer	500	SF		
C01004	MPI 6, Latex Wood Primer	3,000	SF		
C01005	MPI 94, Alkyd, Semi Gloss, Finished Coat	1,000	SF		
C01006	MPI 10, Latex, Flat, Finished Coat	1,000	SF		
C01007	MPI 11, Latex, Semi Gloss, Finished Coat	4,000	SF		
C01008	Additive Cost for Line Items A010 Over 10 Feet High	2,000	SF		
C011	**Interior Concrete and Cementitious Surfaces: Preparation and Painting in Accordance with Section 09 90 00. (Up to 10 Feet High)**				
C01101	Surface Preparation, Unpainted Surfaces	5,000	SF		
C01102	Surface Preparation, Painted Surfaces	100,000	SF		
C01103	MPI 50, Latex Primer Sealer	10,000	SF		
C01104	MPI 10, Latex Primer, Flat	10,000	SF		
C01105	MPI 11, Latex, Primer, Semi Gloss	70,000	SF		
C01106	MPI 110, Water Base Primer, Eggshell, Semi Gloss, and Gloss	5,000	SF		
C01107	MPI 4, Interior/Exterior Latex Block Filler	2,000	SF		
C01108	MPI 10, Latex, Flat, Finished Coat	10,000	SF		
C01109	MPI 11, Latex, Semi Gloss, Finished Coat	100,000	SF		
C01110	MPI 52, Latex, Eggshell, Finished Coat	2,000	SF		
C01111	MPI 54, Latex, Semi Gloss, Finished Coat	2,000	SF		
C01112	MPI 110, Water Base, Eggshell, Semi Gloss, and Gloss, Finished Coat	5,000	SF		
C01113	MPI 60, Interior/Exterior Latex, Floor Paint	1,000	SF		
C01114	MPI 138, High Performance Latex, Flat, Finished Coat	10,000	SF		
C01115	MPI 139, High Performance Latex, Eggshell, Finished Coat	1,000	SF		
C01116	MPI 141, High Performance Latex, Semi Gloss, Finished Coat	5,000	SF		
C01117	Additive Cost for Line Items A011 Over 10 Feet High	3,000	SF		

A.	B. Reference of Document Being Continuted	C. PAGE
Exhibit C	**N40192-15-R-2900**	

D NAME OF OFFEROR OR CONTRACTOR

E ELIN NO.	F SERVICES	G ESTIMATED QUANTITY	H UNIT	I UNIT PRICE	J AMOUNT
C012	**Interior Metal Surfaces: Surface Preparation and Painting in Accordance with Section 09 90 00. (Up to 10 Feet High)**				
C01201	Surface Preparation (SSPC SP 2) Hand Tool Cleaning	1,500	SF		
C01202	Surface Preparation (SSPC SP 3) Power Tool Cleaning	200	SF		
C01203	MPI 79, Alkyd Metal Primer	300	SF		
C01204	MPI 95, Primer for Aluminum	200	SF		
C01205	MPI 2, Heat-Resisting (Up to 1100 deg F)	200	SF		
C01206	MPI 139, High Performance Latex, Eggshell, Finished Coat	500	SF		
C01207	MPI 27, Interior/Exterior Floor Enamel Plus Nonskid Additive	500	SF		
C01208	MPI 51, Alkyd, Eggshell, Finished Coat	100	SF		
C01209	MPI 47, Alkyd, Semi Gloss, Finished Coat	300	SF		
C01210	MPI 141, High Performance Latex, Semi Gloss, Finished Coat	30,000	SF		
C01211	Additive Cost for Line Items A012 Over 10 Feet high	3,000	SF		
C013	**Interior Wood Surfaces: Surface Preparation and Painting in Accordance with Section 09 90 00. (Up to 10 Feet High)**				
C01301	Surface Preparation; Painted and Unpainted Surfaces	1,000	SF		
C01302	Additive Cost for Patching	300	SF		
C01303	MPI 39, Latex Based Wood Primer	2,000	SF		
C01304	MPI 45, Alkyd Primer Sealer	500	SF		
C01305	MPI 46, Enamel Under Coat	200	SF		
C01306	MPI 90, Urethane Clear Satin	1,000	SF		
C01307	MPI 139, Finished Coat, Latex, Eggshell	200	SF		
C01308	MPI 141, Finished Coat, Latex, Semi Gloss	7,000	SF		
C01309	MPI 51, Finished Coat, Alkyd, Eggshell	500	SF		
C01310	MPI 47, Finished Coat, Alkyd, Semi Gloss	200	SF		
C01311	MPI 57, Urethane Clear Satin	1,000	SF		
C01312	MPI 90, Wood Stain	1,000	SF		
C01313	MPI 31, Clear Gloss for Wood Surfaces	1,500	SF		
C01314	MPI 110, Water Base Light Industrial Coating, Eggshell, Semi Gloss, and Gloss	2,000	SF		
C01315	Additive Cost for Line Items A013 Over 10 Feet high	2,500	SF		
C014	**Interior Plaster, Gypsum Board, and Textured Surfaces: Surface Preparation and Painting in Accordance with Section 09 90 00. (Up to 10 Feet High)**				
C01401	Painted and Unpainted Surfaces	10,000	SF		
C01402	Additive Cost for Patching and Taping	5,000	SF		
C01403	MPI 50, Latex, Primer Sealer	1,500	SF		
C01404	MPI 138, High Performance Latex, Flat, Finished Coat	1,000	SF		
C01405	MPI 141, High Performance Latex, Semi Gloss, Finished Coat	100,000	SF		
C01406	MPI 47, Alkyd, Semi Gloss, Finished Coat	1,000	SF		
C01407	Additive Cost for Line Items A014 Over 10 Feet High	10,000	SF		
C015	**Provide Pipe Identification in Accordance with Section 09 90 00. (Mil-Std-101)**				
C01501	Pipes Up to 4-Inch Diameter	1,000	LF		
C01502	Pipes Over 4-Inch Diameter	850	LF		
C016	**Trim Trees and Shrubs Obstructing the Painting Operation in Accordance with Section 09 90 00.**				
C01601	Up to 10-Feet High	1,000	LF		
C01602	Over 10-Feet High	500	LF		
C017	**Remove and Dispose Lead Containing Paint on Accordance with Section 02 83 19.00 10.**				
C01701	Up to 10-Feet High	15,000	SF		
C01702	Over 10-Feet High	5,000	SF		

A.	B. Reference of Document Being Continuted	C. PAGE
Exhibit C	**N40192-15-R-2900**	

D NAME OF OFFEROR OR CONTRACTOR

E ELIN NO.	F SERVICES	G ESTIMATED QUANTITY	H UNIT	I UNIT PRICE	J AMOUNT
C018	**Pavement/Curb Markings: Surface Preparation and Painting in Accordance with Section 32 17 24.00 10**				
C01801	4-Inch Wide, White, Yellow, or Red	10,000	LF		
C01802	6-Inch Wide, White, Yellow, or Red	5,000	LF		
C01803	8-Inch Wide, White, Yellow, or Red	2,000	LF		
C01804	12-Inch Wide, White, Yellow, or Red	1,000	LF		
C019	**Pavement Markings: Surface Preparation and Painting of Handicap Logo**				
C01901	Handicap Logo, White	50	EA		
C020	**Paint Building Numbers or Letters in Accordance with Section 09 90 00**				
C02001	4" to 8" High	6,000	EA		
C02002	8-1/2" to 16" High	1,000	EA		
C02003	16-1/2" to 24" High	50	EA		
C02004	24-1/2" to 36" High	50	EA		
C02005	36-1/2" to 48" High	50	EA		
C02006	48-1/2" to 60" High	20	EA		
C02007	60-1/2" to 72" High	20	EA		

TOTAL PRICE (ELIN C001 THRU C020)

Second Option Perioc

A.	B. Reference of Document Being Continuted	C. PAGE
Exhibit D	**N40192-15-R-2900**	

D NAME OF OFFEROR OR CONTRACTOR

E ELIN NO.	F SERVICES	G ESTIMATED QUANTITY	H UNIT	I UNIT PRICE	J AMOUNT
	IDIQ CONTRACT FOR PAINTING CONSTRUCTION SERVICES VARIOUS LOCATIONS, GUAM				
	CONTRACT RATE SCHEDULE - THIRD OPTION PERIOD INDEFINITE QUANTITY WORK			Unit Price	Total Amount
D001	**Repair Concrete Cracks in Accordance with Section 03 01 30.71**				
D00101	Up to 10 Feet High	40,000	LF		
D00102	Over 10 Feet High	12,000	LF		
D002	**Repair Concrete Spalls in Accordance with Section 03 01 30.71**				
D00201	Up to 10 Feet High)	24,000	SF		
D00202	Over 10 Feet High)	6,000	SF		
D003	**Repair Metal Flashing or any Sheet Metal Attached to Exterior of Building in Accordance with Section 07 60 00.**				
D00301	Galvanized Steel	6,000	SF		
D00302	Stainless Steel	3,000	SF		
D00303	Aluminum	300	SF		
D00304	Copper	200	SF		
D00305	Terne-Coated Stainless	150	SF		
D004	**Replace Rain Gutter or Downspout in Accordance with Section 07 60 00.**				
D00401	Galvanized Steel	6,000	LF		
D00402	Stainless Steel	3,000	LF		
D00403	Aluminum	300	LF		
D00404	Copper	500	LF		
D00405	Terne-Coated Stainless	200	LF		
D005	**Align and Resecure Metal Flashing, Rain Gutter, Downspout or and Sheet Metal Component Attached to Building in Accordance with Section 07 60 00.**				
D00501	Up to 10 Feet High	1,000	SF		
D00502	Over 10 Feet High	2,500	SF		
D006	**Waterblast in Accordance with Section 09 90 00.**				
D00601	Up to 10 Feet High	8,000,000	SF		
D00602	Over 10 Feet High	4,000,000	SF		
D007	**Caulk Exterior/Interior Joint in Accordance with Section 07 92 00.**				
D00701	Up to 10 Feet High	100,000	LF		
D00702	Over 10 Feet High	30,000	LF		
D008	**Exterior Metal Surfaces: Surface Preparation and Painting in Accordance with Section 09 90 00. (Up to 10 Feet High)**				
D00801	Surface Preparation (SSPC SP 2) Hand Tool Cleaning	150,000	SF		
D00802	Surface Preparation (SSPC SP 3) Power Tool Cleaning	10,000	SF		
D00803	MPI 23, Metal Primer	50,000	SF		
D00804	MPI 79, Metal Primer, Alkyd	1,000	SF		
D00805	MPI 134, Galvanized Primer, Water Base	20,000	SF		
D00806	MPI 101, Epoxy Anti Corrosive Metal Primer	2,000	SF		
D00807	MPI 94, Alkyd, Semi Gloss, Finished Coat	1,000	SF		
D00808	MPI 22, Aluminum Heat-Resisting, Up to 1100 deg F)	500	SF		
D00809	MPI 10, Exterior Latex Flat, Finish Coat,	1,000	SF		
D00810	MPI 11, Latex, Semi Gloss, Finish Coat,	200,000	SF		
D00811	MPI 110, Water Based Light Industrial, Eggshell, Semi Gloss, and Gloss Finished Coat	50,000	SF		
D00812	MPI 95, Quick Drying Primer for Aluminum	1,000	SF		

D NAME OF OFFEROR OR CONTRACTOR

E ELIN NO.	F SERVICES	G ESTIMATED QUANTITY	H UNIT	I UNIT PRICE	J AMOUNT
D00813	DOD-C-24667, Coating System, Nonskid, for Roll or Spray Application, Finish Coat	5,000	SF		
D00814	Additive for Aggregate (Textured Coating)	2,000	SF		
D00815	Additive Cost for Line Items A008 Over 10 Feet high	150,000	SF		
D009	**Exterior Concrete and Cementitious Surfaces: Preparation and Painting in Accordance with Section 09 90 00. (Up to 10 Feet High)**				
D00901	Surface Preparation, Unpainted Surfaces	5,000	SF		
D00902	Surface Preparation, Painted Surfaces	5,000,000	SF		
D00903	Remove Efflorescence	5,000	SF		
D00904	MPI 4, Interior/Exterior Latex Block Filler	3,000	SF		
D00905	MPI 10, Exterior Latex, Flat, Primer Coat	30,000	SF		
D00906	MPI 11, Exterior Latex, Semi Gloss, Primer Coat	60,000	SF		
D00907	MPI 42, Latex, Textured Primer	80,000	SF		
D00908	MPI 10, Latex, Flat, Finished Coat	30,000	SF		
D00909	MPI 11, Latex, Semi Gloss, Finished Coat	5,000,000	SF		
D00910	SSPC 18, for Swimming Pool	5,000	SF		
D00911	DOD-C-24667, Coating System, Nonskid, for Roll or Spray Application, Finish Coat	100,000	SF		
D00912	Additive for Aggregate (Textured Coating)	100,000	SF		
D00913	Anti Graffiti Paint: Surface Preparation and Complete Painting	100,000	SF		
D00914	Additive Cost for line Items A009 Over 10 Feet High	300,000	SF		
D010	**Exterior Wood, Dressed Lumber, and Paneling Surfaces: Surface Preparation and Painting in Accordance with Section 09 90 00. (Up to 10 Feet High)**				
D01001	Surface Preparation, Unpainted or Painted Surfaces	3,000	SF		
D01002	MPI 7, Exterior Oil Wood Primer	200	SF		
D01003	MPI 5, Alkyd Wood Primer	500	SF		
D01004	MPI 6, Latex Wood Primer	3,000	SF		
D01005	MPI 94, Alkyd, Semi Gloss, Finished Coat	1,000	SF		
D01006	MPI 10, Latex, Flat, Finished Coat	1,000	SF		
D01007	MPI 11, Latex, Semi Gloss, Finished Coat	4,000	SF		
D01008	Additive Cost for Line Items A010 Over 10 Feet High	2,000	SF		
D011	**Interior Concrete and Cementitious Surfaces: Preparation and Painting in Accordance with Section 09 90 00. (Up to 10 Feet High)**				
D01101	Surface Preparation, Unpainted Surfaces	5,000	SF		
D01102	Surface Preparation, Painted Surfaces	100,000	SF		
D01103	MPI 50, Latex Primer Sealer	10,000	SF		
D01104	MPI 10, Latex Primer, Flat	10,000	SF		
D01105	MPI 11, Latex, Primer, Semi Gloss	70,000	SF		
D01106	MPI 110, Water Base Primer, Eggshell, Semi Gloss, and Gloss	5,000	SF		
D01107	MPI 4, Interior/Exterior Latex Block Filler	2,000	SF		
D01108	MPI 10, Latex, Flat, Finished Coat	10,000	SF		
D01109	MPI 11, Latex, Semi Gloss, Finished Coat	100,000	SF		
D01110	MPI 52, Latex, Eggshell, Finished Coat	2,000	SF		
D01111	MPI 54, Latex, Semi Gloss, Finished Coat	2,000	SF		
D01112	MPI 110, Water Base, Eggshell, Semi Gloss, and Gloss, Finished Coat	5,000	SF		
D01113	MPI 60, Interior/Exterior Latex, Floor Paint	1,000	SF		
D01114	MPI 138, High Performance Latex, Flat, Finished Coat	10,000	SF		
D01115	MPI 139, High Performance Latex, Eggshell, Finished Coat	1,000	SF		
D01116	MPI 141, High Performance Latex, Semi Gloss, Finished Coat	5,000	SF		
D01117	Additive Cost for Line Items A011 Over 10 Feet High	3,000	SF		

A.	B. Reference of Document Being Continuted	C. PAGE
Exhibit D	**N40192-15-R-2900**	

D NAME OF OFFEROR OR CONTRACTOR

E ELIN NO.	F SERVICES	G ESTIMATED QUANTITY	H UNIT	I UNIT PRICE	J AMOUNT
D012	**Interior Metal Surfaces: Surface Preparation and Painting in Accordance with Section 09 90 00. (Up to 10 Feet High)**				
D01201	Surface Preparation (SSPC SP 2) Hand Tool Cleaning	1,500	SF		
D01202	Surface Preparation (SSPC SP 3) Power Tool Cleaning	200	SF		
D01203	MPI 79, Alkyd Metal Primer	300	SF		
D01204	MPI 95, Primer for Aluminum	200	SF		
D01205	MPI 2, Heat-Resisting (Up to 1100 deg F)	200	SF		
D01206	MPI 139, High Performance Latex, Eggshell, Finished Coat	500	SF		
D01207	MPI 27, Interior/Exterior Floor Enamel Plus Nonskid Additive	500	SF		
D01208	MPI 51, Alkyd, Eggshell, Finished Coat	100	SF		
D01209	MPI 47, Alkyd, Semi Gloss, Finished Coat	300	SF		
D01210	MPI 141, High Performance Latex, Semi Gloss, Finished Coat	30,000	SF		
D01211	Additive Cost for Line Items A012 Over 10 Feet high	3,000	SF		
D013	**Interior Wood Surfaces: Surface Preparation and Painting in Accordance with Section 09 90 00. (Up to 10 Feet High)**				
D01301	Surface Preparation; Painted and Unpainted Surfaces	1,000	SF		
D01302	Additive Cost for Patching	300	SF		
D01303	MPI 39, Latex Based Wood Primer	2,000	SF		
D01304	MPI 45, Alkyd Primer Sealer	500	SF		
D01305	MPI 46, Enamel Under Coat	200	SF		
D01306	MPI 90, Urethane Clear Satin	1,000	SF		
D01307	MPI 139, Finished Coat, Latex, Eggshell	200	SF		
D01308	MPI 141, Finished Coat, Latex, Semi Gloss	7,000	SF		
D01309	MPI 51, Finished Coat, Alkyd, Eggshell	500	SF		
D01310	MPI 47, Finished Coat, Alkyd, Semi Gloss	200	SF		
D01311	MPI 57, Urethane Clear Satin	1,000	SF		
D01312	MPI 90, Wood Stain	1,000	SF		
D01313	MPI 31, Clear Gloss for Wood Surfaces	1,500	SF		
D01314	MPI 110, Water Base Light Industrial Coating, Eggshell, Semi Gloss, and Gloss	2,000	SF		
D01315	Additive Cost for Line Items A013 Over 10 Feet high	2,500	SF		
D014	**Interior Plaster, Gypsum Board, and Textured Surfaces: Surface Preparation and Painting in Accordance with Section 09 90 00. (Up to 10 Feet High)**				
D01401	Painted and Unpainted Surfaces	10,000	SF		
D01402	Additive Cost for Patching and Taping	5,000	SF		
D01403	MPI 50, Latex, Primer Sealer	1,500	SF		
D01404	MPI 138, High Performance Latex, Flat, Finished Coat	1,000	SF		
D01405	MPI 141, High Performance Latex, Semi Gloss, Finished Coat	100,000	SF		
D01406	MPI 47, Alkyd, Semi Gloss, Finished Coat	1,000	SF		
D01407	Additive Cost for Line Items A014 Over 10 Feet High	10,000	SF		
D015	**Provide Pipe Identification in Accordance with Section 09 90 00. (Mil-Std-101)**				
D01501	Pipes Up to 4-Inch Diameter	1,000	LF		
D01502	Pipes Over 4-Inch Diameter	850	LF		
D016	**Trim Trees and Shrubs Obstructing the Painting Operation in Accordance with Section 09 90 00.**				
D01601	Up to 10-Feet High	1,000	LF		
D01602	Over 10-Feet High	500	LF		
D017	**Remove and Dispose Lead Containing Paint on Accordance with Section 02 83 19.00 10.**				
D01701	Up to 10-Feet High	15,000	SF		
D01702	Over 10-Feet High	5,000	SF		

A.	B. Reference of Document Being Continuted	C. PAGE
Exhibit D	**N40192-15-R-2900**	

D NAME OF OFFEROR OR CONTRACTOR

E ELIN NO.	F SERVICES	G ESTIMATED QUANTITY	H UNIT	I UNIT PRICE	J AMOUNT
D018	**Pavement/Curb Markings: Surface Preparation and Painting in Accordance with Section 32 17 24.00 10**				
D01801	4-Inch Wide, White, Yellow, or Red	10,000	LF		
D01802	6-Inch Wide, White, Yellow, or Red	5,000	LF		
D01803	8-Inch Wide, White, Yellow, or Red	2,000	LF		
D01804	12-Inch Wide, White, Yellow, or Red	1,000	LF		
D019	**Pavement Markings: Surface Preparation and Painting of Handicap Logo**				
D01901	Handicap Logo, White	50	EA		
D020	**Paint Building Numbers or Letters in Accordance with Section 09 90 00**				
D02001	4" to 8" High	6,000	EA		
D02002	8-1/2" to 16" High	1,000	EA		
D02003	16-1/2" to 24" High	50	EA		
D02004	24-1/2" to 36" High	50	EA		
D02005	36-1/2" to 48" High	50	EA		
D02006	48-1/2" to 60" High	20	EA		
D02007	60-1/2" to 72" High	20	EA		

TOTAL PRICE (ELIN D001 THRU D020)

Third Option Period

A.	B. Reference of Document Being Continuted	C. PAGE
Exhibit E	**N40192-15-R-2900**	

D NAME OF OFFEROR OR CONTRACTOR

E ELIN NO.	F SERVICES	G ESTIMATED QUANTITY	H UNIT	I UNIT PRICE	J AMOUNT
	IDIQ CONTRACT FOR PAINTING CONSTRUCTION SERVICES VARIOUS LOCATIONS, GUAM				
	CONTRACT RATE SCHEDULE - FOURTH OPTION PERIOD INDEFINITE QUANTITY WORK			Unit Price	Total Amount
E001	**Repair Concrete Cracks in Accordance with Section 03 01 30.71**				
E00101	Up to 10 Feet High	40,000	LF		
E00102	Over 10 Feet High	12,000	LF		
E002	**Repair Concrete Spalls in Accordance with Section 03 01 30.71**				
E00201	Up to 10 Feet High)	24,000	SF		
E00202	Over 10 Feet High)	6,000	SF		
E003	**Repair Metal Flashing or any Sheet Metal Attached to Exterior of Building in Accordance with Section 07 60 00.**				
E00301	Galvanized Steel	6,000	SF		
E00302	Stainless Steel	3,000	SF		
E00303	Aluminum	300	SF		
E00304	Copper	200	SF		
E00305	Terne-Coated Stainless	150	SF		
E004	**Replace Rain Gutter or Downspout in Accordance with Section 07 60 00.**				
E00401	Galvanized Steel	6,000	LF		
E00402	Stainless Steel	3,000	LF		
E00403	Aluminum	300	LF		
E00404	Copper	500	LF		
E00405	Terne-Coated Stainless	200	LF		
E005	**Align and Resecure Metal Flashing, Rain Gutter, Downspout or and Sheet Metal Component Attached to Building in Accordance with Section 07 60 00.**				
E00501	Up to 10 Feet High	1,000	SF		
E00502	Over 10 Feet High	2,500	SF		
E006	**Waterblast in Accordance with Section 09 90 00.**				
E00601	Up to 10 Feet High	8,000,000	SF		
E00602	Over 10 Feet High	4,000,000	SF		
E007	**Caulk Exterior/Interior Joint in Accordance with Section 07 92 00.**				
E00701	Up to 10 Feet High	100,000	LF		
E00702	Over 10 Feet High	30,000	LF		
E008	**Exterior Metal Surfaces: Surface Preparation and Painting in Accordance with Section 09 90 00. (Up to 10 Feet High)**				
E00801	Surface Preparation (SSPC SP 2) Hand Tool Cleaning	150,000	SF		
E00802	Surface Preparation (SSPC SP 3) Power Tool Cleaning	10,000	SF		
E00803	MPI 23, Metal Primer	50,000	SF		
E00804	MPI 79, Metal Primer, Alkyd	1,000	SF		
E00805	MPI 134, Galvanized Primer, Water Base	20,000	SF		
E00806	MPI 101, Epoxy Anti Corrosive Metal Primer	2,000	SF		
E00807	MPI 94, Alkyd, Semi Gloss, Finished Coat	1,000	SF		
E00808	MPI 22, Aluminum Heat-Resisting, Up to 1100 deg F)	500	SF		
E00809	MPI 10, Exterior Latex Flat, Finish Coat,	1,000	SF		
E00810	MPI 11, Latex, Semi Gloss, Finish Coat,	200,000	SF		
E00811	MPI 110, Water Based Light Industrial, Eggshell, Semi Gloss, and Gloss Finished Coat	50,000	SF		
E00812	MPI 95, Quick Drying Primer for Aluminum	1,000	SF		

E ELIN NO.	F SERVICES	G ESTIMATED QUANTITY	H UNIT	I UNIT PRICE	J AMOUNT
E00813	DOD-C-24667, Coating System, Nonskid, for Roll or Spray Application, Finish Coat	5,000	SF		
E00814	Additive for Aggregate (Textured Coating)	2,000	SF		
E00815	Additive Cost for Line Items A008 Over 10 Feet high	150,000	SF		
E009	**Exterior Concrete and Cementitious Surfaces: Preparation and Painting in Accordance with Section 09 90 00. (Up to 10 Feet High)**				
E00901	Surface Preparation, Unpainted Surfaces	5,000	SF		
E00902	Surface Preparation, Painted Surfaces	5,000,000	SF		
E00903	Remove Efflorescence	5,000	SF		
E00904	MPI 4, Interior/Exterior Latex Block Filler	3,000	SF		
E00905	MPI 10, Exterior Latex, Flat, Primer Coat	30,000	SF		
E00906	MPI 11, Exterior Latex, Semi Gloss, Primer Coat	60,000	SF		
E00907	MPI 42, Latex, Textured Primer	80,000	SF		
E00908	MPI 10, Latex, Flat, Finished Coat	30,000	SF		
E00909	MPI 11, Latex, Semi Gloss, Finished Coat	5,000,000	SF		
E00910	SSPC 18, for Swimming Pool	5,000	SF		
E00911	DOD-C-24667, Coating System, Nonskid, for Roll or Spray Application, Finish Coat	100,000	SF		
E00912	Additive for Aggregate (Textured Coating)	100,000	SF		
E00913	Anti Graffiti Paint: Surface Preparation and Complete Painting	100,000	SF		
E00914	Additive Cost for line Items A009 Over 10 Feet High	300,000	SF		
E010	**Exterior Wood, Dressed Lumber, and Paneling Surfaces: Surface Preparation and Painting in Accordance with Section 09 90 00. (Up to 10 Feet High)**				
E01001	Surface Preparation, Unpainted or Painted Surfaces	3,000	SF		
E01002	MPI 7, Exterior Oil Wood Primer	200	SF		
E01003	MPI 5, Alkyd Wood Primer	500	SF		
E01004	MPI 6, Latex Wood Primer	3,000	SF		
E01005	MPI 94, Alkyd, Semi Gloss, Finished Coat	1,000	SF		
E01006	MPI 10, Latex, Flat, Finished Coat	1,000	SF		
E01007	MPI 11, Latex, Semi Gloss, Finished Coat	4,000	SF		
E01008	Additive Cost for Line Items A010 Over 10 Feet High	2,000	SF		
E011	**Interior Concrete and Cementitious Surfaces: Preparation and Painting in Accordance with Section 09 90 00. (Up to 10 Feet High)**				
E01101	Surface Preparation, Unpainted Surfaces	5,000	SF		
E01102	Surface Preparation, Painted Surfaces	100,000	SF		
E01103	MPI 50, Latex Primer Sealer	10,000	SF		
E01104	MPI 10, Latex Primer, Flat	10,000	SF		
E01105	MPI 11, Latex, Primer, Semi Gloss	70,000	SF		
E01106	MPI 110, Water Base Primer, Eggshell, Semi Gloss, and Gloss	5,000	SF		
E01107	MPI 4, Interior/Exterior Latex Block Filler	2,000	SF		
E01108	MPI 10, Latex, Flat, Finished Coat	10,000	SF		
E01109	MPI 11, Latex, Semi Gloss, Finished Coat	100,000	SF		
E01110	MPI 52, Latex, Eggshell, Finished Coat	2,000	SF		
E01111	MPI 54, Latex, Semi Gloss, Finished Coat	2,000	SF		
E01112	MPI 110, Water Base, Eggshell, Semi Gloss, and Gloss, Finished Coat	5,000	SF		
E01113	MPI 60, Interior/Exterior Latex, Floor Paint	1,000	SF		
E01114	MPI 138, High Performance Latex, Flat, Finished Coat	10,000	SF		
E01115	MPI 139, High Performance Latex, Eggshell, Finished Coat	1,000	SF		
E01116	MPI 141, High Performance Latex, Semi Gloss, Finished Coat	5,000	SF		
E01117	Additive Cost for Line Items A011 Over 10 Feet High	3,000	SF		

A.	B. Reference of Document Being Continuted	C. PAGE
Exhibit E	**N40192-15-R-2900**	

D NAME OF OFFEROR OR CONTRACTOR

E ELIN NO.	F SERVICES	G ESTIMATED QUANTITY	H UNIT	I UNIT PRICE	J AMOUNT
E012	**Interior Metal Surfaces: Surface Preparation and Painting in Accordance with Section 09 90 00. (Up to 10 Feet High)**				
E01201	Surface Preparation (SSPC SP 2) Hand Tool Cleaning	1,500	SF		
E01202	Surface Preparation (SSPC SP 3) Power Tool Cleaning	200	SF		
E01203	MPI 79, Alkyd Metal Primer	300	SF		
E01204	MPI 95, Primer for Aluminum	200	SF		
E01205	MPI 2, Heat-Resisting (Up to 1100 deg F)	200	SF		
E01206	MPI 139, High Performance Latex, Eggshell, Finished Coat	500	SF		
E01207	MPI 27, Interior/Exterior Floor Enamel Plus Nonskid Additive	500	SF		
E01208	MPI 51, Alkyd, Eggshell, Finished Coat	100	SF		
E01209	MPI 47, Alkyd, Semi Gloss, Finished Coat	300	SF		
E01210	MPI 141, High Performance Latex, Semi Gloss, Finished Coat	30,000	SF		
E01211	Additive Cost for Line Items A012 Over 10 Feet high	3,000	SF		
E013	**Interior Wood Surfaces: Surface Preparation and Painting in Accordance with Section 09 90 00. (Up to 10 Feet High)**				
E01301	Surface Preparation; Painted and Unpainted Surfaces	1,000	SF		
E01302	Additive Cost for Patching	300	SF		
E01303	MPI 39, Latex Based Wood Primer	2,000	SF		
E01304	MPI 45, Alkyd Primer Sealer	500	SF		
E01305	MPI 46, Enamel Under Coat	200	SF		
E01306	MPI 90, Urethane Clear Satin	1,000	SF		
E01307	MPI 139, Finished Coat, Latex, Eggshell	200	SF		
E01308	MPI 141, Finished Coat, Latex, Semi Gloss	7,000	SF		
E01309	MPI 51, Finished Coat, Alkyd, Eggshell	500	SF		
E01310	MPI 47, Finished Coat, Alkyd, Semi Gloss	200	SF		
E01311	MPI 57, Urethane Clear Satin	1,000	SF		
E01312	MPI 90, Wood Stain	1,000	SF		
E01313	MPI 31, Clear Gloss for Wood Surfaces	1,500	SF		
E01314	MPI 110, Water Base Light Industrial Coating, Eggshell, Semi Gloss, and Gloss	2,000	SF		
E01315	Additive Cost for Line Items A013 Over 10 Feet high	2,500	SF		
E014	**Interior Plaster, Gypsum Board, and Textured Surfaces: Surface Preparation and Painting in Accordance with Section 09 90 00. (Up to 10 Feet High)**				
E01401	Painted and Unpainted Surfaces	10,000	SF		
E01402	Additive Cost for Patching and Taping	5,000	SF		
E01403	MPI 50, Latex, Primer Sealer	1,500	SF		
E01404	MPI 138, High Performance Latex, Flat, Finished Coat	1,000	SF		
E01405	MPI 141, High Performance Latex, Semi Gloss, Finished Coat	100,000	SF		
E01406	MPI 47, Alkyd, Semi Gloss, Finished Coat	1,000	SF		
E01407	Additive Cost for Line Items A014 Over 10 Feet High	10,000	SF		
E015	**Provide Pipe Identification in Accordance with Section 09 90 00. (Mil-Std-101)**				
E01501	Pipes Up to 4-Inch Diameter	1,000	LF		
E01502	Pipes Over 4-Inch Diameter	850	LF		
E016	**Trim Trees and Shrubs Obstructing the Painting Operation in Accordance with Section 09 90 00.**				
E01601	Up to 10-Feet High	1,000	LF		
E01602	Over 10-Feet High	500	LF		
E017	**Remove and Dispose Lead Containing Paint on Accordance with Section 02 83 19.00 10.**				
E01701	Up to 10-Feet High	15,000	SF		
E01702	Over 10-Feet High	5,000	SF		

A.	B. Reference of Document Being Continuted	C. PAGE
Exhibit E	**N40192-15-R-2900**	

D NAME OF OFFEROR OR CONTRACTOR

E ELIN NO.	F SERVICES	G ESTIMATED QUANTITY	H UNIT	I UNIT PRICE	J AMOUNT
E018	**Pavement/Curb Markings: Surface Preparation and Painting in Accordance with Section 32 17 24.00 10**				
E01801	4-Inch Wide, White, Yellow, or Red	10,000	LF		
E01802	6-Inch Wide, White, Yellow, or Red	5,000	LF		
E01803	8-Inch Wide, White, Yellow, or Red	2,000	LF		
E01804	12-Inch Wide, White, Yellow, or Red	1,000	LF		
E019	**Pavement Markings: Surface Preparation and Painting of Handicap Logo**				
E01901	Handicap Logo, White	50	EA		
E020	**Paint Building Numbers or Letters in Accordance with Section 09 90 00**				
E02001	4" to 8" High	6,000	EA		
E02002	8-1/2" to 16" High	1,000	EA		
E02003	16-1/2" to 24" High	50	EA		
E02004	24-1/2" to 36" High	50	EA		
E02005	36-1/2" to 48" High	50	EA		
E02006	48-1/2" to 60" High	20	EA		
E02007	60-1/2" to 72" High	20	EA		

TOTAL PRICE (ELIN E001 THRU E020)

Fourth Option Period

Solicitation No.
N40192-15-R-2900

PAINTING
INDEFINITE DELIVERY/INDEFINITE QUANTITY (IDIQ)

VARIOUS LOCATIONS, GUAM

PART II
GENERAL REQUIREMENTS

SECTION 01 11 00

SUMMARY OF WORK
08/11

PART 1 GENERAL

1.1 REFERENCES

The publications listed below form a part of this specification to the extent referenced. The publications are referred to within the text by the basic designation only.

ASTM INTERNATIONAL (ASTM)

ASTM E2114	(2008) Standard Terminology for Sustainability Relative to the Performance of Buildings

GREEN BUILDING INITIATIVE (GBI)

GBI/ANSI 01	(2010 Green Building Assessment Protocol for Commercial Buildings

U.S. ENVIRONMENTAL PROTECTION AGENCY (EPA)

Energy Star	(1992; R 2006) Energy Star Energy Efficiency Labeling System (FEMP)

U.S. GREEN BUILDING COUNCIL (USGBC)

LEED NC	(2009) Leadership in Energy and Environmental Design(tm) New Construction Rating System

1.2 DEFINITIONS

Definitions pertaining to sustainable development are as defined in ASTM E2114, Section 01 35 40.00 20 ENVIRONMENTAL MANAGEMENT, and as specified.

a. "Environmentally preferable products" have a lesser or reduced effect on the environment in comparison to conventional products and services. This comparison may consider raw materials acquisition, production, manufacturing, packaging, distribution, reuse, operation, maintenance, or disposal of the product.

b. "Indoor environmental quality" is the physical characteristics of the building interior that impact occupants, including air quality, illumination, acoustics, occupant control, thermal comfort, daylighting, and views.

c. "Operational performance" is the functional behavior of the building as a whole or of the building components.

d. "Sustainability" is the balance of environmental, economic, and societal considerations.

1.3 SUBMITTALS

Government approval is required for submittals with a "G" designation; submittals not having a "G" designation are for Contractor Quality Control approval. When used, a designation following the "G" designation identifies the office that will review the submittal for the Government. The following shall be submitted in accordance with Section 01 33 00 SUBMITTAL PROCEDURES:

SD-01 Preconstruction Submittals

Submit the following items to the Contracting Officer:

Utility Outage Requests
Utility Connection Requests

1.4 WORK COVERED BY CONTRACT DOCUMENTS

1.4.1 Project Description

This is an Indefinite Delivery / Indefinite Quantity Contract to obtain various painting and flashing systems, installations and repair work at rates set forth in the Schedule of Indefinite Quantity Work Items. The work includes all labor, safety controls, transportation, materials, equipment and supervision necessary to perform demolition, removal and repair of existing paint and flashing systems and installation of new paint and flashing systems, and incidental related work.

1.4.2 Location

The work shall be located at various Federal Government installations and buildings on Guam. The exact location will be indicated on the Task Order issued by the Contracting Officer.

1.5 CONTRACT DRAWINGS

Contract drawings will be attached in the task orders.

Contractor shall immediately check furnished drawings and notify the Government of any discrepancies.

1.6 WORK RESCHEDULING

Contractor shall allow for a maximum of 7 calendar days where construction activity is prohibitive. Government will provide 24 hour notification each time the restrictions are invoked.

Normal duty hours for work shall consist of an 8-hour period between 6:00 a.m. and 6:00 p.m., Monday through Friday, excluding Federal Government holidays. Requests for work outside regular working hours shall require written approval from the Contracting Officer 3 days in advance of the proposed work period to allow arrangements to be made by the Government. Based on the justification provided, the Contracting Officer may approve or disapprove work outside regular hours. Utility cutovers, if required, shall be made after normal working hours or on Saturdays, Sundays, and Federal Government holidays.

1.7 PROJECT ENVIRONMENTAL GOALS

Contractor shall distribute copies of the Environmental Goals to each subcontractor and the Contracting Officer. The overall goal for design, construction, and operation is to produce a building that meets the functional program needs and incorporates the principles of sustainability. Specifically:

a. Preserve and restore the site ecosystem and biodiversity; avoid site degradation and erosion. Minimize offsite environmental impact.

b. Use the minimum amount of energy, water, and materials feasible to meet the design intent. Select energy and water efficient equipment and strategies.

c. Use environmentally preferable products and decrease toxicity level of materials used.

d. Use renewable energy and material resources.

e. Optimize operational performance (through commissioning efforts) in order to ensure energy efficient equipment operates as intended. Consider the durability, maintainability, and flexibility of building systems.

f. Manage construction site and storage of materials to ensure no negative impact on the indoor environmental quality of the building.

g. Reduce construction waste through reuse, recycling, and supplier take-back.

1.8 OCCUPANCY OF PREMISES

Building(s) will be occupied during performance of work under this Contract. Occupancy notifications will be posted in a prominent location in the work area.

Before work is started, the Contractor shall arrange with the Contracting Officer a sequence of procedure, means of access, space for storage of materials and equipment, and use of approaches, corridors, and stairways.

1.9 EXISTING WORK

In addition to "FAR 52.236-9, Protection of Existing Vegetation, Structures, Equipment, Utilities, and Improvements":

a. Remove or alter existing work in such a manner as to prevent injury or damage to any portions of the existing work which remain.

b. Repair or replace portions of existing work which have been altered during construction operations to match existing or adjoining work, as approved by the Contracting Officer. At the completion of operations, existing work shall be in a condition equal to or better than that which existed before new work started.

1.10 ON-SITE PERMITS

1.10.1 Utility Outage Requests and Utility Connection Requests

Work shall be scheduled to hold outages to a minimum.

Utility outages and connections required during the prosecution of work that affect existing systems shall be arranged for at the convenience of the Government and shall be scheduled outside the regular working hours or on weekends.

Contractor shall not be entitled to additional payment for utility outages and connections required to be performed outside the regular work hours.

Requests for utility outages and connections shall be made in writing to the Contracting Officer at least five calendar days in advance of the time required. Each request shall state the system involved, area involved, approximate duration of outage, and the nature of work involved.

PART 2 PRODUCTS

Not used.

PART 3 EXECUTION

Not used.

-- End of Section --

SECTION 01 14 00

WORK RESTRICTIONS
11/11

PART 1 GENERAL

1.1 REFERENCES

The publications listed below form a part of this section to the extent referenced. The publications are referred to within the text by the basic designation only.

U.S. Code (USC)

10 USC 6011	Navy Regulations
8 USC 1101	Definitions

1.2 DEFINITIONS

1.2.1 State

"State" when used in reference to states of the United States shall also include the Territory of Guam.

1.3 SUBMITTALS

Government approval is required for submittals with a "G" designation; submittals not having a "G" designation are for Contractor Quality Control approval. When used, a designation following the "G" designation identifies the office that will review the submittal for the Government. The following shall be submitted in accordance with Section 01 33 00 SUBMITTAL PROCEDURES:

SD-01 Preconstruction Submittals

List of Contact Personnel; G

Personnel List; G

Vehicle List; G

Statement of Acknowledgement Form SF 1413; G

1.4 SPECIAL SCHEDULING REQUIREMENTS

a. Have materials, equipment, and personnel required to perform the work at the site prior to the commencement of the work.

b. The facilities will remain in operation during the entire construction period. The Contractor shall conduct his operations so as to cause the least possible interference with normal operations of the activity.

c. Permission to interrupt any Activity roads, railroads, and/or utility service shall be requested in writing a minimum of 15 calendar days prior to the desired date of interruption.

d. The work under this contract requires special attention to the scheduling and conduct of the work in connection with existing operations. Identify on the construction schedule each factor which constitutes a potential interruption to operations.

1.5 CONTRACTOR ACCESS AND USE OF PREMISES

1.5.1 Activity Regulations

Ensure that Contractor personnel employed on the Activity become familiar with and obey Activity regulations including safety, fire, traffic and security regulations. Keep within the limits of the work and avenues of ingress and egress. To minimize traffic congestion, delivery of materials shall be outside of peak traffic hours (6:30 to 8:00 a.m. and 3:30 to 5:00 p.m.) unless otherwise approved by the Contracting Officer. Wear hard hats in designated areas. Do not enter any restricted areas unless required to do so and until cleared for such entry. The Contractor's equipment shall be conspicuously marked for identification.

1.5.1.1 Subcontractors and Personnel Contacts

Furnish a list of contact personnel of the Contractor and subcontractors including addresses and telephone numbers for use in the event of an emergency. As changes occur and additional information becomes available, correct and change the information contained in previous lists.

1.5.1.2 Identification Badges and Installation Access

Application for and use of badges will be as directed. Obtain access to the installation by participating in the Navy Commercial Access Control System (NCACS), or by obtaining passes each day from the Base Pass and Identification Office. Costs for obtaining passes through the NCACS are the responsibility of the Contractor. One-day passes, issued through the Base Pass and Identification Office, will be furnished without charge. Furnish a completed EMPLOYMENT ELIGIBILITY VERIFICATION (DHS FORM I-9) form for all personnel requesting badges. This form is available at http://www.uscis.gov/portal/site/uscis by searching or selecting Employment Verification (Form I-9). Immediately report instances of lost or stolen badges to the Contracting Officer.

a. NCACS Program: NCACS is a voluntary program in which Contractor personnel who enroll, and are approved, are subsequently granted access to the installation for a period up to one year, or the length of the contract, whichever is less, and are not required to obtain a new pass from the Base Pass and Identification Office for each visit. The Government performs background screening and credentialing. Throughout the year the Contractor employee must continue to meet background screening standards. Periodic background screenings are conducted to verify continued NCACS participation and installation access privileges. Under the NCACS program, no commercial vehicle inspection is required, other than for Random Anti-Terrorism Measures (RAM) or in the case of an elevation of Force Protection Conditions (FPCON).Information on costs and requirements to participate and enroll in NCACS is available at http://www.rapidgate.com or by calling 1-877-727-4342. Contractors should be aware that the costs incurred to obtain NCACS credentials, or costs related to any means of access to a Navy Installation, are not

reimbursable. Any time invested, or price(s) paid, for obtaining NCACS credentials will not be compensated in any way or approved as a direct cost of any contract with the Department of the Navy.

b. One-Day Passes: Participation in the NCACS is not mandatory, and if the Contractor chooses to not participate, the Contractor's personnel will have to obtain daily passes, be subject to daily mandatory vehicle inspection, and will have limited access to the installation. The Government will not be responsible for any cost or lost time associated with obtaining daily passes or added vehicle inspections incurred by non-participants in the NCACS.

1.5.1.3 No Smoking Policy

Smoking is prohibited within and outside of all buildings on installations under the cognizance of NAVFAC Marianas except in designated smoking areas. This applies to existing buildings, buildings under construction and buildings under renovation. Discarding tobacco materials other than into designated tobacco receptacles is considered littering and is subject to fines. The Contracting Officer will identify designated smoking areas.

1.5.2 Andersen Air Force Base (AAFB) Regulations

Ensure that Contractor personnel employed on AAFB become familiar with and obey AAFB regulations. Wear hard hats in designated areas. Do not enter any restricted areas unless required to do so and until cleared for such entry. The Contractor's equipment shall be conspicuously marked for identification. Comply with the following conditions:

a. Restrict employees/representatives to the work site and control travel directly to and from the work site.

b. Restore all traffic/parking/security signs and markings, including space numbers, designations, and lines, to their original form if such signs/markings are defaced or deleted during construction/repair.

c. Be responsible for control and security of Contractor-owned equipment and materials at the work site. Report immediately missing/lost/stolen property to the AAFB Police Department (phone 671-366-6787) as each case occurs.

d. Ensure that no material is stacked within 10 feet of the Controlled Industrial Area (CIA) and runway perimeter. Remove from the work site, or secure ladders or other such equipment which could be used to climb the CIA and runway perimeter fence. Ensure that no vehicles are parked within 10 feet of the CIA and runway perimeter.

e. Ensure that no opening in the roof/walls/windows/fence of the building exist at the end of the work day and do not exist where penetration is possible during non-working hours. If the building cannot be secured at the end of the workday, coordinate action with the Contracting Office to notify the cognizant code to arrange for a security watch by their personnel.

f. Seventy-two hours prior to making any penetrations (such as tunneling under, cutting through a fence or building) in a restricted area, contact the AAFB Security Office to make arrangements for a security

guard or other measures required to meet all security requirements. Cost of security guard will be charged to the Contractor.

1.5.3 Working Hours

Regular working hours must consist of a period between 7:00 a.m. and 6:00 p.m., Monday through Friday, excluding Government holidays.

1.5.4 Work Outside Regular Hours

Work outside regular working hours requires Contracting Officer approval. Make application 15 calendar days prior to such work to allow arrangements to be made by the Government for inspecting the work in progress, giving the specific dates, hours, location, type of work to be performed, contract number and project title. Based on the justification provided, the Contracting Officer may approve work outside regular hours. During periods of darkness, the different parts of the work shall be lighted in a manner approved by the Contracting Officer. Make utility cutovers after normal working hours or on Saturdays, Sundays, and Government holidays unless directed otherwise.

1.5.5 Exclusionary Period

No work must be performed during ammunition loading and unloading and other operational activities, inclusive, without prior written approval of the Contracting Officer. This period has not been considered in computing the time allowed for the performance of this contract.

1.5.6 Occupied and Existing Buildings

The Contractor shall be working in and around existing buildings, which are occupied. Do not enter the buildings without prior approval of the Contracting Officer.

The existing buildings and their contents shall be kept secure at all times. Provide temporary closures as required to maintain security as directed by the Contracting Officer.

Provide dust covers or protective enclosures to protect existing work that remains and Government material during the construction period.

Relocate movable furniture away from the Contractor's working area as required to perform the work, protect the furniture, and replace the furniture in their original locations upon completion of the work. Leave attached equipment in place, and protect them against damage, or temporarily disconnect, relocate, protect, and reinstall them at the completion of the work.

1.5.7 Utility Cutovers and Interruptions

a. Make utility cutovers and interruptions after normal working hours or on Saturdays, Sundays, and Government holidays. Conform to procedures required in the paragraph "Work Outside Regular Hours."

b. Ensure that new utility lines are complete, except for the connection, before interrupting existing service.

c. Interruption to water, sanitary sewer, storm sewer, telephone service, electric service, air conditioning, heating, fire alarm, compressed air, and steam shall be considered utility cutovers pursuant to the paragraph entitled "Work Outside Regular Hours." Such interruption shall be further limited as directed by the Contracting Officer. This time limit includes time for deactivation and reactivation.

d. Operation of Station Utilities: The Contractor shall not operate nor disturb the setting of control devices in the station utilities system, including water, sewer, electrical, and steam services. The Government will operate the control devices as required for normal conduct of the work. The Contractor shall notify the Contracting Officer giving reasonable advance notice when such operation is required.

1.5.8 AREA WORK CLEARANCE REQUEST

Coordinate work via the Contracting Officer. Furnish the:

a. Contract title and number

b. Specific location of work

c. Reason for work

d. Duration of work

1.5.8.1 Hazardous Areas

Do not enter into work areas where activity personnel are using protective equipment such as respirator and masks or marked boundary areas without prior approval.

1.6 SECURITY REQUIREMENTS

Contract Clause "FAR 52.204-2, Security Requirements and Alternate II" and "FAC 5252.236-9301, Special Working Conditions and Entry to Work Area" apply.

1.6.1 Personnel List

Submit for approval, at least 21 days prior to the desired date of entry, an original alphabetical list of personnel who require entry into Government property to perform work on the project. Furnish for each person:

a. Name

b. Date and place of birth

c. Citizenship

d. Home address

e. Social security number

f. Current pass expiration date

g. Naturalization or Alien Registration number

h. Passport number, place of issue, and expiration date

i. Guam Police clearance report for last six months

j. USAF Contractor/Sub-Contractor Access Affidavit as required by Andersen Air Force Base Guam

The request for personnel passes shall be accompanied with the following certification:

"I hereby certify that all personnel on this list are either born U.S. citizens, naturalized U.S. citizens with the naturalization number shown, or legal aliens with the alien registration number indicated."

Signature/Firm Name

1.6.2 Vehicle List

Submit an original list of vehicles to be utilized at the work site with the following information for each vehicle:

a. Make

b. Year

c. Model

d. License number

e. Registered owner

f. Current NAVBASE Guam pass expiration date

Provide full name, date of birth, and social security number of all employees and representatives of the Contractor who need access to the Quarters "A" compound to the Contracting Officer at least 7 days in advance of the date on which access is desired. The Contractor will be advised should any of the proposed employees not meet security requirements for access to the Quarters "A" compound. For individual cases, access to the Quarters "A" compound can occasionally be obtained with a 4-hour advance notice; however, the Contracting Officer reserves the right to utilize the full 7 days should he determine it necessary.

1.6.3 Passes

Submit request for personnel and vehicle passes together. Include the Certificate of Insurance for Contractor and Subcontractor(s) and the Statement of Acknowledgement Form SF 1413 with the submittal. Passes will normally be issued within 21 days.

1.6.3.1 Control

Maintain strict accountability over passes. Immediately report to the source of issue, passes missing or lost and the circumstances. If the Contractor has another active contract or one commencing immediately,

employees' names may be transferred from one contract to the other. Final payment will not be effected until employees are transferred to another contract or the records are cleared. Furnish a signed letter, countersigned by the source of issue, stating that passes have been turned in.

1.6.4 Photographs

The possession or use of photography equipment is prohibited in and around restricted areas. When photography is required under this contract, the contractor shall submit a completed photographer's identification card request to the Contracting Officer at least 14 calendar days in advance. The request shall identify the person and equipment involved and the location and purpose of the photographs. All photographs are subject to review by the Government prior to release.

1.6.5 Commander, Navy Region Marianas (CNRM) Fuel Division, Safety/Security Policy

Non-CNRM Fuel Division personnel requiring access to the Fuel Farm and other Fuel Division property shall check in at Bldg. 1700, Sasa Valley Fuel Farm, at the beginning and end of each work day. Keys to Fuel Facilities will be issued daily between the hours of 7:30 a.m. and 4:00 p.m. Keys must be returned by 7:00 p.m. the same day.

At the end of each workday, update the check-in board in the Fuel Division Operations and provide information as follows for the next workday:

a. Contract name or number

b. Name of person responsible for work crew(s)

c. Emergency phone numbers

d. Number of workers in crew

e. Location of work

f. Type of work to be conducted

g. Fuel Division support required:

1) Draining of pipe

2) Outages

Route hot work permits to the CNRM Fuel Division for approval. Following approval, submit permit to the Federal Fire Department (FFD). After approval by the FFD, submit a copy of the permit and the Marine Chemist Gas Free Certificate to the Fuels Operations Division for record.

1.6.6 Other Sensitive Areas

1.6.6.1 Extraordinary Security Requirements

The Contract Clause entitled "Identification of Employees" and the following apply:

a. Vehicle searches. All construction vehicles will be searched by the Marine sentry.

1.7 Special Scheduling Requirements for Family Housing Area

1.7.1 Minimal Interference

The Contractor shall conduct his operations so as to cause the least possible interference with the building/or housing tenants.

1.7.2 Interruption to Operations

The work under this contract requires special attention to the scheduling and conduct of the work in connection with existing operations. Identify on the project schedule each factor, which constitutes a potential interruption to operations. Permission to interrupt any Activity roads, and/or utility service shall be requested in writing a minimum of 15 calendar days prior to the desired date of interruption.

1.7.2.1 Notification

Housing residents shall be notified of any work in and around Housing Areas before any work is started. Buildings or housing units shall remain accessible to tenants. The Contractor shall coordinate roof access with the housing tenant(s) or, if the tenant is not home, by taping the notice to the front door of the unit(s), in a conspicuous location. The written notice shall be prepared by the Contractor in coordination with the Contracting Officer and shall indicate the construction or renovation project area to include, but not limited to the building and/or house number, street name, and the type of work to be accomplished. The start and completion dates shall be included on the notice. If it is necessary to shut down or interrupt utility systems, a new notice is required and the times and dates of the outage shall be indicated on the notice. Prior to the start of delivery of the first notice, a list of units to be served with the written notice shall be submitted to the Contracting Officer and the U.S. Navy Family Housing Department for approval and information. Delivery schedule of written notice to the tenants by the Contractor to be done on three occasions are as follows:

a. 1st: Fourteen (14) calendar days prior to the impending start of work.

b. 2nd: Seven (7) calendar days prior to the impending start of work.

c. 3rd: Twenty four (24) hours prior to the start of work in or around each unit to confirm the intent of the Contractor to start work in or around each unit the following day. If an outage will affect a whole housing area or a partial area, a notice 24 hours prior to the outage shall be placed on each unit affected.

1.7.2.2 Weekend Work

Normally, no work is allowed on weekends at Housing Areas. For an exception to this policy, the Contractor must submit a written request to the Contracting Officer. Approval of the request is at the sole discretion of the Contracting Officer in coordination with the Housing Manager.

PART 2 PRODUCTS

Not Used

PART 3 EXECUTION

Not Used

-- End of Section --

SECTION 01 20 00.00 20

PRICE AND PAYMENT PROCEDURES
11/11

PART 1 GENERAL

1.1 REFERENCES

The publications listed below form a part of this specification to the extent referenced. The publications are referred to within the text by the basic designation only.

U.S. ARMY CORPS OF ENGINEERS (USACE)

EP-1110-1-8	(2009) Construction Equipment Ownership and Operating Expense Schedule

1.2 SUBMITTALS

Government approval is required for submittals with a "G" designation; submittals not having a "G" designation are [for Contractor Quality Control approval. When used, a designation following the "G" designation identifies the office that will review the submittal for the Government. The following shall be submitted in accordance with Section 01 33 00 SUBMITTAL PROCEDURES:

SD-01 Preconstruction Submittals

Schedule of Prices; G

1.3 SCHEDULE OF PRICES

1.3.1 Data Required

This contract requires the use of a cost-loaded Network Analysis Schedule (NAS). The information required for the Schedule of Prices will be entered as an integral part of the Network Analysis Schedule. Within 15 calendar days of notice of award, prepare and deliver to the Contracting Officer a Schedule of Prices (construction contract) as directed by the Contracting Officer. Provide a detailed breakdown of the contract price, giving quantities for each of the various kinds of work, unit prices, and extended prices. Costs shall be summarized and totals provided for each construction category.

1.3.2 Schedule Instructions

Payments will not be made until the Schedule of Prices has been submitted to and accepted by the Contracting Officer. Identify the cost for site work, and include incidental work to the 5 ft line. Identify costs for the building(s), and include work out to the 5 ft line. Work out to the 5 ft line shall include construction encompassed within a theoretical line 5 ft from the face of exterior walls and shall include attendant construction, such as pad mounted HVAC cooling equipment, cooling towers, and transformers placed beyond the 5 ft line.

1.4 CONTRACT MODIFICATIONS

In conjunction with the Contract Clause "DFARS 252.236-7000, Modification Proposals-Price Breakdown," and where actual ownership and operating costs of construction equipment cannot be determined from Contractor accounting records, equipment use rates shall be based upon the applicable provisions of the EP-1110-1-8.

1.5 CONTRACTOR'S INVOICE AND CONTRACT PERFORMANCE STATEMENT

1.5.1 Content of Invoice

Requests for payment will be processed in accordance with the Contract Clause FAR 52.232-27, Prompt Payment Construction Contracts and FAR 52.232-5, Payments Under Fixed-Price Construction Contracts. The requests for payment shall include the documents listed below.

a. The Contractor's invoice, on NAVFAC Form 7300/30 furnished by the Government, showing in summary form, the basis for arriving at the amount of the invoice. Form 7300/30 shall include certification by Quality Control (QC) Manager as required by the contract.

b. The Estimate for Voucher/ Contract Performance Statement on NAVFAC Form 7300/31 furnished by the Government, showing in detail: the estimated cost, percentage of completion, and value of completed performance.

c. Updated Project Schedule and reports required by the contract.

d. Contractor Safety Self Evaluation Checklist.

e. Other supporting documents as requested.

f. Updated copy of submittal register.

g. Invoices not completed in accordance with contract requirements will be returned to the Contractor for correction of the deficiencies.

h. Monthly Work-hour report.

i. Solid Waste Disposal Report.

1.5.2 Submission of Invoices

If NFAS Clause 5252.232-9301 is included in the contract, the listed documents shall be provided as attachments in Wide Area Work Flow (WAWF). The maximum size of each WAWF attachment is two megabytes, but there are no limits on the number of attachments. If a document cannot be attached in WAWF due to system or size restriction it shall be provided as instructed by the Contracting Officer.

1.5.3 Final Invoice

a. A final invoice shall be accompanied by the certification required by DFARS 252.247.7023 TRANSPORTATION OF SUPPLIES BY SEA, and the Contractor's Final Release. If the Contractor is incorporated, the Final Release shall contain the corporate seal. An officer of the

corporation shall sign and the corporate secretary shall certify the Final Release.

b. For final invoices being submitted via WAWF, the original Contractor's Final Release Form and required certification of Transportation of Supplies by Sea must be provided directly to the respective Contracting Officer prior to submission of the final invoice. Once receipt of the original Final Release Form and required certification of Transportation of Supplies by Sea has been confirmed by the Contracting Officer, the Contractor shall then submit final invoice and attach a copy of the Final Release Form and required certification of Transportation of Supplies by Sea in WAWF.

c. Final invoices not accompanied by the Contractor's Final Release and required certification of Transportation of Supplies by Sea will be considered incomplete and will be returned to the Contractor.

1.6 PAYMENTS TO THE CONTRACTOR

Payments will be made on submission of itemized requests by the Contractor which comply with the requirements of this section, and will be subject to reduction for overpayments or increase for underpayments made on previous payments to the Contractor.

1.6.1 Obligation of Government Payments

The obligation of the Government to make payments required under the provisions of this contract will, at the discretion of the Contracting Officer, be subject to reductions and/or suspensions permitted under the FAR and agency regulations including the following in accordance with "FAR 32.503-6:

a. Reasonable deductions due to defects in material or workmanship;

b. Claims which the Government may have against the Contractor under or in connection with this contract;

c. Unless otherwise adjusted, repayment to the Government upon demand for overpayments made to the Contractor; and

d. Failure to provide up to date record drawings not current as stated in Contract Clause "FAC 5252.236-9310, Record Drawings."

1.6.2 Payment for Onsite and Offsite Materials

Progress payments may be made to the contractor for materials delivered on the site, for materials stored off construction sites, or materials that are in transit to the construction sites under the following conditions:

a. FAR 52.232-5(b) Payments Under Fixed Price Construction Contracts.

b. Materials delivered on the site but not installed, including completed preparatory work, and off-site materials to be considered for progress payment shall be major high cost, long lead, special order, or specialty items, not susceptible to deterioration or physical damage in storage or in transit to the construction site. Examples of materials acceptable for payment consideration include, but are not limited to,

structural steel, non-magnetic steel, non-magnetic aggregate, equipment, machinery, large pipe and fittings, precast/prestressed concrete products, plastic lumber (e.g., fender piles/curbs), and high-voltage electrical cable. Materials not acceptable for payment include consumable materials such as nails, fasteners, conduits, gypsum board, glass, insulation, and wall coverings.

c. Materials to be considered for progress payment prior to installation shall be specifically and separately identified in the Contractor's estimates of work submitted for the Contracting Officer's approval in accordance with Schedule of Prices requirement of this contract. Requests for progress payment consideration for such items shall be supported by documents establishing their value and that the title requirements of the clause at FAR 52.232-5 have been met.

d. Materials are adequately insured and protected from theft and exposure.

e. Provide a written consent from the surety company with each payment request for offsite materials.

f. Materials to be considered for progress payments prior to installation shall be stored either in Hawaii, Guam, Puerto Rico, or the Continental United States. Other locations are subject to written approval by the Contracting Officer.

PART 2 PRODUCTS

Not Used

PART 3 EXECUTION

Not Used

-- End of Section --

SECTION 01 30 00

ADMINISTRATIVE REQUIREMENTS
11/11

PART 1 GENERAL

1.1 REFERENCES

The publications listed below form a part of this specification to the extent referenced. The publications are referred to within the text by the basic designation only.

U.S. NATIONAL ARCHIVES AND RECORDS ADMINISTRATION (NARA)

15 CFR 772	Definition of Terms
15 CFR 773	Special Licensing Procedures

1.2 SUBMITTALS

Government approval is required for submittals with a "G" designation; submittals not having a "G" designation are for Contractor Quality Control approval. When used, a designation following the "G" designation identifies the office that will review the submittal for the Government. The following shall be submitted in accordance with Section 01 33 00 SUBMITTAL PROCEDURES:

SD-01 Preconstruction Submittals

List of contact personnel; G,

View location map; G,

Progress and completion pictures; G,

Personnel list; G,

Vehicle List; G,

Statement of Acknowledgement Form SF 1413

SD-04 Samples

Color boards; G,

1.3 VIEW LOCATION MAP

Submit to the Contracting Officer, prior to or with the first digital photograph submittals, a sketch or drawing indicating the required photographic locations. Update as required if the locations are moved.

1.4 MINIMUM INSURANCE REQUIREMENTS

Procure and maintain during the entire period of performance under this contract the following minimum insurance coverage:

a. Comprehensive general liability: $500,000 per occurrence

b. Automobile liability: $200,000 per person, $500,000 per occurrence for bodily injury, $20,000 per occurrence for property damage

c. Workmen's compensation as required by Federal and State workers' compensation and occupational disease laws.

d. Employer's liability coverage of $100,000, except in States where workers compensation may not be written by private carriers,

e. Others as required by Guam law.

1.5 CONTRACTOR PERSONNEL REQUIREMENTS

1.5.1 Subcontractors and Personnel

Furnish a list of contact personnel of the Contractor and subcontractors including addresses and telephone numbers for use in the event of an emergency. As changes occur and additional information becomes available, correct and change the information contained in previous lists.

1.5.2 Identification Badges

Identification badges, if required, will be furnished without charge. Application for and use of badges will be as directed. Identification badges will be issued to the Contractor and his employees in accordance with the Joint Region Guam Security Regulations. A copy of the security regulations may be obtained from the security office. All badges must be returned or accounted for to the Pass and Identification Office upon expiration of the badge or contract, or termination of the employee. Immediately report instances of lost or stolen badges to the Contracting Officer.

1.6 SUPERVISION

Have at least one qualified supervisor capable of reading, writing, and conversing fluently in the English language on the job site during working hours. In addition, if a Quality Control (QC) representative is required on the contract, then that individual shall also have fluent English communication skills.

1.7 PRECONSTRUCTION CONFERENCE

After award of the contract but prior to commencement of any work at the site, meet with the Contracting Officer to discuss and develop a mutual understanding relative to the administration of the value engineering and safety program, preparation of the schedule prices, shop drawings, and other submittals, scheduling programming, prosecution of the work, and clear expectations of the "Interim DD Form 1354" Submittal. Major subcontractors who will engage in the work shall also attend.

1.8 PARTNERING

LEVEL C PARTNERING: To most effectively accomplish this contract, the Government requires the formation of a cohesive partnership within the Project Team whose members are from the Government, the Contractor and

their Subcontractors. The partnership will draw on the strength of each organization in an effort to achieve a quality project done right the first time, within budget, on schedule, and without any safety mishaps. This level of partnering discusses partnering concepts and benefits and should become a part of the preconstruction conference. The senior Government representative and senior Contractor representative present will jointly host the partnering sessions. Partnering sessions should be held at or near the location of the activity contracting office. The participants shall bear their own costs for meals, lodging, and transportation associated with the partnering.

1.9 ELECTRONIC MAIL (E-MAIL) ADDRESS

The Contractor shall establish and maintain electronic mail (e-mail) capability along with the capability to open various electronic attachments in Microsoft, Adobe Acrobat, and other similar formats. Within 10 days after contract award, the Contractor shall provide the Contracting Officer a single (only one) e-mail address for electronic communications from the Contracting Officer related to this contract including, but not limited to contract documents, invoice information, request for proposals, and other correspondence. The Contracting Officer may also use email to notify the
Contractor of base access conditions when emergency conditions warrant, such as hurricanes, terrorist threats, etc. Multiple email address will not be allowed.

It is the Contractor's responsibility to make timely distribution of all Contracting Officer initiated e-mail with its own organization including field office(s). The Contractor shall promptly notify the Contracting Officer, in writing, of any changes to this email address.

1.10 SAFETY AND SECURITY

Ensure all personnel receive and acknowledge receipt of a safety and security briefing the content of which shall be consistent with inherent safety and security requirements of the project(s) to which the person will be assigned.

1.11 CLEANUP

Leave premises "broom clean." Sweep paved areas and rake clean landscaped areas. Remove waste and surplus materials, rubbish and construction facilities from the site.

PART 2 PRODUCTS

Not Used

PART 3 EXECUTION

Not Used

-- End of Section --

SECTION 01 32 01.00 10

PROJECT SCHEDULE
08/08

PART 1 GENERAL

1.1 REFERENCES

The publications listed below form a part of this specification to the extent referenced. The publications are referred to within the text by the basic designation only.

U.S. ARMY CORPS OF ENGINEERS (USACE)

ER 1-1-11	(1995) Administration -- Progress, Schedules, and Network Analysis Systems

1.2 SUBMITTALS

Government approval is required for submittals with a "G" designation; submittals not having a "G" designation are for Contractor Quality Control approval. When used, a designation following the "G" designation identifies the office that will review the submittal for the Government. Submit the following in accordance with Section 01 33 00 SUBMITTAL PROCEDURES:

SD-01 Preconstruction Submittals

Project Schedule; G

1.3 SCHEDULE PREPARER

Designate an authorized representative to be responsible for the preparation of the schedule and all required updating (activity status) and preparation of reports. The authorized representative shall have previously developed, created, and maintained at least 2 electronic schedules for projects similar in nature and complexity to this project and shall be experienced in the use of the scheduling software that meets the requirements of this specification.

PART 2 PRODUCTS

Not Used

PART 3 EXECUTION

3.1 GENERAL REQUIREMENTS

Prepare for approval a Project Schedule, as specified herein, pursuant to the Contract Clause, SCHEDULE FOR CONSTRUCTION CONTRACTS. Show in the schedule the sequence in which the Contractor proposes to perform the work and dates on which the Contractor contemplates starting and completing all schedule activities. The scheduling of the entire project, including the construction sequences, is required. The scheduling of construction is the responsibility of the Contractor. Contractor management personnel shall actively participate in its development. Subcontractors and suppliers

working on the project shall also contribute in developing and maintaining an accurate Project Schedule. Provide a schedule that is a forward planning as well as a project monitoring tool.

3.1.1 Approved Project Schedule

Use the approved Project Schedule to measure the progress of the work and to aid in evaluating time extensions. Make the schedule cost loaded and activity coded. The schedule will provide the basis for all progress payments. If the Contractor fails to submit any schedule within the time prescribed, the Contracting Officer may withhold approval of progress payments until the Contractor submits the required schedule.

3.1.2 Schedule Status Reports

Provide a Schedule Status Report on at least a monthly basis. If, in the opinion of the Contracting Officer, the Contractor falls behind the approved schedule, take steps necessary to improve its progress including those that may be required by the Contracting Officer, without additional cost to the Government. In this circumstance, the Contracting Officer may require the Contractor to increase the number of shifts, overtime operations, days of work, and/or the amount of construction plant, and to submit for approval any supplementary schedule or schedules as the Contracting Officer deems necessary to demonstrate how the approved rate of progress will be regained.

3.1.3 Default Terms

Failure of the Contractor to comply with the requirements of the Contracting Officer shall be grounds for a determination, by the Contracting Officer, that the Contractor is not prosecuting the work with sufficient diligence to ensure completion within the time specified in the contract. Upon making this determination, the Contracting Officer may terminate the Contractor's right to proceed with the work, or any separable part of it, in accordance with the default terms of the contract.

3.2 BASIS FOR PAYMENT AND COST LOADING

Use the schedule as the basis for determining contract earnings during each update period and therefore the amount of each progress payment. Lack of an approved schedule update, or qualified scheduling personnel, will result in the inability of the Contracting Officer to evaluate contract earned value for the purposes of payment. Failure of the Contractor to provide all required information will result in the disapproval of the preliminary, initial and subsequent schedule updates. In the event schedule revisions are directed by the Contracting Officer and those revisions have not been included in subsequent revisions or updates, the Contracting Officer may hold retainage up to the maximum allowed by contract, each payment period, until such revisions to the Project Schedule have been made. Activity cost loading shall be reasonable, as determined by the Contracting Officer. The aggregate value of all activities coded to a contract CLIN shall equal the value of the CLIN on the Schedule.

3.3 PROJECT SCHEDULE DETAILED REQUIREMENTS

The computer software system utilized to produce and update the Project Schedule shall be capable of meeting all requirements of this specification. Failure of the Contractor to meet the requirements of this specification will result in the disapproval of the schedule.

3.3.1 Critical Path Method

Use the Critical Path Method (CPM) of network calculation to generate the Project Schedule. Prepare the Project Schedule using the Precedence Diagram Method (PDM).

3.3.2 Level of Detail Required

Develop the Project Schedule to an appropriate level of detail. Failure to develop the Project Schedule to an appropriate level of detail, as determined by the Contracting Officer, will result in its disapproval. The Contracting Officer will consider, but is not limited to, the following characteristics and requirements to determine appropriate level of detail:

3.3.2.1 Activity Durations

Reasonable activity durations are those that allow the progress of ongoing activities to be accurately determined between update periods. Less than 2 percent of all non-procurement activities shall have Original Durations (OD) greater than 20 work days or 30 calendar days. Procurement activities are defined herein.

3.3.2.2 Procurement Activities

The schedule must include activities associated with the submittal, approval, procurement, fabrication and delivery of long lead materials, equipment, fabricated assemblies and supplies. Long lead procurement activities are those with an anticipated procurement sequence of over 90 calendar days. A typical procurement sequence includes the string of activities: submit, approve, procure, fabricate, and deliver.

3.3.2.3 Mandatory Tasks

The following tasks must be included and properly scheduled:

a. Contractor's pre-final inspection.

b. Correction of punchlist from Contractor's pre-final inspection.

c. Government's pre-final inspection.

d. Correction of punch list from Government's pre-final inspection.

e. Final inspection.

3.3.2.4 Government Activities

Show Government and other agency activities that could impact progress. These activities include, but are not limited to: approvals, environmental permit approvals by State regulators, inspections, utility tie-in,

Government Furnished Equipment (GFE) and Notice to Proceed (NTP) for phasing requirements.

3.3.2.5 Activity Responsibility Coding (RESP)

Assign responsibility Code for all activities to the Prime Contractor, Subcontractor or Government agency responsible for performing the activity. Activities coded with a Government Responsibility code include, but are not limited to: Government approvals, environmental permit approvals by State regulators, Government Furnished Equipment (GFE) and Notice to Proceed (NTP) for phasing requirements. Code all activities not coded with a Government Responsibility Code to the Prime Contractor or Subcontractor responsible to perform the work. Activities shall not have more than one Responsibility Code. Unacceptable code values are abbreviations of the names of subcontractors.

3.3.2.6 Activity Work Area Coding

Assign Work Area code to activities based upon the work area in which the activity occurs. Define work areas based on resource constraints or space constraints that would preclude a resource, such as a particular trade or craft work crew, from working in more than one work area at a time due to restraints on resources or space. Examples of Work Area Coding include different areas within a floor of a building, different floors within a building, and different buildings within a complex of buildings. Activities shall not have more than one Work Area Code. Not all activities are required to be Work Area coded. A lack of Work Area coding will indicate the activity is not resource or space constrained.

3.3.2.7 Contract Changes/Requests for Equitable Adjustment (REA) Coding (MODF)

Assign Activity code to any activity or sequence of activities added to the schedule as a result of a Contract Modification, when approved by the Contracting Officer, with a Contract Changes/REA Code. Key all Code values to the Government's modification numbering system. Any activity or sequence of activities added to the schedule as a result of alleged constructive changes made by the Government may be added to a copy of the current schedule, subject to the approval of the Contracting Officer. Assign Activity codes for these activities with a Contract Changes/REA Code. Key the code values to the Contractor's numbering system. Approval to add these activities does not necessarily mean the Government accepts responsibility and, therefore, liability for such activities and any associated impacts to the schedule, but rather the Government recognizes such activities are appropriately added to the schedule for the purposes of maintaining a realistic and meaningful schedule. Such activities shall not be Responsibility Coded to the Government unless approved. An activity shall not have more than one Contract Changes/REA Code.

3.3.2.8 Contract Line Item (CLIN) Coding (BIDI)

Code all activities to the CLIN on the Contract Line Item Schedule to which the activity belongs. An activity shall not contain more than one CLIN Item Code. CLIN Item code all activities, even when an activity is not cost loaded.

3.3.2.9 Phase of Work Coding (PHAS)

Assign Phase of Work Code to all activities based upon the phase of work in which the activity occurs. Code activities to a Construction Phase. Code fast track construction phases proposed by the Contractor to allow filtering and organizing the schedule by fast track design and construction packages. If the contract specifies construction phasing with separately defined performance periods, identify a Construction Phase Code to allow filtering and organizing the schedule accordingly. Each activity shall be identified with a single project phase and have only one Phase of Work code.

3.3.2.10 Category of Work Coding (CATW)

Assign Category of Work Code to all Activities based upon the category of work to which the activity belongs. Category of Work Code must include, but is not limited to: permits, construction submittals, construction submittal approvals, Acceptance, Procurement, Fabrication, Delivery, Weather Sensitive Installation, Non-Weather Sensitive Installation, Start-Up, Test and Turnover. Assign a Category of Work Code to each activity. Each activity shall have only one Category of Work Code.

3.3.2.11 Definable Features of Work Coding (FOW1, FOW2, FOW3)

Assign a Definable Feature of Work Code to appropriate activities based on the definable feature of work to which the activity belongs. Definable Feature of Work is defined in Specification Section 01 45 00.10 20 QUALITY CONTROL FOR MINOR CONSTRUCTION. An activity shall not have more than one Definable Feature of Work Code. Not all activities are required to be Definable Feature of Work Coded.

3.3.3 Scheduled Project Completion and Activity Calendars

The schedule interval shall extend from NTP date to the required contract completion date. The contract completion activity (End Project) shall finish based on the required contract duration in the accepted contract proposal, as adjusted for any approved contract time extensions. The first scheduled work period shall be the day after NTP is received by the Contractor. Schedule activities on a calendar to which the activity logically belongs. Activities may be assigned to a 7 day calendar when the contract assigns calendar day durations for the activity such as a Government Acceptance activity. If the Contractor intends to perform physical work less than seven days per week, schedule the associated activities on a calendar with non-work periods identified including weekends and holidays. Assign the Category of Work Code – Weather Sensitive Installation to those activities that are weather sensitive. Original durations must account for anticipated normal adverse weather. The Government will interpret all work periods not identified as non-work periods on each calendar as meaning the Contractor intends to perform work during those periods.

3.3.3.1 Project Start Date

The schedule shall start no earlier than the date on which the NTP was acknowledged. Include as the first activity in the project schedule an activity called "Start Project" (or NTP). The "Start Project" activity

shall have an "ES" constraint date equal to the date that the NTP was acknowledged, and a zero day duration.

3.3.3.2 Schedule Constraints and Open Ended Logic

Constrain completion of the last activity in the schedule by the contract completion date. Schedule calculations shall result in a negative float when the calculated early finish date of the last activity is later than the contract completion date. Include as the last activity in the project schedule an activity called "End Project". The "End Project" activity shall have an "LF" constraint date equal to the contract completion date for the project, and with a zero day duration or by using the "project must finish by" date in the scheduling software. The schedule shall have no constrained dates other than those specified in the contract. The use of artificial float constraints such as "zero fee float" or "zero total float" are typically prohibited. There shall only be 2 open ended activities: Start Project (or NTP) with no predecessor logic and End Project with no successor logic.

3.3.3.3 Early Project Completion

In the event the Preliminary or Initial project schedule calculates an early completion date of the last activity prior to the contract completion date, identify those activities that it intends to accelerate and/or those activities that are scheduled in parallel to support the Contractor's "early" completion. The last activity shall have a late finish constraint equal to the contract completion date and the schedule will calculate positive float. The Government will not approve an early completion schedule with zero float on the longest path. The Government is under no obligation to accelerate activities for which it is responsible to support a proposed early contract completion.

3.3.4 Interim Completion Dates

Constrain contractually specified interim completion dates to show negative float when the calculated early finish date of the last activity in that phase is later than the specified interim completion date.

3.3.4.1 Start Phase

Include as the first activity for a project phase an activity called "Start Phase X" where "X" refers to the phase of work. The "Start Phase X" activity shall have an "ES" constraint date equal to the date on which the NTP was acknowledged, and a zero day duration.

3.3.4.2 End Phase

Include as the last activity for a project phase an activity called "End Phase X" where "X" refers to the phase of work. The "End Phase X" activity shall have an "LF" constraint date equal to the specified completion date for that phase and a zero day duration.

3.3.4.3 Phase "X" Hammock

Include a hammock type activity for each project phase called "Phase X" where "X" refers to the phase of work. The "Phase X" hammock activity shall be logically tied to the earliest and latest activities in the phase.

3.3.5 Default Progress Data Disallowed

Do not automatically update Actual Start and Finish dates with default mechanisms that may be included in the scheduling software. Activity Actual Start (AS) and Actual Finish (AF) dates assigned during the updating process shall match those dates provided from Contractor Quality Control Reports. Failure of the Contractor to document the AS and AF dates on the Daily Quality Control report for every in-progress or completed activity, and failure to ensure that the data contained on the Daily Quality Control reports is the sole basis for schedule updating shall result in the disapproval of the Contractor's updated schedule and the inability of the Contracting Officer to evaluate Contractor progress for payment purposes. Updating of the percent complete and the remaining duration of any activity shall be independent functions. Disable program features which calculate one of these parameters from the other.

3.3.6 Out-of-Sequence Progress

Activities that have progressed before all preceding logic has been satisfied (Out-of-Sequence Progress) will be allowed only on a case-by-case basis subject to approval by the Contracting Officer. Propose logic corrections to eliminate all out of sequence progress or justify not changing the sequencing for approval prior to submitting an updated project schedule. Correct out of sequence progress that continues for more than two update cycles by logic revision, as approved by the Contracting Officer.

3.3.7 Negative Lags and Start to Finish Relationships

Lag durations contained in the project schedule shall not have a negative value. Do not use Start to Finish (SF) relationships.

3.3.8 Calculation Mode

Schedule calculations shall retain the logic between predecessors and successors even when the successor activity starts and the predecessor activity has not finished. Software features that in effect sever the tie between predecessor and successor activities when the successor has started and the predecessor logic is not satisfied ("progress override") will not be allowed.

3.3.9 Milestones

The schedule must include milestone activities for each significant project event including but not limited to: milestone activities for each fast track design package released for construction; design complete; foundation/substructure construction complete; superstructure construction complete; building dry-in or enclosure complete to allow the initiation of finish activities; permanent power complete; and building systems commissioning complete.

3.4 PROJECT SCHEDULE SUBMISSIONS

Provide the submissions as described below. The data CD, reports, and network diagrams required for each submission are contained in paragraph SUBMISSION REQUIREMENTS.

3.4.1 Preliminary Project Schedule Submission

Submit the Preliminary Project Schedule, defining the Contractor's planned operations for the first 90 calendar days for approval within 15 calendar days after the NTP is acknowledged. The approved Preliminary Project Schedule will be used for payment purposes not to exceed 90 calendar days after NTP. Completely cost load the Preliminary Project Schedule to balance the contract award CLINS shown on the Price Schedule. Detail it for the first 90 calendar days. It may be summary in nature for the remaining performance period. It must be early start and late finish constrained and logically tied as previously specified. The Preliminary Project Schedule forms the basis for the Initial Project Schedule specified herein and must include all of the required Plan and Program preparations, submissions and approvals identified in the contract (for example, Quality Control Plan, Safety Plan, and Environmental Protection Plan) as well as design activities, the planned submissions of all early design packages, permitting activities, design review conference activities and other non-construction activities intended to occur within the first 90 calendar days. Schedule any construction activities planned for the first 90 calendar days after NTP. Constrain planned construction activities by Government acceptance of the associated design package(s) and all other specified Program and Plan approvals. Activity code any activities that are summary in nature after the first 90 calendar days with Responsibility Code (RESP) and Feature of Work code (FOW1, FOW2, FOW3).

3.4.2 Initial Project Schedule Submission

Submit the Initial Project Schedule for approval within 15 calendar days after NTP. The schedule shall demonstrate a reasonable and realistic sequence of activities which represent all work through the entire contract performance period. The Initial Schedule shall be at a reasonable level of detail as determined by the Contracting Officer. Include in the schedule permitting activities, including but not limited to permit submissions and any required Government actions; and long lead item acquisition prior to design completion. Also cover in the preliminary schedule the entire construction effort with as much detail as is known at the time but, as a minimum, include all construction start and completion milestones, and detailed construction activities through the dry-in milestone, including all activity coding and cost loading. Include the remaining construction, including cost loading, but it may be scheduled summary in nature.

3.4.3 Periodic Schedule Updates

Based on the result of the meeting, specified in PERIODIC SCHEDULE UPDATE MEETINGS, submit periodic schedule updates. These submissions will enable the Contracting Officer to assess Contractor's progress. If the Contractor fails or refuses to furnish the information and project schedule data, which in the judgment of the Contracting Officer or authorized representative is necessary for verifying the Contractor's progress, the Contractor shall be deemed not to have provided an estimate upon which progress payment may be made.

3.4.4 Standard Activity Coding Dictionary

Use the activity coding structure defined in the Standard Data Exchange Format (SDEF) in ER 1-1-11, Appendix A. This exact structure is mandatory, even if some fields are not used. A template SDEF compatible schedule backup file (sdef.prx) is available on the QCS website: http://rms.usace.army.mil/. The SDEF format is as follows:

Field	Activity Code	Length	Description
1	WRKP	3	Workers per Day
2	RESP	4	Responsible Party (e.g. GC, subcontractor, USACE)
3	AREA	4	Area of Work
4	MODF	6	Modification or REA number
5	BIDI	6	Bid Item (CLIN)
6	PHAS	2	Phase of Work
7	CATW	1	Category of Work
8	FOW1	10	Feature of Work (used up to 10 characters in length)
9	FOW2	10	Feature of Work (used up to 20 characters in length)
10	FOW3	10	Feature of Work (used up to 30 characters in length)

3.5 SUBMISSION REQUIREMENTS

Submit the following items for the Preliminary Schedule, Initial Schedule, and every Periodic Schedule Update throughout the life of the project:

3.5.1 Data CD's

Provide two sets of data CD's containing the project schedule in the backup format. Each CD shall also contain all previous update backup files. File medium shall be CD. Label each CD indicating the type of schedule (Preliminary, Initial, Update), full contract number, Data Date and file name. Each schedule shall have a unique file name as determined by the Contractor.

3.5.2 Narrative Report

Provide a Narrative Report with the Preliminary, Initial, and each Periodic Update of the project schedule, as the basis of the progress payment request. The Narrative Report shall include: a description of activities along the 2 most critical paths where the total float is less than or equal to 20 work days, a description of current and anticipated problem areas or delaying factors and their impact, and an explanation of corrective actions taken or required to be taken. The narrative report is expected to communicate to the Government, the Contractor's thorough analysis of the schedule output and its plans to compensate for any problems, either current or potential, which are revealed through that analysis. Identify and explain why any activities that, based their calculated late dates, should have either started or finished during the update period but did not.

3.5.3 Approved Changes Verification

Include only those project schedule changes in the schedule submission that have been previously approved by the Contracting Officer. The Narrative Report shall specifically reference, on an activity by activity

basis, all changes made since the previous period and relate each change to documented, approved schedule changes.

3.5.4 Schedule Reports

The format, filtering, organizing and sorting for each schedule report shall be as directed by the Contracting Officer. Typically reports shall contain: Activity Numbers, Activity Description, Original Duration, Remaining Duration, Early Start Date, Early Finish Date, Late Start Date, Late Finish Date, Total Float, Actual Start Date, Actual Finish Date, and Percent Complete. The following lists typical reports that will be requested. One or all of these reports may be requested for each schedule submission.

3.5.4.1 Activity Report

A list of all activities sorted according to activity number.

3.5.4.2 Logic Report

A list of detailed predecessor and successor activities for every activity in ascending order by activity number.

3.5.4.3 Total Float Report

A list of all incomplete activities sorted in ascending order of total float. List activities which have the same amount of total float in ascending order of Early Start Dates. Do not show completed activities on this report.

3.5.4.4 Earnings Report by CLIN

A compilation of the Contractor's Total Earnings on the project from the NTP to the data date. This report shall reflect the earnings of specific activities based on the agreements made in the schedule update meeting defined herein. Provided that the Contractor has furnished a complete schedule update, this report shall serve as the basis of determining progress payments. Group activities by CLIN item number and sort by activity number. This report shall: sum all activities coded to a particular CLIN and provide a CLIN item percent earned value; and complete and sum CLIN items to provide a total project percent complete. The printed report shall contain, for each activity: the Activity Number, Activity Description, Original Budgeted Amount, Total Quantity, Quantity to Date, Percent Complete (based on cost), and Earnings to Date.

3.5.5 Network Diagram

The network diagram is required for the Preliminary, Initial and Periodic Updates. The network diagram shall depict and display the order and interdependence of activities and the sequence in which the work is to be accomplished. The Contracting Officer will use, but is not limited to, the following conditions to review compliance with this paragraph:

3.5.5.1 Continuous Flow

Diagrams shall show a continuous flow from left to right with no arrows from right to left. Show the activity number, description, duration, and estimated earned value on the diagram.

3.5.5.2 Project Milestone Dates

Show dates on the diagram for start of project, any contract required interim completion dates, and contract completion dates.

3.5.5.3 Critical Path

Clearly show the critical path.

3.5.5.4 Banding

Organize activities as directed to assist in the understanding of the activity sequence. Typically, this flow will group activities by category of work, work area and/or responsibility.

3.5.5.5 S-Curves

Earnings curves showing projected early and late earnings and earnings to date.

3.6 PERIODIC SCHEDULE UPDATE MEETINGS

Conduct periodic schedule update meetings for the purposes of reviewing the Contractor's proposed out of sequence corrections, determining causes for delay, correcting logic, maintaining schedule accuracy and determining earned value. Meetings shall occur at least monthly within five days of the proposed schedule data date and after the Contractor has updated the schedule with Government concurrence respecting actual start dates, actual finish dates, remaining durations and percent complete for each activity it intend to status. Provide a computer with the scheduling software loaded and a projector during the meeting which allows all meeting participants to view the proposed schedule update during the meeting. The meeting and resultant approvable schedule update shall be a condition precedent to a formal submission of the update as described in SUBMISSION REQUIREMENTS and to the submission of an invoice for payment. The meeting will be a working interactive exchange which will allow the Government and the Contractor the opportunity to review the updated schedule on a real time and interactive basis. The Contractor's authorized scheduling representative will organize, sort, filter and schedule the update as requested by the Government. The meeting will last no longer than 8 hours. A rough draft of the proposed activity logic corrections and narrative report shall be provided to the Government 48 hours in advance of the meeting. The Contractor's Project Manager and Authorized Scheduler shall attend the meeting with the Authorized Representative of the Contracting Officer.

3.6.1 Update Submission Following Progress Meeting

Submit a complete update of the project schedule containing all approved progress, revisions, and adjustments, pursuant to paragraph SUBMISSION REQUIREMENTS not later than 4 working days after the periodic schedule

update meeting, reflecting only those changes made during the previous update meeting.

3.6.2 Status of Activities

Update information, including Actual Start Dates (AS), Actual Finish Dates (AF), Remaining Durations (RD), and Percent Complete shall be subject to the approval of the Government prior to the meeting. As a minimum, address the following items on an activity by activity basis during each progress meeting.

3.6.2.1 Start and Finish Dates

Accurately show the status of the AS and/or AF dates for each activity currently in-progress or completed since the last update. The Government may allow an AF date to be assigned with the percent complete less than 100% to account for the value of work remaining but not restraining successor activities. Only assign AS dates when actual progress occurs on an activity.

3.6.2.2 Remaining Duration

Update the estimated RD for all incomplete activities independent of Percent Complete. Remaining Durations may exceed the activity OD or may exceed the activity's prior update RD if the Government considers the current OD or RD to be understated based on current progress, insufficient work crews actually manning the job, unrealistic OD or deficiencies that must be corrected that restrain successor activities.

3.6.2.3 Percent Complete

Update the percent complete for each activity started, based on the realistic assessment of earned value. Activities which are complete but for remaining minor punch list work and which do not restrain the initiation of successor activities may be declared 100 percent complete. To allow for proper schedule management, cost load the correction of punch list from Government pre-final inspection activity(ies) not less than 1 percent of the total contract value, which activity(ies) may be declared 100 percent complete upon completion and correction of all punch list work identified during Government pre-final inspection(s).

3.6.2.4 Logic Changes

Specifically identify and discuss all logic changes pertaining to NTP on change orders, change orders to be incorporated into the schedule, Contractor proposed changes in work sequence, corrections to schedule logic for out-of-sequence progress, and other changes that have been made pursuant to contract provisions. The Government will only approve logic revisions for the purpose of keeping the schedule valid in terms of its usefulness in calculating a realistic completion date, correcting erroneous logic ties, and accurately sequencing the work.

3.6.2.5 Other Changes

Other changes required due to delays in completion of any activity or group of activities include: 1) delays beyond the Contractor's control, such as strikes and unusual weather. 2) delays encountered due to

submittals, Government Activities, deliveries or work stoppages which make re-planning the work necessary. 3) Changes required to correct a schedule that does not represent the actual or planned prosecution and progress of the work.

3.7 REQUESTS FOR TIME EXTENSIONS

In the event the Contractor believes it is entitled to an extension of the contract performance period, completion date, or any interim milestone date, furnish the following for a determination by the Contracting Officer: justification, project schedule data, and supporting evidence as the Contracting Officer may deem necessary. Submission of proof of excusable delay, based on revised activity logic, duration, and costs (updated to the specific date that the delay occurred) is a condition precedent to any approvals by the Government. In response to each Request For Proposal issued by the Government, submit a schedule impact analysis demonstrating whether or not the change contemplated by the Government impacts the critical path.

3.7.1 Justification of Delay

The project schedule shall clearly display that the Contractor has used, in full, all the float time available for the work involved with this request. The Contracting Officer's determination as to the number of allowable days of contract extension shall be based upon the project schedule updates in effect for the time period in question, and other factual information. Actual delays that are found to be caused by the Contractor's own actions, which result in a calculated schedule delay, will not be a cause for an extension to the performance period, completion date, or any interim milestone date.

3.7.2 Submission Requirements

Submit a justification for each request for a change in the contract completion date of less than 2 weeks based upon the most recent schedule update at the time of the NTP or constructive direction issued for the change. Such a request shall be in accordance with the requirements of other appropriate Contract Clauses and shall include, as a minimum:

a. A list of affected activities, with their associated project schedule activity number.

b. A brief explanation of the causes of the change.

c. An analysis of the overall impact of the changes proposed.

d. A sub-network of the affected area.

Identify activities impacted in each justification for change by a unique activity code contained in the required data file.

3.7.3 Additional Submission Requirements

The Contracting Officer may request an interim update with revised activities for any requested time extension of over 2 weeks. Provide this disk within 4 days of the Contracting Officer's request.

3.8 DIRECTED CHANGES

If the NTP is issued for changes prior to settlement of price and/or time, submit proposed schedule revisions to the Contracting Officer within 2 weeks of the NTP being issued. The Contracting Officer will approve proposed revisions to the schedule prior to inclusion of those changes within the project schedule. If the Contractor fails to submit the proposed revisions, the Contracting Officer may furnish the Contractor with suggested revisions to the project schedule. Include these revisions in the project schedule until revisions are submitted, and final changes and impacts have been negotiated. If the Contractor has any objections to the revisions furnished by the Contracting Officer, advise the Contracting Officer within 2 weeks of receipt of the revisions. Regardless of the objections, continue to update the schedule with the Contracting Officer's revisions until a mutual agreement in the revisions is reached. If the Contractor fails to submit alternative revisions within 2 weeks of receipt of the Contracting Officer's proposed revisions, the Contractor will be deemed to have concurred with the Contracting Officer's proposed revisions. The proposed revisions will then be the basis for an equitable adjustment for performance of the work.

3.9 WEEKLY PROGRESS MEETINGS

a. Meet weekly with the Government (or as otherwise mutually agreed to) between the meetings described in paragraph PERIODIC SCHEDULE UPDATE MEETINGS for the purpose of jointly reviewing the actual progress of the project as compared to the as planned progress and to review planned activities for the upcoming two weeks. The then current and approved schedule update shall be used for the purposes of this meeting and for the production and review of reports. The Contractor's Project Manager and the Authorized Representative of the Contracting Officer shall attend. The weekly progress meeting will address the status of RFI's, RFP's and Submittals.

b. Provide a bar chart produced by the scheduling software, organized by Total Float and Sorted by Early Start Date, and a two week "look-ahead" schedule by filtering all schedule activities to show only current ongoing activities and activities schedule to start during the upcoming two weeks, organized by Work Area Code (AREA) and sorted by Early Start Date.

c. The Government and the Contractor shall jointly review the reports. If it appears that activities on the longest path(s) which are currently driving the calculated completion date (driving activities), are not progressing satisfactorily and therefore could jeopardize timely project completion, corrective action must be taken immediately. Corrective action includes but is not limited to: increasing the number of work crews; increasing the number of work shifts; increasing the number of hours worked per shift; and determining if Government responsibility coded activities require Government corrective action.

3.10 OWNERSHIP OF FLOAT

Float available in the schedule, at any time, shall not be considered for the exclusive use of either the Government or the Contractor.

3.11 TRANSFER OF SCHEDULE DATA INTO RMS/QCS

Download and upload the schedule data into the Resident Management System (RMS) prior to RMS databases being transferred to the Government and is considered to be additional supporting data in a form and detail required by the Contracting Officer pursuant to FAR 52.232-5 - Payments under Fixed-Price Construction Contracts. The receipt of a proper payment request pursuant to FAR 52.232-27 - Prompt Payment for Construction Contracts is contingent upon the Government receiving both acceptable and approvable hard copies and electronic export from QCS of the application for progress payment.

-- End of Section --

SECTION 01 32 16.00 20

CONSTRUCTION PROGRESS DOCUMENTATION
11/09

PART 1 GENERAL

1.1 SUBMITTALS

Government approval is required for submittals with a "G" designation; submittals not having a "G" designation are for Contractor Quality Control approval. The following shall be submitted in accordance with Section 01 33 00 SUBMITTAL PROCEDURES:

SD-01 Preconstruction Submittals

Construction schedule; G

1.2 ACCEPTANCE

Prior to the start of work, prepare and submit to the Contracting Officer for acceptance a construction schedule in the form of a Bar Chart Network Analysis Schedule (NAS) in accordance with the terms in Contract Clause "FAR 52.236-15, Schedules for Construction Contracts," except as modified in this contract. Acceptance of an error free Baseline Schedule and updates is a condition precedent to processing the Contractor's pay request.

1.3 SCHEDULE FORMAT

1.3.1 Bar Chart Schedule

The Bar Chart shall show submittals, government review periods, material/equipment delivery, utility outages, on-site construction, inspection, testing, and closeout activities. The Bar Chart shall be time scaled and generated using an electronic spreadsheet program.

1.3.2 Network Analysis Schedule (NAS)

The Contractor shall use the critical path method (CPM) to schedule and control project activities. Project schedules shall be prepared and maintained using Primavera P3, Primavera SureTrak or current mandated scheduling program. Save files in Concentric P3 or current mandated scheduling program file format, compatible with the Governments version of the scheduling program. Importing data into P3/SureTrak/current mandated scheduling program using data conversion techniques or third party software will be cause for rejection of the submitted schedule. The schedule shall be built as follows:

The Project Schedule shall show submittals, government review periods, material/equipment delivery, utility outages, all on-site construction, inspection, testing, and closeout activities. Government and Contractor on-site work activities shall be driven by calendars that reflect Saturdays, Sundays and all Federal Holidays as non-work days.

With the exception of the Contract Award and End Contract milestone activities, no activities shall be open-ended; each activity shall have predecessor and successor ties.

Each activity shall be assigned its appropriate Responsibility Code indicating responsibility to accomplish the work indicated by the activity, Phase Code and Work Location Code.

Date/time constraint(s) and/or lags, other than those required by the contract, shall not be allowed unless accepted by the Contracting Officer. The Contractor shall include as the last activity in the contract schedule, a milestone activity named "Contract Completion Date". The "Contract Completion Date" milestone shall have a "Mandatory Finish" constraint equal to the contract completion date.

1.3.2.1 NAS Submittals and Procedures

Submit all network analysis and updates in hard copy and on electronic media that is acceptable to the Contracting Officer. Submit an electronic back-up of the project schedule in an import format compatible with the governments scheduling program.

1.4 UPDATED SCHEDULES

Update the Construction schedule at monthly intervals or when the schedule has been revised. The updated schedule shall be kept current, reflecting actual activity progress and plan for completing the remaining work. Submit copies of purchase orders and confirmation of delivery dates as directed.

1.5 3-WEEK LOOK AHEAD SCHEDULE

The Contractor shall prepare and issue a 3-Week Look Ahead schedule to provide a more detailed day-to-day plan of upcoming work identified on the Construction Schedule. The work plans shall be keyed to activity numbers when a NAS is required and updated each week to show the planned work for the current and following two-week period. Additionally, include upcoming outages, closures, preparatory meetings, and initial meetings. Identify critical path activities on the Three-Week Look Ahead Schedule. The detail work plans are to be bar chart type schedules, maintained separately from the Construction Schedule on an electronic spreadsheet program and printed on 8 ½ by 11 sheets as directed by the Contracting Officer. Activities shall not exceed 5 working days in duration and have sufficient level of detail to assign crews, tools and equipment required to complete the work. Three hard copies and one electronic file of the 3-Week Look Ahead Schedule shall be delivered to the Contracting Officer no later than 8 a.m. each Monday and reviewed during the weekly CQC Coordination Meeting.

1.6 CORRESPONDENCE AND TEST REPORTS:

All correspondence (e.g., letters, Requests for Information (RFIs), e-mails, meeting minute items, Production and QC Daily Reports, material delivery tickets, photographs, etc.) shall reference Schedule activities that are being addressed. All test reports (e.g., concrete, soil compaction, weld, pressure, etc.) shall reference schedule activities that are being addressed.

PART 2 PRODUCTS

Not used.

PART 3 EXECUTION

Not used.

-- End of Section --

SECTION 01 32 17.00 20

NETWORK ANALYSIS SCHEDULES (NAS)
08/10

PART 1 GENERAL

1.1 DESCRIPTION

The Contractor is responsible for scheduling procurement, Contractor quality control and construction, acceptance testing and training. Refer to Specification Section 01 33 00 SUBMITTAL PROCEDURES to determine if any items require Government approval prior to construction; If any are required, that submittal review time shall be included in the schedule.

The schedule is a tool to manage the project, both for Contractor and Government activities. It will also be used to report progress and evaluate time extensions. If cost-loaded, it will provide the basis for progress payments.

The Contractor shall use the Critical Path Method (CPM) and the Precedence Diagram Method (PDM) to satisfy time and cost applications. For consistency, when scheduling software terminology is used in this specification, the terms in Primavera's scheduling programs are used.

1.2 SUBMITTALS

The use of a "G" following a submittal indicates that a Government approval action is required. Submit the following in accordance with Section 01 33 00 SUBMITTAL PROCEDURES, except as modified in this contract.

SD-01 Preconstruction Submittals

Qualifications; G

Baseline Network Analysis Schedule (NAS); G

SD-07 Certificates

Monthly Network Analysis Schedule Update; G

SD-11 Closeout Submittals

As-Built Schedule; G

1.3 SCHEDULE ACCEPTANCE PRIOR TO START OF WORK

The Contracting Officer and Contractor shall participate in a preliminary meeting(s) to discuss the proposed schedule and requirements of this section prior to the Contractor preparing the Project Baseline Schedule.

Government review comments on the Contractor's schedule(s) shall not relieve the Contractor from compliance with requirements of the Contract Documents.

Only bonds shall be paid prior to acceptance of the Baseline Network Analysis Schedule (NAS).

The acceptance of a Baseline NAS is a condition precedent to:

1. The Contractor starting work on the demolition or construction stage(s) of the contract.

2. Processing Contractor's pay request(s) for construction activities/items of work.

3. Review of any schedule updates.

Submittal of the Baseline Network Analysis Schedule, and subsequent schedule updates, shall be understood to be the Contractor's certification that the submitted schedule meets all of the requirements of the Contract Documents, represents the Contractor's plan on how the work shall be accomplished, and accurately reflects the work that has been accomplished and how it was sequenced (as-built logic).

1.4 SOFTWARE

Project schedules must be prepared and maintained using Primavera P3, Primavera SureTrak or Primavera P6. Save files in Concentric P3 or P6 file format, compatible with the Governments version of the scheduling program. Importing data into P3/SureTrak/P6 using data conversion techniques or third party software will be cause for rejection of the submitted schedule.

1.5 QUALIFICATIONS

The designated Scheduler for the project shall have prepared and maintained at least 3 previous schedules of similar size and complexity of this contract using Primavera P3, Primavera SureTrak, or Primavera P6. A resume outlining the qualifications of the Scheduler shall be submitted for acceptance to the Contracting Officer. Payment will not be processed until an acceptable Scheduler is provided.

1.6 NETWORK SYSTEM FORMAT

The system shall include time scaled logic diagrams and specified reports.

1.6.1 Diagrams

Provide Time-scaled Logic Diagram printed in color on ANSI D size sheets. The diagram shall clearly show activities on the critical path. Include the following information for each activity:

a. Activity ID

b. Activity Description

c. Original Duration in Work Days

d. Remaining duration

e. Percent Complete

f. Early Start Date

g. Early Finish Date

h. Total Float

1.6.2 Schedule Activity Properties and Level of Detail

The NAS shall identify all Government, Construction Quality Management (CQM), Construction activities planned for the project and all other activities that could impact project completion if delayed. Separate activities shall be created for each Phase, Area, Floor Level and Location the activity is occurring. Activity categories included in the schedule are specified below.

With the exception of the Contract Award and Contract Completion Date (CCD) milestone activities, no activity shall be open-ended; each activity shall have predecessor and successor ties. Once an activity exists on the schedule it may not be deleted or renamed to change the scope of the activity and shall not be removed from the schedule logic without approval from the Contracting Officer. The ID number for a deleted activity shall not be re-used for another activity. No more than 20 percent of the activities shall be critical or near critical. Critical is defined as having zero days of Total Float. "Near Critical" is defined as having Total Float of 1 to 14 days. Contractor activities shall be driven by calendars that reflect Saturdays, Sundays and all Federal Holidays as non-work days.

1.6.2.1 Activity Categories

a. Procurement Activities: Examples of procurement activities include, but are not limited to; Material/equipment submittal preparation, submittal and approval of material/equipment; material/equipment fabrication and delivery, and material/equipment on-site. As a minimum, separate procurement activities will be provided for critical items, long lead items, items requiring government approval and material/equipment procurement for which payment will be requested in advance of installation. The Contractor shall show each delivery with relationship tie to the Construction Activity specifically for the delivery.

b. Government Activities: Government and other agency activities that could impact progress shall be clearly identified. Government activities include, but are not limited to; Government approved submittal reviews, Government conducted inspections/tests, environmental permit approvals by State regulators, utility outages, Design Start, Construction Start, (including Design/Construction Start for each Fast-Track Phase, and delivery of Government Furnished Material/Equipment.

c. Quality Management (QM) Activities: CQM Activities shall identify the Preparatory Phase and Initial Phase for each Definable Feature of Work identified in the Contractor's Quality Control Plan. These activities shall be added to each Three-Week Look Ahead Schedule referenced in the paragraph entitled "THREE-WEEK LOOK AHEAD SCHEDULE" and will also be included in each monthly update. The Follow-up Phase will be represented by the Construction Activities in the Baseline Schedule and in the schedule updates.

d. Construction Activities: No on-site construction activity shall have a duration in excess of 20 working days. Separate construction activities shall be created for each Phase, Area, Floor Level and Location the activity is occurring. Contractor activities will be driven by calendars that reflect Saturdays, Sundays and all Federal Holidays as non-work days, unless otherwise defined in this contract.

e. Turnover and Closeout Activities: Include a separate section with all items on the NAVFAC Red Zone Checklist/POAM that are applicable to this project. The checklist will be provided at the Preconstruction Meeting. As a minimum, this will include all testing, specialized inspection activities, Pre-Final inspection, Punch List Completion, Final Inspection and Acceptance. Add a milestone for the Facility Turnover Planning Meeting at approximately 75 percent construction contract completion or three to six months prior to BOD, whichever is sooner.

1.6.2.2 Contract Milestones and Constraints

a. Project Start Date Milestones: The Contractor shall include as the first activity on the schedule a start milestone titled "Contract Award", which shall have a Mandatory Start constraint equal to the Contract Award Date.

b. Projected Completion Milestone: The Contractor shall include an unconstrained finish milestone on the schedule titled "Projected Completion". Projected Completion is defined as the point in time the Government would consider the project complete and ready for its intended use. This milestone shall have the Contract Completion (CCD) milestone as its only successor.

c. Contract Completion Date (CCD) Milestone: The Contractor shall include as the last activity on the schedule a finish milestone titled "Contract Completion (CCD)", which shall have a Mandatory Finish constraint equal to the current Contract Completion Date. Calculation of schedule updates shall be such that if the finish of the "Projected Completion" milestone falls after the contract completion date, then negative float will be calculated on the longest path and if the finish of the "Projected Completion" milestone falls before the contract completion date, the float calculation shall reflect positive float on the longest path. The only predecessor to the Contract Completion Date Milestone shall be the Projected Completion milestone.

1.6.2.3 Activity Code

At a minimum, the Contractor shall establish activity codes identified in this specification and 3 additional activity codes identified by the Contracting Officer. Once established, activity codes and values cannot be changed without approval by the Contracting Officer.

a. Phase: All activities shall be assigned a 4-digit code value based on the contract phase it occurs in.

b. Area Code: All activities shall be assigned an area code value identifying the Area in which the activity occurs. Activities shall not belong to more than one area. Area is defined as a distinct space, function or activity category; such as, separate structure(s), sitework,

project summary, construction quality management, material/equipment procurement, etc.

c. Work Item: All activities in the project schedule shall be assigned a 4-digit Work Item code value. Examples of Work Item code values include but are not limited to water lines, drain lines, building pad and foundation, slab on grade, walls and columns, suspended slab, roof structure, roofing, exterior finish systems, interior rough-in, and finishes, etc.

d. Location 1: Assign a 4-digit Location 1 code value to activities associated with multistory structures. Code values are used to identify the floor level where an activity is occurring.

e. Location 2: Assign a 4-digit Location 2 code value to all activities to identify the location within an Area, Work Item or Building Level that an activity is occurring.

f. Responsibility Code: All activities in the project schedule shall be identified with the party responsible for completing the task. Activities shall not belong to more than one responsible party.

1.6.2.4 Anticipated Weather Delays

The Contractor shall use the National Oceanic and Atmospheric Administration's (NOAA) historical monthly averages for the NOAA location closest to the project site following schedule of anticipated monthly non-work days due to adverse weather as the basis for establishing a "Weather Calendar" showing the number of anticipated non-workdays for each month due to adverse weather, Saturdays, Sundays and all Federal Holidays as non-work days.

MONTHLY ANTICIPATED ADVERSE WEATHER DELAYS

JAN	FEB	MAR	APR	MAY	JUN	JUL	AUG	SEP	OCT	NOV	DEC
_	_	_	_	_	_	_	_	_	_	_	_

Assign the Weather Calendar to any activity that could be impacted by adverse weather. The Contracting Officer will issue a modification in accordance with the contract clauses, giving the Contractor a time extension for the difference of days between the anticipated and actual adverse weather delay if the number of actual adverse weather delay days exceeds the number of days anticipated for the month in which the delay occurs and the adverse weather delayed activities critical to contract completion. A lost workday due to weather conditions is defined as a day in which the Contractor cannot work at least 50 percent of the day on the impacted activity.

1.6.2.5 Cost Loading

a. Cost Loading Activities: Material and Equipment Costs for which payment will be requested in advance of installation shall be assigned to their respective procurement activity (i.e., the material/equipment on-site activity). All other construction costs shall be assigned to their respective Construction Activities. The value of inspection/testing activities will not be less than 10 percent of the total costs for

Procurement and Construction Activities. Evenly disperse overhead and profit to each activity over the duration of the project.

b. Quantities and Units of Measure: Each cost loaded activity shall have a detailed quantity breakdown and unit of measure.

1.6.3 Schedule Software Settings and Restrictions

a. Activity Constraints: Date/time constraint(s), other than those required by the contract, will not be allowed unless accepted by the Contracting Officer. Identify any constraints proposed and provide an explanation for the purpose of the constraint in the Narrative Report.

b. Default Progress Data Disallowed: Actual Start and Actual Finish dates on the CPM schedule shall match the dates on the Contractor Quality Control and Production Reports.

c. Software Settings: Schedule calculations and Out-of-Sequence progress (if applicable) shall be handled through Retained Logic, not Progress Override. All activity durations and float values will be shown in days. Activity progress will be shown using Remaining Duration. Default activity type will be set to "Task". The project "Must Finish By" date shall be left blank.

1.6.4 Required Tabular Reports

The following reports shall be included with the schedule submittal:

a. Log Report: Listing of all changes made between the previous schedule and current updated schedule.

b. Narrative Report: Identify and justify; 1) Progress made in each area of the project; 2) Critical Path; 3) Date/time constraint(s), other than those required by the contract 3) Changes in the following; added or deleted activities, original and remaining durations for activities that have not started, logic, milestones, planned sequence of operations, critical path, and cost loading; 4) Any decrease in previously reported activity Earned Amount; 5) Pending items and status thereof, including permits, changes orders, and time extensions; 6) Status of Contract Completion Date and interim milestones; 7) Current and anticipated delays (describe cause of delay and corrective actions(s)); and 8) Description of current and future schedule problem areas. Each entry in the narrative report will cite the respective Activity ID and Activity Description, the date and reason for the change, and description of the change.

c. Earned Value Report: Listing all activities having a budget amount cost loaded. Compilation of total earnings on the project from notice to proceed to current progress payment request. Group and sort activities as directed by the Contracting Officer. Show current budget, previous physical percent complete, to-date physical percent complete, previous earned value, to-date earned value and cost to complete on the report for each activity:

d. Schedule Variance Control (SVC) Diagram: With each schedule submission, provide a SVC diagram showing 1) Cash Flow S-Curves indicating planned project cost based on projected early and late activity finish dates

and 2) Earned Value to-date. Revise Cash Flow S-Curves when the contract is modified, or as directed by the Contracting Officer.

1.7 SUBMISSION AND ACCEPTANCE

1.7.1 Monthly Network Analysis Updates

Contractor and Government representatives shall meet at monthly intervals to review and agree on the information presented in the updated project schedule. The submission of an acceptable, updated schedule to the Government is a condition precedent to the processing of the Contractor's pay request. If a Schedule of Prices is the basis for progress payments, it shall be consistent with the logic and activity breakdowns on the progress schedule. If progress payments are based on a cost-loaded schedule, the Contractor and Government shall agree on percentage of payment for each activity progressed during the update period.

Provide the following with each Schedule submittal:

a. Time Scaled Logic Diagram.

b. Reports listed in paragraph entitled "Required Tabular Reports."

c. Data disks containing the project schedule. Include the back-up native .prx/current mandated schedule program files.

1.7.2 As-Built Schedule

As a condition precedent to the release of retention and making final payment, submit an "As-Built Schedule," as the last schedule update showing all activities at 100 percent completion. This schedule shall reflect the exact manner in which the project was actually constructed.

1.8 CONTRACT MODIFICATION

Submit a Time Impact Analysis with each cost and time proposal for a proposed change. Time Impact Analysis (TIA) shall illustrate the influence of each change or delay on the Contract Completion Date or milestones. No time extensions will be granted nor delay damages paid unless a delay occurs which consumes all available Project Float, and extends the Projected Finish beyond the Contract Completion Date.

a. Each TIA shall be in both narrative and schedule form demonstrating the delay impact. The TIA shall identify the predecessors to the new activities and demonstrate the impacts to successor activities. The Contractor shall run the schedule calculations and submit the impacted schedule with the proposal or claim.

b. The TIA schedule submitted with the proposal shall show all activity progress as of the date of the proposal. If the impact to the schedule occurs prior to the proposal submission, the TIA schedule shall be updated to show all activity progress as of the time of the impact. If the proposed change does not impact the CCD, no TIA shall be required.

c. Submit Data disks containing the TIA schedule. Include the back-up native .prx/current mandated schedule program files.

d. Unless the Contracting Officer requests otherwise, only conformed contract modifications shall be added into the Project NAS.

1.9 PROJECT FLOAT

Project Float is the length of time between the Contractor's Projected Finish Milestone and the Contract Completion Date Milestone. Project Float available in the schedule, at any time shall not be for the exclusive use of either the Government or the Contractor.

1.10 THREE-WEEK LOOK AHEAD SCHEDULE

The Contractor shall prepare and issue a 3-Week Look Ahead schedule to provide a more detailed day-to-day plan of upcoming work identified on the Project Network Analysis Schedule. The work plans shall be keyed to NAS activity numbers and updated each week to show the planned work for the current and following two-week period. Additionally, include upcoming outages, closures, preparatory meetings, and initial meetings. Identify critical path activities on the Three-Week Look Ahead Schedule. The detail work plans are to be bar chart type schedules, maintained separately from the Project NAS on an electronic spreadsheet program and printed on 8 ½ by 11 sheets as directed by the Contracting Officer. Activities shall not exceed 5 working days in duration and have sufficient level of detail to assign crews, tools and equipment required to complete the work. Three hard copies and one electronic file of the 3-Week Look Ahead Schedule shall be delivered to the Contracting Officer no later than 8 a.m. each Monday and reviewed during the weekly CQC Coordination Meeting.

PART 2 PRODUCTS

Not used.

PART 3 EXECUTION

Not used.

-- End of Section --

SECTION 01 33 00

SUBMITTAL PROCEDURES
05/11

PART 1 GENERAL

1.1 SUMMARY

The Contracting Officer may request submittals in addition to those specified when deemed necessary to adequately describe the work covered in the respective sections.

Units of weights and measures used on all submittals are to be the same as those used in the specifications.

Each submittal is to be complete and in sufficient detail to allow ready determination of compliance with contract requirements.

Contractor's Quality Control (CQC) System Manager and the Designer of Record, if applicable, to check and approve all items prior to submittal and stamp, sign, and date indicating action taken. Proposed deviations from the contract requirements are to be clearly identified. Include within submittals items such as: Contractor's, manufacturer's, or fabricator's drawings; descriptive literature including (but not limited to) catalog cuts, diagrams, operating charts or curves; test reports; test cylinders; samples; O&M manuals (including parts list); certifications; warranties; and other such required submittals.

Submittals requiring Government approval are to be scheduled and made prior to the acquisition of the material or equipment covered thereby. Pick up and dispose of samples not incorporated into the work in accordance with manufacturer's Material Safety Data Sheets (MSDS) and in compliance with existing laws and regulations.

1.2 DEFINITIONS

1.2.1 Submittal Descriptions (SD)

Submittals requirements are specified in the technical sections. Submittals are identified by Submittal Description (SD) numbers and titles as follows:

SD-01 Preconstruction Submittals

Submittals which are required prior to start of construction (work), issuance of contract notice to proceed or commencing work on site or the start of the next major phase of the construction on a multi-phase contract, includes schedules, tabular list of data, or tabular list including location, features, or other pertinent information regarding products, materials, equipment, or components to be used in the work.

Certificates of insurance

Surety bonds

List of proposed Subcontractors

List of proposed products

Construction Progress Schedule

Network Analysis Schedule (NAS)

Submittal register

Schedule of prices

Health and safety plan

Work plan

Quality Control (QC) plan

Environmental protection plan

SD-03 Product Data

Catalog cuts, illustrations, schedules, diagrams, performance charts, instructions and brochures illustrating size, physical appearance and other characteristics of materials, systems or equipment for some portion of the work.

Samples of warranty language when the contract requires extended product warranties.

SD-04 Samples

Color samples from the manufacturer's standard line (or custom color samples if specified) to be used in selecting or approving colors for the project.

SD-07 Certificates

Statements printed on the manufacturer's letterhead and signed by responsible officials of manufacturer of product, system or material attesting that product, system or material meets specification requirements. Must be dated after award of project contract and clearly name the project.

Document required of Contractor, or of a manufacturer, supplier, installer or Subcontractor through Contractor, the purpose of which is to further quality of orderly progression of a portion of the work by documenting procedures, acceptability of methods or personnel qualifications.

Confined space entry permits.

Text of posted operating instructions.

SD-08 Manufacturer’s Instructions

Preprinted material describing installation of a product, system or material, including special notices and (MSDS) concerning impedances, hazards and safety precautions.

SD-10 Operation and Maintenance Data

Data that is furnished by the manufacturer, or the system provider, to the equipment operating and maintenance personnel, including manufacturer's help and product line documentation necessary to maintain and install equipment. This data is needed by operating and maintenance personnel for the safe and efficient operation, maintenance and repair of the item.

This data is intended to be incorporated in an operations and maintenance manual or control system.

SD-11 Closeout Submittals

Documentation to record compliance with technical or administrative requirements or to establish an administrative mechanism.

Special requirements necessary to properly close out a construction contract. For example, Record Drawings and as-built drawings. Also, submittal requirements necessary to properly close out a major phase of construction on a multi-phase contract.

1.2.2 Approving Authority

Office or designated person authorized to approve submittal.

1.2.3 Work

As used in this section, on- and off-site work required by contract documents, including labor necessary to produce submittals, except those SD-01 Pre-Work Submittals noted above, construction, materials, products, equipment, and systems incorporated or to be incorporated in such construction.

1.3 SUBMITTALS

Government approval is required for submittals with a "G" designation; submittals not having a "G" designation are for Contractor QC approval for Navy and Air Force projects and for information only for Army projects. When used, a designation following the "G" designation identifies the office that will review the submittal for the Government. Submit the following in accordance with this section.

SD-01 Preconstruction Submittals

Submittal Register; G

1.4 SUBMITTAL CLASSIFICATION

Submittals are classified as follows:

1.4.1 Designer of Record Approved (DA)

Designer of Record (DOR) approval is required for extensions of design, critical materials, any deviations from the solicitation, the accepted proposal, or the completed design, equipment whose compatibility with the entire system must be checked, and other items as designated by the Contracting Officer. Within the terms of the Contract Clause entitled, "Specifications and Drawings for Construction," they are considered to be "shop drawings." Contractor to provide the Government with the number of copies designated hereinafter of all DOR approved submittals. The Government may review any or all Designer of Record approved submittals for conformance to the Solicitation, Accepted Proposal and the completed design. The Government will review all submittals designated as deviating from the Solicitation or Accepted Proposal, as described below. Design submittals to be in accordance with Section 01 33 16 DESIGN AFTER AWARD. Generally, design submittals should be identified as SD-05 Design Data submittals.

1.4.2 Government Approved; G

Government approval is required for extensions of design, critical materials, deviations, equipment whose compatibility with the entire system must be checked, and other items as designated by the Contracting Officer. Government approval is required for any deviations from the Solicitation or Accepted Proposal and other items as designated by the Contracting Officer. Within the terms of the Contract Clause entitled, "Specifications and Drawings for Construction," they are considered to be "shop drawings."

1.4.3 Government Conformance Review of Design (not used)

1.4.4 Designer of Record Approved/Government Conformance Review (not used)

1.4.5 Designer of Record Approved/Government Approved (not used)

1.4.6 Information Only

Submittals not requiring Government approval will be for information only.

1.4.7 Forwarding Submittals Requiring Government Approval

As soon as practicable after award of contract and before procurement of materials, forward to the CME all submittals required in the technical sections of the specifications including product data and samples.

1.5 PREPARATION

1.5.1 Transmittal Form

Transmit each submittal, except sample installations and sample panels to office of approving authority. Transmit submittals with transmittal form prescribed by Contracting Officer and standard for project. On the transmittal form identify Contractor, indicate date of submittal, and include information prescribed by transmittal form and required in paragraph entitled, "Identifying Submittals," of this section. Process transmittal forms to record actions regarding samples.

1.5.2 Identifying Submittals

When submittals are provided by a Subcontractor, the Prime Contractor is to prepare, review and stamp with Contractor's approval all specified submittals prior to submitting for Government approval.

Identify submittals, except sample installations and sample panels, with the following information permanently adhered to or noted on each separate component of each submittal and noted on transmittal form. Mark each copy of each submittal identically, with the following:

a. Project title and location.

b. Construction contract number.

c. Date of the drawings and revisions.

d. Name, address, and telephone number of subcontractor, supplier, manufacturer and any other subcontractor associated with the submittal.

e. Section number of the specification section by which submittal is required.

f. Submittal description (SD) number of each component of submittal.

g. When a resubmission, add alphabetic suffix on submittal description, for example, submittal 18 would become 18A, to indicate resubmission.

h. Product identification and location in project.

1.5.3 Format for SD-02 Shop Drawings (not used)

1.5.4 Format of SD-03 Product Data and SD-08 Manufacturer's Instructions

Present product data submittals for each section as a complete, bound volume. Include table of contents, listing page and catalog item numbers for product data.

Indicate, by prominent notation, each product which is being submitted; indicate specification section number and paragraph number to which it pertains.

Supplement product data with material prepared for project to satisfy submittal requirements for which product data does not exist. Identify this material as developed specifically for project, with information and format as required for submission of SD-07 Certificates.

Include the manufacturer's name, trade name, place of manufacture, and catalog model or number on product data. Also include applicable federal, military, industry and technical society publication references. Should manufacturer's data require supplemental information for clarification, submit as specified for SD-07 Certificates.

Where equipment or materials are specified to conform to industry and technical society reference standards of the organizations such as American National Standards Institute (ANSI), ASTM International (ASTM), National Electrical Manufacturer's Association (NEMA), Underwriters

Laboratories (UL), and Association of Edison Illuminating Companies (AEIC), submit proof of such compliance. The label or listing by the specified organization will be acceptable evidence of compliance. In lieu of the label or listing, submit a certificate from an independent testing organization, competent to perform testing, and approved by the Contracting Officer. State on the certificate that the item has been tested in accordance with the specified organization's test methods and that the item complies with the specified organization's reference standard.

Collect required data submittals for each specific material, product, unit of work, or system into a single submittal and marked for choices, options, and portions applicable to the submittal. Mark each copy of the product data identically. Partial submittals will not be accepted for expedition of construction effort.

Submit manufacturer's instructions prior to installation.

1.5.5 Format of SD-04 Samples

Furnish samples in sizes below, unless otherwise specified or unless the manufacturer has prepackaged samples of approximately same size as specified:

a. Sample of Equipment or Device: Full size.

b. Sample of Materials Less Than 2 by 3 inches: Built up to A4 8 1/2 by 11 inches.

c. Sample of Materials Exceeding A4 8 1/2 by 11 inches: Cut down to A4 8 1/2 by 11 inches and adequate to indicate color, texture, and material variations.

d. Sample of Linear Devices or Materials: 10 inch length or length to be supplied, if less than 10 inches. Examples of linear devices or materials are conduit and handrails.

e. Sample of Non-Solid Materials: Pint. Examples of non-solid materials are sand and paint.

f. Color Selection Samples: 2 by 4 inches. Where samples are specified for selection of color, finish, pattern, or texture, submit the full set of available choices for the material or product specified. Sizes and quantities of samples are to represent their respective standard unit.

g. Sample Panel: 4 by 4 feet.

h. Sample Installation: 100 square feet.

Samples Showing Range of Variation: Where variations in color, finish, pattern, or texture are unavoidable due to nature of the materials, submit sets of samples of not less than three units showing extremes and middle of range. Mark each unit to describe its relation to the range of the variation.

Reusable Samples: Incorporate returned samples into work only if so specified or indicated. Incorporated samples are to be in undamaged condition at time of use.

Recording of Sample Installation: Note and preserve the notation of area constituting sample installation but remove notation at final clean up of project.

When color, texture or pattern is specified by naming a particular manufacturer and style, include one sample of that manufacturer and style, for comparison.

1.5.6 Format of SD-05 Design Data and SD-07 Certificates

Provide design data and certificates on 8 1/2 by 11 inches paper. Provide a bound volume for submittals containing numerous pages.

1.5.7 Format of SD-06 Test Reports and SD-09 Manufacturer's Field Reports

Provide reports on 8 1/2 by 11 inches paper in a complete bound volume.

Indicate by prominent notation, each report in the submittal. Indicate specification number and paragraph number to which it pertains.

1.5.8 Format of SD-01 Preconstruction Submittals and SD-11 Closeout Submittals

When submittal includes a document which is to be used in project or become part of project record, other than as a submittal, do not apply Contractor's approval stamp to document, but to a separate sheet accompanying document.

1.6 QUANTITY OF SUBMITTALS

1.6.1 Number of Copies of SD-02 Shop Drawings (not used)

1.6.2 Number of Copies of SD-03 Product Data and SD-08 Manufacturer's Instructions

Submit six copies of submittals of shop drawings requiring review and approval only by QC organization and seven copies of shop drawings requiring review and approval by Contracting Officer.

1.6.3 Number of Samples SD-04 Samples

a. Submit two samples, or two sets of samples showing range of variation, of each required item.

b. Submit one sample panel or provide one sample installation where directed. Include components listed in technical section or as directed.

c. Submit one sample installation, where directed.

d. Submit one sample of non-solid materials.

1.6.4 Number of Copies SD-05 Design Data and SD-07 Certificates

Submit six copies of submittals of shop drawings requiring review and approval only by QC organization and seven copies of shop drawings requiring review and approval by Contracting Officer.

1.6.5 Number of Copies SD-06 Test Reports and SD-09 Manufacturer's Field Reports

Submit six copies of submittals of shop drawings requiring review and approval only by QC organization and seven copies of shop drawings requiring review and approval by Contracting Officer.

1.6.6 Number of Copies of SD-10 Operation and Maintenance Data (not used)

1.6.7 Number of Copies of SD-01 Preconstruction Submittals and SD-11 Closeout Submittals

Unless otherwise specified, submit three sets of administrative submittals.

1.7 INFORMATION ONLY SUBMITTALS

Normally submittals for information only will not be returned. Approval of the Contracting Officer is not required on information only submittals. The Government reserves the right to require the Contractor to resubmit any item found not to comply with the contract. This does not relieve the Contractor from the obligation to furnish material conforming to specifications; will not prevent the Contracting Officer from requiring removal and replacement of nonconforming material incorporated in the work; and does not relieve the Contractor of the requirement to furnish samples for testing by the Government laboratory or for check testing by the Government in those instances where the technical specifications so prescribe.

1.8 VARIATIONS

Variations from contract requirements require both Designer of Record (DOR) and Government approval pursuant to contract clause FAR 52.236-21 and will be considered where advantageous to Government.

1.8.1 Considering Variations

Discussion with Contracting Officer prior to submission will help ensure functional and quality requirements are met and minimize rejections and re-submittals. When contemplating a variation which results in lower cost, consider submission of the variation as a Value Engineering Change Proposal (VECP).

Specifically point out variations from contract requirements in transmittal letters. Failure to point out deviations may result in the Government requiring rejection and removal of such work at no additional cost to the Government.

1.8.2 Proposing Variations

When proposing variation, deliver written request to the Contracting Officer, with documentation of the nature and features of the variation

and why the variation is desirable and beneficial to Government. If lower cost is a benefit, also include an estimate of the cost savings. In addition to documentation required for variation, include the submittals required for the item. Clearly mark the proposed variation in all documentation.

1.8.3 Warranting That Variations Are Compatible

When delivering a variation for approval, Contractor warrants that this contract has been reviewed to establish that the variation, if incorporated, will be compatible with other elements of work.

1.8.4 Review Schedule Is Modified

In addition to normal submittal review period, a period of 10 working days will be allowed for consideration by the Government of submittals with variations.

1.9 SUBMITTAL REGISTER

Prepare and maintain submittal register, as the work progresses. Use electronic submittal register program furnished by the Government or any other format. Do not change data which is output in columns (c), (d), (e), and (f) as delivered by Government; retain data which is output in columns (a), (g), (h), and (i) as approved. A submittal register showing items of equipment and materials for which submittals are required by the specifications is provided as an attachment. This list may not be all inclusive and additional submittals may be required.

Column (c): Lists specification section in which submittal is required.

Column (d): Lists each submittal description (SD No. and type) required in each specification section.

Column (e): Lists one principal paragraph in specification section where a material or product is specified. This listing is only to facilitate locating submitted requirements. Do not consider entries in column (e) as limiting project requirements.

Column (f): Indicate approving authority for each submittal.

1.9.1 Use of Submittal Register

Submit submittal register as an electronic database, using submittals management program furnished to Contractor. Submit with QC plan and project schedule. Verify that all submittals required for project are listed and add missing submittals. Coordinate and complete the following fields on the register submitted with the QC plan and the project schedule:

Column (a) Activity Number: Activity number from the project schedule.

Column (g) Contractor Submit Date: Scheduled date for approving authority to receive submittals.

Column (h) Contractor Approval Date: Date Contractor needs approval of submittal.

Column (i) Contractor Material: Date that Contractor needs material delivered to Contractor control.

1.9.2 Contractor Use of Submittal Register

Update the following fields in the Government-furnished submittal register program or equivalent fields in program utilized by Contractor with each submittal throughout contract.

Column (b) Transmittal Number: Contractor assigned list of consecutive numbers.

Column (j) Action Code (k): Date of action used to record Contractor's review when forwarding submittals to QC.

Column (l) List date of submittal transmission.

Column (q) List date approval received.

1.9.3 Approving Authority Use of Submittal Register

Update the following fields in the Government-furnished submittal register program or equivalent fields in program utilized by Contractor.

Column (b) Transmittal Number: Contractor assigned list of consecutive numbers.

Column (l) List date of submittal receipt.

Column (m) through (p) List Date related to review actions.

Column (q) List date returned to Contractor.

1.9.4 Action Codes

Entries for columns (j) and (o), are to be used are as follows (others may be prescribed by Transmittal Form):

1.9.4.1 Government Review Action Codes

"A" - "Approved as submitted"; "Completed"

"B" - "Approved, except as noted "; "Completed"

"C" - "Approved, resubmission required"; "Resubmit"

"D" - "Returned by correspondence"; "Completed"

"E" - "Disapproved (See attached)"; "Resubmit"

"F" - "Receipt acknowledged"; "Completed"

"G" - "Other (Specify)"; "Resubmit"

"X" - "Receipt acknowledged, does not comply"; "Resubmit"

1.9.4.2 Contractor Action Codes

NR - Not Received

AN - Approved as noted

A - Approved

RR - Disapproved, Revise, and Resubmit

1.9.5 Copies Delivered to the Government

Deliver one copy of submittal register updated by Contractor to Government with each invoice request. Deliver in electronic format unless a paper copy is requested by Contracting Officer.

1.10 SCHEDULING

Schedule and submit concurrently submittals covering component items forming a system or items that are interrelated. Include certifications to be submitted with the pertinent drawings at the same time. No delay damages or time extensions will be allowed for time lost in late submittals.

a. Coordinate scheduling, sequencing, preparing and processing of submittals with performance of work so that work will not be delayed by submittal processing. Allow for potential resubmittal of requirements.

b. Submittals called for by the contract documents will be listed on the register. If a submittal is called for but does not pertain to the contract work, the Contractor is to include the submittal in the register and annotate it "N/A" with a brief explanation. Approval by the Contracting Officer does not relieve the Contractor of supplying submittals required by the contract documents but which have been omitted from the register or marked "N/A."

c. Re-submit register and annotate monthly by the Contractor with actual submission and approval dates. When all items on the register have been fully approved, no further re-submittal is required.

d. Carefully control procurement operations to ensure that each individual submittal is made on or before the Contractor scheduled submittal date shown on the approved "Submittal Register."

e. Except as specified otherwise, allow review period, beginning with receipt by approving authority, that includes at least 5 working days for submittals for QC Manager approval and 10 working days for submittals for Contracting Officer approval. Period of review for submittals with Contracting Officer approval begins when Government receives submittal from QC organization.

f. Period of review for each resubmittal is the same as for initial submittal.

At the Preconstruction conference, provide, for approval by the Contracting Officer, the following schedule of submittals:

a. A schedule of shop drawings and technical submittals required by the specifications and drawings. Indicate the specification or drawing reference requiring the submittal; the material, item, or process for which the submittal is required; the "SD" number and identifying title of the submittal; the Contractor's anticipated submission date and the approval need date.

b. A separate schedule of other submittals required under the contract but not listed in the specifications. Schedule will indicate the contract requirement reference; the type or title of the submittal; the Contractor's anticipated submission date and the approved need date (if approval is required).

1.10.1 Reviewing, Certifying, Approving Authority

The QC organization is responsible for reviewing and certifying that submittals are in compliance with contract requirements. Approving authority on submittals is QC Manager unless otherwise specified for specific submittal. At each "Submittal" paragraph in individual specification sections, a notation "G," following a submittal item, indicates Contracting Officer is approving authority for that submittal item.

1.10.2 Constraints

Conform to provisions of this section, unless explicitly stated otherwise for submittals listed or specified in this contract.

Submit complete submittals for each definable feature of work. Submit at the same time components of definable feature interrelated as a system.

When acceptability of a submittal is dependent on conditions, items, or materials included in separate subsequent submittals, submittal will be returned without review.

Approval of a separate material, product, or component does not imply approval of assembly in which item functions.

1.10.3 QC Organization Responsibilities

a. Note date on which submittal was received from Contractor on each submittal.

b. Review each submittal; and check and coordinate each submittal with requirements of work and contract documents.

c. Review submittals for conformance in compliance with contract documents.

d. Act on submittals, determining appropriate action based on QC organization's review of submittal.

(1) When QC Manager is approving authority, take appropriate action on submittal from the possible actions defined in paragraph entitled, "Approved/Accepted Submittals," of the section.

(2) When Contracting Officer is approving authority or when variation has been proposed, forward submittal to Government with certifying statement or return submittal marked "not reviewed" or "revise and resubmit" as appropriate. The QC organization's review of submittal determines appropriate action.

e. Ensure that material is clearly legible.

f. Stamp each sheet of each submittal with QC certifying statement or approving statement, except that data submitted in bound volume or on one sheet printed on two sides may be stamped on the front of the first sheet only.

(1) When approving authority is Contracting Officer, QC organization will certify submittals forwarded to Contracting Officer with the following certifying statement:

"I hereby certify that the (equipment) (material) (article) shown and marked in this submittal is that proposed to be incorporated with contract Number N40192-14-R-2900, is in compliance with the contract drawings and specifications, can be installed/applied in the allocated places, and is submitted for Government approval.

Certified by Submittal Reviewer _____, Date _____
(Signature when applicable)

Certified by QC Manager _____, Date _____"
(Signature)

(2) When approving authority is QC Manager, QC Manager will use the following approval statement when returning submittals to Contractor as "Approved" or "Approved as Noted."

"I hereby certify that the (equipment) (material) (article) shown and marked in this submittal is that proposed to be incorporated with contract Number N40192-14-R-2900, is in compliance with contract drawings and specifications, can be installed/applied in the allocated places, and is approved for use.

Certified by Submittal Reviewer _____, Date _____
(Signature when applicable)

Approved by QC Manager _____, Date _____"
(Signature)

g. Sign certifying statement or approval statement. The QC organization member designated in the approved QC plan is the person signing certifying statements. The use of original ink for signatures is required. Stamped signatures are not acceptable.

h. Update submittal register database as submittal actions occur and maintain the submittal register at project site until final acceptance of all work by Contracting Officer.

i. Retain a copy of approved submittals at project site, including Contractor's copy of approved samples.

1.11 GOVERNMENT APPROVING AUTHORITY

When approving authority is Contracting Officer, the Government will:

a. Note date on which submittal was received from QC Manager.

b. Review submittals for approval within scheduling period specified and only for conformance with project design concepts and compliance with contract documents.

c. Identify returned submittals with one of the actions defined in paragraph entitled, "Review Notations," of this section and with markings appropriate for action indicated.

Upon completion of review of submittals requiring Government approval, stamp and date approved submittals. Two copies of the approved submittal will be retained by the Contracting Officer and four copies of the submittal will be returned to the Contractor. If the Government performs a conformance review of other Designer of Record approved submittals, the submittals will be so identified and returned, as described above.

1.11.1 Review Notations

Contracting Officer review will be completed within 14 calendar days after date of submission. Submittals will be returned to the Contractor with the following notations:

a. Submittals marked "approved" or "accepted" authorize the Contractor to proceed with the work covered.

b. Submittals marked "approved as noted" "or approved except as noted, resubmittal not required," authorize the Contractor to proceed with the work covered provided he takes no exception to the corrections.

c. Submittals marked "not approved" or "disapproved," or "revise and resubmit," indicate noncompliance with the contract requirements or design concept, or that submittal is incomplete. Resubmit with appropriate changes. No work shall proceed for this item until resubmittal is approved.

d. Submittals marked "not reviewed" will indicate submittal has been previously reviewed and approved, is not required, does not have evidence of being reviewed and approved by Contractor, or is not complete. A submittal marked "not reviewed" will be returned with an explanation of the reason it is not reviewed. Resubmit submittals returned for lack of review by Contractor or for being incomplete, with appropriate action, coordination, or change.

1.12 DISAPPROVED OR REJECTED SUBMITTALS

Contractor shall make corrections required by the Contracting Officer. If the Contractor considers any correction or notation on the returned submittals to constitute a change to the specifications; notice as required under the clause entitled, "Changes," is to be given to the Contracting Officer. Contractor is responsible for the dimensions and design of connection details and construction of work. Failure to point

out deviations may result in the Government requiring rejection and removal of such work at the Contractor's expense.

If changes are necessary to submittals, the Contractor shall make such revisions and submission of the submittals in accordance with the procedures above. No item of work requiring a submittal change is to be accomplished until the changed submittals are approved.

1.13 APPROVED/ACCEPTED SUBMITTALS

The Contracting Officer's approval or acceptance of submittals is not be construed as a complete check, and indicates only that the general method of construction, materials, detailing and other information are satisfactory in a general method of construction, materials and other information appear to meet the Solicitation and Accepted Proposal.

Approval or acceptance will not relieve the Contractor of the responsibility for any error which may exist, as the Contractor under the Contractor Quality Control (CQC) requirements of this contract is responsible for dimensions, the design of adequate connections and details, and the satisfactory construction of all work design, dimensions, all design extensions, such as the design of adequate connections and details, etc., and the satisfactory construction of all work.

After submittals have been approved or accepted by the Contracting Officer, no resubmittal for the purpose of substituting materials or equipment will be considered unless accompanied by an explanation of why a substitution is necessary.

1.14 APPROVED SAMPLES

Approval of a sample is only for the characteristics or use named in such approval and is not be construed to change or modify any contract requirements. Before submitting samples, the Contractor to assure that the materials will be available in quantities required in the project. No change or substitution will be permitted after a sample has been approved.

Match the approved samples for materials incorporated in the work. If requested, approved samples, including those which may be damaged in testing, will be returned to the Contractor, at his expense, upon completion of the contract. Samples not approved will also be returned to the Contractor at its expense, if so requested.

Failure of any materials to pass the specified tests will be sufficient cause for refusal to consider, under this contract, any further samples of the same brand or make of that material. Government reserves the right to disapprove any material or equipment which previously has proved unsatisfactory in service.

Samples of various materials delivered on the site or in place may be taken by the Contracting Officer for testing. Samples failing to meet contract requirements will automatically void previous approvals. Contractor to replace such materials to meet contract requirements.

Approval of the Contractor's samples by the Contracting Officer does not relieve the Contractor of his responsibilities under the contract.

1.15 WITHHOLDING OF PAYMENT

Payment for materials incorporated in the work will not be made if required approvals have not been obtained No payment will be made for any materials incorporated into the work for any conformance review submittals or information only submittals found to contain errors or deviations from the Solicitation or Accepted Proposal.

1.16 PROGRESS SCHEDULE

1.16.1 Bar Chart

a. Submit the progress chart, for approval by the Contracting Officer, at the Preconstruction Conference in one reproducible and 4 copies.

b. Prepare the progress chart in the form of a bar chart utilizing form "Construction Progress Chart" or comparable format acceptable to the Contracting Officer.

c. Include no less than the following information on the progress chart:

(1) Break out by major headings for primary work activity.

(2) A line item break out under each major heading sufficient to track the progress of the work.

(3) A line item showing contract finalization task which includes punch list, clean-up and demolition and repairs.

(4) A materials bar and a separate labor bar for each line item. Both bars will show the scheduled percentage complete for any given date within the contract performance period. Labor bar will also show the number of men (man-load) expected to be working on any given date within the contract performance period.

(5) The estimated cost and percentage weight of total contract cost for each materials and labor bar on the chart.

(6) Separate line items for mobilization and drawing submittal and approval. (These items are to show no associated costs.)

d. Update the progress schedule in one reproduction and 4 copies every 30 calendar days throughout the contract performance period.

1.16.2 Project Network Analysis

Submit the initial progress schedule within 21 calendar days of notice to proceed. Schedule is to be updated and resubmitted monthly beginning 7 calendar days after return of the approved initial schedule. Updating to entail complete revision of the graphic and data displays incorporating changes in scheduled dates and performance periods. Redlined updates will only be acceptable for use as weekly status reviews.

Contractor to provide a single point contact from his on-site organization as his Schedule Specialist. Schedule Specialist is to have the responsibility of updating and coordinating the schedule with actual job conditions. Schedule Specialist to participate in weekly status meetings

and present current information on the status of purchase orders, off-site fabrication, materials deliveries, Subcontractor activities, anticipated needs for Government furnished equipment, and any problem which may impact the contract performance period.

Include the following in the project network analysis:

a. Graphically display with the standard network or arrow diagram capable of illustrating the required data. Drafting to be computer generated on standard 24 by 36 inch (nominal size) drafting sheets or on small 279 by 432 millimeter 11 by 17 inch minimum sheets with separate overview and detail breakouts. Provide a project network analysis that is legible with a clear, consistent method for continuations and detail referencing. Clearly delineate the critical path on the display. Clearly indicate the contract milestone date on the project network analysis graphic display.

b. Data is to be presented as a separate printout on paper or, where feasible, may be printed on the same sheet as the graphic display. Data is to be organized in a logical coherent display capable of periodic updating.

c. Include within the data verbal activity descriptions with a numerical ordering system cross referenced to the graphic display. Additionally, costs (broken down into separate materials and costs), duration, early start date, early finish date, late start date, late finish date, and float are to be detailed for each activity. A running total of the percent completion based on completed activity costs versus total contract cost is to be indicated. A system for indicating scheduled versus actual activity dates and durations is also to be provided.

d. Sufficient detail to facilitate the Contractor's control of the job and to allow the Contracting Officer to readily follow progress for portions of the work should be shown within the schedule.

1.17 STATUS REPORT ON MATERIALS ORDERS

Within 14 calendar days after notice to proceed, submit, for approval by the Contracting Officer, an initial material status report on all materials orders. This report will be updated and re-submitted every 14 calendar days as the status on material orders changes.

Report to include list, in chronological order by need date, materials orders necessary for completion of the contract. The following information will be required for each material order listed:

a. Material name, supplier, and invoice number.

b. Bar chart line item or CPM activity number affected by the order.

c. Delivery date needed to allow directly and indirectly related work to be completed within the contract performance period.

d. Current delivery date agreed on by supplier.

e. When item d exceeds item c, the effect that delayed delivery date will have on contract completion date.

f. When item d exceeds item c, a summary of efforts made by the Contractor to expedite the delayed delivery date to bring it in line with the needed delivery date, including efforts made to place the order (or subcontract) with other suppliers.

PART 2 PRODUCTS

Not Used

PART 3 EXECUTION

Not Used

--End of Section--

SECTION 01 35 13

SPECIAL PROJECT PROCEDURES
11/11

PART 1 GENERAL

1.1 REFERENCES

The publications listed below form a part of this specification to the extent referenced. The publications are referred to within the text by the basic designation only.

U.S. FEDERAL AVIATION ADMINISTRATION (FAA)

FAA AC 150/5300-13	(2012; Rev A; Errata 2013) Airport Design
FAA AC 70/7460-1	(2007; Rev K) Obstruction Marking and Lighting

1.2 DEFINITIONS

1.2.1 Landing Areas

"Landing Areas" means:

a. The primary surfaces, comprising the surface of the runway, runway shoulders, and lateral safety zones. The length of each primary surface is the same as the runway length. The width of each primary surface is 2000 feet (1000 feet on each side of the runway centerline).

b. The "clear zone" beyond the ends of each runway is the extension of the primary surface for a distance of 1000 feet beyond each end of each runway.

c. All taxiways, plus the lateral clearance zones along each side for the length of the taxiways (the outer edge of each lateral clearance zone is laterally 250 feet from the far or opposite edge of the taxiway (example: a 75 foot widetaxiway must have a combined width and lateral clearance zone of 425 feet.)

d. All aircraft parking aprons, plus the area 125 feet in width extending beyond each edge all around the aprons.

1.2.2 Safety Precaution Areas

“Safety Precaution Areas” means those portions of approach-departure clearance zones and transitional zones where placement of objects incident to contract performance might result in vertical projections at or above the approach-departure clearance, or the transitional surface.

a. The “approach-departure clearance surface” is an extension of the primary surface and the clear zone at each end of each runway, for a distance of 50,000 feet, first along an inclined (glide angle) and then along a horizontal plane, both flaring symmetrically about the runway centerline extended.

(1) The inclined plane (glide angle) begins in the clear zone 200 feet past the end of the runway (and primary surface) at the same elevation as the end of the runway. It continues upward at a slope of 50:1 (1 foot vertically for each 50 feet horizontally) to an elevation of 500 feet above the established airfield elevation. At that point the plane becomes horizontal, continuing at that same uniform elevation to a point 50,000 feet longitudinally from the beginning of the inclined plane (glide angle) and ending there.

(2) The width of the surface at the beginning of the inclined plane (glide angle) is the same as the width of the clear zone. It then flares uniformly, reaching the maximum width of 16,000 feet at the end.

b. The “approach-departure clearance zone” is the ground area under the approach-departure clearance surface.

c. The “transitional surface” is a sideways extension of all primary surfaces, clear zones, and approach-departure clearance surfaces along inclined planes.

(1) The inclined plane in each case begins at the edge of the surface.

(2) The slope of the incline plane is 7:1 (1 foot vertically for each 7 feet horizontally). It continues to the point of intersection with the:

(a) Inner horizontal surface (which is the horizontal plane 150 feet above the established airfield elevation); or

(b) Outer horizontal surface (which is the horizontal plane 500 feet above the established airfield elevation), whichever is applicable.

d. The “transitional zone” is the ground area under the transitional surface. (It adjoins the primary surface, clear zone, and approach-departure clearance zone.)

1.3 SUBMITTALS

Government approval is required for submittals with a "G" designation; submittals not having a "G" designation are for Contractor Quality Control approval. When used, a designation following the "G" designation identifies the office that will review the submittal for the Government. Submit the following in accordance with Section 01 33 00 SUBMITTAL PROCEDURES:

SD-01 Preconstruction Submittals

Heavy Equipment and Vehicle List

Existing Conditions Survey

Construction Operations Plan

Safety Plan

Schedule of Work

Watercraft list

SD-04 Samples

Model Unit

PART 2 PRODUCTS

2.1 AIRFIELD OBSTRUCTION LIGHTS

Airfield obstruction lights must conform to FAA AC 70/7460-1 and have red or white lenses.

PART 3 EXECUTION

3.1 HAZARDS TO AIRFIELD and HELIPORT OPERATION

In addition to "DFARS 252.236-7005, Airfield Safety Precautions," the following paragraphs apply.

3.1.1 Work in Proximity to Landing Areas, Landing Strips and Landing Pad(s)

Place nothing upon the landing area or applicable portions of safety precaution areas without authority of the Contracting Officer.

Use of landing areas, landing strips and landing pads for purposes other than aircraft operation, is prohibited without permission of the Contracting Officer, and the landing area, landing strip, or landing pad is closed by order of the Contracting Officer and marked as indicated herein.

Accomplish all construction work on the runways, taxiways, and parking aprons and in the end zones of the runways and 75 feet to each side of the runways and taxiways, the landing strip, 75 feet to each side thereof, and on the taxiways and parking aprons and the landing pad(s) with extreme care regarding the operation of aircraft. Cooperate closely, and coordinate with the Operations Officer and the Contracting Officer. Park equipment in an area designated by the Contracting Officer. Parking of equipment, vehicles, or any type of storage overnight or for any extended period of time in the proximity of the landing areas or taxiways, landing strip and landing pad is strictly prohibited. Leave no material in areas where extreme care is to be taken regarding the operation of aircraft.

During periods of active performance of work on the airfield by the Contractor, govern all operations of mobile equipment per the safety provisions.

3.1.2 Schedule of Work/Aircraft Operating Schedules

Schedule work to conform to aircraft operating schedules. The Government will exert every effort to schedule aircraft operations so as to permit the maximum amount of time for the Contractor's activities; however, in the event of emergency, intense operational demands, adverse wind conditions, and other such unforeseen difficulties, the Contractor must cease operations at the specified locations in the aircraft operational

area for the safety of the Contractor and military personnel and Government property. Submit a schedule of the work to the Contracting Officer for transmittal to the Operations Officer describing the work to be accomplished; the location of the work, noting distances from the ends of landing areas, taxiways, landing strips, landing pads and buildings and other structures as necessary; and dates and hours during which the work is to be accomplished. Keep the approved schedule of work current, and notify the Contracting Officer of any changes prior to beginning each day's work.

Prior to commencement of work, submit the following to the Contracting Officer for transmittal to the Operations Officer:

Existing Conditions Survey
Construction Operations Plan
Safety Plan
Heavy Equipment and Vehicle List

Where flying is controlled, additional permission must be obtained from the control tower operator to enter a landing area unless such area is marked as hazardous to aircraft.

3.1.3 Daytime Markings

During daylight, mark stationary and mobile equipment with international orange and white checkered flags, mark the material, and work with yellow flags.

Vehicles operating in the landing area, must be identified by means of a flag on a staff attached to and flying above the vehicle. Flag size must be not less than 3 feet square and consist of a checkered pattern of international orange and white squares not less than 1 foot on each side. Flags varying in any dimension by not more than 10 percent of the specified dimensions are considered to comply with the stated requirements.

3.1.4 Nighttime Markings

During nighttime, which begins 2 hours before sundown and ends 2 hours after sunrise, mark stationary and mobile equipment and material, and work with red lanterns, battery-operated, low-intensity, red flasher lights. Where the Operations Officer and Contracting Officer determines that the red lanterns and red flasher lights may confuse pilots approaching for landings, the Operations Officer and Contracting Officer may direct that the red lanterns and red flasher lights be left off or that the color of the globes lights be changed.

Light construction and installation must comply with FAA AC 70/7460-1. Lights must be operational during periods of reduced visibility, darkness, and as directed by the Contracting Officer.

No separate payments will be made for lighting and protection necessitated by the safety provisions.

3.1.5 Excavation

Open only those trenches for which material is on hand and ready for placing therein. As soon as possible after the material has been placed and work approved, backfill and compact the trenches as specified.

Maintain landing areas, landings strips and landing pads at all times free from hazards, holes, material piles, or projecting shoulders that might damage tires or landing gear. Paved surfaces must be kept clean at all times and free from small stones or other objects which could cause damage to propellers, craft, and personnel.

3.1.6 Contractor Safety Precautions

The Contractor is advised that aircraft operations will produce extremely high noise levels and will induce vibrations in pavements, structures, and equipment in the vicinity, and may result in high velocity flying debris in the area. The Contractor is responsible for providing all necessary protective eye and ear gear and other safety devices for his personnel, for insuring protection of his equipment, and for scheduling the work to eliminate hazards to his personnel and equipment and to prevent damage to work performed by him.

Boundary areas for hazardous work locations and restrictions are defined in FAA AC 150/5300-13. Construction activity within the limits of the boundary areas without approval of the Contracting Officer is prohibited.

Provide a minimum of 2 aviation red or high intensity white obstruction lights on temporary structures (including cranes) over 100 feet above ground level.

3.1.7 Base Civil Engineering (BCE) Work Clearance Request (for Air Force projects)

Obtain an approved BCE Work Clearance Request, AF Form 103, prior to the start of work that disrupts aircraft or vehicular traffic flow, base utility services, fire and intrusion alarm system, or routine activities of the Activity.

3.1.8 Radio Contact

Provide necessary battery powered portable radios, including one radio for the tower. During work within the landing area, have an operator (who speaks fluent English) available for radio contact with the tower at all times. Radio frequency must be approved by the tower.

3.2 HARBOR WATERWAYS

In addition to "DFARS 252.236-7002, Obstruction of Navigable Waterways," obtain from the Operations Officer at the Naval Base, Guam via the Contracting Officer, permission to use Apra Harbor waterways and the regulations and directives governing such usage. Submit a watercraft list with a description of crafts, including sizes, types, numbers and boat crew for approval.

3.2.1 Hazards to Navigation

Maintain complete control of the movement of floating equipment and material. Loose floating equipment and material are not permitted. Keep in readiness at all times a powered craft capable of moving, securing and disposing of floating equipment which may get loose and become a hazard to navigation.

3.2.2 Submarine Cables or Underwater Utilities

Physically locate submarine cables or underwater utilities as indicated prior to performance of work.

3.2.3 AMMUNITION WHARF (KILO Wharf) Operations

Due to the ammunition loading/unloading operations at Kilo Wharf, the Contractor must anticipate delays and disruption in construction activities for a period of 14 consecutive calendar days during the contract. Disruption may range from complete shutdown of construction activity for a prolonged period of time or periodic short term shutdown of less than a full day, but in no event will all such shutdowns in the aggregate exceed 60 calendar days per calendar year. Bidders must take into consideration such delays when preparing their bids.

-- End of Section --

SECTION 01 35 26

GOVERNMENTAL SAFETY REQUIREMENTS
02/12

PART 1 GENERAL

1.1 REFERENCES

The publications listed below form a part of this specification to the extent referenced. The publications are referred to within the text by the basic designation only.

AMERICAN SOCIETY OF SAFETY ENGINEERS (ASSE/SAFE)

ASSE/SAFE A10.32	(2012) Fall Protection
ASSE/SAFE A10.34	(2001; R 2012) Protection of the Public on or Adjacent to Construction Sites
ASSE/SAFE Z359.1	(2007) Safety Requirements for Personal Fall Arrest Systems, Subsystems and Components

ASME INTERNATIONAL (ASME)

ASME B30.22	(2010) Articulating Boom Cranes
ASME B30.3	(2012) Tower Cranes
ASME B30.5	(2011) Mobile and Locomotive Cranes
ASME B30.8	(2010) Floating Cranes and Floating Derricks

NATIONAL AERONAUTICS AND SPACE ADMINISTRATION (NASA)

NASA NPG 8621.1	(2004a) NASA Mishap Reporting, Investigating and Record Keeping Policy
NASA NPG 8715.3	(2004) NASA Safety Manual
NASA-STD 8719.12	(2011; Change 2) Safety Standard for Explosives, Propellants and Pyrotechnics

NATIONAL FIRE PROTECTION ASSOCIATION (NFPA)

NFPA 10	(2013) Standard for Portable Fire Extinguishers
NFPA 241	(2013) Standard for Safeguarding Construction, Alteration, and Demolition Operations
NFPA 306	(2014) Standard for Control of Gas Hazards on Vessels

NFPA 51B	(2014) Standard for Fire Prevention During Welding, Cutting, and Other Hot Work
NFPA 70	(2014; AMD 1 2013; Errata 2013; AMD2 2013) National Electrical Code
NFPA 70E	(2012; Errata 2012) Standard for Electrical Safety in the Workplace

U.S. ARMY CORPS OF ENGINEERS (USACE)

EM 385-1-1	(2008; Errata 1-2010; Changes 1-3 2010; Changes 4-6 2011; Change 7 2012) Safety and Health Requirements Manual

U.S. NATIONAL ARCHIVES AND RECORDS ADMINISTRATION (NARA)

10 CFR 20	Standards for Protection Against Radiation
29 CFR 1910	Occupational Safety and Health Standards
29 CFR 1910.146	Permit-required Confined Spaces
29 CFR 1910.147	Control of Hazardous Energy (Lock Out/Tag Out)
29 CFR 1915	Confined and Enclosed Spaces and Other Dangerous Atmospheres in Shipyard Employment
29 CFR 1919	Gear Certification
29 CFR 1926	Safety and Health Regulations for Construction
29 CFR 1926.1400	Cranes & Derricks in Construction
29 CFR 1926.16	Rules of Construction
29 CFR 1926.450	Scaffolds
29 CFR 1926.500	Fall Protection
CPL 2.100	(1995) Application of the Permit-Required Confined Spaces (PRCS) Standards, 29 CFR 1910.146

U.S. NAVAL FACILITIES ENGINEERING COMMAND (NAVFAC)

NAVFAC P-307	(2009; Change 1 Mar 2011; Change 2 Aug 2011) Management of Weight Handling Equipment

1.2 DEFINITIONS

a. Competent Person for Fall Protection. A person who is capable of identifying hazardous or dangerous conditions in the personal fall arrest system or any component thereof, as well as their application and use with related equipment, and has the authority to take prompt corrective measures to eliminate the hazards of falling.

b. High Visibility Accident. Any mishap which may generate publicity and/or high visibility.

c. Medical Treatment. Treatment administered by a physician or by registered professional personnel under the standing orders of a physician. Medical treatment does not include first aid treatment even through provided by a physician or registered personnel.

d. Operating Envelope. The area surrounding any crane. Inside this "envelope" is the crane, the operator, riggers and crane walkers, rigging gear between the hook and the load, the load and the crane's supporting structure (ground, rail, etc.).

e. Qualified Person for Fall Protection. A person with a recognized degree or professional certificate, and with extensive knowledge, training and experience in the field of fall protection; who is capable of performing design, analysis, and evaluation of fall protection systems and equipment.

f. Recordable Injuries or Illnesses. Any work-related injury or illness that results in:

(1) Death, regardless of the time between the injury and death, or the length of the illness;

(2) Days away from work (any time lost after day of injury/illness onset);

(3) Restricted work;

(4) Transfer to another job;

(5) Medical treatment beyond first aid;

(6) Loss of consciousness; or

(7) A significant injury or illness diagnosed by a physician or other licensed health care professional, even if it did not result in (1) through (6) above.

g. "USACE" property and equipment specified in USACE EM 385-1-1 should be interpreted as Government property and equipment.

h. Weight Handling Equipment (WHE) Accident (Optional on Army projects). A WHE accident occurs when any one or more of the six elements in the operating envelope fails to perform correctly during operation, including operation during maintenance or testing resulting in personnel injury or death; material or equipment damage; dropped load; derailment; two-blocking; overload; and/or collision, including

unplanned contact between the load, crane, and/or other objects. A dropped load, derailment, two-blocking, overload and collision are considered accidents even though no material damage or injury occurs. A component failure (e.g., motor burnout, gear tooth failure, bearing failure) is not considered an accident solely due to material or equipment damage unless the component failure results in damage to other components (e.g., dropped boom, dropped load, roll over, etc.) any mishap meeting the criteria described above shall be documented in both the Contractor Significant Incident Report (CSIR) and using the NAVFAC prescribed Navy Crane Center (NCC) form submitted within five days both as provided by the Contracting Officer. Also, comply with additional requirements and procedures for accidents in accordance with NAVFAC P-307, Section 12.

i. Safety Officer. A qualified or competent officer of the firm who shall be responsible for enforcing and implementing the overall Contractor Safety and Health Program.

j. Site Safety and Health Officer (SSHO). A qualified or competent person who shall be responsible for enforcing and implementing the Contractor's Safety and Health Program at a project site in accordance with the accepted Accident Prevention Plan (APP).

1.3 SUBMITTALS

Government approval is required for submittals with a "G" designation; submittals not having a "G" designation are for Contractor Quality Control approval. When used, a designation following the "G" designation identifies the office that will review the submittal for the Government. Submit the following in accordance with Section 01 33 00 SUBMITTAL PROCEDURES:

SD-01 Preconstruction Submittals

Accident Prevention Plan (APP); G,

Activity Hazard Analysis (AHA); G,

Crane Critical Lift Plan; G,

Proof of qualification for Crane Operators; G,

SD-06 Test Reports

Notification and Reports

Submit reports as their incidence occurs, in accordance with the requirements of the paragraph entitled, "Notification and Reports."

Accident Reports; G,

Crane Reports

Gas Protection for NASA projects

SD-07 Certificates

Confined Space Entry Permit

Hot work permit

License Certificates

Contractor Safety Self-Evaluation Checklist; G,

Certificate of Compliance (Crane)

Submit one copy of each permit/certificate attached to each Daily Production or Quality Control Report.

Machinery & Mechanized Equipment Certification Form

1.4 CONTRACTOR SAFETY SELF-EVALUATION CHECKLIST

Contracting Officer will provide a "Contractor Safety Self-Evaluation checklist" to the Contractor at the pre-construction conference. Complete the checklist monthly and submit with each request for payment voucher. An acceptable score of 90 or greater is required. Failure to submit the completed safety self-evaluation checklist or achieve a score of at least 90 may result in retention of up to 10 percent of the voucher. Additionally, provide a Monthly Exposure Report and attach to the monthly billing request. This report is a compilation of employee-hours worked each month for all site workers, both prime and subcontractor. Failure to submit the report may result in retention of up to 10 percent of the voucher. The Contracting Officer will submit a copy of the Contractor Safety Self-Evaluation and Monthly Exposure Report to the local safety and occupational health office.

1.5 REGULATORY REQUIREMENTS

In addition to the detailed requirements included in the provisions of this contract, comply with the most recent addition of USACE EM 385-1-1, and applicable federal and local ordinances, criteria, rules and regulations. Submit matters of interpretation of standards to the appropriate administrative agency for resolution before starting work. Where the requirements of this specification, applicable laws, criteria, ordinances, regulations, and referenced documents vary, the most stringent requirements govern.

1.6 SITE QUALIFICATIONS, DUTIES AND MEETINGS

1.6.1 Personnel Qualifications

1.6.1.1 Site Safety and Health Officer (SSHO)

The SSHO must meet the requirements of EM 385-1-1 section 1 and ensure that the requirements of 29 CFR 1926.16 are met for the project. Provide a Safety oversight team that includes a minimum of one (1) person at each project site to function as the Site Safety and Health Officer (SSHO). The SSHO or an equally-qualified Designated Representative/alternate shall be at the work site at all times to implement and administer the Contractor's safety program and government-accepted Accident Prevention Plan. The

SSHO's training, experience, and qualifications shall be as required by EM 385-1-1 paragraph 01.A.17, entitled SITE SAFETY AND HEALTH OFFICER (SSHO), and all associated sub-paragraphs.

A Competent Person shall be provided for all of the hazards identified in the Contractor's Safety and Health Program in accordance with the accepted Accident Prevention Plan, and shall be on-site at all times when the work that presents the hazards associated with their professional expertise is being performed. Provide the credentials of the Competent Persons(s) to the Contracting Officer for acceptance in consultation with the Safety Office.

Provide a Safety oversight team that includes a minimum of one (1) Competent Person at each jobsite for each facility to function as the Site Safety and Health Officer (SSHO). The SSHO shall be at the work site at all times, unless specified differently in the contract, to perform safety and occupational health management, surveillance, inspections, and safety enforcement for the Contractor. The SSHO must have the training, experience, and qualifications required by EM 385-1-1 paragraph 01.A.17 and all associated sub-paragraphs and be able to demonstrate the proficiency required.

The Project Superintendent or other Contractor personnel may act on behalf of the SSHO for a period of no more than thirty (30) days annually, provided that the individual meets the same competency level of the SSHOs, demonstrates the proficiency required, and is approved by the Contracting Officer in consultation with the NAVFAC MARIANAS Site Safety and Health Manager.

1.6.1.1.1 Contractor Quality Control (QC) Personnel:

The Contractor Quality Control (QC) person cannot be the SSHO on this project, although the QC has safety inspection responsibilities as part of the QC duties.

1.6.1.1.2 Additional Site Safety and Health Officer (SSHO) Requirements and Duties:

All SSHO shall have completed the “40 Hour Construction Safety Kazard Awareness Training Course for Contractors” which is periodically offered by the Guam Contractors Association Trades Academy (GCA Trades Academy) and other qualified trainers. The credentials of the SSHO will be approved by the Contracting Officer in consultation with the NAVFAC MARIANAS Site Safety and Health Manager.

1.6.1.1.3 40 Hour Construction Safety Hazard Awareness Training Course for Contractors

The training requirements for the SSHO must include the successful completion of the course entitled "40 Hour Construction Safety Hazard Awareness Training Course for Contractors". If the SSHO does not have a current certification, he/she shall obtain the course certification within sixty (60) calendar days from award.

1.6.1.1.4 Qualified Trainer Requirements for 40 Hour Construction Safety Hazard Awareness Training Course for Contractors and 16 hours of classroom training on the requirements of the latest version of the EM 385-1-1:

Completed the following courses:

a. OSHA 510, Occupational Safety and Health Standards for Construction
b. OSHA 500, Trainer Course in OSHA Standards for Construction
c. OSHA 3095, Electrical Standards
d. OSHA 7115, Lockout/Tagout
e. OSHA 3110, Fall Arrest Systems
f. OSHA 2264, Permit-Required Confined Space Entry
g. OSHA 3010, Excavation, Trenching and Soil Mechanics
h. Scaffolds in accordance with 29 CFR 1926.450, Subpart L
i. NAVFAC 40-hour Construction Safety Hazard Awareness Training

Responsibilities of Authorized Trainers:

a. Prepare class presentations that cover construction-related safety requirements and includes topics covered in the NAVFAC Construction Safety Hazard Awareness Course for Contractors.

b. Ensure that all attendees attend all sessions by using a class roster signed daily by each attendee. Maintain copies of the roster for at least five (5) years. This is a certification class and must be attended 100%. In cases of emergency where an attendee cannot make it to a session, the attendee can make it up in another class session for the same subject.

c. Update training course materials whenever an update of the EM 385-1-1 becomes available.

d. Provide a written exam of at least 50 questions. Students shall be required to answer 80% correctly to pass.\

Copies of test and student answers shall be retained for five (5) years and will be made available for inspection by the NAVFAC MARIANAS Site Safety and Health Manager upon request.

1.6.1.1.5 Requirements for all Contractor Jobsite Personnel Holding H-1B or H-2B Visas:

All Contractor jobsite workers holding an H-1B or H-2B visa shall complete a minimum 16 hours of classroom training on the requirements of the latest version of the U.S. Army Corps of Engineers Safety & Health Requirements Manual (EM 385-1-1) prior to their first day on the jobsite to include but not limited to the following topics: Sanitation; Medical and First Aid Requirements; Temporary Facilities; Personal Protective Equipment; Electrical; Hand and Power Tools; Material Handling and Storage; Motor Vehicles; Fall Protection; Work Platforms and Scaffoldings; Demolition; Safe Access, Ladders, Floor & Wall Openings, Stairs and Railing Systems; Excavations and Trenching; and Confined Spaces, prior to reporting to the jobsite.

Submit a list of workers who have completed the training to the Contracting Officer prior to them reporting to the jobsite. Update the list as additional workers are added. Maintain the updated list at the jobsite for review by the government’s designated authority. Include the qualifications of qualified trainer(s) that provided the training. Personnel who have taken the 40 Hour Construction Safety Hazard Awareness

Training Course for Contractors are not required to take the 16 hours of classroom training on the requirements of the latest version of the EM 385-1-1.

The 16 hours classroom training may be provided by the Guam Contractors Association Trades Academy (GCA Trades Academy) or other qualified trainers as outlined in the subpart titled "Qualified Trainer Requirements".

1.6.1.2 Competent Person for Confined Space Entry

Provide a "Competent Person" to supervise the entry into each confined space. That individual must meet the requirements and definition of Competent Person as contained in EM 385-1-1.

Since this work involves marine operations that handle combustible or hazardous materials, this person shall have the ability to understand and follow through on the air sampling, PPE, and instructions of a Marine Chemist, Coast Guard authorized persons, or Certified Industrial Hygienist. All confined space and enclosed space work shall comply with NFPA 306, OSHA 29 CFR 1915, Subpart B, "Confined and Enclosed Spaces and Other Dangerous Atmospheres in Shipyard Employment" or as applicable, 29 CFR 1910.147 for general industry.

1.6.1.3 Certified Safety Professional (CSP)

Provide a Certified Safety Professional (CSP) at the work site to perform safety and occupational health management, surveillance, inspections, and safety enforcement for the Contractor. The CSP shall be the safety and occupational health "competent person" as defined by USACE EM 385-1-1. The CSP shall have no other duties than safety and occupational health management, inspections, and/or industrial hygiene.

1.6.1.4 Associate Safety professional (ASP), Certified Safety Trained

Supervisor (STS) and/or Construction Health and Safety Technician (CHST) Provide an Associate Safety Professional (ASP)and/or Construction Health & Safety Technician (CHST) at the work site to perform safety management, surveillance, inspections, and safety enforcement for the Contractor. The ASP and/or CHST shall be the safety and occupational health "competent person" as defined by USACE EM 385-1-1. The ASP and/or CHST shall be at the work site at all times whenever work or testing is being performed and shall conduct and document daily safety inspections. The ASP and/or CHST shall have no other duties other than safety and occupational health management, inspections, and enforcement on this contract.

1.6.1.5 Crane Operators

Meet the crane operators requirements in USACE EM 385-1-1, Section 16 and Appendix I. In addition, for mobile cranes with Original Equipment Manufacturer (OEM) rated capacitates of 50,000 pounds or greater, designate crane operators as qualified by a source that qualifies crane operators (i.e., union, a government agency, or and organization that tests and qualifies crane operators). Provide proof of current qualification. In addition, the Contractor shall comply with Contractor Operated Crane Requirements included in the latest revision of document NAVFAC P-307

Section 1.7.2 "Contractor Operated Cranes," and Appendix P, Figure P-1 and with 29 CFR 1926, Subpart CC.

1.6.2 Personnel Duties

1.6.2.1 Site Safety and Health Officer (SSHO)

The SSHO shall:

a. Conduct daily safety and health inspections and maintain a written log which includes area/operation inspected, date of inspection, identified hazards, recommended corrective actions, estimated and actual dates of corrections. Attach safety inspection logs to the Contractors' daily production and/or quality control report.

b. Conduct mishap investigations and complete required reports. Maintain the OSHA Form 300 and Daily Production reports for prime and sub-contractors.

c. Maintain applicable safety reference material on the job site.

d. Attend the pre-construction conference, pre-work meetings including preparatory inspection meeting, and periodic in-progress meetings.

e. Implement and enforce accepted APPS and AHAs.

f. Maintain a safety and health deficiency tracking system that monitors outstanding deficiencies until resolution. Post a list of unresolved safety and health deficiencies on the safety bulletin board.

g. Ensure sub-contractor compliance with safety and health requirements.

h. Perform safety and occupational health management, surveillance, inspections, and safety enforcement for the project.

i. Perform as the safety and occupational health "competent person" as defined by USACE EM 385-1-1.

j. Be on-site at all times whenever work or testing is being performed.

k. Conduct and document safety inspections.

l. Maintain a list of hazardous chemicals on site and their material safety data sheets.

Failure to perform the above duties will result in dismissal of the superintendent, QC Manager, and/or SSHO, and a project work stoppage. The project work stoppage will remain in effect pending approval of a suitable replacement.

1.6.2.2 Certified Safety Professional (CSP) and/or Certified Construction Health & Safety Technician (CHST)

a. Perform safety and occupational health management, surveillance, inspections, and safety enforcement for the project.

b. Perform as the safety and occupational health "competent person" as defined by USACE EM 385-1-1.

c. Be on-site at all times whenever work or testing is being performed.

d. Conduct and document safety inspections.

e. Shall have no other duties other than safety and occupational health management, inspections, and enforcement on this contract.

If the CSP and/or CHST is appointed as the SSHO all duties of that position shall also be performed.

1.6.3 Meetings

1.6.3.1 Preconstruction Conference

a. Contractor representatives who have a responsibility or significant role in accident prevention on the project shall attend the preconstruction conference. This includes the project superintendent, site safety and health officer, quality control supervisor, or any other assigned safety and health professionals who participated in the development of the APP (including the Activity Hazard Analyses (AHAs) and special plans, program and procedures associated with it).

b. Discuss the details of the submitted APP to include incorporated plans, programs, procedures and a listing of anticipated AHAs that will be developed and implemented during the performance of the contract. This list of proposed AHAs will be reviewed at the conference and an agreement will be reached between the Contractor and the Contracting Officer's representative as to which phases will require an analysis. In addition, establish a schedule for the preparation, submittal, review, and acceptance of AHAs to preclude project delays.

c. Deficiencies in the submitted APP will be brought to the attention of the Contractor at the preconstruction conference, and the Contractor shall revise the plan to correct deficiencies and re-submit it for acceptance. Do not begin work until there is an accepted APP.

1.6.3.2 Safety Meetings

Conduct and document meetings as required by EM 385-1-1. Attach minutes showing contract title, signatures of attendees and a list of topics discussed to the Contractors' daily production and quality control report.

1.7 ACCIDENT PREVENTION PLAN (APP)

Use a qualified person to prepare the written site-specific APP. Prepare the APP in accordance with the format and requirements of USACE EM 385-1-1 and as supplemented herein. Cover all paragraph and subparagraph elements in USACE EM 385-1-1, Appendix A, "Minimum Basic Outline for Accident Prevention Plan". Specific requirements for some of the APP elements are described below. The APP shall be job-specific and address any unusual or unique aspects of the project or activity for which it is written. The APP shall interface with the Contractor's overall safety and health program. Include any portions of the Contractor's overall safety and health program referenced in the APP in the applicable APP element and made site-specific.

The Government considers the Prime Contractor to be the "controlling authority" for all work site safety and health of the subcontractors. Contractors are responsible for informing their subcontractors of the safety provisions under the terms of the contract and the penalties for noncompliance, coordinating the work to prevent one craft from interfering with or creating hazardous working conditions for other crafts, and inspecting subcontractor operations to ensure that accident prevention responsibilities are being carried out. The APP shall be signed by the person and firm (senior person) preparing the APP, the Contractor, the on-site superintendent, the designated site safety and health officer, the Contractor Quality control Manager, and any designated CSP and/or CIH.

Submit the APP to the Contracting Officer 15 calendar days prior to the date of the preconstruction conference for acceptance. Work cannot proceed without an accepted APP.

Once accepted by the Contracting Officer, the APP and attachments will be enforced as part of the contract. Disregarding the provisions of this contract or the accepted APP will be cause for stopping of work, at the discretion of the Contracting Officer, until the matter has been rectified.

Once work begins, changes to the accepted APP shall be made with the knowledge and concurrence of the Contracting Officer, project superintendent, SSHO and quality control manager. Should any severe hazard exposure, i.e. imminent danger, become evident, stop work in the area, secure the area, and develop a plan to remove the exposure and control the hazard. Notify the Contracting Officer within 24 hours of discovery. Eliminate/remove the hazard. In the interim, take all necessary action to restore and maintain safe working conditions in order to safeguard onsite personnel, visitors, the public (as defined by ASSE/SAFE A10.34,) and the environment.

Copies of the accepted plan will be maintained at the Contracting Officer’s office and at the job site. Continuously reviewed and amended the APP, as necessary, throughout the life of the contract. Incorporate unusual or high-hazard activities not identified in the original APP as they are discovered.

1.7.1 EM 385-1-1 Contents

In addition to the requirements outlines in Appendix A of USACE EM 385-1-1, the following is required:

a. Names and qualifications (resumes including education, training, experience and certifications) of all site safety and health personnel designated to perform work on this project to include the designated site safety and health officer and other competent and qualified personnel to be used such as CSPs, CIHs, STSs, CHSTs. Specify the duties of each position.

b. Qualifications of competent and of qualified persons. As a minimum, designate and submit qualifications of competent persons for each of the following major areas: excavation; scaffolding; fall protection; hazardous energy; confined space; health hazard recognition, evaluation and control of chemical, physical and biological agents; personal protective equipment and clothing to include selection, use and maintenance.

c. Confined Space Entry Plan. Develop a confined and/or enclosed space entry plan in accordance with USACE EM 385-1-1, applicable OSHA standards 29 CFR 1910, 29 CFR 1915, and 29 CFR 1926, OSHA Directive 2.100, and any other federal, state and local regulatory requirements identified in this contract. Identify the qualified person's name and qualifications, training, and experience. Delineate the qualified person's authority to direct work stoppage in the event of hazardous conditions. Include procedure for rescue by contractor personnel and the coordination with emergency responders. (If there is no confined space work, include a statement that no confined space work exists and none will be created.)

d. Crane Critical Lift Plan. Prepare and sign weight handling critical lift plans for lifts over 75 percent of the capacity of the crane or hoist (or lifts over 50 percent of the capacity of a barge mounted mobile crane's hoists) at any radius of lift; lifts involving more than one crane or hoist; lifts of personnel; and lifts involving non-routine rigging or operation, sensitive equipment, or unusual safety risks. Submit 15 calendar days prior to on-site work and include the requirements of USACE EM 385-1-1, paragraph 16.H. and the following:

(1) For lifts of personnel, demonstrate compliance with the requirements of 29 CFR 1926.550(g).

(2) For barge mounted mobile cranes, barge stability calculations identifying barge list and trim based on anticipated loading; and load charts based on calculated list and trim. The amount of list and trim shall be within the crane manufacturer's requirements.

e. Fall Protection and Prevention (FP&P) Program Documentation. The program documentation shall be site specific and address all fall hazards in the work place and during different phases of construction. Address how to protect and prevent workers from falling to lower levels when they are exposed to fall hazards above 6 feet. A qualified person for fall protection shall prepare and sign the program documentation. Include fall protection and prevention systems, equipment and methods employed for every phase of work, responsibilities, assisted rescue, self-rescue and evacuation procedures, training requirements, and monitoring methods. Revise the Fall Protection and Prevention Program documentation every six months for lengthy projects, reflecting any changes during the course of construction due to changes in personnel, equipment, systems or work habits. Keep and maintain the accepted Fall Protection and Prevention Program documentation at the job site for the duration of the project. Include the Fall Protection and Prevention Program documentation in the Accident Prevention Plan (APP).

The FP&P Plan shall include a Rescue and Evacuation Plan in accordance with USACE EM 385-1-1, Section 21.M. The plan shall include a detailed discussion of the following: methods of rescue; methods of self-rescue; equipment used; training requirement; specialized training for the rescuers; procedures for requesting rescue and medical assistance; and transportation routes to a medical facility. Include the Rescue and Evacuation Plan in the Fall Protection and Prevention (FP&P) Plan, and as part of the Accident Prevention Plan (APP).

f. Occupant Protection Plan.

g. Lead Compliance Plan.

h. Site Safety and Health Plan.

i. Site Demolition Plan.

j. Excavation Plan if excavation is required to perform work.

1.8 ACTIVITY HAZARD ANALYSIS (AHA)

The Activity Hazard Analysis (AHA) format shall be in accordance with USACE EM 385-1-1, Section 1. Submit the AHA for review at least 15 calendar days prior to the start of each phase. Format subsequent AHAs as amendments to the APP. The analysis should be used during daily inspections to ensure the implementation and effectiveness of the activity's safety and health controls.

The AHA list will be reviewed periodically (at least monthly) at the Contractor supervisory safety meeting and updated as necessary when procedures, scheduling, or hazards change.

Develop the activity hazard analyses using the project schedule as the basis for the activities performed. Any activities listed on the project schedule will require an AHA. The AHAs will be developed by the contractor, supplier or subcontractor and provided to the prime contractor for submittal to the Contracting Officer.

1.9 DISPLAY OF SAFETY INFORMATION

Within 1 calendar day after commencement of work, erect a safety bulletin board at the job site. Where size, duration, or logistics of project do not facilitate a bulletin board, an alternative method, acceptable to the Contracting Officer, that is accessible and includes all mandatory information for employee and visitor review, shall be deemed as meeting the requirement for a bulletin board. Include and maintain information on safety bulletin board as required by EM 385-1-1, section 01.A.06. Additional items required to be posted include:

a. Confined space entry permit.

b. Hot work permit.

1.10 SITE SAFETY REFERENCE MATERIALS

Maintain safety-related references applicable to the project, including those listed in the article "References." Maintain applicable equipment manufacturer's manuals.

1.11 EMERGENCY MEDICAL TREATMENT

Contractors will arrange for their own emergency medical treatment. Government has no responsibility to provide emergency medical treatment.

1.12 NOTIFICATION and REPORTS

1.12.1 Accident Notification

Notify the Contracting Officer as soon as practical, but not later than four hours, after any accident meeting the definition of Recordable Injuries or Illnesses or High Visibility Accidents, property damage equal to or greater than $2,000, or any weight handling equipment accident. Within notification include contractor name; contract title; type of contract; name of activity, installation or location where accident occurred; date and time of accident; names of personnel injured; extent of property damage, if any; extent of injury, if known, and brief description of accident (to include type of construction equipment used, PPE used, etc.). Preserve the conditions and evidence on the accident site until the Government investigation team arrives on-site and Government investigation is conducted.

1.12.2 Accident Reports

a. Conduct an accident investigation for recordable injuries and illnesses, for Medical Treatment defined in paragraph DEFINITIONS, property damage accidents resulting in at least $20,000 in damages, and near misses as defined in EM 385-1-1, to establish the root cause(s) of the accident. Complete the applicable NAVFAC Contractor Incident Reporting System (CIRS), and electronically submit via the NAVFAC Enterprise Safety Applications Management System (ESAMS). For Army projects, complete the applicable USACE Accident Report Form 3394, and provide the report to the Contracting Officer within 5 calendar day(s) of the accident. The Contracting Officer will provide copies of any required or special forms.

b. Near Misses: Complete the applicable documentation in NAVFAC Contractor Incident Reporting System (CIRS), and electronically submit via the NAVFAC Enterprise Safety Applications Management System (ESAMS).

c. Conduct an accident investigation for any weight handling equipment accident (including rigging gear accidents) to establish the root cause(s) of the accident, complete the WHE Accident Report (Crane and Rigging Gear) form and provide the report to the Contracting Officer within 30 calendar days of the accident. Do not proceed with crane operations until cause is determined and corrective actions have been implemented to the satisfaction of the contracting officer. The Contracting Officer will provide a blank copy of the accident report form.

1.12.3 Crane Reports

Submit crane inspection reports required in accordance with USACE EM 385-1-1, Appendix I and as specified herein with Daily Reports of Inspections.

1.12.4 Certificate of Compliance

Provide a Certificate of Compliance for each crane entering an activity under this contract (see Contracting Officer for a blank certificate). State within the certificate that the crane and rigging gear meet applicable OSHA regulations (with the Contractor citing which OSHA regulations are applicable, e.g., cranes used in construction, demolition,

or maintenance comply with 29 CFR 1926 and USACE EM 385-1-1 Section 16 and Appendix I. Certify on the Certificate of Compliance that the crane operator(s) is qualified and trained in the operation of the crane to be used. Also certify that all of its crane operators working on the DOD activity have been trained in the proper use of all safety devices (e.g., anti-two block devices). Post certifications on the crane.

1.12.5 Third Party Certification of Barge-Mounted Mobile Cranes

Certify barge-mounted mobile cranes in accordance with 29 CFR 1919 by an OSHA accredited person.

1.13 HOT WORK

Submit and obtain a written permit prior to performing "Hot Work" (welding, cutting, etc.) or operating other flame-producing/spark producing devices, from the Naval Base Guam and/or Andersen Air Force Fire Division. A permit is required from the Explosives Safety Office for work in and around where explosives are processed, stored, or handled. CONTRACTORS ARE REQUIRED TO MEET ALL CRITERIA BEFORE A PERMIT IS ISSUED. The Contractor will provide at least two (2) twenty (20) pound 4A:20 BC rated extinguishers for normal "Hot Work". All extinguishers shall be current inspection tagged, approved safety pin and tamper resistant seal. It is also mandatory to have a designated FIRE WATCH for any "Hot Work" done at this activity. The Fire Watch shall be trained in accordance with NFPA 51B and remain on-site for a minimum of 30 minutes after completion of the task or as specified on the hot work permit.

When starting work in the facility, require personnel to familiarize themselves with the location of the nearest fire alarm boxes and place in memory the emergency Fire Division phone number. ANY FIRE, NO MATTER HOW SMALL, SHALL BE REPORTED TO THE RESPONSIBLE FIRE DIVISION IMMEDIATELY.

1.14 RADIATION SAFETY REQUIREMENTS

License Certificates for radiation materials and equipment shall be submitted to the Contracting Officer and Radiation Safety Office (RSO) and Contracting Oversight Technician (COT) for all specialized and licensed material and equipment that could cause fatal harm to construction personnel or to the construction project.

Workers shall be protected from radiation exposure in accordance with 10 CFR 20. Standards for Protection Against Radiation

Loss of radioactive material shall be reported immediately to the Contracting Officer.

Actual exposure of the radiographic film or unshielding the source shall not be initiated until after 5 p.m. on weekdays.

In instances where radiography is scheduled near or adjacent to buildings or areas having limited access or one-way doors, no assumptions shall be made as to building occupancy. Where necessary, the Contracting Officer will direct the Contractor to conduct an actual building entry, search, and alert. Where removal of personnel from such a building cannot be accomplished and it is otherwise safe to proceed with the radiography, a fully instructed employee shall be positioned inside such building or area

to prevent exiting while external radiographic operations are in process. Transportation of Regulated Amounts of Radioactive Material will comply with 49 CFR, Subchapter C, Hazardous Material Regulations. Local Fire authorities and the site Radiation Safety officer (RSO) shall be notified of any Radioactive Material use.

Transmitter Requirements: The base policy concerning the use of transmitters such as radios, cell phones, etc., must be adhered to by all contractor personnel. They must also obey Emissions control (EMCON) restrictions.

1.15 FACILITY OCCUPANCY CLOSURE

Streets, walks, and other facilities occupied and used by the Government shall not be closed or obstructed without written permission from the Contracting Officer.

1.16 SEVERE STORM PLAN

In the event of a severe storm warning, the Contractor must:

a. Secure outside equipment and materials and place materials that could be damaged in protected areas.

b. Check surrounding area, including roof, for loose material, equipment, debris, and other objects that could be blown away or against existing facilities.

c. Ensure that temporary erosion controls are adequate.

1.19 CONFINED SPACE ENTRY REQUIREMENTS.

Contractors entering and working in confined spaces while performing general industry work are required to follow the requirements of OSHA 29 CFR 1926 and comply with the requirements in Section 34 of EM 385-1-1, OSHA 29 CFR 1910, and OSHA 29 CFR 1910.146. Contractors entering and working in confined spaces while performing shipyard industry work are required to follow the requirements of OSHA 29 CFR 1915 Subpart B.

PART 2 PRODUCTS

2.1 CONFINED SPACE SIGNAGE

Provide permanent signs integral to or securely attached to access covers for new permit-required confined spaces. Signs wording: "DANGER--PERMIT-REQUIRED CONFINED SPACE - DO NOT ENTER -" in bold letters a minimum of one inch in height and constructed to be clearly legible with all paint removed. The signal word "DANGER" shall be red and readable from 5 feet.

2.2 FALL PROTECTION ANCHORAGE

Leave in place fall protection anchorage, conforming to ASSE/SAFE Z359.1, installed under the supervision of a qualified person in fall protection, for continued customer use and so identified by signage stating the capacity of the anchorage (strength and number of persons who may be tied-off to it at any one time).

PART 3 EXECUTION

3.1 CONSTRUCTION AND OTHER WORK

Comply with USACE EM 385-1-1, NFPA 70, NFPA 70E, NFPA 241, the APP, the AHA, Federal and State OSHA regulations, and other related submittals and activity fire and safety regulations. The most stringent standard prevails. PPE is governed in all areas by the nature of the work the employee is performing. Use personal hearing protection at all times in designated noise hazardous areas or when performing noise hazardous tasks. Safety glasses must be carried/available on each person.

Mandatory PPE includes:

a. Hard Hat

b. Appropriate Safety Shoes

c. Reflective Vests

3.1.1 Hazardous Material Use

Each hazardous material must receive approval from the Contracting Office or their designated representative prior to being brought onto the job site or prior to any other use in connection with this contract. Allow a minimum of 10 working days for processing of the request for use of a hazardous material.

3.1.2 Hazardous Material Exclusions

Notwithstanding any other hazardous material used in this contract, radioactive materials or instruments capable of producing ionizing/non-ionizing radiation (with the exception of radioactive material and devices used in accordance with USACE EM 385-1-1 such as nuclear density meters for compaction testing and laboratory equipment with radioactive sources) as well as materials which contain asbestos, mercury or polychlorinated biphenyls, di-isocynates, lead-based paint are prohibited. The Contracting Officer, upon written request by the Contractor, may consider exceptions to the use of any of the above excluded materials. The Radiation Safety Officer (RSO) must be notified prior to excepted items of radioactive material and devices being brought on base.

3.1.3 Unforeseen Hazardous Material

The design should have identified materials such as PCB, lead paint, and friable and non-friable asbestos and other OSHA regulated chemicals (i.e. 29 CFR Part 1910.1000). If material, not indicated, that may be hazardous to human health upon disturbance during construction operations is encountered, stop that portion of work and notify the Contracting Officer immediately. Within 14 calendar days the Government will determine if the material is hazardous. If material is not hazardous or poses no danger, the Government will direct the Contractor to proceed without change. If material is hazardous and handling of the material is necessary to accomplish the work, the Government will issue a modification pursuant to "FAR 52.243-4, Changes" and "FAR 52.236-2, Differing Site Conditions."

3.2 PRE-OUTAGE COORDINATION MEETING

Apply for utility outages at least 15 days in advance. As a minimum, the request should include the location of the outage, utilities being affected, duration of outage and any necessary sketches. Special requirements for electrical outage requests are contained elsewhere in this specification section. Once approved, and prior to beginning work on the utility system requiring shut down, attend a pre-outage coordination meeting with the Contracting Officer, the Installation representative, Base Operating Support Contract and Public Utilities representative to review the scope of work and the lock-out/tag-out procedures for worker protection. No work will be performed on energized electrical circuits unless proof is provided that no other means exist.

3.3 CONTROL OF HAZARDOUS ENERGY (LOCKOUT/TAGOUT)

Contractor shall ensure that each employee is familiar with and complies with these procedures and USACE EM 385-1-1, Section 12, Control of Hazardous Energy.

3.4 FALL HAZARD PROTECTION AND PREVENTION PROGRAM

Establish a fall protection and prevention program, for the protection of all employees exposed to fall hazards. Within the program include company policy, identify responsibilities, education and training requirements, fall hazard identification, prevention and control measures, inspection, storage, care and maintenance of fall protection equipment and rescue and evacuation procedures in accordance with ASSE/SAFE Z359.1.

3.4.1 Training

Institute a fall protection training program. As part of the Fall Hazard Protection and Prevention Program, provide training for each employee who might be exposed to fall hazards. Provide training by a competent person for fall protection in accordance with USACE EM 385-1-1, Section 21.B.

3.4.2 Fall Protection Equipment and Systems

Enforce use of the fall protection equipment and systems designated for each specific work activity in the Fall Protection and Prevention Plan and/or AHA at all times when an employee is exposed to a fall hazard. Protect employees from fall hazards as specified in EM 385-1-1, Section 21. In addition to the required fall protection systems, safety skiff, personal floatation devices, life rings etc., are required when working above or next to water in accordance with USACE EM 385-1-1, Paragraphs 21.N through 21.N.04. Personal fall arrest systems are required when working from an articulating or extendible boom, swing stages, or suspended platform. In addition, personal fall arrest systems are required when operating other equipment such as scissor lifts if the work platform is capable of being positioned outside the wheelbase. The need for tying-off in such equipment is to prevent ejection of the employee from the equipment during raising, lowering, or travel. Fall protection must comply with 29 CFR 1926.500, Subpart M, USACE EM 385-1-1 and ASSE/SAFE A10.32.

3.4.2.1 Personal Fall Arrest Equipment

Personal fall arrest equipment, systems, subsystems, and components shall meet ASSE/SAFE Z359.1. Only a full-body harness with a shock-absorbing lanyard or self-retracting lanyard is an acceptable personal fall arrest body support device. Body belts may only be used as a positioning device system (for uses such as steel reinforcing assembly and in addition to an approved fall arrest system). Harnesses shall have a fall arrest attachment affixed to the body support (usually a Dorsal D-ring) and specifically designated for attachment to the rest of the system. Only locking snap hooks and carabiners shall be used. Webbing, straps, and ropes shall be made of synthetic fiber. The maximum free fall distance when using fall arrest equipment shall not exceed 6 feet. The total fall distance and any swinging of the worker (pendulum-like motion) that can occur during a fall shall always be taken into consideration when attaching a person to a fall arrest system.

3.4.3 Fall Protection for Roofing Work

Implement fall protection controls based on the type of roof being constructed and work being performed. Evaluate the roof area to be accessed for its structural integrity including weight-bearing capabilities for the projected loading.

a. Low Sloped Roofs:

(1) For work within 6 feet of an edge, on low-slope roofs, Protect personnel from falling by use of personal fall arrest systems, guardrails, or safety nets. A safety monitoring system is not adequate fall protection and is not authorized.

(2) For work greater than 6 feet from an edge, erect and install warning lines in accordance with 29 CFR 1926.500 and USACE EM 385-1-1.

b. Steep-Sloped Roofs: Work on steep-sloped roofs requires a personal fall arrest system, guardrails with toe-boards, or safety nets. This requirement also includes residential or housing type construction.

3.4.4 Existing Anchorage

Shall be certified (or re-certified) by a registered structural engineer for fall protection existing anchorages, to be used for attachment of personal fall arrest equipment in accordance with ASSE/SAFE Z359.1. Existing horizontal lifeline anchorages must be certified (or re-certified) by a registered structural engineer with experience in designing horizontal lifeline systems.

3.4.5 Horizontal Lifelines

Design, install, certify and use under the supervision of a qualified person horizontal lifelines for fall protection as part of a complete fall arrest system which maintains a safety factor of 2 (29 CFR 1926.500).

3.4.6 Guardrails and Safety Nets

Design, install and use guardrails and safety nets in accordance with EM 385-1-1 and 29 CFR 1926 Subpart M.

3.4.7 Rescue and Evacuation Procedures

When personal fall arrest systems are used, ensure that the mishap victim can self-rescue or can be rescued promptly should a fall occur. Prepare a Rescue and Evacuation Plan and include a detailed discussion of the following: methods of rescue; methods of self-rescue; equipment used; training requirement; specialized training for the rescuers; procedures for requesting rescue and medical assistance; and transportation routes to a medical facility. Include the Rescue and Evacuation Plan within the Activity Hazard Analysis (AHA) for the phase of work, in the Fall Protection and Prevention (FP&P) Plan, and the Accident Prevention Plan (APP).

3.5 CONTROLLED INDUSTRIAL AREA (CIA) REQUIREMENTS

All personnel who enter the Controlled Industrial Area (CIA) shall wear mandatory personal protective equipment (PPE) at all times and comply with PPE postings of shops both inside and outside the CIA. PPE is governed in all other areas by the nature of the work the employee is performing. They will also use personal hearing protection at all times in designated noise hazardous areas or when performing noise hazardous tasks. Mandatory PPE includes:

a. Hard Hat

b. Safety Glasses

c. Appropriate Safety Shoes

d. Reflective Vests

3.6 SCAFFOLDING

Provide employees with a safe means of access to the work area on the scaffold. Climbing of any scaffold braces or supports not specifically designed for access is prohibited. Access scaffold platforms greater than 20 feet maximum in height by use of a scaffold stair system. Do not use vertical ladders commonly provided by scaffold system manufacturers for accessing scaffold platforms greater than 20 feet maximum in height. The use of an adequate gate is required. Ensure that employees are qualified to perform scaffold erection and dismantling. Do not use scaffold without the capability of supporting at least four times the maximum intended load or without appropriate fall protection as delineated in the accepted fall protection and prevention plan. Stationary scaffolds must be attached to structural building components to safeguard against tipping forward or backward. Give special care to ensure scaffold systems are not overloaded. Side brackets used to extend scaffold platforms on self-supported scaffold systems for the storage of material is prohibited. The first tie-in shall be at the height equal to 4 times the width of the smallest dimension of the scaffold base. Place work platforms on mud sills. Scaffold or work platform erectors shall have fall protection during the erection and dismantling of scaffolding or work platforms that are more than six feet.

Delineate fall protection requirements when working above six feet or above dangerous operations in the Fall Protection and Prevention (FP&P) Plan and Activity Hazard Analysis (AHA) for the phase of work.

3.6.1 Stilts

The use of stilts for gaining additional height in construction, renovation, repair or maintenance work is prohibited.

3.7 EQUIPMENT

3.7.1 Material Handling Equipment

a. Material handling equipment such as forklifts shall not be modified with work platform attachments for supporting employees unless specifically delineated in the manufacturer's printed operating instructions.

b. The use of hooks on equipment for lifting of material must be in accordance with manufacturer's printed instructions. Additionally, when material handling equipment is used as a crane, it must meet NAVFAC P-307 requirements in Sections 1.7.2, "Contractor Operated Cranes," and 12, "Investigation and Reporting of Crane and Rigging Gear Accidents."

c. Operators of forklifts or power industrial trucks shall be licensed in accordance with OSHA.

3.7.2 Weight Handling Equipment

a. Equip cranes and derricks as specified in EM 385-1-1, section 16.

b. Notify the Contracting Officer 15 days in advance of any cranes entering the activity so that necessary quality assurance spot checks can be coordinated. Prior to cranes entering federal activities, a Crane Access Permit must be obtained from the Contracting Officer for NAVFAC Marianas projects. A copy of the permitting process will be provided at the Preconstruction Conference. Contractor's operator shall remain with the crane during the spot check.

c. Comply with the crane manufacturer's specifications and limitations for erection and operation of cranes and hoists used in support of the work. Perform erection under the supervision of a designated person (as defined in ASME B30.5). Perform all testing in accordance with the manufacturer's recommended procedures.

d. Comply with ASME B30.5 for mobile and locomotive cranes, ASME B30.22 for articulating boom cranes, ASME B30.3 for construction tower cranes, and ASME B30.8 for floating cranes and floating derricks.

e. Under no circumstance shall a Contractor make a lift at or above 90 percent of the cranes rated capacity in any configuration.

f. When operating in the vicinity of overhead transmission lines, operators and riggers shall be alert to this special hazard and follow the requirements of USACE EM 385-1-1 Section 11 and ASME B30.5 or ASME B30.22 as applicable.

g. Do not crane suspended personnel work platforms (baskets) unless the Contractor proves that using any other access to the work location would provide a greater hazard to the workers or is impossible. Do not lift personnel with a line hoist or friction crane.

h. Inspect, maintain, and recharge portable fire extinguishers as specified in NFPA 10, Standard for Portable Fire Extinguishers.

i. All employees must keep clear of loads about to be lifted and of suspended loads.

j. Use cribbing when performing lifts on outriggers.

k. The crane hook/block must be positioned directly over the load. Side loading of the crane is prohibited.

l. A physical barricade must be positioned to prevent personnel from entering the counterweight swing (tail swing) area of the crane.

m. Certification records which include the date of inspection, signature of the person performing the inspection, and the serial number or other identifier of the crane that was inspected shall always be available for review by Contracting Officer personnel.

n. Written reports listing the load test procedures used along with any repairs or alterations performed on the crane shall be available for review by Contracting Officer personnel.

o. Certify that all crane operators have been trained in proper use of all safety devices (e.g. anti-two block devices).

p. Take steps to ensure that wind speed does not contribute to loss of control of the load during lifting operations. Prior to conducting lifting operations set a maximum wind speed at which a crane can be safely operated based on the equipment being used, the load being lifted, experience of operators and riggers, and hazards on the work site. This maximum wind speed determination shall be included as part of the activity hazard analysis plan for that operation.

q. Crane Critical Lift Plan: Prepare and sign weight handling critical lift plans for lifts over 75 percent of the capacity of the crane or hoist (or lifts over 50 percent of the capacity of a barge mounted mobile crane's hoists) at any radius of lift; lifts involving more than one crane or hoist; lifts of personnel; and lifts involving non-routine rigging or operation, sensitive equipment, or unusual safety risks. The plan shall be submitted 15 calendar days prior to on-site work and include the requirements of USACE EM 385-1-1, paragraph 16.C.18. and the following:

   (1) For lifts of personnel, the plan shall demonstrate compliance with the requirements of 29 CFR 1926.550(g).

r. Certificate of Compliance: The Contractor shall provide a Certificate of Compliance for each crane entering an activity under this contract (see Contracting Officer for a blank certificate). Certificate shall state that the crane and rigging gear meet applicable OSHA regulations (with the Contractor citing which OSHA regulations are applicable, e.g.,

cranes used in construction, demolition, or maintenance shall comply with 29 CFR 1926 and USACE EM 385-1-1 section 16 and Appendix H. Certify on the Certificate of Compliance that the crane operator(s) is qualified and trained in the operation of the crane to be used. The Contractor shall also certify that all of its crane operators working on the DOD activity have been trained in the proper use of all safety devices (e.g., anti-two block devices). These certifications shall be posted on the crane.

s. Notify the Contracting Officer 15 days in advance of any cranes entering the activity so that necessary quality assurance spot checks can be coordinated. Prior to cranes entering federal activities, a Crane Access Permit must be obtained from the Contracting Officer. A copy of the permitting process will be provided at the Preconstruction Conference. Contractor's operator shall remain with the crane during the spot check.

3.7.3 Equipment and Mechanized Equipment

a. Proof of qualifications for operator shall be kept on the project site for review.

b. Manufacture specifications or owner's manual for the equipment shall be on-site and reviewed for additional safety precautions or requirements that are sometimes not identified by OSHA or USACE EM 385-1-1. Incorporate such additional safety precautions or requirements into the AHAs.

c. For NAVFAC Marianas projects, submit a Machinery & Mechanized Equipment Certification Form for acceptance by the Contracting Officer prior to being placed into use. A copy of the certification form will be provided during the Pre-construction Conference.

3.7.4 USE OF EXPLOSIVES

Explosives shall not be used or brought to the project site without prior written approval from the Contracting Officer. Such approval shall not relieve the Contractor of responsibility for injury to persons or for damage to property due to blasting operations.

Storage of explosives, when permitted on Government property, shall be only where directed and in approved storage facilities. These facilities shall be kept locked at all times except for inspection, delivery, and withdrawal of explosives.

3.8 EXCAVATIONS

Soil classification must be performed by a competent person in accordance with 29 CFR 1926 and EM 385-1-1.

3.8.1 Utility Locations

All underground utilities in the work area must be positively identified by a third party, independent, private utility locating company in addition to any station locating service and coordinated with the station utility department.

3.8.2 Utility Location Verification

Physically verify underground utility locations, including utility depth, by hand digging using wood or fiberglass handled tools when any adjacent construction work is expected to come within three feet of the underground system.

3.8.3 Utilities Within and Under Concrete, Bituminous Asphalt, and Other Impervious Surfaces

Utilities located within and under concrete slabs or pier structures, bridges, parking areas, and the like, are extremely difficult to identify. Whenever contract work involves chipping, saw cutting, or core drilling through concrete, bituminous asphalt or other impervious surfaces, the existing utility location must be coordinated with station utility departments in addition to location and depth verification by a third party, independent, private locating company. The third party, independent, private locating company shall locate utility depth by use of Ground Penetrating Radar (GPR), X-ray, bore scope, or ultrasound prior to the start of demolition and construction. Outages to isolate utility systems must be used in circumstances where utilities are unable to be positively identified. The use of historical drawings does not alleviate the contractor from meeting this requirement.

3.9 ELECTRICAL

3.9.1 Conduct of Electrical Work

Underground electrical spaces must be certified safe for entry before entering to conduct work. Cables that will be cut must be positively identified and de-energized prior to performing each cut. Positive cable identification must be made prior to submitting any outage request for electrical systems. Arrangements are to be coordinated with the Contracting Officer and Station Utilities for identification. The Contracting Officer will not accept an outage request until the Contractor satisfactorily documents that the circuits have been clearly identified. Perform all high voltage cable cutting remotely using hydraulic cutting tool. When racking in or live switching of circuit breakers, no additional person other than the switch operator will be allowed in the space during the actual operation. Plan so that work near energized parts is minimized to the fullest extent possible. Use of electrical outages clear of any energized electrical sources is the preferred method. When working in energized substations, only qualified electrical workers will be permitted to enter. When work requires Contractor to work near energized circuits as defined by the NFPA 70, high voltage personnel must use personal protective equipment that includes, as a minimum, electrical hard hat, safety shoes, insulating gloves with leather protective sleeves, fire retarding shirts, coveralls, face shields, and safety glasses. In addition, provide electrical arc flash protection for personnel as required by NFPA 70E. Insulating blankets, hearing protection, and switching suits may also be required, depending on the specific job and as delineated in the Contractor's AHA.

3.9.2 Portable Extension Cords

Size portable extension cords in accordance with manufacturer ratings for the tool to be powered and protected from damage. Immediately remove from

service all damaged extension cords. Portable extension cords shall meet the requirements of EM 385-1-1, NFPA 70E and OSHA electrical standards.

3.10 WORK IN CONFINED SPACES

Comply with the requirements in Section 34 of USACE EM 385-1-1, OSHA 29 CFR 1910, OSHA 29 CFR 1910.146, OSHA Directive CPL 2.100 and OSHA 29 CFR 1926. Any potential for a hazard in the confined space requires a permit system to be used.

a. Entry Procedures. Prohibit entry into a confined space by personnel for any purpose, including hot work, until the qualified person has conducted appropriate tests to ensure the confined or enclosed space is safe for the work intended and that all potential hazards are controlled or eliminated and documented. (See Section 34 of USACE EM 385-1-1 for entry procedures.) All hazards pertaining to the space shall be reviewed with each employee during review of the AHA.

b. Forced air ventilation is required for all confined space entry operations and the minimum air exchange requirements must be maintained to ensure exposure to any hazardous atmosphere is kept below its' action level.

c. Sewer wet wells require continuous atmosphere monitoring with audible alarm for toxic gas detection.

-- End of Section --

SECTION 01 35 40.00 20

ENVIRONMENTAL MANAGEMENT
02/10

PART 1 GENERAL

1.1 REFERENCES

The publications listed below form a part of this specification to the extent referenced. The publications are referred to within the text by the basic designation only.

AMERICAN NATIONAL STANDARDS INSTITUTE (ANSI)

ANSI Z400.1/Z129.1	(2004) Hazardous Industrial Chemicals - Material Safety Data Sheets - Preparation

ASTM INTERNATIONAL (ASTM)

ASTM D4840	(1999; R 2010) Sampling Chain-Of-Custody Procedures
ASTM D5663	(1997; R 2003) Validating Recycled Content in Packaging Paper and Paperboard
ASTM E1991	(2005) Environmental Life Cycle Assessment of Building Materials/Products
ASTM E2114	(2008) Standard Terminology for Sustainability Relative to the Performance of Buildings

INTERNATIONAL ORGANIZATION FOR STANDARDIZATION (ISO)

ISO 14040	(2006) Environmental Management - Life Cycle Assessment - Principles and Framework

NATIONAL INSTITUTE OF STANDARDS AND TECHNOLOGY (NIST)

NIST BEES 4.0	(2007) Building for Environmental and Economic Sustainability

U.S. DEPARTMENT OF AGRICULTURE (USDA)

Biomass R&D Act	(2000) Biomass Research and Development Act
U.S. Farm Bill	(2002) U.S. Farm Bill of May 2002

U.S. ENVIRONMENTAL PROTECTION AGENCY (EPA)

NPDES	(1972; R 2005) National Pollutant Discharge Elimination System

U.S. GREEN BUILDING COUNCIL (USGBC)

LEED	(2002; R 2005) Leadership in Energy and Environmental Design(tm) Green Building Rating System for New Construction (LEED-NC)

U.S. NATIONAL ARCHIVES AND RECORDS ADMINISTRATION (NARA)

40 CFR	Protection of Environment
40 CFR 261	Identification and Listing of Hazardous Waste

1.2 DEFINITIONS

Definitions pertaining to sustainable development are as defined in ASTM E2114 and as specified.

a. "Biobased content" is calculated as the weight of the biobased material divided by the total weight of the product, and is expressed as a percentage by weight.

b. "Biobased materials" include fuels, chemicals, building materials, or electric power or heat produced from biomass as defined by the Biomass R&D Act. Minimum biobased content shall be as defined in the U.S. Farm Bill.

c. "Chain-of-custody" is a process whereby a product or material is maintained under the physical possession or control during its entire life cycle.

d. "Pollution and environmental damage" is caused by the presence of chemical, physical, or biological elements or agents. Human health or welfare is adversely affected; ecological balances are unfavorably altered; the utility of the environment for aesthetic, cultural, or historical purposes degrades.

1.3 PRECONSTRUCTION MEETING

After award of Contract and prior to commencement of the work, the Contractor shall schedule and conduct a meeting with the Contracting Officer to discuss the proposed Environmental Protection Plan and to develop a mutual understanding relative to the details of environmental protection. The requirements for this meeting may be fulfilled during the coordination and mutual understanding meeting as specified in Section 01 45 00.10 20 NAVFAC QUALITY CONTROL.

1.4 SUBMITTALS

Government approval is required for submittals with a "G" designation; submittals not having a "G" designation are for Contractor Quality Control approval. When used, a designation following the "G" designation identifies the office that will review the submittal for the Government. The following shall be submitted in accordance with Section 01 33 00 SUBMITTAL PROCEDURES:

SD-01 Preconstruction Submittals

Environmental Protection Plan

Instructor Qualifications

Submit reference data to demonstrate instructors' individual and firm's capabilities and experience.

SD-03 Product Data

Life Cycle Assessments

Packaging; (LEED)

Submit documentation indicating percentage of post-industrial and post-consumer recycled content per unit of product. Indicate relative dollar value of recycled content products to total dollar value of products included in project.

SD-06 Test Reports

Field Quality Control Reports

SD-07 Certificates

Environmental Regulatory Requirements

For Government's records, submit copies of permits, licenses, certifications, inspection reports, releases, jurisdictional settlements, notices, receipts for fee payments, judgments, correspondence, records, and similar documents, established for compliance with environmental regulations bearing on performance of the work.

SD-08 Manufacturer's Instructions

Material Safety Data Sheets

SD-11 Closeout Submittals

Protection of Natural Resources

1.5 CONTRACTOR'S ENVIRONMENTAL MANAGER

Designate an on-site Environmental Manager responsible for overseeing the environmental goals for the project and implementing procedures for environmental protection.

1.5.1 Duties

The Environmental Manager shall be responsible for the following:

a. Compliance with applicable federal, state, and local environmental regulations, including maintaining required documentation.

b. Implementation of the Waste Management Plan.

c. Implementation of the Indoor Air Quality (IAQ) Management Plan.

d. Implementation of the Environmental Protection Plan.

e. Environmental training for Contractor personnel in accordance with their position requirements.

f. Monitoring and documentation of environmental procedures.

1.5.2 Qualifications

Minimum 5 years construction experience on projects of similar size and scope; minimum 2 years experience with environmental procedures similar to those of this project; familiarity with Environmental Management Systems (EMSs); familiarity with environmental regulations applicable to construction operations.

1.6 ENVIRONMENTAL REGULATORY REQUIREMENTS

The Contractor shall be responsible for knowing federal, state, and local regulatory requirements pertaining to legal disposal of all construction and demolition waste materials. Comply with all applicable regulations and maintain records of permits, licenses, certificates, and other environmental regulatory requirement correspondences.

1.7 ENVIRONMENTAL REQUIREMENTS FOR PRODUCTS

1.7.1 Material Safety Data Sheets (MSDS)

Submit an MSDS for each product specified in other sections or required by OSHA to have an MSDS. MSDS shall be prepared within the previous five years. Include information for MSDS Sections 1 through 16 in accordance with ANSI Z400.1/Z129.1 and as follows:

a. Section 11: Include data used to determine the hazards cited in Section 3. Identify acute data, carcinogenicity, reproductive effects, and target organ effects. [Provide written description of the process used in evaluating chemical hazards relative to preparation of the MSDS.]

b. Section 12: Include data regarding environmental impacts during raw materials acquisition, manufacture, and use. Include data regarding environmental impacts in the event of an accidental release.

c. Section 13: Include data regarding the proper disposal of the chemical. Include information regarding recycling and reuse. Indicate whether or not the product is considered to be "hazardous waste" according to 40 CFR 261.

d. Section 14: Identify hazard class for shipping.

e. Section 15: Identify federal, state, and local regulations applicable to the material.

f. Section 16: Include additional information relative to recycled content, biobased content, and other information regarding environmental and health impacts. Identify the date MSDS was prepared.

1.7.2 Life Cycle Assessments (LCAs)

For the following products, submit LCA data developed in accordance with ASTM E1991 or ISO 14040;and where BEES data exists, submit NIST BEES 4.0

analysis using 50 percent Environmental Performance Weighting and the EPA Scientific Advisory Board Environmental Impact Category Weights.

a. Joint Sealers

1.8 ENVIRONMENTAL PROTECTION PLAN

Prepare and submit an Environmental Protection Plan not less than 10 days before the preconstruction meeting. At a minimum, address the following elements in accordance with this section:

a. Identification and contact information for Environmental Manager.

b. General site information, including preconstruction description and photographs.

c. Summary of training program.

d. Procedures to address water resources.

e. Procedures to address land resources.

f. Procedures to address air resources.

g. Procedures to address fish and wildlife resources.

h. Monitoring and quality control procedures.

Revise and resubmit Plan as required by the Contracting Officer. Approval of Contractor's Plan will not relieve the Contractor of responsibility for compliance with applicable environmental regulations.

1.9 ENVIRONMENTAL DEMONSTRATION AND TRAINING

Contractor shall provide environmental training for workers performing work on the project site.

1.9.1 Instructor Qualifications

Training shall be given by a firm or individual experienced in providing training or education similar in content and extent to that indicated for this project.

1.9.2 Coordination

Coordinate instruction schedule with Government operations. Adjust schedule as required to minimize disruption of Government operations. Coordinate instruction with demonstration and training of general building systems.

1.9.3 Training Program

Develop a training program for all site workers that include the following topics:

a. Overview of environmental and sustainability issues related to the building industry.

b. Overview of environmental and sustainability issues related to the project.

c. Compliance with applicable federal, state, and local environmental regulations.

d. Review of site specific procedures and management plans implemented during construction, including the Waste Management Plan, Indoor Air Quality (IAQ) Management Plan, Environmental Protection Plan, and procedures for noise and acoustics management.

1.9.3.1 Scheduling

Provide instruction at mutually agreeable times.

1.9.3.2 Training Modules

Develop a learning objective and teaching outline for each topic in the Training Program. Include a description of specific skills and knowledge that each participant is expected to acquire. Instructors shall be well-versed in the particular topics that they are presenting.

1.9.3.3 Evaluation

At the conclusion of each training module, assess and document each participant's understanding of the module by use of [an oral][a written][a demonstration]performance-based test.

PART 2 PRODUCTS

2.1 ENVIRONMENTALLY PREFERABLE PRODUCTS

Consider raw materials acquisition, production, manufacturing, packaging, distribution, reuse, operation, maintenance, and disposal of products, and provide products and materials with the least effect on the environment, determined by LCA analysis, released toxins, and other methods.

2.1.1 Prohibited Materials

The use of the following materials is prohibited:

a. Products containing asbestos.

b. Products containing urea formaldehyde.

c. Products containing polychlorinated biphenyls.

d. Products containing chlorinated fluorocarbons.

e. Solder or flux containing more than 0.2 percent lead and domestic water pipe or pipe fittings containing more than 8 percent lead.

f. Paint containing more than 0.06 percent lead.

2.1.2 Packaging

Where Contractor has the option to provide one of the listed products or equal, preference shall be given to products with minimal packaging and easily recyclable packaging, and to manufacturers with policies that take back product packaging.

2.1.2.1 Industrial Paperboard

Minimum 45 percent post-consumer recycled content in accordance with ASTM D5663.

2.1.2.2 Carrier Board

Minimum 10 percent recycled content with a minimum of 10 percent post-consumer recycled content in accordance with ASTM D5663.

2.1.2.3 Brown Papers

Minimum 5 percent recycled content with a minimum of 5 percent post-consumer recycled content in accordance with ASTM D5663.

2.1.3 Substitutions

Notify the Contracting Officer when Contractor is aware of materials, equipment, or products that meet the aesthetic and programmatic intent of Contract Documents, but which are more environmentally responsible than materials, equipment, or products specified or indicated in the Contract Documents. Submit the following for initial review by the Contracting Officer:

a. Product data including manufacturer's name, address, and phone number.

b. Description of environmental advantages of proposed substitution over specified product.

PART 3 EXECUTION

3.1 PROTECTION OF NATURAL RESOURCES

Comply with applicable regulations and these specifications. Preserve the natural resources within the project boundaries and outside the limits of permanent work performed under this Contract in their existing condition or restore to an equivalent or improved condition as approved by the Contracting Officer. Where violation of environmental procedures requirements will irreversibly damage the site, documentation of progress at intervals shall be required.

3.1.1 General Disturbance

Confine demolition and construction activities to work area limits indicated on the Drawings or maximum 40 feet beyond the building perimeter, 5 feet beyond solid paving, and 25 feet beyond pervious paving. Remove debris, rubbish, and other waste materials resulting from demolition and construction operations from site. Transport materials with appropriate vehicles and dispose of them off site to areas that are approved for

disposal by governing authorities having jurisdiction. Avoid spillage by covering and securing loads when hauling on or adjacent to public streets or highways. Remove spillage and sweep, wash, or otherwise clean project site, streets, or highways. Burning is prohibited.

3.1.2 Water Resources

Comply with requirements of the NPDES and the applicable State Pollutant Discharge Elimination System (SPDES). Prevent oily or other hazardous substances from entering the ground, drainage areas, or local bodies of water. Store and service construction equipment at areas designated for collection of oil wastes. Prevent ponding of stagnant water conducive to mosquito breeding habitat. Prevent run-off from site during demolition and construction operations. Equipment will not be permitted to ford live streams.

3.1.3 Land Resources

Prior to start of work, identify land resources to be preserved within the work area. Do not remove, cut, deface, injure, or destroy land resources including trees, shrubs, vines, grasses, topsoil, and landforms without permission from the Contracting Officer.

3.1.4 Air Resources

Comply with Indoor Air Quality (IAQ) Management Plan and as follows:

a. Prevent creation of dust, air pollution, and odors.

b. Sequence construction to avoid unnecessary disturbance to site.

c. Store volatile liquids, including fuels and solvents, in closed containers. Do not store with materials that have a high capacity to adsorb VOC emissions or in occupied spaces.

3.1.5 Fish and Wildlife Resources

Manage and control construction activities to minimize interference with and damage to fish and wildlife. Do not disturb fish and wildlife. Do not alter water flows or otherwise significantly disturb the native habitat related to the project and critical to the survival of fish and wildlife, except as indicated or specified.

3.2 FIELD QUALITY CONTROL

Comply with requirements of agencies having jurisdiction and as specified herein. Provide field practices, shipping, and handling of samples in accordance with ASTM D4840. Provide Field Quality Control Reports in accordance with approved Environmental Protection Plan.

-- End of Section --

SECTION 01 42 00

SOURCES FOR REFERENCE PUBLICATIONS
08/10

PART 1 GENERAL

1.1 REFERENCES

Various publications are referenced in other sections of the specifications to establish requirements for the work. These references are identified in each section by document number, date and title. The document number used in the citation is the number assigned by the standards producing organization (e.g. ASTM B564 Standard Specification for Nickel Alloy Forgings). However, when the standards producing organization has not assigned a number to a document, an identifying number has been assigned for reference purposes.

1.2 ORDERING INFORMATION

The addresses of the standards publishing organizations whose documents are referenced in other sections of these specifications are listed below, and if the source of the publications is different from the address of the sponsoring organization, that information is also provided. Documents listed in the specifications with numbers which were not assigned by the standards producing organization should be ordered from the source by title rather than by number.

AMERICAN CONCRETE INSTITUTE INTERNATIONAL (ACI)
38800 Country Club Drive
Farmington Hills, MI 48331
Ph: 248-848-3700
Fax: 248-848-3701
E-mail: bkstore@concrete.org
Internet: http://www.concrete.org

AMERICAN ARCHITECTURAL MANUFACTURERS ASSOCIATION (AAMA)
1827 Walden Office Square
Suite 550
Schaumburg, IL 60173-5774
Ph: 847-303-5664
Fax: 847-303-5774
E-mail: webmaster@aamanet.org
Internet: http://www.aamanet.org

AMERICAN LADDER INSTITUTE (ALI/LADDER)
330 North Wabash Avenue, Suite 2000
Chicago, IL 60611
Tel: 202-367-1217
E-mail: info@americanladderinstitute.org
Internet: http://www.americanladderinstitute.org

AMERICAN NATIONAL STANDARDS INSTITUTE (ANSI)
1819 L Street, NW,11th Floor
Washington, DC 20036
Ph: 202-293-8020
Fax: 202-293-9287
E-mail: info@ansi.org
Internet: http://www.ansi.org/

AMERICAN SOCIETY FOR NONDESTRUCTIVE TESTING (ASNT)
1711 Arlingate Lane
P.O. Box 28518
Columbus, OH 43228-0518
Ph: 800-222-2768; 614-274-6003
Fax: 614-274-6899
E-mail: webmaster@asnt.org
Internet: http://www.asnt.org

AMERICAN SOCIETY FOR QUALITY (ASQ)
600 North Plankinton Avenue
Milwaukee, WI 53203
-or-
P.O. Box 3005
Milwaukee, WI 53201-3005
Ph: 800-935-2231; 414-272-8575
Fax: 414-272-1734
E-mail: help@asq.org
Internet: http://www.asq.org

AMERICAN SOCIETY OF SAFETY ENGINEERS (ASSE/SAFE)
1800 East Oakton Street
Des Plaines, IL 60018-2187
Ph: 847-699-2929
Fax: 847-768-3434
E-mail: customerservice@asse.org
Internet: http://www.asse.org

ASME INTERNATIONAL (ASME)
Three Park Avenue, M/S 10E
New York, NY 10016-5990
Ph: 800-854-7179 or 800-843-2763
Fax: 212-591-7674
E-mail: infocentral@asme.org
Internet: http://www.asme.org

ASTM INTERNATIONAL (ASTM)
100 Barr Harbor Drive, P.O. Box C700
West Conshohocken, PA 19428-2959
Ph: 610-832-9585
Fax: 610-832-9555
E-mail: service@astm.org
Internet: http://www.astm.org

CALIFORNIA ENERGY COMMISSION (CEC)
Media and Public Communications Office
1516 Ninth Street, MS-29
Sacramento, CA 95814-5512
Ph: 916-654-4287
Internet: http://www.energy.ca.gov/

CONSUMER PRODUCT SAFETY COMMISSION (CPSC)
4330 East-West Highway
Bethesda, MD 20814-4408
Ph: 301-504-7923
Fax: 301-504-0124 or 301-504-0025
E-mail: info@cpsc.gov
Internet: http://www.cpsc.gov

ENERGY INSTITUTE (EI)
Publications Team
Energy Institute
61 New Cavendish Street
London
W1G 7AR, UK
Ph: +44 (0)20 7467 7100
Fax: +44 (0)20 7255 1472
Internet: http://www.energyinstpubs.org.uk/cgi-bin/open.cgi?page=index

EXPANSION JOINT MANUFACTURERS ASSOCIATION (EJMA)
25 North Broadway
Tarrytown, NY 10591
Ph: 914-332-0040
Fax: 914-332-1541
E-mail: inquiries@ejma.org
Internet: http://www.ejma.org

FLUID CONTROLS INSTITUTE (FCI)
3916 Ranchero Drive
Ann Arbor, MI 48108
Ph: 734-780-8000
Fax: 734-780-2046
E-mail: fci@fluidcontrolsinstitute.org
Internet: www.fluidcontrolsinstitute.org

FLUID SEALING ASSOCIATION (FSA)
994 Old Eagle School Rd. #1019
Wayne, PA 19087
Ph: 610-971-4850
E-mail: info@fluidsealing.com
Internet: www.fluidsealing.com

GREEN BUILDING INITIATIVE (GBI)
2104 SE Morrison
Portland, Oregon 97214
Ph: 877-424-4241
Fax: 503.961.8991
Email: info@thegbi.org
Internet: http://www.thegbi.org/gbi/

INSTITUTE OF INSPECTION, CLEANING, AND RESTORATION CERTIFICATION (IICRC)
IICRC Administrative Office
2715 E Mill Plain Blvd.
Vancouver, WA 98661
Ph: 360-693-5675
Fax: 360-693-4858
Internet: http://www.iicrc.org/home

INTERNATIONAL SAFETY EQUIPMENT ASSOCIATION (ISEA)
1901 North Moore Street
Arlington, VA 22209-1762
Ph: 703-525-1695
Fax: 703-528-2148
E-mail: isea@safety equipment.org
Internet: http://www.safetyequipment.org/

INSTITUTE OF CLEAN AIR COMPANIES (ICAC)
2025 M Street NW, Suite 800
Washington, DC 20036
Ph: 202-367-1114
Fax: 202-367-2114
E-mail: icacinfo@icac.com
Internet: http://www.icac.com

INSTITUTE OF ENVIRONMENTAL SCIENCES AND TECHNOLOGY (IEST)
2340 South Arlington Heights Rd. Suite 620
Arlington Heights, IL 60005-4516
Ph: 847-981-0100
Fax: 847-981-4130
E-mail: iest@iest.org
Internet: http://www.iest.org

INTERNATIONAL CODE COUNCIL (ICC)
5360 Workman Mill Road
Whittier, CA 90601
Ph: 562-699-0541
Fax: 562-699-8031
E-mail: webmaster@iccsafe.org
Internet: www.iccsafe.org

INTERNATIONAL CONCRETE REPAIR INSTITUTE (ICRI)
3166 South River Road, Suite 132
Des Plaines, IL 60018
Ph: 847-827-0830
Fax: 847-827-0832
Internet: http://www.icri.org

MASTER PAINTERS INSTITUTE (MPI)
2800 Engleton Avenue
Burnaby, BC CANADA V5C 6G7
Ph: 1-888-674-8937
Fax: 1-888-211-8708
E-mail: info@paintinfo.com,jody@mpi.net,bgl@mpi.net
Internet: http://www.paintinfo.com/mpi

MATERIAL HANDLING INDUSTRY OF AMERICA INC (MHIA)
8720 Red Oak Blvd., Suite 201
Charlotte, NC 28717-3992
Ph: 704-676-1190
Fax: 704-676-1199
Internet: http://www.mhia.org

NATIONAL CONCRETE MASONRY ASSOCIATION (NCMA)
13750 Sunrise Valley Drive
Herndon, VA 20171-4662
Ph: 703-713-1900
Fax: 703-713-1910
E-mail: mterrell@ncma.org (Mary Arntson)
Internet: http://www.ncma.org/Pages/default.aspx

NATIONAL ENVIRONMENTAL BALANCING BUREAU (NEBB)
8575 Grovemont Circle
Gaithersburg, MD 20877
Ph: 301-977-3698
Fax: 301-977-9589
E-Mail: elana@nebb.org
Internet: http://www.nebb.org

NATIONAL FIRE PROTECTION ASSOCIATION (NFPA)
1 Batterymarch Park
Quincy, MA 02169-7471
Ph: 617-770-3000 or 800-344-3555
Fax: 617-770-0700
E-mail: webmaster@nfpa.org
Internet: http://www.nfpa.org

NATIONAL INSTITUTE FOR CERTIFICATION IN ENGINEERING TECHNOLOGIES (NICET)
1420 King Street
Alexandria, VA 22314-2794
Ph: 888-476-4238 (1-888 IS-NICET)
E-mail: tech@nicet.org
Internet: http://www.nicet.org

NATIONAL INSTITUTE FOR OCCUPATIONAL SAFETY AND HEALTH (NIOSH)
Mail Stop C-34
4676 Columbia Parkway
Cincinnati, OH 45226
Ph: 513-533-8611
Fax: 513-533-8285
E-mail: nioshdocket@cdc.gov
Internet: http://www.cdc.gov/nchs/products.htm

NATIONAL INSTITUTE OF STANDARDS AND TECHNOLOGY (NIST)
100 Bureau Drive
Stop 1070
Gaithersburg, MD 20899-1070
Ph: 301-975-NIST (6478
E-mail: inquiries@nist.gov
Internet: http://www.nist.gov

SOLAR RATING AND CERTIFICATION CORPORATION (SRCC)
1679 Clearlake Road
Cocoa, FL 32922-5703
Ph: 321-638-1537
Fax: 321-638-1010
E-mail: srcc@solar-rating.org
Internet: http://www.solar-rating.org

THE SOCIETY FOR PROTECTIVE COATINGS (SSPC)
40 24th Street, 6th Floor
Pittsburgh, PA 15222-4656
Ph: 412-281-2331
Fax: 412-281-9992
E-mail: info@sspc.org
Internet: http://www.sspc.org

UNDERWRITERS LABORATORIES (UL)
2600 N.W. Lake Road
Camas, WA 98607-8542
Ph: 877-854-3577
Fax: 360-817-6278
E-mail: CEC.us@us.ul.com
Internet: http://www.ul.com/
UL Directories available through IHS at http://www.ihs.com

U.S. AIR FORCE (USAF)
Air Force Publishing Distribution Center
E-mail: afdpo-ppl@pentagon.af.mil
Internet: http://www.e-publishing.af.mil/

U.S. ARMY (DA)
U.S. Army Publishing Directorate
Ph: 314-592-0910
Fax: 314-592-0923
Internet: http://www.apd.army.mil

U.S. ARMY CENTER FOR HEALTH PROMOTION AND PREVENTIVE MEDICINE (USACHPPM)
5158 Blackhawk Road
Aberdeen Proving Ground, MD 21010-5403
Ph: 800-222-9698
Fax: 1 (410) 436-7142
E-mail: chppmhhc@AMEDD.ARMY.MIL
Internet: http://chppm-www.apgea.army.mil

U.S. ARMY CORPS OF ENGINEERS (USACE)
Order CRD-C DOCUMENTS from:
U.S. Army Engineer Waterways Experiment Station
ATTN: Technical Report Distribution Section, Services Branch, TIC
3909 Halls Ferry Road
Vicksburg, MS 39180-6199
E-mail: MTC-INFO@erdc.usace.army.mil
Internet: http://gsl.erdc.usace.army.mil/SL/MTC/handbook/handbook.htm
Order Other Documents from:
USACE Publications Depot
Attn: CEHEC-IM-PD

2803 52nd Avenue
Hyattsville, MD 20781-1102
Ph: 301-394-0081
Fax: 301-394-0084
E-mail: pubs-army@usace.army.mil
Internet: http://www.usace.army.mil/publications

or http://www.hnc.usace.army.mil/Missions/Engineering/TECHINFO.aspx

U.S. ARMY ENVIRONMENTAL CENTER (USAEC)
5179 Hoadley Road
Aberdeen Proving Ground, MD 21010-5401
Internet: http://aec.army.mil/usaec
Order from:
National Technical Information Service (NTIS)
5301 Shawnee Road
Alexandria, VA 22312
Ph: 703-605-6050 or 1-888-584-8332
Fax: 703-605-6900
E-mail: info@ntis.gov

U.S. Code (USC)
Office of the Law Revision Counsel
Internet: http://uscode.house.gov/lawrevisioncounsel.shtml

U.S. DEPARTMENT OF DEFENSE (DOD)
Order DOD Documents from:
Room 3A750-The Pentagon
1400 Defense Pentagon
Washington, DC 20301-1400
Ph: 703-571-3343
FAX: 215-697-1462
E-mail: pia@hq.afis.asd.mil
Internet: http://www.dod.gov
Obtain Military Specifications, Standards and Related Publications from:
Acquisition Streamlining and Standardization Information System (ASSIST)
Department of Defense Single Stock Point (DODSSP)
Document Automation and Production Service (DAPS)
Building 4/D
700 Robbins Avenue
Philadelphia, PA 19111-5094
Ph: 215-697-6396 - for account/password issues
Internet: http://assist.daps.dla.mil/online/start/; account registration required
Obtain Unified Facilities Criteria (UFC) from:
Whole Building Design Guide (WBDG)
National Institute of Building Sciences (NIBS)
1090 Vermont Avenue NW, Suite 700
Washington, CD 20005
Ph: 202-289-7800
Fax: 202-289-1092
Internet: http://www.wbdg.org/references/docs_refs.php

U.S. DEPARTMENT OF ENERGY (DOE)
Order from:
1000 Independence Avenue Southwest
Washington, D.C. 20585
Ph: 202-586-5000
Fax: 202-586-4403
E-mail: The Secretary@hq.doe.gov
Internet: www.eere.energy.gov

U.S. ENVIRONMENTAL PROTECTION AGENCY (EPA)
Ariel Rios Building
1200 Pennsylvania Avenue, N.W.
Washington, DC 20004
Ph: 202-272-0167
for Fax and E-mail see below
Internet: http://www.epa.gov
--- Some EPA documents are available only from:
National Technical Information Service (NTIS)
5301 Shawnee Road
Alexandria, VA 22312
Ph: 703-605-6050 or 1-688-584-8332
Fax: 703-605-6900
E-mail: info@ntis.gov
Internet: http://www.ntis.gov

U. S. GREEN BUILDING COUNCIL (USGBC)
2101 L St NW, Suite 500
Washington, D.C. 20037
Fax: 202-828-5110
E-mail: info@usgbc.org
Internet: http://www.usgbc.org

U.S. GENERAL SERVICES ADMINISTRATION (GSA)
General Services Administration
1800 F Street, NW
Washington, DC 20405
Ph: 202-501-0800
Internet: www.GSA.gov
Obtain documents from:
Acquisition Streamlining and Standardization Information System (ASSIST)
Department of Defense Single Stock Point (DODSSP)
Document Automation and Production Service (DAPS)
Building 4/D
700 Robbins Avenue
Philadelphia, PA 19111-5094
Ph: 215-697-6396 - for account/password issues
Internet: http://assist.daps.dla.mil/online/start/; account registration required

U.S. NAVAL FACILITIES ENGINEERING COMMAND (NAVFAC)
1322 Patterson Ave. SE, Suite 1000
Washington Navy Yard, DC 20374
Ph: 757-322-4200
Fax: 757-322-4416
Internet: http://www.navfac.navy.mil

U.S. NAVAL FACILITIES ENGINEERING SERVICE CENTER (NFESC)
401 Industry Road, Suite 500
Louisville, KY 40208
Ph: 502-638-4400
Fax: 502-638-4300
E-mail: contact@nstcenter.com
Internet: http://www.nfesc.navy.mil

U.S. NAVAL SEA SYSTEMS COMMAND (NAVSEA)
Commander Naval Sea Systems Command
1333 Isaac Hull Ave., SE
Washington Navy Yard, DC 20376-1080
Ph: 202-781-0000
E-mail: navsea_publicqueries@navy.mil

PART 2 PRODUCTS

Not used

PART 3 EXECUTION

Not used

-- End of Section --

SECTION 01 45 00.10 20

QUALITY CONTROL FOR MINOR CONSTRUCTION
02/10

PART 1 GENERAL

1.1 REFERENCES

The publications listed below form a part of this specification to the extent referenced. The publications are referred to within the text by the basic designation only.

U.S. ARMY CORPS OF ENGINEERS (USACE)

EM 385-1-1	(2008; Change 1-2010; Change 3-2010; Errata 1-2010) Safety and Health Requirements Manual

1.2 SUBMITTALS

Government approval is required for submittals with a "G" designation; submittals not having a "G" designation are for Contractor Quality Control approval. When used, a designation following the "G" designation identifies the office that will review the submittal for the Government. The following shall be submitted in accordance with Section 01 33 00 SUBMITTAL PROCEDURES:

SD-01 Preconstruction Submittals

QC Plan; G,

Submit a QC plan within 15 calendar days after receipt of Notice of Award.

1.3 INFORMATION FOR THE CONTRACTING OFFICER (KO)

Prior to commencing work on construction, the Contractor can obtain a single copy set of the current report forms from the KO. The report forms will consist of the Contractor Production Report, Contractor Production Report (Continuation Sheet), Contractor Quality Control (CQC) Report, CQC Report (Continuation Sheet), Preparatory Phase Checklist, Initial Phase Checklist, Rework Items List, and Testing Plan and Log. Deliver the following to the KO:

a. CQC Report: Original and one copy, by 10:00 AM the next working week after each week that work is performed;

b. Contractor Production Report: Original and one copy by 10:00 AM the next working week after each week that work is performed;

c. Preparatory Phase Checklist: Original attached to the original CQC Report and one copy attached to each copy;

d. Initial Phase Checklist: Original attached to the original CQC Report and one copy attached to each copy;

e. Field Test Reports: One copy, within the week after the test is performed, attached to the CQC Report;

f. QC Meeting Minutes: One copy, within the week after the meeting; and

g. QC Certifications: As required by the paragraph entitled "QC Certifications."

1.4 QC PROGRAM REQUIREMENTS

Establish and maintain a QC program as described in this section. The QC program consists of a QC Manager, a QC plan, a Coordination and Mutual Understanding Meeting, QC meetings, three phases of control, submittal review and approval, testing, and QC certifications and documentation necessary to provide materials, equipment, workmanship, fabrication, construction and operations which comply with the requirements of this contract. The QC program shall cover on-site and off-site work and shall be keyed to the work sequence. No work or testing may be performed unless the QC Manager is on the work site; however, construction work may continue if the QC Manager is conducting QC related work for the specific project on base installations.

1.4.1 Preliminary Work Authorized Prior to Acceptance

The only work that is authorized to proceed prior to the acceptance of the QC plan is mobilization of storage and office trailers, temporary utilities, and surveying.

1.4.2 Acceptance

Acceptance of the QC plan is required prior to the start of construction. The KO reserves the right to require changes in the QC plan and operations as necessary, including removal of personnel, to ensure the specified quality of work. The KO reserves the right to interview any member of the QC organization at any time in order to verify the submitted qualifications.

1.4.3 Notification of Changes

Notify the KO, in writing, of any proposed change, including changes in the QC organization personnel, a minimum of seven calendar days prior to a proposed change. Proposed changes shall be subject to the acceptance by the KO.

1.5 QC ORGANIZATION

1.5.1 QC Manager

1.5.1.1 Duties

Provide a QC Manager at the work site to implement and manage the QC program. In addition to implementing and managing the QC program, the QC Manager may perform the duties of project superintendent. The QC Manager is required to attend the Coordination and Mutual Understanding Meeting, conduct the QC meetings, perform the three phases of control, perform submittal review and approval, ensure testing is performed and provide QC certifications and documentation required in this contract. The QC Manager

is responsible for managing and coordinating the three phases of control and documentation performed by others.

1.5.1.2 Qualifications

An individual with a minimum of 5 years combined experience as a superintendent, inspector, QC Manager, project manager, or construction manager on similar size and type construction contracts which included the major trades that are part of this contract. The individual must be familiar with the requirements of the EM 385-1-1 and have experience in the areas of hazard identification and safety compliance.

1.5.1.3 Construction Quality Management Training

In addition to the above experience and education requirements, the QC Manager shall have completed the course Construction Quality Management for Contractors and will have a current certificate.

1.5.2 Alternate QC Manager Duties and Qualifications

Designate an alternate for the QC Manager to serve in the event of the designated QC Manager's absence. The period of absence may not exceed two weeks at one time, and not more than 30 workdays during a calendar year. The qualification requirements for the Alternate QC Manager shall be the same as for the QC Manager.

1.6 QC PLAN

1.6.1 Requirements

Provide, for acceptance by the KO, a QC plan submitted in a three-ring binder that covers both on-site and off-site work and includes the following with a table of contents listing the major sections identified with tabs.

I. QC ORGANIZATION: A chart showing the QC organizational structure and its relationship to the production side of the organization.

II. NAMES AND QUALIFICATIONS: In resume format, for each person in the QC organization. Include the CQM for Contractors course certification required by the paragraph entitled "Construction Quality Management Training".

III. DUTIES, RESPONSIBILITY AND AUTHORITY OF QC PERSONAL: Of each person in the QC organization.

IV. OUTSIDE ORGANIZATIONS: A listing of outside organizations such as architectural and consulting engineering firms that will be employed by the Contractor and a description of the services these firms will provide.

V. APPOINTMENT LETTERS: Letters signed by an officer of the firm appointing the QC Manager and Alternate QC Manager and stating that they are responsible for managing and implementing the QC program as described in this contract. Include in this letter the QC Manager's authority to direct the removal and replacement of non-conforming work.

VI. SUBMITTAL PROCEDURES AND INITIAL SUBMITTAL REGISTER: Procedures for reviewing, approving and managing submittals. Provide the name(s) of the person(s) in the QC organization authorized to review and certify submittals prior to approval.

VII. TESTING LABORATORY INFORMATION: Testing laboratory information required by the paragraphs "Accredited Laboratories" or "Testing Laboratory Requirements", as applicable.

VIII. TESTING PLAN AND LOG: A Testing Plan and Log that includes the tests required, referenced by the specification paragraph number requiring the test, the frequency, and the person responsible for each test.

IX. PROCEDURES TO COMPLETE REWORK ITEMS: Procedures to identify, record, track and complete rework items.

X. DOCUMENTATION PROCEDURES: Use Government formats.

XI. LIST OF DEFINABLE FEATURES: A Definable Feature of Work (DFOW) is a task, which is separate and distinct from other tasks, has the same control requirements and work crews. The list shall be cross-referenced to the Contractor's Construction Schedule and the specification sections. For projects requiring a Progress Chart, the list of definable features of work shall include but not be limited to all items of work on the schedule. For projects requiring a Network Analysis Schedule, the list of definable features of work shall include but not be limited to all critical path activities.

XII. PROCEDURES FOR PERFORMING THREE PHASES OF CONTROL: For each DFOW provide Preparatory and Initial Phase Checklists. Each list shall include a breakdown of quality checks that will be used when performing the quality control functions, inspections, and tests required by the contract documents. The preparatory and initial phases shall be conducted with a view towards obtaining quality construction by planning ahead and identifying potential problems.

XIII. PROCEDURES FOR COMPLETION INSPECTION: See the paragraph entitled "COMPLETION INSPECTIONS".

1.7 COORDINATION AND MUTUAL UNDERSTANDING MEETING

During the Pre-Construction conference and prior to the start of construction, discuss the QC program required by this contract. The purpose of this meeting is to develop a mutual understanding of the QC details, including documentation, administration for on-site and off-site work, and the coordination of the Contractor's management, production and the QC personnel. At the meeting, the Contractor will be required to explain how three phases of control will be implemented for each DFOW. Contractor's personnel required to attend shall include the QC Manager, project manager, and superintendent. Minutes of the meeting will be prepared by the QC Manager and signed by both the Contractor and the KO. The Contractor shall provide a copy of the signed minutes to all attendees. Repeat the coordination and mutual understanding meeting when a new QC Manager is appointed.

1.8 QC MEETINGS

After the start of construction, the QC Manager shall conduct QC meetings once every two weeks at the work site with the superintendent and the foreman responsible for the ongoing and upcoming work. The QC Manager shall prepare the minutes of the meeting and provide a copy to the KO within two working days after the meeting. As a minimum, the following shall be accomplished at each meeting:

a. Review the minutes of the previous meeting;

b. Review the schedule and the status of work and rework;

c. Review the status of submittals;

d. Review the work to be accomplished in the next two weeks and documentation required;

e. Resolve QC and production problems (RFIs, etc.);

f. Address items that may require revising the QC plan; and

g. Review Accident Prevention Plan (APP).

1.9 THREE PHASES OF CONTROL

The three phases of control shall adequately cover both on-site and off-site work and shall include the following for each DFOW.

1.9.1 Preparatory Phase

Notify the KO at least two work days in advance of each preparatory phase. Conduct the preparatory phase with the superintendent and the foreman responsible for the definable feature of work. Document the results of the preparatory phase actions in the daily CQC Report and in the QC checklist. Perform the following prior to beginning work on each definable feature of work:

a. Review each paragraph of the applicable specification sections;

b. Review the contract drawings;

c. Verify that appropriate shop drawings and submittals for materials and equipment have been submitted and approved. Verify receipt of approved factory test results, when required;

d. Review the testing plan and ensure that provisions have been made to provide the required QC testing;

e. Examine the work area to ensure that the required preliminary work has been completed;

f. Examine the required materials, equipment and sample work to ensure that they are on hand and conform to the approved shop drawings and submitted data;

g. Review the APP and appropriate Activity Hazard Analysis (AHA) to ensure that applicable safety requirements are met, and that required Material Safety Data Sheets (MSDS) are submitted; and

h. Discuss specific controls used and the construction methods and the approach that will be used to provide quality construction by planning ahead and identifying potential problems for each DFOW.

1.9.2 Initial Phase

Notify the KO at least two work days in advance of each initial phase. When construction crews are ready to start work on a DFOW, conduct the Initial Phase with the foreman responsible for that DFOW. Observe the initial segment of the work to ensure that it complies with contract requirements. Document the results of the Initial Phase in the daily CQC Report and in the QC checklist. Perform the following for each DFOW:

a. Establish the quality of workmanship required;

b. Resolve conflicts;

c. Ensure that testing is performed by the approved laboratory; and

d. Check work procedures for compliance with the APP and the appropriate AHA to ensure that applicable safety requirements are met.

1.9.3 Follow-Up Phase

Perform the following for on-going work daily, or more frequently as necessary, until the completion of each DFOW and document in the daily CQC Report and in the QC checklist:

a. Ensure the work is in compliance with contract requirements;

b. Maintain the quality of workmanship required;

c. Ensure that testing is performed by the approved laboratory;

d. Ensure that rework items are being corrected; and

e. Assure manufacturers representatives have performed necessary inspections, if required.

1.9.4 Additional Preparatory and Initial Phases

Additional preparatory and initial phases shall be conducted on the same DFOW if the quality of on-going work is unacceptable, if there are changes in the applicable QC organization, if there are changes in the on-site production supervision or work crew, if work on a DFOW is resumed after substantial period of inactivity, or if other problems develop.

1.9.5 Notification of Three Phases of Control for Off-Site Work

Notify the KO at least two weeks prior to the start of the preparatory and initial phases.

1.10 SUBMITTAL REVIEW AND APPROVAL

Procedures for submission, review, and approval of submittals are described in the submittal section of the specification.

1.11 TESTING

Except as stated otherwise in the specification sections, perform sampling and testing required under this contract.

1.11.1 Accreditation Requirements

Construction materials testing laboratories must be accredited by a laboratory accreditation authority and will be required to submit a copy of the Certificate of Accreditation and Scope of Accreditation. The laboratory's scope of accreditation must include the appropriate ASTM standards (i.e.; E 329, C 1077, D 3666, D 3740, A 880, E 543) listed in the technical sections of the specifications. Laboratories engaged in Hazardous Materials Testing shall meet the requirements of OSHA and EPA. The policy applies to the specific laboratory performing the actual testing, not just the "Corporate Office."

1.11.2 Laboratory Accreditation Authorities

Laboratory Accreditation Authorities include the National Voluntary Laboratory Accreditation Program (NVLAP) administered by the National Institute of Standards and Technology, the American Association of State Highway and Transportation Officials (AASHTO), International Accreditation Services, Inc. (IAS), U. S. Army Corps of Engineers Materials Testing Center (MTC), the American Association for Laboratory Accreditation (A2LA), the Washington Association of Building Officials (WABO) (Approval authority for WABO is limited to projects within Washington State), and the Washington Area Council of Engineering Laboratories (WACEL) (Approval authority by WACEL is limited to projects within the EFA Chesapeake and Public Works Center Washington geographical area).

1.11.3 Capability Check

The KO retains the right to check laboratory equipment in the proposed laboratory and the laboratory technician's testing procedures, techniques, and other items pertinent to testing, for compliance with the standards set forth in this contract.

1.11.4 Test Results

Cite applicable Contract requirements, tests or analytical procedures used. Provide actual results and include a statement that the item tested or analyzed conforms or fails to conform to specified requirements. If the item fails to conform, notify the KO immediately. Conspicuously stamp the cover sheet for each report in large red letters "CONFORMS" or "DOES NOT CONFORM" to the specification requirements, whichever is applicable. Test results shall be signed by a testing laboratory representative authorized to sign certified test reports. Furnish the signed reports, certifications, and other documentation to the KO.

1.12 QC CERTIFICATIONS

1.12.1 Contractor Quality Control Report Certification

Each CQC Report shall contain the following statement: "On behalf of the Contractor, I certify that this report is complete and correct and equipment and material used and work performed during this reporting period is in compliance with the contract drawings and specifications to the best of my knowledge except as noted in this report."

1.12.2 Invoice Certification

Furnish a certificate to the KO with each payment request, signed by the QC Manager, attesting that as-built drawings are current and attesting that the work for which payment is requested, including stored material, is in compliance with contract requirements.

1.12.3 Completion Certification

Upon completion of work under this contract, the QC Manager shall furnish a certificate to the KO attesting that "the work has been completed, inspected, tested and is in compliance with the contract."

1.13 COMPLETION INSPECTIONS

1.13.1 Punch-Out Inspection

Near the completion of all work or any increment thereof established by a completion time stated in the Contract clause "Commencement, Prosecution, and Completion of Work," or stated elsewhere in the specifications, the QC Manager shall conduct an inspection of the work and develop a punch list of items which do not conform to the approved drawings and specifications. Include in the punch list any remaining items of the "Rework Items List", which were not corrected prior to the Punch-Out inspection. The punch list shall include the estimated date by which the deficiencies will be corrected. A copy of the punch list shall be provided to the KO. The QC Manager or staff shall make follow-on inspections to ascertain that all deficiencies have been corrected. Once this is accomplished, the Contractor shall notify the Government that the facility is ready for the Government "Pre-Final Inspection".

1.13.2 Pre-Final Inspection

The Government and QC manager will perform this inspection to verify that the facility is complete and ready to be occupied. A Government pre-final punch list may be developed as a result of this inspection. The QC Manager shall ensure that all items on this list are corrected prior to notifying the Government that a "Final" inspection with the customer can be scheduled. Any items noted on the "Pre-Final" inspection shall be corrected in a timely manner and shall be accomplished before the contract completion date for the work or any particular increment thereof if the project is divided into increments by separate completion dates.

1.13.3 Final Acceptance Inspection

The QC Manager, the superintendent, or other Contractor management personnel and the KO will be in attendance at this inspection. Additional

Government personnel may be in attendance. The final acceptance inspection will be formally scheduled by the KO based upon results of the "Pre-Final Inspection". Notice shall be given to the KO at least 14 days prior to the final inspection. The notice shall state that all specific items previously identified to the Contractor as being unacceptable will be complete by the date scheduled for the final acceptance inspection. Failure of the Contractor to have all contract work acceptably complete for this inspection will be cause for the KO to bill the Contractor for the Government's additional inspection cost in accordance with the contract clause "Inspection of Construction".

1.14 DOCUMENTATION

Maintain current and complete records of on-site and off-site QC program operations and activities. The forms identified under the paragraph "INFORMATION FOR THE CONTRACTING OFFICER (KO)" shall be used. Reports are required for each day work is performed. Account for each calendar day throughout the life of the contract. Every space on the forms must be filled in. Use N/A if nothing can be reported in one of the spaces. The superintendent and the QC Manager must prepare and sign the Contractor Production and CQC Reports, respectively. The reporting of work shall be identified by terminology consistent with the construction schedule. In the "remarks" section in this report which will contain pertinent information including directions received, problems encountered during construction, work progress and delays, conflicts or errors in the drawings or specifications, field changes, safety hazards encountered, instructions given and corrective actions taken, delays encountered and a record of visitors to the work site. For each remark given, identify the Schedule Activity No. that is associated with the remark.

1.14.1 Quality Control Validation

Establish and maintain the following in a series of three ring binders. Binders shall be divided and tabbed as shown below. These binders shall be readily available to the Government's Quality Assurance Team during all business hours.

a. All completed Preparatory and Initial Phase Checklists, arranged by specification section.

b. All milestone inspections, arranged by Activity/Event Number.

c. A current up-to-date copy of the Testing and Plan Log with supporting field test reports, arranged by specification section.

d. Copies of all contract modifications, arranged in numerical order. Also include documentation that modified work was accomplished.

e. A current up-to-date copy of the Rework Items List.

f. Maintain up-to-date copies of all punch lists issued by the QC Staff on the Contractor and Sub-Contractors and all punch lists issued by the Government.

1.14.2 As-Built Drawings

The QC Manager is required to review the as-built drawings, required by Section 01 78 00 CLOSEOUT SUBMITTALS, are kept current on a daily basis and marked to show deviations, which have been made from the Contract drawings. Ensure each deviation has been identified with the appropriate modifying documentation, e.g. PC number, modification number, RFI number, etc. The QC Manager shall initial each deviation or revision. Upon completion of work, the QC Manager shall submit a certificate attesting to the accuracy of the as-built drawings prior to submission to the KO.

1.15 NOTIFICATION ON NON-COMPLIANCE

The KO will notify the Contractor of any detected non-compliance with the foregoing requirements. The Contractor shall take immediate corrective action. If the contractor fails or refuses to correct the non-compliant work, the KO will issue a non compliance notice. Such notice, when delivered to the Contractor at the work site, shall be deemed sufficient for the purpose of notification. If the Contractor fails or refuses to comply promptly, the KO may issue an order stopping all or part of the work until satisfactory corrective action has been taken. The Contractor shall make no part of the time lost due to such stop orders the subject of claim for extension of time, for excess costs, or damages.

PART 2 PRODUCTS

Not Used

PART 3 EXECUTION

Not Used

-- End of Section --

SECTION 01 50 00

TEMPORARY CONSTRUCTION FACILITIES AND CONTROLS
08/09

PART 1 GENERAL

1.1 SUMMARY

Requirements of this Section apply to, and are a component of, each section of the specifications.

1.2 REFERENCES

The publications listed below form a part of this specification to the extent referenced. The publications are referred to within the text by the basic designation only.

AMERICAN WATER WORKS ASSOCIATION (AWWA)

AWWA C511	(2007) Standard for Reduced-Pressure Principle Backflow Prevention Assembly

FOUNDATION FOR CROSS-CONNECTION CONTROL AND HYDRAULIC RESEARCH (FCCCHR)

FCCCHR List	(continuously updated) List of Approved Backflow Prevention Assemblies
FCCCHR Manual	(1988e9) Manual of Cross-Connection Control

NATIONAL FIRE PROTECTION ASSOCIATION (NFPA)

NFPA 241	(2009) Standard for Safeguarding Construction, Alteration, and Demolition Operations
NFPA 70	(2011) National Electrical Code

U.S. FEDERAL AVIATION ADMINISTRATION (FAA)

FAA AC 70/7460-1	(2007; Rev K) Obstruction Marking and Lighting

U.S. FEDERAL HIGHWAY ADMINISTRATION (FHWA)

MUTCD	(2000) Manual of Uniform Traffic Control Devices

1.3 SUBMITTALS

Government approval is required for submittals with a "G" designation; submittals not having a "G" designation are for Contractor Quality Control approval. When used, a designation following the "G" designation identifies the office that will review the submittal for the Government.

Submitted the following in accordance with Section 01 33 00 SUBMITTAL PROCEDURES:

SD-01 Preconstruction Submittals

Construction site plan; G

Traffic control plan; G

SD-03 Product Data

Backflow preventer; G

SD-06 Test Reports

Backflow Preventer Tests; G

SD-07 Certificates

Backflow Tester Certification; G

Backflow Preventers Certificate of Full Approval

1.4 CONSTRUCTION SITE PLAN

Prior to the start of work, submit a site plan showing the locations and dimensions of temporary facilities (including layouts and details, equipment and material storage area (onsite and offsite), and access and haul routes, avenues of ingress/egress to the fenced area and details of the fence installation. Identify any areas which may have to be graveled to prevent the tracking of mud. Indicate if the use of a supplemental or other staging area is desired. Show locations of safety and construction fences, site trailers, construction entrances, trash dumpsters, temporary sanitary facilities, and worker parking areas.

1.5 BACKFLOW PREVENTERS CERTIFICATE

Certificate of Full Approval from FCCCHR List, University of Southern California, attesting that the design, size and make of each backflow preventer has satisfactorily passed the complete sequence of performance testing and evaluation for the respective level of approval. Certificate of Provisional Approval will not be acceptable.

1.5.1 Backflow Tester Certificate

Prior to testing, submit to the Contracting Officer certification issued by the State or local regulatory agency attesting that the backflow tester has successfully completed a certification course sponsored by the regulatory agency. Tester must not be affiliated with any company participating in any other phase of this Contract.

1.5.2 Backflow Prevention Training Certificate

Submit a certificate recognized by the State or local authority that states the Contractor has completed at least 10 hours of training in backflow preventer installations. The certificate must be current.

1.6 TEMPORARY UTILITIES

Reasonable amounts of the following utilities will be made available to the Contractor at the prevailing rates.

1.6.1 Contractor Utilities

For electricity and potable water. The Contractor shall be responsible for verifying the prevailing rates and providing for all costs in the bid or offer. The Government retains the right to change these rates as necessary.

1.6.2 Utility Services

Utility Services will be provided through the Base Operations Support (BOS) Contractor. The Contractor shall pay all costs for coordination, interruption and other utility services. Utility interruption includes connecting, converting, and transferring the utilities (power, water, sewer, fire protection, air conditioning and ventilation system, etc) to the work. Procedure for requesting and paying for utility services will be provided by the Contracting Officer. The Contractor shall make connections, including providing backflow-preventing devices to domestic water line and fire sprinkler system; providing meters; and providing transformers; and make disconnections.

1.6.3 Dig Permits and Miscellaneous Services

Dig permits and miscellaneous services will be provided through the Base Operations Support (BOS) Contractor. The Contractor shall coordinate with the Government for dig permits and miscellaneous services provided by the BOS Contractor. Location of utilities will be marked by the BOS Contractor once. The construction Contractor shall maintain the markings. Procedure for requesting for dig permits and miscellaneous services will be provided by the Contracting Officer.

1.7 WEATHER PROTECTION

Take necessary precautions to ensure that roof openings and other critical openings in the building are monitored carefully. Take immediate actions required to seal off such openings when rain or other detrimental weather is imminent, and at the end of each workday.

1.7.1 Building and Site Storm Protection

When a warning of gale force winds is issued, take precautions to minimize danger to persons, and protect the work and nearby Government property. Precautions shall include, but are not limited to, closing openings; removing loose materials, tools and equipment from exposed locations; and removing or securing scaffolding and other temporary work. Close openings in the work when storms of lesser intensity pose a threat to the work or any nearby Government property.

1.7.2 Typhoon Condition of Readiness

Unless directed otherwise, comply with:

1.7.2.1 Responsibility

The Contractor, at no additional cost to the Government shall be responsible for the security and safety of the construction work and the site, including the Contractor's project site, when warnings of winds of gale force are issued. Gale force winds are defined as having a sustained velocity of 34-knots or better and include winds of tropical storm or typhoon intensity. Satisfactory job site clean up is the initial, basic day-to-day, minimal preparation the Contractor can make for winds of destructive force.

1.7.2.2 Preparation

When warnings of gale force winds are issued, the Contractor shall carry out, without delay, all directives concerning desired action to be taken, which may be issued to him by the Contracting Officer or his designated representative. This preparation is in accordance with the contract terms and every practicable precaution will be taken to minimize danger to persons, to prevent damage to work in place, materials, supplies, equipment, adjacent structures, and property of others; and is in public interest.

1.7.2.3 Tropical Cyclone Conditions of Readiness (COR)

CORs are set by Commander, Naval Forces Marianas, when winds of 50-knots are expected to occur locally. Sustained winds of 50 knots or greater could result from either a tropical storm or a typhoon approaching or forming over Guam.

a. Tropical Cyclone COR Four. A sustained wind of 50-knots or greater is possible within 72 hours. The minimum mandatory action required of the Contractor is noted below:

b. Tropical Cyclone COR Three. Sustained winds of 50-knots or greater is expected within 48 hours. The minimum mandatory action required of the Contractor is noted below:

c. Tropical Cyclone COR Two. Sustained winds of 50-knots or greater is expected within 24 hours. The minimum mandatory action required of the Contractor is noted below:

d. Tropical Cyclone COR One. A sustained wind of 50-knots or greater is expected within 12 hours. The minimum mandatory action required of the Contractor is noted below:

1.7.2.4 COR Four

During COR Four, the normal condition of readiness on Guam and in the Trust Territory of the Pacific Island requires daily job site clean up and good housekeeping practices. The Contractor shall collect and store in piles or contain all scrap lumber, waste materials, and rubbish for regular removal and disposal no less frequently than at close of each workday's work. The construction site, including storage areas, shall be maintained free of accumulations of debris at all times by the Contractor. Form lumber, which is not incorporated into forms, shall be stacked in neat piles less than 4 feet high at the close of work each day or shall be removed from the job site. Upon erection or mobilization at the job site,

construction shacks or shanties shall be secured to withstand typhoon intensity winds and shall be neat and maintained in good order.

1.7.2.5 Planning

Planning for all job operations shall include the total systems response capabilities available to minimize the consequences of accident or natural disaster. These normal job sites clean up operations shall be conducted to the satisfaction of the Contracting Officer or his designated representative.

1.7.2.6 COR Three

When COR Three is set, the Contractor shall attain the job site condition required for Typhoon Condition Three prior to close of work that day. In addition, the Contractor shall commence all securing operations for typhoon that cannot be completed within 18 hours. If this condition is set during holiday or weekend, the Contractor shall proceed as above, i.e., the same as if it were a normal working day. If this condition is set at night, the Contractor shall establish his plan of securing operations for the next day at commence at first light of day if still in Condition Three or greater (Conditions 2 or 1).

1.7.2.7 COR Two

When COR Two is set, the Contractor shall cease routine activities to allow maximum securing effort if such will interfere with his normal routine. If winds of typhoon force are expected, form work and scaffolding shall be reinforced or removed if necessary and all machinery, tools, Government-furnished materials or equipment, etc., shall be secured and if necessary, removed from the job site or placed inside a typhoon shelter. If this condition is set at night or during a holiday or weekend, the above action shall be taken at the earliest opportunity and accomplished to the satisfaction of the Contracting Officer or his authorized representative.

1.7.2.8 COR One

When COR One is set, the job site shall be secured and all personnel shall report to shelter. The Contractor shall ensure that the job site is secured to the satisfaction of the Contracting Officer or his designated representative before he has released his work force to report to shelter.

1.7.2.9 COR Four "All Clear"

When COR Four "All Clear" is set after the passing of the destructive winds, the Contractor shall return to the job site to assess damages and immediately restore the job site to the Satisfaction of Officer in Charge or his designated representative. The job site restoration/clean up shall be in accordance with the contract terms and every practicable precaution shall be taken to minimize danger to people, to prevent damage to work in place, materials, supplies, equipment, adjacent structures, and property of others; and is in public interest. However, before proceeding with restoration/clean up requiring significant time and cost, a clean up plan shall be discussed with and submitted to the Contracting Officer or his designated representative for approval.

PART 2 PRODUCTS

2.1 TEMPORARY SIGNAGE

2.1.1 Bulletin Board

Immediately upon beginning of work, provide a weatherproof glass-covered bulletin board not less than 36 by 48 inches in size for displaying the Equal Employment Opportunity poster, a copy of the wage decision contained in the contract, Wage Rate Information poster, and other information approved by the Contracting Officer. Locate the bulletin board at the project site in a conspicuous place easily accessible to all employees, as approved by the Contracting Officer.

2.1.2 Project and Safety Signs

The requirements for the signs, their content, and location are as specified in Section 01 58 00 PROJECT IDENTIFICATION. Erect signs within 15 days after receipt of the notice to proceed. Correct the data required by the safety sign daily, with light colored metallic or non-metallic numerals.

2.2 TEMPORARY TRAFFIC CONTROL

2.2.1 Haul Roads

At contractor’s expense construct access and haul roads necessary for proper prosecution of the work under this contract. Construct with suitable grades and widths; sharp curves, blind corners, and dangerous cross traffic are be avoided. Provide necessary lighting, signs, barricades, and distinctive markings for the safe movement of traffic. The method of dust control, although optional, must be adequate to ensure safe operation at all times. Location, grade, width, and alignment of construction and hauling roads are subject to approval by the Contracting Officer. Lighting must be adequate to assure full and clear visibility for full width of haul road and work areas during any night work operations.

2.2.2 Barricades

Erect and maintain temporary barricades to limit public access to hazardous areas. Whenever safe public access to paved areas such as roads, parking areas or sidewalks is prevented by construction activities or as otherwise necessary to ensure the safety of both pedestrian and vehicular traffic barricades will be required. Securely place barricades clearly visible with adequate illumination to provide sufficient visual warning of the hazard during both day and night.

2.2.3 Fencing

a. Provide fencing along the construction site at all open excavations and tunnels to control access by unauthorized people. Fencing must be installed to be able to restrain a force of at least 250 pounds against it.

2.2.4 Temporary Wiring

Provide temporary wiring in accordance with NFPA 241 and NFPA 70, Article 305-6(b), Assured Equipment Grounding Conductor Program. Include frequent inspection of all equipment and apparatus.

2.2.5 Backflow Preventers

Reduced pressure principle type conforming to the applicable requirements AWWA C511. Provide backflow preventers complete with 150 pound flanged cast iron, mounted gate valve stainless steel or bronze, internal parts. The particular make, model/design, and size of backflow preventers to be installed must be included in the latest edition of the List of Approved Backflow Prevention Assemblies issued by the FCCCHR List and be accompanied by a Certificate of Full Approval from FCCCHR List. After installation conduct Backflow Preventer Tests and provide test reports verifying that the installation meets the FCCCHR Manual Standards.

PART 3 EXECUTION

3.1 EMPLOYEE PARKING

Contractor employees will park privately owned vehicles in an area designated by the Contracting Officer. This area will be within reasonable walking distance of the construction site. Contractor employee parking must not interfere with existing and established parking requirements of the government installation.

3.2 AVAILABILITY AND USE OF UTILITY SERVICES

3.2.1 Temporary Utilities

Reasonable amounts of the following utilities will be made available to the Contractor at the prevailing rates.

3.2.2 Payment for Utility Services

a. The Government will make all reasonably required utilities available to the Contractor from existing outlets and supplies, as specified in the contract. Unless otherwise provided in the contract, the amount of each utility service consumed will be charged to or paid for by the Contractor at prevailing rates charged to the Government or, where the utility is produced by the Government, at reasonable rates determined by the Contracting Officer. Carefully conserve any utilities furnished without charge.

b. Reasonable amounts of the following utilities will be made available to the Contractor at the prevailing rates.

c. The point at which the Government will deliver such utilities or services and the quantity available is as indicated. Pay all costs incurred in connecting, converting, and transferring the utilities to the work. Make connections, including providing backflow-preventing devices on connections to domestic water lines; providing meters; and providing transformers; and make disconnections.

3.2.3 Meters and Temporary Connections

At the Contractors expense and in a manner satisfactory to the Contracting Officer, provide and maintain necessary temporary connections, distribution lines, and meter bases (Government will provide meters) required to measure the amount of each utility used for the purpose of determining charges. Notify the Contracting Officer, in writing, 5 working days before final electrical connection is desired so that a utilities contract can be established. The Government will provide a meter and make the final hot connection after inspection and approval of the Contractor's temporary wiring installation. The Contractor will not make the final electrical connection.

3.2.4 Advance Deposit

An advance deposit for utilities consisting of an estimated month's usage or a minimum of $50.00 will be required. The last monthly bills for the fiscal year will normally be offset by the deposit and adjustments will be billed or returned as appropriate. Services to be rendered for the next fiscal year, beginning 1 October, will require a new deposit. Notification of the due date for this deposit will be mailed to the Contractor prior to the end of the current fiscal year.

3.2.5 Final Meter Reading

Before completion of the work and final acceptance of the work by the Government, notify the Contracting Officer, in writing, 5 working days before termination is desired. The Government will take a final meter reading, disconnect service, and remove the meters. Then remove all the temporary distribution lines, meter bases, and associated paraphernalia. Pay all outstanding utility bills before final acceptance of the work by the Government.

3.2.6 Utilities at Special Locations

3.2.6.1 Utilities at Guam by Contractor for Special Projects

Contact the Government of Guam for water and electricity.

3.2.12 Sanitation

a. Provide and maintain within the construction area minimum field-type sanitary facilities approved by the Contracting Officer and periodically empty wastes into a municipal, district, or station sanitary sewage system, or remove waste to a commercial facility. Obtain approval from the system owner prior to discharge into any municipal, district, or commercial sanitary sewer system. Any penalties and / or fines associated with improper discharge will be the responsibility of the Contractor. Coordinate with the Contracting Officer and follow station regulations and procedures when discharging into the station sanitary sewer system. Maintain these conveniences at all times without nuisance. Include provisions for pest control and elimination of odors. Government toilet facilities will not be available to Contractor's personnel.

b. Provide temporary sewer and sanitation facilities that are self-contained units with both urinals and stool capabilities. Ventilate the

units to control odors and fumes and empty and clean them at least once a week or more often if required by the Contracting Officer. The doors shall be self-closing. The exterior of the unit shall match the base standard color. Locate the facility behind the construction fence or out of the public view.

3.2.13 Telephone

Make arrangements and pay all costs for telephone facilities desired.

3.2.14 Obstruction Lighting of Cranes

Provide a minimum of 2 aviation red or high intensity white obstruction lights on temporary structures (including cranes) over 100 feet above ground level. Light construction and installation must comply with FAA AC 70/7460-1. Lights must be operational during periods of reduced visibility, darkness, and as directed by the Contracting Officer.

3.2.15 Fire Protection

Provide temporary fire protection equipment for the protection of personnel and property during construction. Remove debris and flammable materials daily to minimize potential hazards.

3.3 TRAFFIC PROVISIONS

3.3.1 Maintenance of Traffic

a. Conduct operations in a manner that will not close any thoroughfare or interfere in any way with traffic on railways or highways except with written permission of the Contracting Officer at least 15 calendar days prior to the proposed modification date, and provide a Traffic Control Plan detailing the proposed controls to traffic movement for approval. The plan must be in accordance with State and local regulations and the MUTCD, Part VI. Make all notifications and obtain any permits required for modification to traffic movements outside Station's jurisdiction. Contractor may move oversized and slow-moving vehicles to the worksite provided requirements of the highway authority have been met.

b. Conduct work so as to minimize obstruction of traffic, and maintain traffic on at least half of the roadway width at all times. Obtain approval from the Contracting Officer prior to starting any activity that will obstruct traffic.

c. Provide, erect, and maintain, at contractors expense, lights, barriers, signals, passageways, detours, and other items, that may be required by the Life Safety Signage, overhead protection authority having jurisdiction.

3.3.2 Protection of Traffic

Maintain and protect traffic on all affected roads during the construction period except as otherwise specifically directed by the Contracting Officer. Measures for the protection and diversion of traffic, including the provision of watchmen and flagmen, erection of barricades, placing of lights around and in front of equipment the work, and the erection and maintenance of adequate warning, danger, and direction signs, will be as

required by the State and local authorities having jurisdiction. Protect the traveling public from damage to person and property. Minimize the interference with public traffic on roads selected for hauling material to and from the site. Investigate the adequacy of existing roads and their allowable load limit. Contractor is responsible for the repair of any damage to roads caused by construction operations.

3.3.3 Rush Hour Restrictions

Do not interfere with the peak traffic flows preceding and during normal operations without notification to and approval by the Contracting Officer.

3.3.4 Dust Control

Dust control methods and procedures must be approved by the Contracting Officer. Treat dust abatement on access roads with applications of calcium chloride, water sprinklers, or similar methods or treatment.

3.4 CONTRACTOR'S TEMPORARY FACILITIES

3.4.1 Safety

Protect the integrity of any installed safety systems or personnel safety devices. If entrance into systems serving safety devices is required, the Contractor must obtain prior approval from the Contracting Officer. If it is temporarily necessary to remove or disable personnel safety devices in order to accomplish contract requirements, provide alternative means of protection prior to removing or disabling any permanently installed safety devices or equipment and obtain approval from the Contracting Officer.

3.4.2 Administrative Field Offices

Provide and maintain administrative field office facilities within the construction area at the designated site. Government office and warehouse facilities will not be available to the Contractor's personnel.

3.4.3 Storage Area

Construct a temporary 6 foot high chain link fence around trailers and materials. Include plastic strip inserts, colored green, so that visibility through the fence is obstructed. Fence posts may be driven, in lieu of concrete bases, where soil conditions permit. Do not place or store Trailers, materials, or equipment outside the fenced area unless such trailers, materials, or equipment are assigned a separate and distinct storage area by the Contracting Officer away from the vicinity of the construction site but within the installation boundaries. Trailers, equipment, or materials must not be open to public view with the exception of those items which are in support of ongoing work on any given day. Do not stockpile materials outside the fence in preparation for the next day's work. Park mobile equipment, such as tractors, wheeled lifting equipment, cranes, trucks, and like equipment within the fenced area at the end of each work day.

3.4.4 Supplemental Storage Area

Upon Contractor's request, the Contracting Officer will designate another or supplemental area for the Contractor's use and storage of trailers,

equipment, and materials. This area may not be in close proximity of the construction site but will be within the installation boundaries. Fencing of materials or equipment will not be required at this site; however, the Contractor is responsible for cleanliness and orderliness of the area used and for the security of any material or equipment stored in this area. Utilities will not be provided to this area by the Government.

3.4.5 Appearance of Trailers

a. Trailers utilized by the Contractor for administrative or material storage purposes must present a clean and neat exterior appearance and be in a state of good repair. Trailers which, in the opinion of the Contracting Officer, require exterior painting or maintenance will not be allowed on installation property.

b. Paint using suitable paint and maintain the temporary facilities. Failure to do so will be sufficient reason to require their removal.

3.4.6 Trailers or Storage Buildings

a. Trailers or storage buildings will be permitted, where space is available, subject to the approval of the Contracting Officer. The trailers or buildings shall be in good condition, free from visible damage rust and deterioration, and meet all applicable safety requirements. Trailers shall be roadworthy and comply with all appropriate state and local vehicle requirements. Failure to maintain storage trailers or buildings to these standards shall result in the removal of non-complying units at the Contractor's expense. A sign not smaller than 24 by 24 inches shall be conspicuously placed on the trailer depicting the company name, business phone number, and emergency phone number. Trailers shall be anchored to resist high winds and must meet applicable state of local standards for anchoring mobile trailers.

3.4.7 Maintenance of Storage Area

a. Keep fencing in a state of good repair and proper alignment. Grassed or unpaved areas, which are not established roadways, will be covered with a layer of gravel as necessary to prevent rutting and the tracking of mud onto paved or established roadways, should the Contractor elect to traverse them with construction equipment or other vehicles; gravel gradation will be at the Contractor's discretion. Mow and maintain grass located within the boundaries of the construction site for the duration of the project. Grass and vegetation along fences, buildings, under trailers, and in areas not accessible to mowers will be edged or trimmed neatly.

3.4.8 New Building

In the event a new building is constructed for the temporary project field office, it will be a minimum 12 feet in width, 16 feet in length and have a minimum of 7 feet headroom. Equip the building with approved electrical wiring, at least one double convenience outlet and the required switches and fuses to provide 110-120 volt power. Provide a work table with stool, desk with chair, two additional chairs, and one legal size file cabinet that can be locked. The building must be waterproof, supplied with a heater, have a minimum of two doors, electric lights, a telephone, a

battery operated smoke detector alarm, a sufficient number of adjustable windows for adequate light and ventilation, and a supply of approved drinking water. Approved sanitary facilities must be furnished. Screen the windows and doors and provide the doors with dead bolt type locking devices or a padlock and heavy duty hasp bolted to the door. Door hinge pins will be non-removable. Arrange the windows to open and to be securely fastened from the inside. Protect glass panels in windows by bars or heavy mesh screens to prevent easy access. In warm weather, furnish air conditioning capable of maintaining the office at 50 percent relative humidity and a room temperature 20 degrees F below the outside temperature when the outside temperature is 95 degrees F. Any new building erected for a temporary field office must be maintained by the Contractor during the life of the contract and upon completion and acceptance of the work become the property of the Contractor and removed from the site. All charges for telephone service for the temporary field office will be borne by the Contractor, including long distance charges up to a maximum of $75.00 per month.

3.4.9 Security Provisions

Provide adequate outside security lighting at the Contractor's temporary facilities. The Contractor will be responsible for the security of its own equipment; in addition, the Contractor will notify the appropriate law enforcement agency requesting periodic security checks of the temporary project field office.

3.4.10 Storage Size and Location

The open site available for storage must be confined to the indicated operations area.

3.4.11 Storage in Existing Buildings

The Contractor will be working around; the storage of material will be allowed where indicated. Provide 8 foot high security fence with a lockable gate around the storage area. Remove at the completion of work.

3.4.12 Weather Protection of Temporary Facilities and Stored Materials

Take necessary precautions to ensure that roof openings and other critical openings in the building are monitored carefully. Take immediate actions required to seal off such openings when rain or other detrimental weather is imminent, and at the end of each workday. Ensure that the openings are completely sealed off to protect materials and equipment in the building from damage.

3.4.12.1 Building and Site Storm Protection

When a warning of gale force winds is issued, take precautions to minimize danger to persons, and protect the work and nearby Government property. Precautions must include, but are not limited to, closing openings; removing loose materials, tools and equipment from exposed locations; and removing or securing scaffolding and other temporary work. Close openings in the work when storms of lesser intensity pose a threat to the work or any nearby Government property.

3.5 FIELD OFFICE

3.5.1 Quality Control Manager Records and Field Office

Provide on the jobsite an office for the exclusive use of the QC Manager. Provide a weathertight structure with adequate cooling, toilet facilities, lighting, ventilation, a 4 by 8 foot plan table, a standard size office desk and chair, computer station, and working communications facilities. Provide a door with a cylinder lock and windows with locking hardware. Make utility connections. Locate as directed. File quality control records in the office and make available at all times to the Government. After completion of the work, remove the entire structure from the site.

3.5.2 Trailer-Type Mobile Office

The Contractor may, at its option, furnish and maintain a trailer-type mobile office acceptable to the Contracting Officer and providing as a minimum the facilities specified above. Securely anchor the trailer to the ground at all four corners to guard against movement during high winds.

3.6 PLANT COMMUNICATION

Whenever the Contractor has the individual elements of its plant so located that operation by normal voice between these elements is not satisfactory, the Contractor must install a satisfactory means of communication, such as telephone or other suitable devices and made available for use by Government personnel.

3.7 TEMPORARY PROJECT SAFETY FENCING

As soon as practicable, but not later than 15 days after the date established for commencement of work, furnish and erect temporary project safety fencing at the work site. The safety fencing must be a high visibility orange colored, high density polyethylene grid or approved equal, a minimum of 42 inches high, supported and tightly secured to steel posts located on maximum 10 foot centers, constructed at the approved location. Maintain the safety fencing during the life of the contract and, upon completion and acceptance of the work, will become the property of the Contractor and be removed from the work site.

3.8 CLEANUP

Remove construction debris, waste materials, packaging material and the like from the work site daily. Any dirt or mud which is tracked onto paved or surfaced roadways must be cleaned away. Store within the fenced area described above or at the supplemental storage area any materials resulting from demolition activities which are salvageable. Neatly stacked stored materials not in trailers, whether new or salvaged.

3.9 RESTORATION OF STORAGE AREA

Upon completion of the project remove the bulletin board, signs, barricades, haulroads, and any other temporary products from the site. After removal of trailers, materials, and equipment from within the fenced area, remove the fence that will become the property of the Contractor. Restore to the original or better condition, areas used by the Contractor for the storage of equipment or material, or other use. Gravel used to

traverse grassed areas must be removed and the area restored to its original condition, including top soil and seeding as necessary.

-- End of Section --

SECTION 01 57 19.00 20

TEMPORARY ENVIRONMENTAL CONTROLS
11/11

PART 1 GENERAL

1.1 REFERENCES

The publications listed below form a part of this specification to the extent referenced. The publications are referred to within the text by the basic designation only.

U.S. ENVIRONMENTAL PROTECTION AGENCY (EPA)

EPA 530/F-93/004	(1993; Rev O; Updates I, II, IIA, IIB, and III) Test Methods for Evaluating Solid Waste (Vol IA, IB, IC, and II) (SW-846)
EPA 833-R-060-04	(2007) Developing Your Storm Water Pollution Prevention Plan, a Guide for Construction Sites

U.S. NATIONAL ARCHIVES AND RECORDS ADMINISTRATION (NARA)

29 CFR 1910	Occupational Safety and Health Standards
29 CFR 1910.120	Hazardous Waste Operations and Emergency Response
40 CFR 112	Oil Pollution Prevention
40 CFR 112.7	General Requirements for Spill Prevention, Control, and Countermeasure Plans
40 CFR 122.26	Storm Water Discharges (Applicable to State NPDES Programs, see section 123.25)
40 CFR 241	Guidelines for Disposal of Solid Waste
40 CFR 243	Guidelines for the Storage and Collection of Residential, Commercial, and Institutional Solid Waste
40 CFR 258	Subtitle D Landfill Requirements
40 CFR 260	Hazardous Waste Management System: General
40 CFR 261	Identification and Listing of Hazardous Waste
40 CFR 262	Standards Applicable to Generators of Hazardous Waste

40 CFR 263	Standards Applicable to Transporters of Hazardous Waste
40 CFR 264	Standards for Owners and Operators of Hazardous Waste Treatment, Storage, and Disposal Facilities
40 CFR 265	Interim Status Standards for Owners and Operators of Hazardous Waste Treatment, Storage, and Disposal Facilities
40 CFR 266	Standards for the Management of Specific Hazardous Wastes and Specific Types of Hazardous Waste Management Facilities
40 CFR 268	Land Disposal Restrictions
40 CFR 270	EPA Administered Permit Programs: The Hazardous Waste Permit Program
40 CFR 271	Requirements for Authorization of State Hazardous Waste Programs
40 CFR 272	Approved State Hazardous Waste Management Programs
40 CFR 273	Standards For Universal Waste Management
40 CFR 279	Standards for the Management of Used Oil
40 CFR 280	Technical Standards and Corrective Action Requirements for Owners and Operators of Underground Storage Tanks (UST)
40 CFR 300	National Oil and Hazardous Substances Pollution Contingency Plan
40 CFR 355	Emergency Planning and Notification
40 CFR 372-SUBPART D	Specific Toxic Chemical Listings
40 CFR 60	Standards for Performance for New Stationary Sources
40 CFR 63	National Emission Standards for Hazardous Air Pollutants for Source Categories
40 CFR 761	Polychlorinated Biphenyls (PCBs) Manufacturing, Processing, Distribution in Commerce, and Use Prohibitions
40 CFR 82	Protection of Stratospheric Ozone
49 CFR 171	General Information, Regulations, and Definitions

49 CFR 172	Hazardous Materials Table, Special Provisions, Hazardous Materials Communications, Emergency Response Information, and Training Requirements
49 CFR 173	Shippers - General Requirements for Shipments and Packagings
49 CFR 178	Specifications for Packagings

1.2 DEFINITIONS

1.2.1 Sediment

Soil and other debris that have eroded and have been transported by runoff water or wind.

1.2.2 Solid Waste

Garbage, refuse, debris, sludge, or other discharged material, including solid, liquid, semisolid, or contained gaseous materials resulting from domestic, industrial, commercial, mining, or agricultural operations. Types of solid waste typically generated at construction sites may include:

a. Green waste: The vegetative matter from landscaping, land clearing and grubbing, including, but not limited to, grass, bushes, scrubs, small trees and saplings, tree stumps and plant roots. Marketable trees, grasses and plants that are indicated to remain, be re-located, or be re-used are not included.

b. Surplus soil: Existing soil that is in excess of what is required for this work, including aggregates intended, but not used, for on-site mixing of concrete, mortars and paving. Contaminated soil meeting the definition of hazardous material or hazardous waste is not included.

c. Debris: Non-hazardous solid material generated during the construction, demolition, or renovation of a structure which exceeds 2.5 inch particle size that is: a manufactured object; plant or animal matter; or natural geologic material (e.g. cobbles and boulders), broken or removed concrete, masonry, and rock asphalt paving; ceramics; roofing paper and shingles. Inert materials may be reinforced with or contain ferrous wire, rods, accessories and weldments. A mixture of debris and other material such as soil or sludge is also subject to regulation as debris if the mixture is comprised primarily of debris by volume, based on visual inspection.

d. Wood: Dimension and non-dimension lumber, plywood, chipboard, hardboard. Treated and/or painted wood that meets the definition of lead contaminated or lead based contaminated paint is not included.

e. Scrap metal: Scrap and excess ferrous and non-ferrous metals such as reinforcing steel, structural shapes, pipe and wire that are recovered or collected and disposed of as scrap. Scrap metal meeting the definition of hazardous material or hazardous waste is not included.

f. Paint cans: Metal cans that are empty of paints, solvents, thinners and adhesives. If permitted by the paint can label, a thin dry film may remain in the can.

g. Recyclables: Materials, equipment and assemblies such as doors, windows, door and window frames, plumbing fixtures, glazing and mirrors that are recovered and sold as recyclable. Metal meeting the definition of lead contaminated or lead based paint contaminated may not be included as recyclable if sold to a scrap metal company. Paint cans may not be included as recyclable if sold to a scrap metal company.

h. Hazardous Waste: By definition, to be a hazardous waste a material must first meet the definition of a solid waste. Hazardous waste and hazardous debris are special cases of solid waste. They have additional regulatory controls and must be handled separately. They are thus defined separately in this document.

Material not regulated as solid waste are: nuclear source or byproduct materials regulated under the Federal Atomic Energy Act of 1954 as amended; suspended or dissolved materials in domestic sewage effluent or irrigation return flows, or other regulated point source discharges; regulated air emissions; and fluids or wastes associated with natural gas or crude oil exploration or production.

1.2.3 Hazardous Debris

As defined in Solid Waste paragraph, debris that contains listed hazardous waste (either on the debris surface, or in its interstices, such as pore structure) per 40 CFR 261; or debris that exhibits a characteristic of hazardous waste per 40 CFR 261.

1.2.4 Chemical Wastes

This includes salts, acids, alkalizes, herbicides, pesticides, and organic chemicals.

1.2.5 Garbage

Refuse and scraps resulting from preparation, cooking, dispensing, and consumption of food.

1.2.6 Hazardous Waste

Any discarded material, liquid, solid, or gas, which meets the definition of hazardous material or is designated hazardous waste by the Environmental Protection Agency or State Hazardous Control Authority as defined in 40 CFR 260, 40 CFR 261, 40 CFR 262, 40 CFR 263, 40 CFR 264, 40 CFR 265, 40 CFR 266, 40 CFR 268, 40 CFR 270, 40 CFR 271, 40 CFR 272, 40 CFR 273, 40 CFR 279, and 40 CFR 280.

1.2.7 Hazardous Materials

Hazardous materials as defined in 49 CFR 171 and listed in 49 CFR 172.

Hazardous material is any material that:

a. Is regulated as a hazardous material per 49 CFR 173, or

b. Requires a Material Safety Data Sheet (MSDS) per 29 CFR 1910.120, or

c. During end use, treatment, handling, packaging, storage, transpiration, or disposal meets or has components that meet or have potential to meet the definition of a hazardous waste as defined by 40 CFR 261 Subparts A, B, C, or D.

Designation of a material by this definition, when separately regulated or controlled by other instructions or directives, does not eliminate the need for adherence to that hazard-specific guidance which takes precedence over this instruction for "control" purposes. Such material include ammunition, weapons, explosive actuated devices, propellants, pyrotechnics, chemical and biological warfare materials, medical and pharmaceutical supplies, medical waste and infectious materials, bulk fuels, radioactive materials, and other materials such as asbestos, mercury, and polychlorinated biphenyls (PCBs). Nonetheless, the exposure may occur incident to manufacture, storage, use and demilitarization of these items.

1.2.8 Waste Hazardous Material (WHM)

Any waste material which because of its quantity, concentration, or physical, chemical, or infectious characteristics may pose a substantial hazard to human health or the environment and which has been so designated. Used oil not containing any hazardous waste, as defined above, falls under this definition.

1.2.9 Oily Waste

Those materials which are, or were, mixed with used oil and have become separated from that used oil. Oily wastes also means materials, including wastewaters, centrifuge solids, filter residues or sludges, bottom sediments, tank bottoms, and sorbents which have come into contact with and have been contaminated by, used oil and may be appropriately tested and discarded in a manner which is in compliance with other State and local requirements.

This definition includes materials such as oily rags, "kitty litter" sorbent clay and organic sorbent material. These materials may be land filled provided that:

a. It is not prohibited in other State regulations or local ordinances

b. The amount generated is "de minimus" (a small amount)

c. It is the result of minor leaks or spills resulting from normal process operations

d. All free-flowing oil has been removed to the practical extent possible

Large quantities of this material, generated as a result of a major spill or in lieu of proper maintenance of the processing equipment, are a solid waste. As a solid waste, a hazardous waste determination must be performed prior to disposal. As this can be an expensive process, it is recommended that this type of waste be minimized through good housekeeping practices and employee education.

1.2.10 Regulated Waste

Those solid waste that have specific additional Federal, state, or local controls for handling, storage, or disposal.

1.2.11 Class I and II Ozone Depleting Substance (ODS)

Class I ODS is defined in Section 602(a) of The Clean Air Act and includes the following chemicals:

chlorofluorocarbon-11 (CFC-11)
chlorofluorocarbon-12 (CFC-12)
chlorofluorocarbon-13 (CFC-13)
chlorofluorocarbon-111 (CFC-111)
chlorofluorocarbon-112 (CFC-112)
chlorofluorocarbon-113 (CFC-113)
chlorofluorocarbon-114 (CFC-114)
chlorofluorocarbon-115 (CFC-115)
chlorofluorocarbon-211 (CFC-211)
chlorofluorocarbon-212 (CFC-212)
chlorofluorocarbon-213 (CFC-213)
chlorofluorocarbon-214 (CFC-214)
chlorofluorocarbon-215 (CFC-215)
chlorofluorocarbon-216 (CFC-216)
chlorofluorocarbon-217 (CFC-217)
chlorofluorocarbon-500 (CFC-500)
chlorofluorocarbon-502 (CFC-502)
chlorofluorocarbon-503 (CFC-503)
halon-1211
halon-1301
halon-2402
carbon tetrachloride
methyl bromide
methyl chloroform

Class II ODS is defined in Section 602(s) of The Clean Air Act and includes the following chemicals:

hydrochlorofluorocarbon-21 (HCFC-21)
hydrochlorofluorocarbon-22 (HCFC-22)
hydrochlorofluorocarbon-31 (HCFC-31)
hydrochlorofluorocarbon-121 (HCFC-121)
hydrochlorofluorocarbon-122 (HCFC-122)
hydrochlorofluorocarbon-123 (HCFC-123)
hydrochlorofluorocarbon-124 (HCFC-124)
hydrochlorofluorocarbon-131 (HCFC-131)
hydrochlorofluorocarbon-132 (HCFC-132)
hydrochlorofluorocarbon-133 (HCFC-133)
hydrochlorofluorocarbon-141 (HCFC-141)
hydrochlorofluorocarbon-142 (HCFC-142)
hydrochlorofluorocarbon-221 (HCFC-221)
hydrochlorofluorocarbon-222 (HCFC-222)
hydrochlorofluorocarbon-223 (HCFC-223)
hydrochlorofluorocarbon-224 (HCFC-224)
hydrochlorofluorocarbon-225 (HCFC-225)
hydrochlorofluorocarbon-226 (HCFC-226)
hydrochlorofluorocarbon-231 (HCFC-231)
hydrochlorofluorocarbon-232 (HCFC-232)
hydrochlorofluorocarbon-233 (HCFC-233)
hydrochlorofluorocarbon-234 (HCFC-234)
hydrochlorofluorocarbon-235 (HCFC-235)
hydrochlorofluorocarbon-251 (HCFC-251)
hydrochlorofluorocarbon-252 (HCFC-252)
hydrochlorofluorocarbon-253 (HCFC-253)
hydrochlorofluorocarbon-261 (HCFC-261)
hydrochlorofluorocarbon-262 (HCFC-262)
hydrochlorofluorocarbon-271 (HCFC-271)

1.2.12 Universal Waste

The universal waste regulations streamline collection requirements for certain hazardous wastes in the following categories: batteries, pesticides, mercury-containing equipment (e.g., thermostats) and lamps (e.g., fluorescent bulbs). The rule is designed to reduce hazardous waste in the municipal solid waste (MSW) stream by making it easier for universal waste handlers to collect these items and send them for recycling or proper disposal. These regulations can be found at 40 CFR 273.

1.3 SUBMITTALS

Government approval is required for submittals with a "G" designation; submittals not having a "G" designation are for Contractor Quality Control approval. When used, a designation following the "G" designation identifies the office that will review the submittal for the Government. The following shall be submitted in accordance with Section 01 33 00 SUBMITTAL PROCEDURES:

SD-01 Preconstruction Submittals

Preconstruction Survey; G

Solid Waste Management Plan and Permit; G

Regulatory Notifications; G

Environmental Management Plan; G

Storm Water Pollution Prevention Plan; G

Storm Water Notice of Intent (for NPDES coverage under the general permit for construction activities); G

Dirt and Dust Control Plan

Contractor Hazardous Material Inventory Log; G

SD-06 Test Reports

Laboratory Analysis

Disposal Requirements

Erosion and Sediment Control Inspection Reports

Storm Water Inspection Reports for General Permit

Solid Waste Management Report; G

SD-07 Certificates

Contractor 40 CFR employee training records; G

ECATTS certificate of completion

SD-11 Closeout Submittals

Some of the records listed below are also required as part of other submittals. For the "Records" submittal, maintain on-site a separate three-ring Environmental Records binder and submit at the completion of the project. Make separate parts to the binder corresponding to each of the applicable sub items listed below.

Storm Water Pollution Prevention Plan compliance notebook; G

Waste Determination Documentation

Disposal Documentation for Hazardous and Regulated Waste

Contractor 40 CFR Employee Training Records

Solid Waste Management Permit

Solid Waste Management Report

Contractor Hazardous Material Inventory Log; G

Hazardous Waste/Debris Management

Regulatory Notifications

1.4 ENVIRONMENTAL PROTECTION REQUIREMENTS

Provide and maintain, during the life of the contract, environmental protection as defined. Plan for and provide environmental protective measures to control pollution that develops during normal construction practice. Plan for and provide environmental protective measures required to correct conditions that develop during the construction of permanent or temporary environmental features associated with the project. Comply with Federal, State, and local regulations pertaining to the environment, including water, air, solid waste, hazardous waste and substances, oily substances, and noise pollution.

The Contractor may be required to promptly conduct tests and procedures for the purpose of assessing whether construction operations are in compliance with Applicable Environmental Laws. Analytical work shall be done by qualified laboratories; and where required by law, the laboratories shall be certified.

1.4.1 Environmental Compliance Assessment Training and Tracking System (ECATTS)

The QC Manager is responsible for environmental compliance on projects unless an Environmental Manager is named. The QC Manager (and alternative QC Manager) or Environmental Manager shall complete ECATTS training prior to starting respective portions of on-site work under this contract. If personnel changes occur for any of these positions after starting work, replacement personnel shall complete ECATTS training within 14 days of assignment to the project.

Submit an ECATTS certificate of completion for personnel who have completed the required "Environmental Compliance Assessment Training and

Tracking System (ECATTS)" training. This training is web-based and can be accessed from any computer with Internet access using the following instructions.

Register for NAVFAC Environmental Compliance Training and Tracking System, by logging on to http://navfac.ecatts.com/. Obtain the password for registration from the Contracting Officer.

This training has been structured to allow contractor personnel to receive credit under this contract and also to carry forward credit to future contracts. Contractors shall ensure that the QC Manager (and alternate QC Manager) or Environmental Manager review their training plans for new modules or updated training requirements prior to beginning work. Some training modules are tailored for specific State regulatory requirements; therefore, Contractors working in multiple states will be requires to re-take modules tailored to the state where the contract work is being performed.

ECATTS is available for use by all contractor and subcontractor personnel associated with this project. These other personnel are encouraged (but not required) to take the training and may do so at their discretion.

1.4.2 Conformance with the Environmental Management System

Perform work under this contract consistent with the policy and objectives identified in the installation's Environmental Management System (EMS). Perform work in a manner that conforms to objectives and targets, environmental programs and operational controls identified by the EMS. Provide monitoring and measurement information as necessary to address environmental performance relative to environmental, energy, and transportation management goals. In the event an EMS nonconformance or environmental noncompliance associated with the contracted services, tasks, or actions occurs, take corrective and/or preventative actions. In addition, ensure that employees are aware of their roles and responsibilities under the EMS and how these EMS roles and responsibilities affect work performed under the contract.

Ensure that employees receive applicable environmental and occupational health and safety training, and keep up to date on regulatory required specific training for the type of work to be conducted onsite. All on-site Contractor personnel, and their subcontractor personnel, performing tasks that have the potential to cause a significant environmental impact shall be competent on the basis of appropriate education, training or experience. Upon contract award, the Contracting Officer's Representative will notify the installation's EMS coordinator to arrange EMS training. The installation's EMS coordinator will identify training needs associated with environmental aspects and the EMS, and arrange training or take other action to meet these needs. Provide training documentation to the Contracting Officer. The EMS coordinator must retain associated records.

1.5 QUALITY ASSURANCE

1.5.1 Preconstruction Survey

Perform a Preconstruction Survey of the project site with the Contracting Officer, and take photographs showing existing environmental conditions in and adjacent to the site. Submit a report for the record.

1.5.2 Regulatory Notifications

The Contractor is responsible for all regulatory notification requirements in accordance with Federal, State and local regulations. In cases where the Navy must also provide public notification (such as stormwater permitting), the Contractor must coordinate with the Contracting Officer. The Contractor shall submit copies of all regulatory notifications to the Contracting Officer prior to commencement of work activities. Typically, regulatory notifications must be provided for the following (this listing is not all inclusive): demolition, renovation, NPDES defined site work, remediation of controlled substances (asbestos, hazardous waste, lead paint).

1.5.3 Environmental Brief

Attend an environmental brief to be included in the preconstruction meeting. Provide the following information: types, quantities, and use of hazardous materials that will be brought onto the activity; types and quantities of wastes/wastewater that may be generated during the contract. Discuss the results of the Preconstruction Survey at this time.

Prior to initiating any work on site, meet with the Contracting Officer and activity environmental staff to discuss the proposed Environmental Management Plan. Develop a mutual understanding relative to the details of environmental protection, including measures for protecting natural resources, required reports, required permits, permit requirements, and other measures to be taken.

1.5.4 Contractor 40 CFR Employee Training Records

Prepare and maintain employee training records throughout the term of the contract meeting applicable 40 CFR requirements. Submit these training records to the Contracting Officer at the conclusion of the project, unless otherwise directed.

1.6 ENVIRONMENTAL PROTECTION PLAN (EPP)

Prior to initiating any work on site, meet with the Contracting Officer to discuss the proposed Environmental Protection Plan and develop a mutual understanding relative to the details of environmental protection, including measures for protecting natural resources, required reports, and other measures to be taken. The Environmental Protection Plan must incorporate construction related objectives and targets from the installation's Environmental Management System. Submit the Environmental Protection Plan in the following format and include the elements specified below.

a. Description of the Environmental Protection Plan

(1) General overview and purpose

(a) A brief description of each specific plan required by environmental permit or elsewhere in this contract.

(b) The duties and level of authority assigned to the person(s) on the job site that oversee environmental compliance.

(c) A copy of any standard or project specific operating procedures that will be used to effectively manage and protect the environment on the project site.

(d) Communication and training procedures that will be used to convey environmental management requirements to contractor employees and subcontractors.

(e) Emergency contact information contact information (office phone number, cell phone number, and e-mail address).

(2) General site information

b. Management of Natural Resources

(1) Land resources

(2) Tree protection

(3) Replacement of damaged landscape features

(4) Temporary construction

(5) Stream crossings

(6) Fish and wildlife resources

(7) Wetland areas

c. Protection of Historical and Archaeological Resources

(1) Objectives

(2) Methods

d. Storm Water Management and Control

(1) Ground cover

(2) Erodible soils

(3) Temporary measures

(a) Mechanical retardation and control of runoff

(b) Vegetation and mulch

(4) Effective selection, implementation and maintenance of Best Management Practices (BMPs).

e. Protection of the Environment from Waste Derived from Contractor Operations

(1) Control and disposal of solid and sanitary waste. If Section

01 74 19 CONSTRUCTION AND DEMOLITION WASTE MANAGEMENT is included in the contract, submit the plan required by that section as part of the Environmental Protection Plan.

(2) Control and disposal of hazardous waste (Hazardous Waste Management Section)

This item will consist of the management procedures for all hazardous waste to be generated. The elements of those procedures will coincide with the Activity Hazardous Waste Management Plan.A copy of the Activity Hazardous Waste Management Plan will be provided by the Contracting Officer. As a minimum, include the following:

(a) Procedures to be employed to ensure a written waste determination is made for appropriate wastes which are to be generated;

(b) Sampling/analysis plan;

(c) Methods of hazardous waste accumulation/storage (i.e., in tanks and/or containers);

(d) Management procedures for storage, labeling, transportation, and disposal of waste (treatment of waste is not allowed unless specifically noted);

(e) Management procedures and regulatory documentation ensuring disposal of hazardous waste complies with Land Disposal Restrictions (40 CFR 268);

(f) Management procedures for recyclable hazardous materials such as lead-acid batteries, used oil, and the like;

(g) Used oil management procedures in accordance with 40 CFR 279;

(h) Pollution prevention\hazardous waste minimization procedures;

(i) Plans for the disposal of hazardous waste by permitted facilities;

(j) Procedures to be employed to ensure all required employee training records are maintained.

f. Prevention of Releases to the Environment

(1) Procedures to prevent releases to the environment

(2) Notifications in the event of a release to the environment

g. Regulatory Notification and Permits

List what notifications and permit applications must be made. Some permits require up to 90 days to obtain. Demonstrate that those permits have been obtained or applied for by including copies of all applicable, environmental permits. The Plan will not be approved until all permits have been obtained.

h. Clean Air Act Compliance

(1) Identify air pollution generating equipment or processes that may require federal, state, or local permits under the clean air act.

(2) Identify portable and stationary internal combustion engines (ICE's) that will be supplied, utilized or serviced. Address compliance with 40 CFR 60 Subpart IIII, 40 CFR 63 Subpart ZZZZ, and local regulations as applicable. At minimum, include the make, model, serial number, manufacture date, size (engine bhp), and EPA emission certification status of each engine.

(3) Identify management practices to ensure that HVAC work involving refrigerants complies with 40 CFR 82 requirements.

(4) Identify planned air pollution generating processes and management control measures (including but not limited to spray painting, abrasive blasting, demolition, material handling, fugitive dust, and fugitive emissions)

1.6.1 Environmental Protection Plan Review

Within thirty days after the Contract award date, submit the proposed Environmental Protection Plan for review and approval. Commencement of work will not begin until the environmental protection plan has been approved.

1.6.2 Licenses and Permits

Obtain licenses and permits pursuant to the "Permits and Responsibilities" FAR Clause 52.236-7. No permits will be obtained by the Contracting Officer.
Where required by the State regulatory authority, the inspections and certifications will be provided through the services of a Professional Engineer (PE), registered in the State where the work is being performed. Where a PE is not required, the individual must be otherwise qualified by other current State licensure, specific training and prior experience (minimum 5 years). As a part of the quality control plan, which is required to be submitted for approval by the quality control section, provide a sub item containing the name, appropriate professional registration or license number, address, and telephone number of the professionals or other qualified persons who will be performing the inspections and certifications for each permit.

PART 2 PRODUCTS

Not Used

PART 3 EXECUTION

3.1 PROTECTION OF NATURAL RESOURCES

Preserve the natural resources within the project boundaries and outside the limits of permanent work. Restore to an equivalent or improved condition upon completion of work. Confine construction activities to within the limits of the work indicated or specified. If the work is near

streams, lakes, or other waterways, conform to the national permitting requirements of the Clean Water Act.

Do not disturb fish and wildlife. Do not alter water flows or otherwise significantly disturb the native habitat adjacent to the project and critical to the survival of fish and wildlife, except as indicated or specified.

Except in areas to be cleared, do not remove, cut, deface, injure, or destroy trees or shrubs without the Contracting Officer's permission. Do not fasten or attach ropes, cables, or guys to existing nearby trees for anchorages unless authorized by the Contracting Officer. Where such use of attached ropes, cables, or guys is authorized, the Contractor will be responsible for any resultant damage.

Protect existing trees which are to remain and which may be injured, bruised, defaced, or otherwise damaged by construction operations. Remove displaced rocks from uncleared areas. By approved excavation, remove trees with 30 percent or more of their root systems destroyed. Remove trees and other landscape features scarred or damaged by equipment operations, and replace with equivalent, undamaged trees and landscape features. Obtain Contracting Officer's approval before replacement.

The Contracting Officer's approval is required before any equipment will be permitted to ford live streams. In areas where frequent crossings are required, install temporary culverts or bridges. Obtain Contracting Officer's approval prior to installation. Remove temporary culverts or bridges upon completion of work, and repair the area to its original condition unless otherwise required by the Contracting Officer.

3.1.1 Erosion and Sediment Control Measures

3.1.1.1 Burnoff

Burnoff of the ground cover is not permitted.

3.1.1.2 Protection of Erodible Soils

Immediately finish the earthwork brought to a final grade, as indicated or specified. Immediately protect the side slopes and back slopes upon completion of rough grading. Plan and conduct earthwork to minimize the duration of exposure of unprotected soils.

3.1.1.3 Temporary Protection of Erodible Soils

Use the following methods to prevent erosion and control sedimentation:

a. Mechanical Retardation and Control of Runoff

Mechanically retard and control the rate of runoff from the construction site. This includes construction of diversion ditches, benches, berms, and use of silt fences and straw bales to retard and divert runoff to protected drainage courses.

b. Sediment Basins

(1) Trap sediment in temporary or permanent (when available) sediment basins. Select a basin size to accommodate the runoff of a local 10-year storm. Pump dry and remove the accumulated sediment, after each storm. Use a paved weir or vertical overflow pipe for overflow. Remove collected sediment from the site. Institute effluent quality monitoring programs.

(2) Install, inspect, and maintain best management practices (BMPs) as required by the general permit. Prepare BMP Inspection Reports as required by the general permit. If required by the permit, include those inspection reports.

c. Vegetation and Mulch

(1) Provide temporary protection on sides and back slopes as soon as rough grading is completed or sufficient soil is exposed to require erosion protection. Protect slopes by accelerated growth of permanent vegetation, temporary vegetation, mulching, or netting. Stabilize slopes by hydroseeding, anchoring mulch in place, covering with anchored netting, sodding, or such combination of these and other methods necessary for effective erosion control.

(2) Seeding: Provide new seeding where ground is disturbed. Include topsoil or nutriment during the seeding operation necessary to establish or reestablish a suitable stand of grass.

3.1.2 Erosion and Sediment Control Inspection Reports

Submit "Erosion and Sediment Control Inspection Reports" (E&S) (form provided at the pre-construction conference) and Storm Water Inspection Reports for General Permit for General Permit to the Contracting Officer once every 7 calendar days and within 24 hours of a storm event that produces 0.5 inch or more of rain.

Note erosion control inspection reports may be compiled as part of a stormwater pollution prevention plan inspection reports if applicable.

3.1.2.1 Storm Water Notice of Intent for Construction Activities and Storm Water Pollution Prevention Plan

Submit a Storm Water Notice of Intent (for NPDES coverage under the general permit for construction activities) and a Storm Water Pollution Prevention Plan (SWPPP) for the project to the Contracting Officer prior and gain approval prior to the commencement of work. The SWPPP will meet the requirements of the EPA or State general permit for storm water discharges from construction sites. Submit the SWPPP along with any required Notice of Intents, Notice of Termination, and appropriate permit fees, via the Contracting Officer, to the appropriate Federal or State agency for approval, a minimum of 14 calendar days prior to the start of any land disturbing activities. The Contractor shall maintain an approved copy of the SWPPP at the construction on-site office, and continually update as regulations require, reflecting current site conditions.

Coverage under this permit requires the contractor prepare a Storm Water Pollution Prevention Plan (SWPPP), prepare and submit a Registration Statement as a co-permittee with the Construction Officer, and provide the permit fee to the responsible state agency before any land disturbing

activities begin. The contractor shall file for permit coverage on behalf Construction Officer and himself and file a Notice of Termination once construction is complete and the site is stabilized with a final sustainable cover.

Under the terms and conditions of the permit, the Contractor may be required to install, inspect, maintain best management practices (BMPs), and submit stormwater BMP inspection reports and stormwater pollution prevention plan inspection reports. The Contractor shall ensure construction operations and management are constantly in compliance with the terms and conditions of the general permit for storm water discharges from construction activities.

a. The SWPPP shall:

(1) Identify potential sources of pollution which may be reasonably expected to affect the quality of storm water discharge from the site.

(2) Describe and ensure implementation of practices which will be used to reduce the pollutants in storm water discharge from the site.

(3) Ensure compliance with terms of the EPA or State general permit for storm water discharge.

(4) Select applicable best management practices from EPA 833-R-060-04.

(5) Include a completed copy of the Registration Statement, BMP Inspection Report Template and Notice of Termination except for the effective date.

(6) Storm Water Pollution Prevention Measures and Notice of Intent 40 CFR 122.26, EPA 833-R-060-04. Provide a "Storm Water Pollution Prevention Plan" (SWPPP) for the project. The SWPPP will meet the requirements of the EPA or State general permit for storm water discharges from construction sites. Submit the SWPPP along with any required Notice of Intents, Notice of Termination, and appropriate permit fees, via the Contracting Officer, to the appropriate Federal or State agency for approval, a minimum of 14 calendar days prior to the start of construction. A copy of the approved SWPPP will be kept at the construction on-site office, and continually updated as regulations require reflecting current site conditions.

3.1.2.2 Storm Water Pollution Prevention Plan Compliance Notebook

Create and maintain a three binder of documents that demonstrate compliance with the Stormwater Construction Activity permit. The binder shall include a copy of the permit Registration Statement, proof of permit fee payment, SWPPP and SWPPP update amendments, inspection reports, copies of correspondence with the Guam Environmental Protection Agency (GEPA) and a copy of the permit Notice of Termination. At the completion of the project the folder shall become the property of the Government. The compliance notebook shall be provided to Contracting Officer. An advance copy of the Registration Statement shall be provided to the Contracting Officer immediately after the form is presented to the permitting agency.

3.1.3 Stormwater Drainage and Construction Dewatering

There will be no discharge of excavation ground water to the sanitary sewer, storm drains, or to the river without prior specific authorization of the Environmental Division in writing. Discharge of hazardous substances will not be permitted under any circumstances.

Construction site runoff will be prevented from entering any storm drain or the river directly by the use of straw bales or other method suitable to the Environmental Division. Contractor will provide erosion protection of the surrounding soils.

Construction Dewatering shall not be discharged to the sanitary sewer. If the construction dewatering is noted or suspected of being contaminated, it may only be released to the storm drain system if the discharge is specifically permitted. Authorization for any contaminated groundwater release shall be obtained in advance from the base Environmental Officer. Discharge of hazardous substances will not be permitted under any circumstances.

3.2 HISTORICAL AND ARCHAEOLOGICAL RESOURCES

Carefully protect in-place and report immediately to the Contracting Officer historical and archaeological items or human skeletal remains discovered in the course of work. Upon discovery, notify the Contracting Officer. Stop work in the immediate area of the discovery until directed by the Contracting Officer to resume work. The Government retains ownership and control over historical and archaeological resources.

3.3 SOLID WASTE MANAGEMENT PLAN and PERMIT

Provide to the contracting officer written notification of the quantity of solid waste/debris that is anticipated to be generated by construction. Include in the report the locations where various types of waste will be disposed or recycled. Include letters of acceptance or as applicable, submit one copy of a State and local Solid Waste Management Permit or license showing such agency's approval of the disposal plan before transporting wastes off Government property.

3.3.1 Solid Waste Management Report

Monthly, submit a solid waste disposal report to the Contracting Officer. For each waste, the report will state the classification (using the definitions provided in this section), amount, location, and name of the business receiving the solid waste.

Include copies of the waste handling facilities' weight tickets, receipts, bills of sale, and other sales documentation. In lieu of sales documentation, the Contractor may submit a statement indicating the disposal location for the solid waste which is signed by an officer of the Contractor firm authorized to legally obligate or bind the firm. The sales documentation or Contractor certification will include the receiver's tax identification number and business, EPA or State registration number, along with the receiver's delivery and business addresses and telephone numbers. For each solid waste retained by the Contractor for his own use, the Contractor will submit on the solid waste disposal report the information previously described in this paragraph. Prices paid or

received will not be reported to the Contracting Officer unless required by other provisions or specifications of this Contract or public law.

3.3.2 Control and Management of Solid Wastes

Pick up solid wastes, and place in covered containers which are regularly emptied. Do not prepare or cook food on the project site. Prevent contamination of the site or other areas when handling and disposing of wastes. At project completion, leave the areas clean. Recycling is encouraged and can be coordinated with the Contracting Officer and the activity recycling coordinator. Remove all solid waste (including non-hazardous debris) from Government property and dispose off-site at an approved landfill. Solid waste disposal off-site must comply with most stringent local, State, and Federal requirements including 40 CFR 241, 40 CFR 243, and 40 CFR 258.

Manage spent hazardous material used in construction, including but not limited to, aerosol cans, waste paint, cleaning solvents, contaminated brushes, and used rags, as per environmental law.

3.3.2.1 Disposal Documentation for Hazardous and Regulated Waste

Manifest, pack, ship and dispose of hazardous or toxic waste and universal waste that is generated as a result of construction in accordance with the generating facilities generator status under the Recourse Conservation and Recovery Act. Contact the Contracting Officer for the facility RCRA identification number that is to be used on each manifest.

Submit a copy of the applicable EPA and or State permit(s), manifest(s), or license(s) for transportation, treatment, storage, and disposal of hazardous and regulated waste by permitted facilities. Hazardous or toxic waste manifest must be reviewed, signed, and approved by the Navy before the Contractor may ship waste. To obtain specific disposal instructions coordinate with the Activity Environmental office.

3.3.2.2 Government Dumps

Government dumps within the station and NAVFACMAR Landfill is available for disposal of rubbish, debris, and asbestos materials, except for metals, rubber products, chemicals, and hazardous waste. For dumping rubbish and debris into prepared hole, Contractor will be charged the current rate of $34.11 per ton. This rate is subject to change and is provided for informational purposes. Aside from the dumping charges mentioned, the Contractor will be charged for excavation and backfilling of holes to be performed by Government personnel.

3.3.2.3 Asbestos Containing Materials

Environmental Service Department (671-339-3711) approval is required. The Contractor will be charged the current flat rate of $2,350.00 per ton. This rate includes all work associated with landfill excavation, dumping, backfilling, and disposal fees. The rate is subject to change and is provided for informational purposes. Prior to dumping of waste, Contractor shall establish a funding account with NAVFACMAR Comptroller (671-333-8299).

3.3.2.4 NAVFACMAR Landfill

Hours of operation are Monday through Friday, 7:30 a.m. to 4:30 p.m. Coordinate with the Contracting Officer and Landfill Supervisor (671-333-6189) or Operation Division Director (671-333-2936) 24 hours prior to delivery of the first load. Additional loads thereafter do not require advance notification, except for the Contracting Officer's approval prior to first delivery. Loads will be inspected at the landfill gate, and if approved, the Landfill Supervisor will direct the Contractor's truck to the disposal site.

3.3.2.5 Metals

Metal products will not be accepted at the NAVFACMAR landfill. Contractor shall remove metals from the construction waste and dispose of the metals by recycling through DRMO, local scrap dealer, or disposal off-island. The Contractor shall identify the selected method and site of metal waste disposal in the Environmental Protection Plan.

3.3.2.6 Chemical Waste

Dispose of chemical waste in accordance with local and federal regulations.

3.4 WASTE DETERMINATION DOCUMENTATION

Complete a Waste Determination form (provided at the pre-construction conference) for all contractor derived wastes to be generated. Base the waste determination upon either a constituent listing from the manufacturer used in conjunction with consideration of the process by which the waste was generated, EPA approved analytical data, or laboratory analysis (Material Safety Data Sheets (MSDS) by themselves are not adequate). Attach all support documentation to the Waste Determination form. As a minimum, a Waste Determination form must be provided for the following wastes (this listing is not all inclusive): oil and latex based painting and caulking products, solvents, adhesives, aerosols, petroleum products, and all containers of the original materials.

3.5 POLLUTION PREVENTION/HAZARDOUS WASTE MINIMIZATION

Minimize the use of hazardous materials and the generation of hazardous waste. Include procedures for pollution prevention/ hazardous waste minimization in the Hazardous Waste Management Section of the Environmental Management Plan. Consult with the activity Environmental Office for suggestions and to obtain a copy of the installation's pollution prevention/hazardous waste minimization plan for reference material when preparing this part of the plan. If no written plan exists, obtain information by contacting the Contracting Officer. Describe the types of the hazardous materials expected to be used in the construction when requesting information.

3.6 WHM/HW MATERIALS PROHIBITION

No waste hazardous material or hazardous waste shall be disposed of on government property. No hazardous material shall be brought onto government property that does not directly relate to requirements for the performance of this contract. The government is not responsible for disposal of Contractor's waste material brought on the job site and not

required in the performance of this contract. The intent of this provision is to dispose of that waste identified as waste hazardous material/hazardous waste as defined herein that was generated as part of this contract and existed within the boundary of the Contract limits and not brought in from offsite by the Contractor. Incidental materials used to support the contract including, but not limited to aerosol cans, waste paint, cleaning solvents, contaminated brushes, rags, clothing, etc. are the responsibility of the Contractor. The list is illustrative rather than inclusive. The Contractor is not authorized to discharge any materials to sanitary sewer, storm drain, or to the river or conduct waste treatment or disposal on government property without written approval of the Contracting Officer.

3.7 HAZARDOUS MATERIAL MANAGEMENT

No hazardous material shall be brought onto government property that does not directly relate to requirements for the performance of this contract.

Include hazardous material control procedures in the Safety Plan. Address procedures and proper handling of hazardous materials, including the appropriate transportation requirements. Submit a MSDS and estimated quantities to be used for each hazardous material to the Contracting Officer prior to bringing the material on base. Typical materials requiring MSDS and quantity reporting include, but are not limited to, oil and latex based painting and caulking products, solvents, adhesives, aerosol, and petroleum products. At the end of the project, provide the Contracting Officer with the maximum quantity of each material that was present at the site at any one time, the dates the material was present, the amount of each material that was used during the project, and how the material was used. Ensure that hazardous materials are utilized in a manner that will minimize the amount of hazardous waste that is generated. Ensure that all containers of hazardous materials have NFPA labels or their equivalent. Keep copies of the MSDS for hazardous materials on site at all times and provide them to the Contracting Officer at the end of the project. Certify that all hazardous materials removed from the site are hazardous materials and do not meet the definition of hazardous waste per 40 CFR 261.

3.7.1 Contractor Hazardous Material Inventory Log

Submit the "Contractor Hazardous Material Inventory Log"(found at: http://www.wbdg.org/ccb/NAVGRAPH/graphtoc.pdf), which provides information required by (EPCRA Sections 312 and 313) along with corresponding Material Safety Data Sheets (MSDS), to the Contracting Officer at the start and at the end of construction (30 days from final acceptance), and update no later than January 31 of each calendar year during the life of the contract. Keep copies of the MSDS for hazardous materials on site at all times. At the end of the project, provide the Contracting Officer with copies of all of these MSDS, and the maximum quantity of each material that was present at the site at any one time, the dates the material was present, the amount of each material that was used during the project, and how the material was used.

Documentation for any spills/releases, environmental reports or off-site transfers may be requested by the Contracting Officer.

3.8 PETROLEUM PRODUCTS AND REFUELING

Conduct the fueling and lubricating of equipment and motor vehicles in a manner that protects against spills and evaporation. Manage all used oil generated on site in accordance with 40 CFR 279. Determine if any used oil generated while on-site exhibits a characteristic of hazardous waste. Used oil containing 1000 parts per million of solvents will be considered a hazardous waste and disposed of at Contractor's expense. Used oil mixed with a hazardous waste will also be considered a hazardous waste.

3.8.1 Oily and Hazardous Substances

Prevent oil or hazardous substances from entering the ground, drainage areas, or navigable waters. In accordance with 40 CFR 112, surround all temporary fuel oil or petroleum storage tanks with a temporary berm or containment of sufficient size and strength to contain the contents of the tanks, plus 10 percent freeboard for precipitation. The berm will be impervious to oil for 72 hours and be constructed so that any discharge will not permeate, drain, infiltrate, or otherwise escape before cleanup occurs. Provide general secondary containment for oil transfer operations as required by 40 CFR 112.7.

3.8.2 Inadvertent Discovery of Petroleum Contaminated Soil or Hazardous Wastes

If petroleum contaminated soil or suspected hazardous waste is found during construction that was not identified in the contract documents, the contractor shall immediately notify the contracting officer. The contractor shall not disturb this material until authorized by the contracting officer.

3.9 FUEL TANKS

Petroleum products and lubricants required to sustain up to 30 days of construction activity may be kept on site. Storage and refilling practices shall comply with 40 CFR Part 112. Secondary containment shall be provided and be no less than 110 percent of the tank volume plus five inches of free-board. If a secondary berm is used for containment then the berm shall be impervious to oil for 72 hours and be constructed so that any discharge will not permeate, drain, infiltrate, or otherwise escape before cleanup occurs. Drips pans are required and the tanks must be covered during inclement weather.

3.10 RELEASES/SPILLS OF OIL AND HAZARDOUS SUBSTANCES

Exercise due diligence to prevent, contain, and respond to spills of hazardous material, hazardous substances, hazardous waste, sewage, regulated gas, petroleum, lubrication oil, and other substances regulated by environmental law. Maintain spill cleanup equipment and materials at the work site. In the event of a spill, take prompt, effective action to stop, contain, curtail, or otherwise limit the amount, duration, and severity of the spill/release. In the event of any releases of oil and hazardous substances, chemicals, or gases; immediately (within 15 minutes) notify the Base or Activity Fire Department, the activity's Command Duty Officer, and the Contracting Officer. If the contractor's response is inadequate, the Navy may respond. If this should occur, the contractor

will be required to reimburse the government for spill response assistance and analysis.

The Contractor is responsible for verbal and written notifications as required by the federal 40 CFR 355, State, local regulations and Navy Instructions. Spill response will be in accordance with 40 CFR 300 and applicable State and local regulations. Contain and clean up these spills without cost to the Government. If Government assistance is requested or required, the Contractor will reimburse the Government for such assistance. Provide copies of the written notification and documentation that a verbal notification was made within 20 days.

Maintain spill cleanup equipment and materials at the work site. Clean up all hazardous and non-hazardous (WHM) waste spills. The Contractor shall reimburse the government for all material, equipment, and clothing generated during any spill cleanup. The Contractor shall reimburse the government for all costs incurred including sample analysis materials, equipment, and labor if the government must initiate its own spill cleanup procedures, for Contractor responsible spills, when:

a. The Contractor has not begun spill cleanup procedure within one hour of spill discovery/occurrence, or

b. If, in the government's judgment, the Contractor's spill cleanup is not adequately abating life threatening situation and/or is a threat to any body of water or environmentally sensitive areas.

3.11 CONTROL AND MANAGEMENT OF ASBESTOS CONTAINING MATERIAL (ACM)

Items, components, or materials disturbed by or included in work under this contract may involve asbestos. Other materials in the general area around where work will be performed may contain asbestos. All thermal insulation, in all work areas, should be considered to be asbestos unless positively identified by conspicuous tags or previous laboratory analysis certifying them as asbestos free.

Inadvertent discovery of non-disclosed asbestos that will result in an abatement action requires a change in scope before proceeding. Upon discovery of asbestos containing material not identified in the contract documents, the Contractor shall immediately stop all work that would generate further damage to the material, evacuate the asbestos exposed area, and notify the Contracting Officer for resolution of the situation prior to resuming normal work activities in the affected area. Do not remove or perform work on any asbestos containing materials without the prior approval of the Contracting Officer. Do not engage in any activity, which would remove or damage such materials or cause the generation of fibers from such materials.

Manage and dispose of asbestos containing waste in accordance with applicable environmental law. Asbestos containing waste shall be manifested and the manifest provided to the Contracting Officer.

3.12 CONTROL AND MANAGEMENT OF HAZARDOUS WASTES

3.12.1 Facility Hazardous Waste Generator Status

Joint Region Marianas is designated as a Large Quantity Generator. All work conducted within the boundaries of this activity must meet the regulatory requirements of this generator designation. The Contractor will comply with all provisions of Federal, State and local regulatory requirements applicable to this generator status regarding training and storage, handling, and disposal of all construction derived wastes.

3.12.2 Hazardous Waste/Debris Management

Identify all construction activities which will generate hazardous waste/debris. Provide a documented waste determination for all resultant waste streams. Hazardous waste/debris will be identified, labeled, handled, stored, and disposed of in accordance with all Federal, State, and local regulations including 40 CFR 261, 40 CFR 262, 40 CFR 263, 40 CFR 264, 40 CFR 265, 40 CFR 266, and 40 CFR 268.

Hazardous waste will also be managed in accordance with the approved Hazardous Waste Management Section of the Environmental Protection Plan. Store hazardous wastes in approved containers in accordance with 49 CFR 173 and 49 CFR 178. Hazardous waste generated within the confines of Government facilities will be identified as being generated by the Government.

Prior to removal of any hazardous waste from Government property, all hazardous waste manifests must be signed by activity personnel from the Station Environmental Office. No hazardous waste will be brought onto Government property. Provide to the Contracting Officer a copy of waste determination documentation for any solid waste streams that have any potential to be hazardous waste or contain any chemical constituents listed in 40 CFR 372-SUBPART D. For hazardous wastes spills, verbally notify the Contracting Officer immediately.

3.12.2.1 Regulated Waste Storage/Satellite Accumulation/90 Day Storage Areas

If the work requires the temporary storage/collection of regulated or hazardous wastes, the Contractor will request the establishment of a Regulated Waste Storage Area, a Satellite Accumulation Area, or a 90 Day Storage Area at the point of generation. The Contractor must submit a request in writing to the Contracting Officer providing the following information:

Contract Number	_____	Contractor	_____
Haz/Waste or Regulated Waste POC	_____	Phone Number	_____
Type of Waste	_____	Source of Waste	_____
Emergency POC	_____	Phone Number	_____

Location of the Site: _____

(Attach Site Plan to the Request)

Attach a waste determination form. Allow ten working days for processing this request. The designated area where waste is being stored shall be barricaded and a sign identifying as follows:

"DANGER - UNAUTHORIZED PERSONNEL KEEP OUT"

3.12.2.2 Sampling and Analysis of HW

a. Waste Sampling

Sample waste in accordance with EPA 530/F-93/004. Each sampled drum or container will be clearly marked with the Contractor's identification number and cross referenced to the chemical analysis performed.

b. Laboratory Analysis

Follow the analytical procedure and methods in accordance with the 40 CFR 261. The Contractor will provide all analytical results and reports performed to the Contracting Officer

c. Analysis Type

Identify waste hazardous material/hazardous waste by analyzing for the following properties as a minimum: ignitability, corrosiveness, total chlorides, BTU value, PCBs, TCLP for heavy metals, and cyanide.

3.12.2.3 Hazardous Waste Disposal

No hazardous, toxic, or universal waste shall be disposed or hazardous material abandoned on government property. And unless otherwise other wise noted in this contract, the government is not responsible for disposal of Contractor generated waste material. The disposal of incidental materials used to accomplish the work including, but not limited to aerosol cans, waste paint, cleaning solvents, contaminated brushes, rags, clothing, etc. are the responsibility of the Contractor. The list is illustrative rather than inclusive.

The Contractor is not authorized to discharge any materials to sanitary sewer, storm drain, or water way or conduct waste treatment or disposal on government property without written approval of the Contracting Officer.

Control of stored waste, packaging, sampling, analysis, and disposal will be determined by the details in the contract. The requirements for jobs in the following paragraphs will be used as the guidelines for disposal of any hazardous waste generated.

a. Responsibilities for Contractor's Disposal

Contractor responsibilities include any generation of WHM/HW requiring Contractor disposal of solid waste or liquid.

(1) The Contractor agrees to provide all service necessary for the final treatment/disposal of the hazardous material/waste in accordance with all local, State and Federal laws and regulations, and the terms and conditions of the contract within sixty (60) days after the materials have been generated. These services will include all necessary

personnel, labor, transportation, packaging, detailed analysis (if required for disposal, and/or transportation, including manifesting or completing waste profile sheets, equipment, and the compilation of all documentation is required).

(2) Contain all waste in accordance with 40 CFR 260, 40 CFR 261, 40 CFR 262, 40 CFR 263, 40 CFR 264, 40 CFR 265, 40 CFR 266, 40 CFR 268, 40 CFR 270, 40 CFR 272, 40 CFR 273, 40 CFR 279, 40 CFR 280, and 40 CFR 761.

(3) Obtain a representative sample of the material generated for each job done to provide waste stream determination.

(4) Analyze each sample taken and provide analytical results to the Contracting Officer. Provide two copies of the results.

(5) Determine the DOT proper shipping names for all waste (each container requiring disposal) and will demonstrate how this determination is developed and supported by the sampling and analysis requirements contained herein to the Contracting Officer.

Contractor Disposal Turn-In Requirements

For any waste hazardous materials or hazardous waste generated which requires the Contractor to dispose of, the following conditions must be complied with in order to be acceptable for disposal:

(1) Drums compatible with waste contents and drums meet DOT requirements for 49 CFR 173 for transportation of materials.

(2) Drums banded to wooden pallets. No more than three (3) 55 gallon drums to a pallet, or two (2) 85 gallon over packs.

(3) Band using 1-1/4 inch minimum band on upper third of drum.

(4) Recovery materials label (provided by Code 106.321) located in middle of drum, filled out to indicate actual volume of material, name of material manufacturer, other vendor information as available.

(5) Always have three (3) to five (5) inches of empty space above volume of material. This space is called 'outage'.

3.12.2.4 Universal Waste/e-Waste Management

Universal waste including but not limited to some mercury containing building products such florescent lamps, mercury vapor lamps, high pressure sodium lamps, CRTs, batteries, aerosol paint containers, electrical equipment containing PCBs, and consumed electronic devices, shall be managed in accordance with applicable environmental law and installation instructions.

3.12.3 Class I and II ODS Prohibition

Class I and II ODS in pure or blended form as defined and identified herein must not be used in the performance of this contract, nor be provided as part of the equipment except for the use of servicing existing

government owned equipment. This prohibition will be considered to prevail over any other provision, specification, drawing, or referenced documents.

3.12.3.1 Recycling Requirements

Recycle used refrigerants and ozone depleting substances generated during the performance of this contract to the maximum extent practicable to minimize used refrigerant and ozone depleting substance disposal as HW.

Test, collect, transfer, recycle, and/or arrange for shipping and proper disposal of used refrigerants and ozone depleting substances generated during the performance of work under this contract. The Contractor is responsible for all associated costs.

Any and all Class I ODS and R-22 recovered by the Contractor as part of this contract shall be packaged and turned over to the Government for recycling upon the completion of the work covered by this contract. The Contractor shall arrange for recycling of used refrigerants not turned over to the government, at a licensed refrigerant recycler approved by the Contracting Officer.

3.12.3.2 EPA Certification Requirements

Heating and air conditioning technicians must be certified through an EPA-approved program. Copies of certifications shall be maintained at the employees' place of business and be carried as a wallet card by the technician, as provided by environmental law.

3.12.3.3 Accidental Venting of Refrigerant

Accidental venting of a refrigerant is a release and must be reported to the Contracting Officer

3.13 DUST CONTROL

Keep dust down at all times, including during nonworking periods. Sprinkle or treat, with dust suppressants, the soil at the site, haul roads, and other areas disturbed by operations. Dry power brooming will not be permitted. Instead, use vacuuming, wet mopping, wet sweeping, or wet power brooming. Air blowing will be permitted only for cleaning nonparticulate debris such as steel reinforcing bars. Only wet cutting will be permitted for cutting concrete blocks, concrete, and bituminous concrete. Do not unnecessarily shake bags of cement, concrete mortar, or plaster.

3.13.1 Dirt and Dust Control Plan

Submit truck and material haul routes along with a plan for controlling dirt, debris, and dust on base roadways. As a minimum, identify in the plan the subcontractor and equipment for cleaning along the haul route and measures to reduce dirt, dust, and debris from roadways.

3.14 ABRASIVE BLASTING

3.14.1 Blasting Operations

The use of silica sand is prohibited in sandblasting. Provide tarpaulin drop cloths and windscreens to enclose abrasive blasting operations to

confine and collect dust, abrasive, agent, paint chips, and other debris in accordance with the requirements specified. Perform work involving removal of hazardous material in accordance with 29 CFR 1910.

3.14.2 Disposal Requirements

Submit analytical results of the debris generated from abrasive blasting operations per paragraph entitled Laboratory Analysis of this section. Hazardous waste generated from blasting operations will be managed in accordance with paragraph entitled "Hazardous Waste\Debris Management" of this section and with the approved HWMP. Disposal of non-hazardous abrasive blasting debris will be in accordance with paragraph entitled, "Control and Disposal of Solid Wastes".

3.15 NOISE

Make the maximum use of low-noise emission products, as certified by the EPA. Blasting or use of explosives will not be permitted without written permission from the Contracting Officer, and then only during the designated times. Confine pile-driving operations to the period between 8 a.m. and 4 p.m., Monday through Friday, exclusive of holidays, unless otherwise specified.

3.16 MERCURY MATERIALS

Mercury is prohibited in the construction of this facility, unless specified otherwise, and with the exception of mercury vapor lamps and fluorescent lamps. Dumping of mercury-containing materials and devices such as mercury vapor lamps, fluorescent lamps, and mercury switches, in rubbish containers is prohibited. Remove without breaking, pack to prevent breakage, and transport out of the activity in an unbroken condition for disposal as directed. Immediately report to the Environmental Office and the Contracting Officer instances of breakage or mercury spillage. Clean mercury spill area to the satisfaction of the Contracting Officer.

Cleanup of a mercury spill shall not be recycled and shall be managed as a hazardous waste for disposal.

-- End of Section --

SECTION 01 58 00

PROJECT IDENTIFICATION
08/09

PART 1 GENERAL

1.1 REFERENCES

The publications listed below form a part of this specification to the extent referenced. The publications are referred to within the text by the basic designation only.

AMERICAN WOOD PROTECTION ASSOCIATION (AWPA)

AWPA C1	(2003) All Timber Products – Preservative Treatment by Pressure Processes
AWPA C2	(2003) Lumber, Timber, Bridge Ties and Mine Ties - Preservative Treatment by Pressure Processes

U.S. ARMY CORPS OF ENGINEERS (USACE)

EP 310-1-6a	(2006) Sign Standards Manual, VOL 1
EP 310-1-6b	(2006) Sign Standards Manual, VOL 2, Appendices

1.2 SUBMITTALS

Government approval is required for submittals with a "G" designation; submittals not having a "G" designation are for Contractor Quality Control approval. When used, a designation following the "G" designation identifies the office that will review the submittal for the Government. The following shall be submitted in accordance with Section 01 33 00 SUBMITTAL PROCEDURES:

SD-02 Shop Drawings

Preliminary drawing indicating layout and text content; G

Sign Legend Orders; G

1.3 PROJECT SIGN

Prior to initiating any work on site, provide one project identification sign at the location designated. Construct the sign in accordance with project sign detail attached at the end of this section. Maintain sign throughout the life of the project. Upon completion of the project, remove the sign from the site. Applicable to significant projects greater than $1,000,000 that are located in an area visible to large numbers of people; will provide visual construction activities; will be of sufficient size and scope; or of high interest to the using activity.

1.3.1 Project Identification Signboard (Navy)

A project identification signboard shall be provided in accordance with attached Plates 2, 3, 4 and 5. Provide preliminary drawing indicating layout and text content. The signboard shall be provided at a conspicuous location on the job site where directed by the Contracting Officer.

a. The field of the sign shall consist of a 4 by 8 foot sheet of grade B-B medium density overlaid exterior plywood.

b. Lumber shall be B or better Southern pine, pressure-preservative treated in accordance with AWPA C1 and AWPA C2. Nails shall be aluminum or galvanized steel.

c. The entire signboard and supports shall be given one coat of exterior alkyd primer and two coats of exterior alkyd enamel paint. The lettering and sign work shall be performed by a skilled sign painter using paint known in the trade as bulletin colors. The colors, lettering sizes, and lettering styles shall be as indicated. Where preservative-treated lumber is required, utilize only cured pressure-treated wood which has had the chemicals leached from the surface of the wood prior to painting.

d. Use spray applied automotive quality high gloss acrylic white enamel paint as background for the NAVFAC logo. NAVFAC logo shall be an applied 2 millimeter film sticker/decal with either transparent or white background or paint the logo by stencil onto the sign. The weather resistant sticker/decal film shall be rated for a minimum of 2-year exterior vertical exposure. The self-adhering sticker shall be mounted to the sign with pressure sensitive, permanent acrylic adhesive. Shop cut sticker/decal to rectangular shape and provide pull-off backing sheet on adhesive side of design sticker for shipping.

e. Sign paint colors (manufacturer's numbers/types listed below for color identification only)

(1) Blue = To match dark blue color in the NAVFAC logo.

(2) White = To match Brilliant White color in the NAVFAC logo.

f. NAVFAC logo must retain proportions and design integrity. NAVFAC logos in electronic format may be obtained from the NAVFAC web portal via the following link: https://portal.navfac.navy.mil/portal/page?_pageid=181,3465071&_dad=portal&_schema=p Use the following to choose color values for the paint to be used:

(1) Dark Blue = equivalent to CMYK values 100, 72, 0, 8.

(2) Light Blue = equivalent to CMYK values 69, 34, 0, 0.

(3) Cyan = equivalent to CMYK values 100, 9, 0, 6.

(4) Yellow = equivalent to CMYK values 0.9,94, 0.

1.3.2 Project Signboard (Air Force)

Furnish the sign, maintain the sign during construction, and remove the sign from the job site upon completion of the project. Details of sign graphics and construction are indicated in Plates 6 and 7 of sketches attached to this section.

The 18 inch maximum width and height for Air Force and rectangular height for NAVFAC applied stickers shall be created in the design indicated, and printed on a 2 millimeter transparent film. The weather resistant, self adhering film shall be rated for a minimum of 2 year exterior vertical exposure and be mounted to sign with pressure sensitive, permanent acrylic adhesive. Shop cut sticker to square shape and provide pull-off backing sheet on adhesive side of sticker for shipping.

Move the "PLANNED COMPLETION DATE" to the sign left edge and add to the sign right side "EMERGENCY RESPONSE (ERP) COORDINATES:. These coordinates, which are used to locate base emergencies, will be provided by the ROICC.

On the project sign, list two points of contact by name and telephone number for a Navy representative and an Air Force representative, which will be provided by the Contracting Officer.

1.3.3 Construction Project Signs (USACE)

Furnish the construction project sign package, maintain the signs during construction, and remove the signs from the job site upon completion of the project. The construction project sign package consists of two signs: one for project identification and the other to show the on-the-job safety performance of the contractor. The package shall conform to the requirements of EP 310-1-6a and EP 310-1-6b, specifically Section 16. Submit the sign legend orders as described in Section 16 of EP 310-1-6a prior to erecting the signs.

PART 2 PRODUCTS

Not Used

PART 3 EXECUTION

Not Used

-- End of Section --

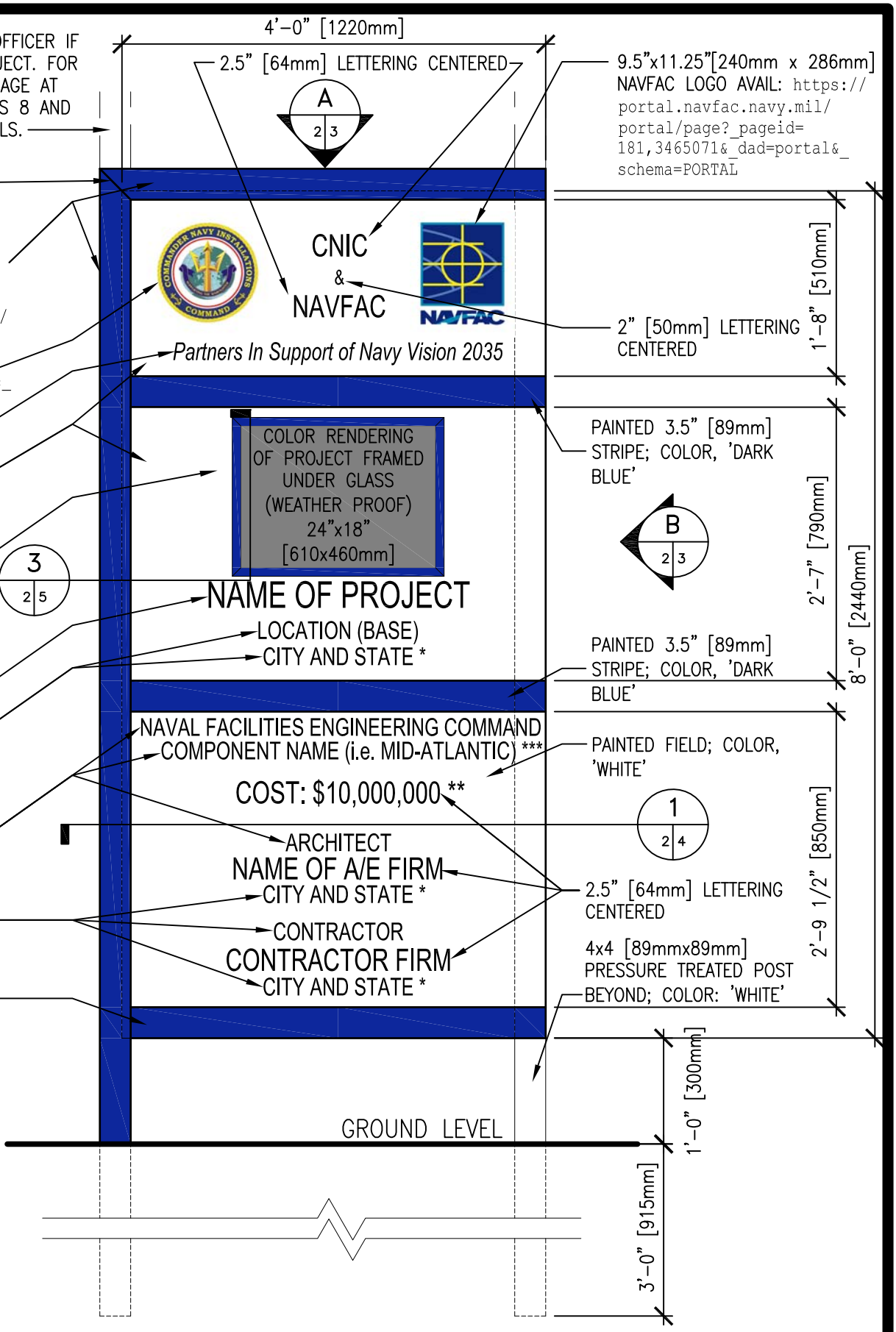

NOTES:
1. PAINT ALL OTHER WOOD SURFACES WITH ONE COAT EXT. PRIMER AND TWO COATS GLOSS WHITE ENAMEL.
2. ALL LETTERING SHALL BE EVENLY SPACED.
3. LETTER STYLE, 'ARIAL', COLOR 'DARK BLUE'. TYPICAL FOR ALL LETTERING.
*–ABBREVIATE STATE
**–CONFIRM USE WITH CONTRACTING OFFICER
***–VERIFY NAME WITH CONTRACTING OFFICER.

PROJECT IDENTIFICATION SIGNBOARD

SCALE: 3/4" = 1'-0"

PLATE 2

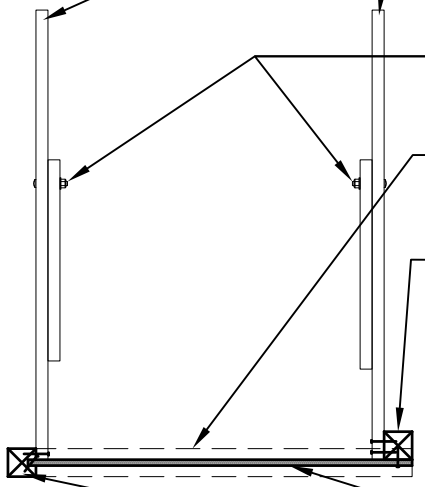

A 1,2 3

TOP VIEW

SCALE: 1/2" = 1'-0"

NOTES:
1. POSTS AND BRACES SHALL BE PRESSURE TREATED.
2. ALL FASTENERS SHALL BE ZINC COATED.
3. BRACING IS REQUIRED IN ALL SOIL CONDITIONS AND HIGH WIND ENVIRONMENTS.

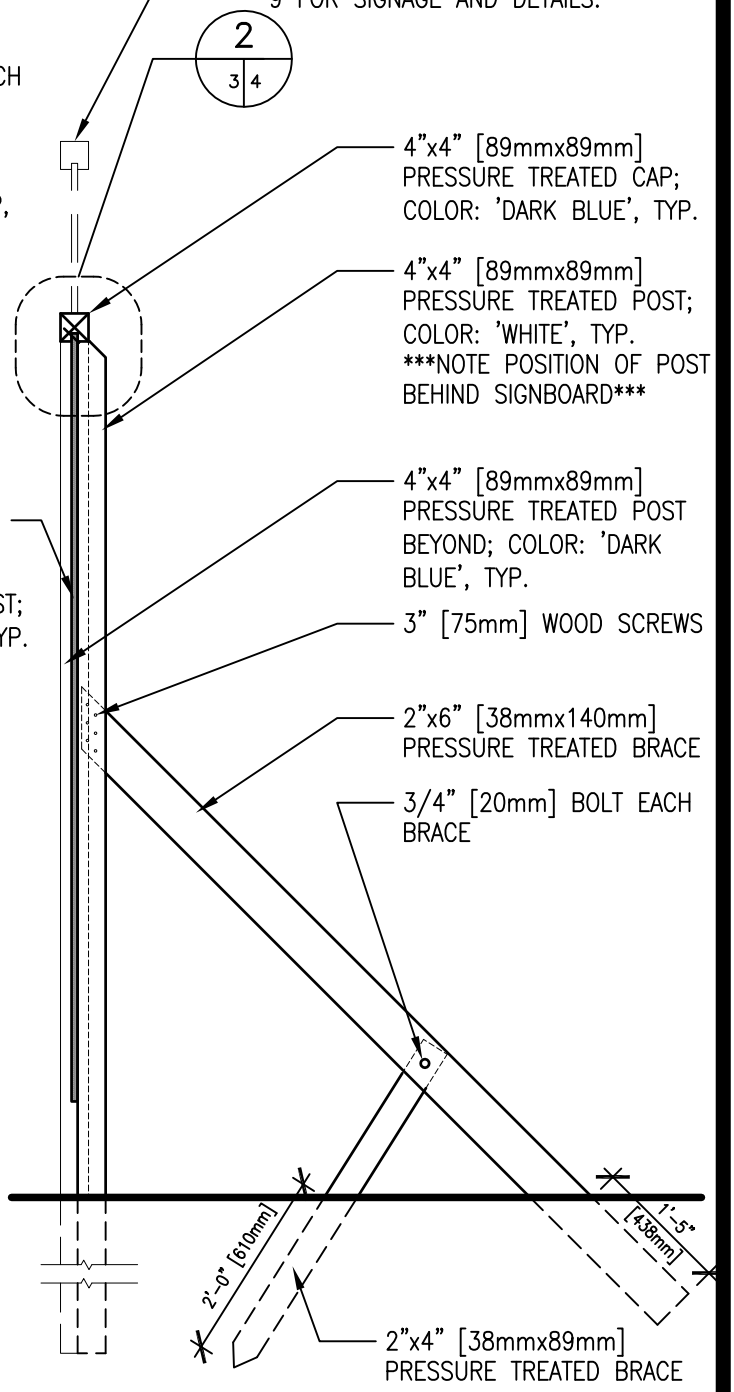

B 1,2 3

SIDE VIEW

SCALE: 1/2" = 1'-0"

PROJECT IDENTIFICATION SIGNBOARD SUPPORT DETAILS

PLATE 3

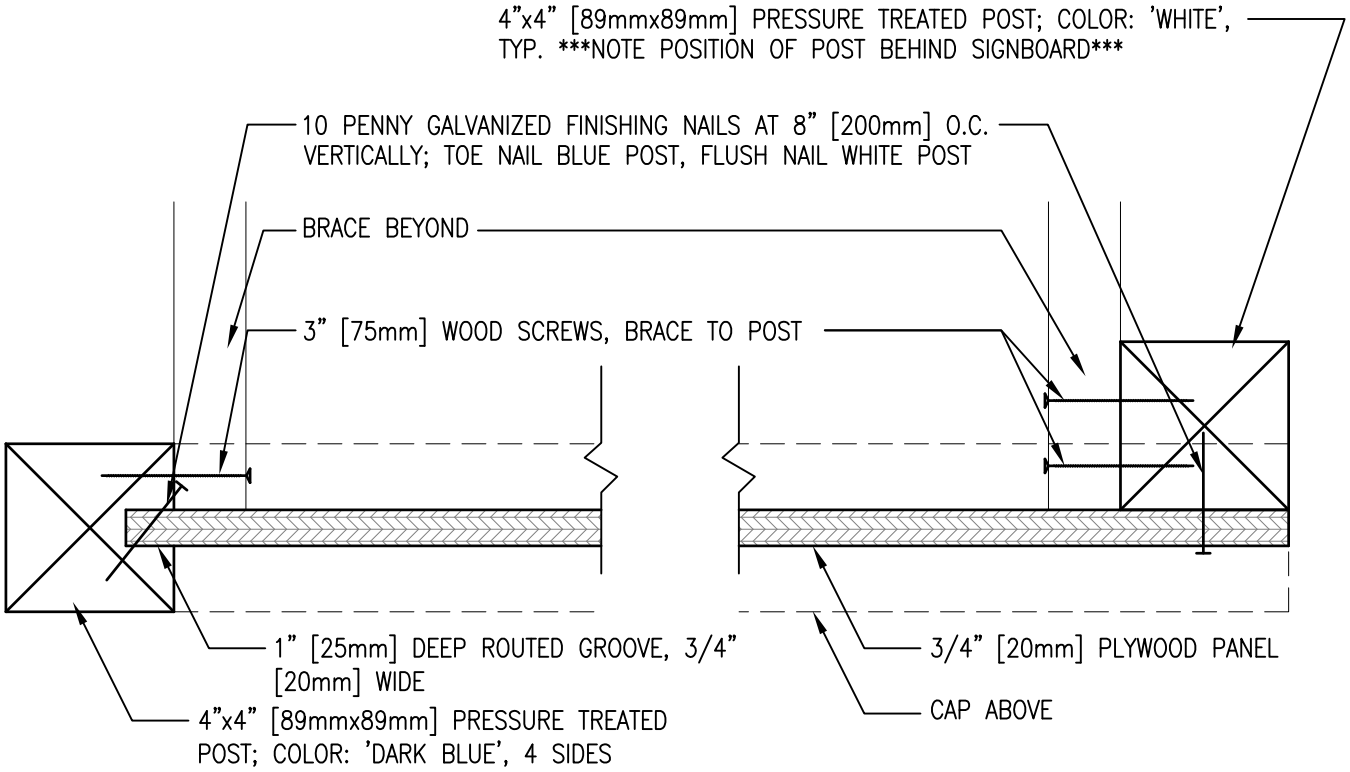

1 PLAN SECTION

1,2 | 4

SCALE: 3" = 1'-0"

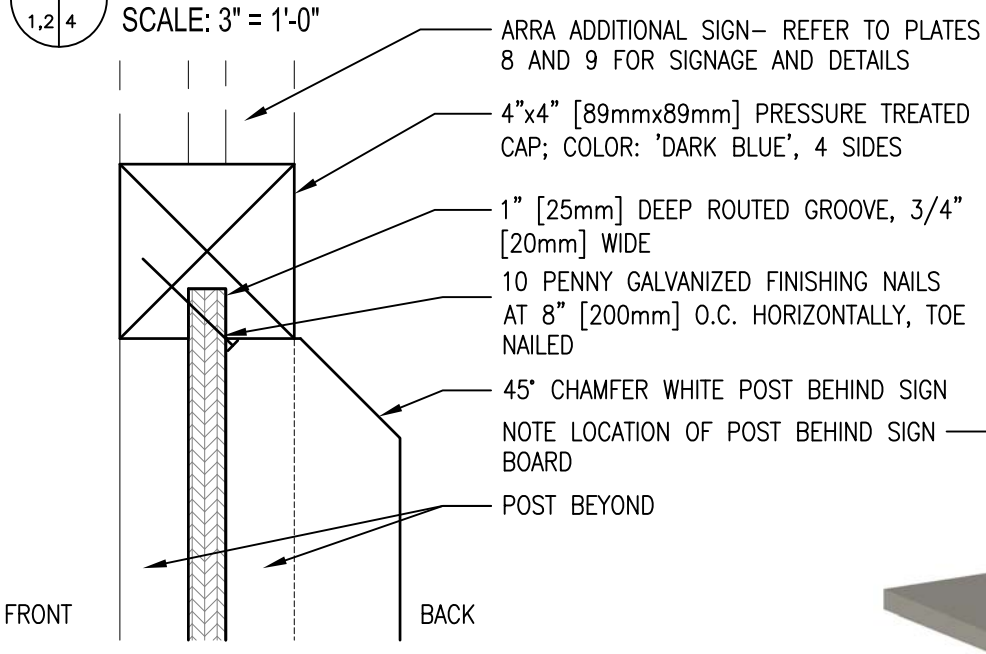

2 SECTION AT TOP

1,2 | 4

SCALE: 3" = 1'-0"

3 ISO VIEW

2 | 4

SCALE: NONE

PROJECT IDENTIFICATION SIGNBOARD SECTIONS

PLATE 4

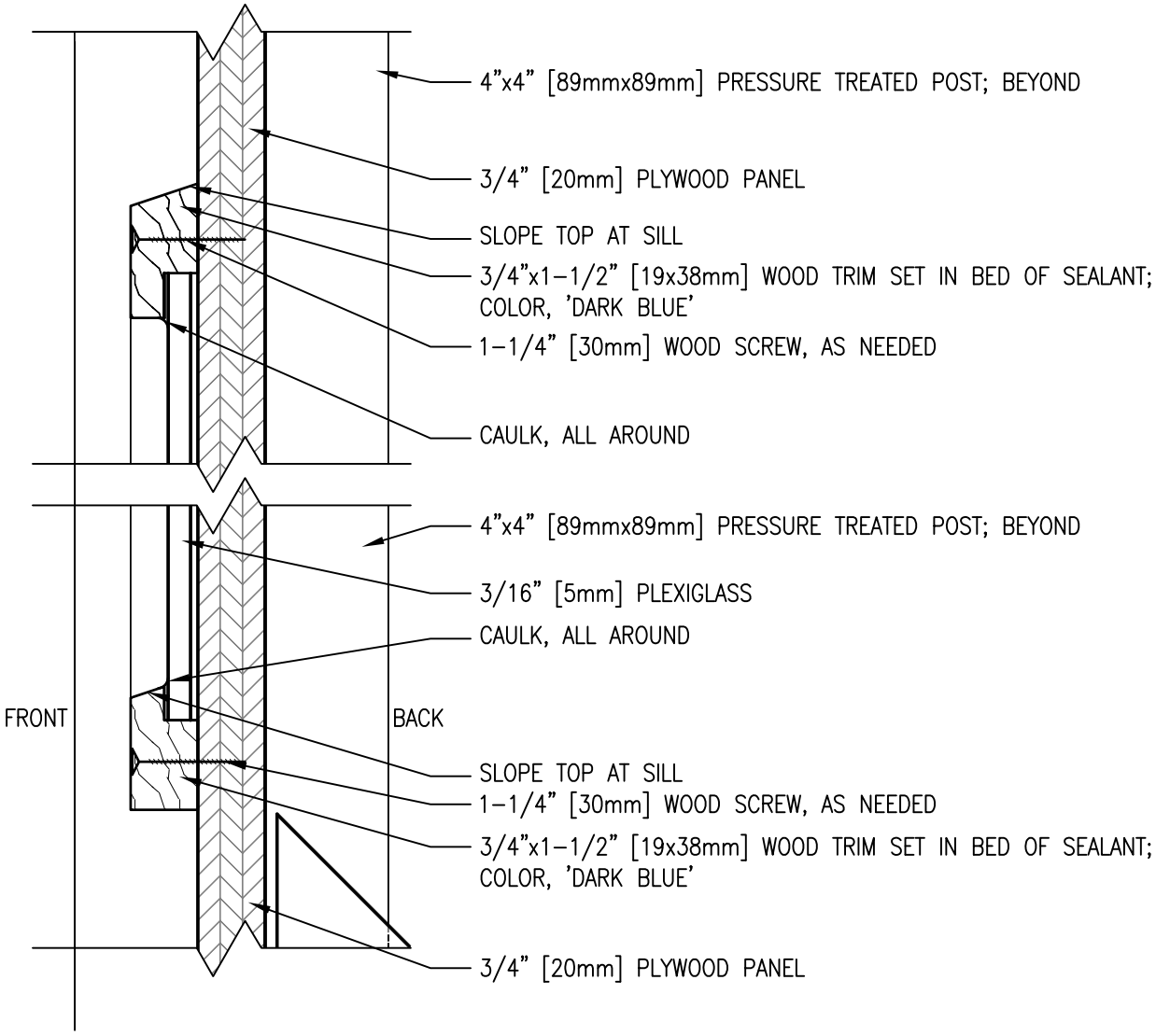

3
2 5

SECTION AT RENDERING FRAME

SCALE: 6" = 1'-0"

PROJECT IDENTIFICATION SIGNBOARD SECTION

PLATE 5

SECTION 01 62 35

RECYCLED / RECOVERED / BIOBASED MATERIALS
05/13

PART 1 GENERAL

1.1 REFERENCES

The publications listed below form a part of this specification to the extent referenced. The publications are referred to within the text by the basic designation only.

U.S. NATIONAL ARCHIVES AND RECORDS ADMINISTRATION (NARA)

40 CFR 247	Comprehensive Procurement Guideline for Products Containing Recovered Materials
48 CFR 23	Environment, Energy and Water Efficiency, Renewable Energy Technologies, Occupational Safety, and Drug-Free Workplace

1.2 OBJECTIVES

Government procurement policy is to acquire, in a cost effective manner, items containing the highest percentage of recycled, recovered and biobased materials practicable consistent with maintaining a satisfactory level of competition without adversely affecting performance requirements or exposing suppliers' employees to undue hazards from the recovered materials. The Environmental Protection Agency (EPA) and the United States Department of Agriculture (USDA)has designated certain items which must contain a specified percent range of recovered or recycled materials. EPA and USDA designated products specified in this contract comply with the stated policy and with the EPA and USDA guidelines. Make all reasonable efforts to use recycled, recovered and biobased materials in providing the EPA and USDA designated products and in otherwise utilizing recycled, recovered and biobased materials in the execution of the work.

1.3 SUBMITTALS

Government approval is required for submittals with a "G" designation; submittals not having a "G" designation are for Contractor Quality Control approval. Submit the following in accordance with Section 01 33 00 SUBMITTAL PROCEDURES:

SD-01 Preconstruction Submittals

Biobased Products; G

1.4 DESIGNATED ITEMS INCORPORATED IN THE WORK

Various sections of the specifications contain requirements for materials that have been designated by EPA and USDA as being products which are or can be made with recovered or recycled, recovered and biobased materials. These items, when incorporated into the work under this contract, shall

contain at least the specified percentage of recycled or recovered materials or biobased unless adequate justification (non-availability) for non-use is provided. When a designated item is specified as an option to a non-designated item, the designated item requirements apply only if the designated item is used in the work.

1.5 PROPOSED ITEMS INCORPORATED IN THE WORK

Products other than those designated by EPA and USDA are still being researched and are being considered for future Comprehensive Procurement Guideline (CPG) and USDA's Federal Procument Preferences (FPP) designations. It is recommended that these items, when incorporated in the work under this contract, contain the highest practicable percentage of recycled, recovered and biobased materials, provided specified requirements are also met.

1.6 LISTED ITEMS USED IN CONDUCT OF THE WORK BUT NOT INCORPORATED IN THE WORK

Many products listed in 40 CFR 247 and 48 CFR 23 have been designated or proposed by EPA and USDA to include recycled, recovered and biobased materials that may be used by the Contractor in performing the work but will not be incorporated into the work. These products include office products, temporary traffic control products, and pallets. It is recommended that these non-construction products, when used in the conduct of the work, contain the highest practicable percentage of recycled, recovered and biobased materials and that these products be recycled when no longer needed.

1.7 BIOPREFERRED FPP

Utilize products and material made from biobased materials to the maximum extent possible without jeopardizing the intended end use or detracting from the overall quality delivered to the end user. All supplies and materials shall be of a type and quality that conform to applicable specifications and standards.

Biobased products that are designated for preferred procurement under USDA’s BioPreferred program must meet the required minimum biobased content. Refer to http://www.biopreferred.gov/ProductCategories.aspx for the product categories and http://www.biopreferred.gov/bioPreferredCatalog/faces/jsp/catalogLanding.jsp for the BioPreferred Catalog. Submit data for the biobased products to include biobased content and source of biobased material; indicating the name of the manufacturer, cost of each material, and the intended use of each of the materials that are to be used in carrying out the requirements of the contract.

PART 2 PRODUCTS

Not Used

PART 3 EXECUTION

Not Used

-- End of Section --

SECTION 01 74 19

CONSTRUCTION AND DEMOLITION WASTE MANAGEMENT
01/07

PART 1 GENERAL

1.1 REFERENCES

The publications listed below form a part of this specification to the extent referenced. The publications are referred to within the text by the basic designation only.

U.S. GREEN BUILDING COUNCIL (USGBC)

LEED GBDC	(2009) LEED Reference Guide for Green Building Design and Construction
LEED NC	(2009) Leadership in Energy and Environmental Design(tm) New Construction Rating System

1.2 GOVERNMENT POLICY

Government policy is to apply sound environmental principles in the design, construction and use of facilities. As part of the implementation of that policy: (1) practice efficient waste management when sizing, cutting, and installing products and materials and (2) use all reasonable means to divert construction and demolition waste from landfills and incinerators and to facilitate their recycling or reuse. A minimum of 50 percent by weight of total project solid waste shall be diverted from the landfill.

1.3 MANAGEMENT

Develop and implement a waste management program. Take a pro-active, responsible role in the management of construction and demolition waste and require all subcontractors, vendors, and suppliers to participate in the effort. Construction and demolition waste includes products of demolition or removal, excess or unusable construction materials, packaging materials for construction products, and other materials generated during the construction process but not incorporated into the work. In the management of waste consideration shall be given to the availability of viable markets, the condition of the material, the ability to provide the material in suitable condition and in a quantity acceptable to available markets, and time constraints imposed by internal project completion mandates. The Contractor is responsible for implementation of any special programs involving rebates or similar incentives related to recycling of waste. Revenues or other savings obtained for salvage, or recycling accrue to the Contractor.

Appropriately permit firms and facilities used for recycling, reuse, and disposal for the intended use to the extent required by federal, state, and local regulations. Also, provide on-site instruction of appropriate separation, handling, recycling, salvage, reuse, and return methods to be used by all parties at the appropriate stages of the project.

1.4 SUBMITTALS

Government approval is required for submittals with a "G" designation; submittals not having a "G" designation are for Contractor Quality Control approval. When used, a designation following the "G" designation identifies the office that will review the submittal for the Government. The following shall be submitted in accordance with Section 01 33 00 SUBMITTAL PROCEDURES:

SD-01 Preconstruction Submittals

Waste Management Plan; G

SD-11 Closeout Submittals

Records; (LEED)

1.5 MEETINGS

Conduct Construction Waste Management meetings. After award of the Contract and prior to commencement of work, schedule and conduct a meeting with the Contracting Officer to discuss the proposed Waste Management Plan and to develop a mutual understanding relative to the details of waste management. The requirements for this meeting may be fulfilled during the coordination and mutual understanding meeting outlined in Section 01 45 00.10 20 QUALITY CONTROL FOR MINOR CONSTRUCTION. At a minimum, environmental and waste management goals and issues shall be discussed at the following additional meetings:

a. Pre-bid meeting.

b. Preconstruction and Pre-demolition meeting.

c. Regular site and QC meetings.

d. Work safety meetings.

1.6 WASTE MANAGEMENT PLAN

A waste management plan shall be submitted within 15 days after notice to proceed and not less than 10 days before the preconstruction and pre-demolition meetings. The plan shall demonstrate how the project waste diversion goal shall be met and shall include the following:

a. Name of individuals on the Contractor's staff responsible for waste prevention and management.

b. Actions that will be taken to reduce solid waste generation, including coordination with subcontractors to ensure awareness and participation.

c. Description of the regular meetings to be held to address waste management.

d. Description of the specific approaches to be used in recycling/reuse of the various materials generated, including the areas on site and equipment to be used for processing, sorting, and temporary storage of wastes.

e. Characterization, including estimated types and quantities, of the waste to be generated.

f. Name of landfill and/or incinerator to be used and the estimated costs for use, assuming that there would be no salvage or recycling on the project.

g. Identification of local and regional reuse programs, including non-profit organizations such as schools, local housing agencies, and organizations that accept used materials such as materials exchange networks and Habitat for Humanity. Include the name, location, and phone number for each reuse facility to be used, and provide a copy of the permit or license for each facility.

h. List of specific waste materials that will be salvaged for resale, salvaged and reused on the current project, salvaged and stored for reuse on a future project, or recycled. Recycling facilities that will be used shall be identified by name, location, and phone number, including a copy of the permit or license for each facility.

i. Identification of materials that cannot be recycled/reused with an explanation or justification, to be approved by the Contracting Officer.

j. Description of the means by which any waste materials identified in item (h) above will be protected from contamination.

k. Description of the means of transportation of the recyclable materials (whether materials will be site-separated and self-hauled to designated centers, or whether mixed materials will be collected by a waste hauler and removed from the site).

l. Anticipated net cost savings determined by subtracting Contractor program management costs and the cost of disposal from the revenue generated by sale of the materials and the incineration and/or landfill cost avoidance.

Revise and resubmit Plan as required by the Contracting Officer. Approval of Contractor's Plan will not relieve the Contractor of responsibility for compliance with applicable environmental regulations or meeting project cumulative waste diversion requirement. Distribute copies of the Waste Management Plan to each subcontractor, the Quality Control Manager, and the Contracting Officer.

1.7 RECORDS

Records shall be maintained to document the quantity of waste generated; the quantity of waste diverted through sale, reuse, or recycling; and the quantity of waste disposed by landfill or incineration. Records shall be kept in accordance with the LEED Reference Guide and using the LEED Letter Template. Quantities may be measured by weight or by volume, but must be consistent throughout. List each type of waste separately noting the disposal or diversion date. Identify the landfill, recycling center, waste processor, or other organization used to process or receive the solid waste. Provide explanations for any waste not recycled or reused. With each application for payment, submit updated documentation for solid waste disposal and diversion, and submit manifests, weight tickets, receipts,

and invoices specifically identifying the project and waste material. The records shall be made available to the Contracting Officer during construction, and a copy of the records shall be delivered to the Contracting Officer upon completion of the construction.

Demolition accomplished by other parties on this project site count toward the project's total waste diversion cumulative score for LEED. Information on the quantity and disposition of these materials will be provided by the Contracting Officer. Include this data in records, annotated to indicate that it was accomplished by another party.

1.8 REPORTS

Provide quarterly reports and a final report to the Construction Management Engineer (CME). Quarterly and final reports shall include project name, information for waste generated this quarter, and cumulative totals for the project. Each report shall include supporting documentation to include manifests, weight tickets, receipts, and invoices specifically identifying the project and waste material. Include timber harvest and demolition information, if any.

1.9 COLLECTION

Separate, store, protect, and handle at the site identified recyclable and salvageable waste products in a manner that maximizes recyclability and salvagability of identified materials. Provide the necessary containers, bins and storage areas to facilitate effective waste management and clearly and appropriately identify them. Provide materials for barriers and enclosures around recyclable material storage areas which are nonhazardous and recyclable or reusable. Locate out of the way of construction traffic. Provide adequate space for pick-up and delivery and convenience to subcontractors. Recycling and waste bin areas are to be kept neat and clean, and recyclable materials shall be handled to prevent contamination of materials from incompatible products and materials. Clean contaminated materials prior to placing in collection containers. Use cleaning materials that are nonhazardous and biodegradable. Handle hazardous waste and hazardous materials in accordance with applicable regulations and coordinate with Section 01 57 19.00 20 TEMPORARY ENVIRONMENTAL CONTROLS. Separate materials by one of the following methods:

1.9.1 Source Separated Method.

Waste products and materials that are recyclable shall be separated from trash and sorted as described below into appropriately marked separate containers and then transported to the respective recycling facility for further processing. Deliver materials in accordance with recycling or reuse facility requirements (e.g., free of dirt, adhesives, solvents, petroleum contamination, and other substances deleterious to the recycling process). Separate materials into the following category types as appropriate to the project waste and to the available recycling and reuse programs in the project area:

a. Land clearing debris.

b. Asphalt.

c. Concrete and masonry.

d. Metal (e.g. banding, stud trim, ductwork, piping, rebar, roofing, other trim, steel, iron, galvanized, stainless steel, aluminum, copper, zinc, lead brass, bronze).

(1) Ferrous.

(2) Non-ferrous.

e. Wood (nails and staples allowed).

f. Debris.

g. Glass (colored glass allowed).

h. Paper.

(1) Bond.

(2) Newsprint.

(3) Cardboard and paper packaging materials.

i. Plastic.

(1) Type 1: Polyethylene Terephthalate (PET, PETE).

(2) Type 2: High Density Polyethylene (HDPE).

(3) Type 3: Vinyl (Polyvinyl Chloride or PVC).

(4) Type 4: Low Density Polyethylene (LDPE).

(5) Type 5: Polypropylene (PP).

(6) Type 6: Polystyrene (PS).

(7) Type 7: Other. Use of this code indicates that the package in question is made with a resin other than the six listed above, or is made of more than one resin listed above, and used in a multi-layer combination.

j. Non-hazardous paint and paint cans.

1.9.2 Co-Mingled Method.

Waste products and recyclable materials shall be placed into a single container and then transported to a recycling facility where the recyclable materials are sorted and processed.

1.9.3 Other Methods.

Other methods proposed by the Contractor may be used when approved by the Contracting Officer.

1.10 DISPOSAL

Control accumulation of waste materials and trash. Recycle or dispose of collected materials off-site at intervals approved by the Contracting Officer and in compliance with waste management procedures. Except as otherwise specified in other sections of the specifications, disposal shall be in accordance with the following:

1.10.1 Reuse

First consideration shall be given to salvage for reuse since little or no re-processing is necessary for this method, and less pollution is created when items are reused in their original form. Coordinate reuse with the Contracting Officer. Sale or donation of waste suitable for reuse shall be considered.

1.10.2 Recycle

Waste materials not suitable for reuse, but having value as being recyclable, shall be made available for recycling. All fluorescent lamps, HID lamps, and mercury-containing thermostats removed from the site shall be recycled. Arrange for timely pickups from the site or deliveries to recycling facilities in order to prevent contamination of recyclable materials.

1.10.3 Compost

Consider composting on site if a reasonable amount of compostable material will be available. Compostable materials include plant material, sawdust, and certain food scraps.

1.10.4 Waste

Materials with no practical use or economic benefit shall be disposed at a landfill or incinerator.

1.10.5 Return

Set aside and protect misdelivered and substandard products and materials and return to supplier for credit.

PART 2 PRODUCTS

Not used.

PART 3 EXECUTION

Not used.

-- End of Section --

SECTION 01 78 00

CLOSEOUT SUBMITTALS
08/11

PART 1 GENERAL

1.1 REFERENCES

The publications listed below form a part of this specification to the extent referenced. The publications are referred to within the text by the basic designation only.

ASTM INTERNATIONAL (ASTM)

ASTM E 1971	(2005; R 2011) Stewardship for the Cleaning of Commercial and Institutional Buildings

GREEN SEAL (GS)

GS-37	(2012) Cleaning Products for Industrial and Institutional Use

U.S. ARMY CORPS OF ENGINEERS (USACE)

TR-06-X	(2006; Supplement 2009) A/E/C (Architectural, Engineering, and Construction) CADD Standard – Release 3.0

U.S. DEPARTMENT OF DEFENSE (DOD)

UFC 1-300-08	(2009, with Change 1) Criteria for Transfer and Acceptance of DoD Real Property

1.2 SUBMITTALS

Government approval is required for submittals with a "G" designation; submittals not having a "G" designation are for Contractor Quality Control approval. When used, a designation following the "G" designation identifies the office that will review the submittal for the Government. Submit the following in accordance with Section 01 33 00 SUBMITTAL PROCEDURES:

SD-03 Product Data

Warranty Management Plan

Warranty Tags

Final Cleaning

SD-11 Closeout Submittals

Certification of EPA Designated Items; G

NAVFAC Sustainable & Energy Data record Card; G

1.3 CERTIFICATION OF EPA DESIGNATED ITEMS

Submit the Certification of EPA Designated Items as required by FAR 52.223-9, "Certification and Estimate of Percentage of Recovered Material Content for EPA Designated Items". Include on the certification form the following information: project name, project number, Contractor name, license number, Contractor address, and certification. The certification will read as follows and be signed and dated by the Contractor. "I hereby certify the information provided herein is accurate and that the requisition/procurement of all materials listed on this form comply with current EPA standards for recycled/recovered materials content. The following exemptions may apply to the non-procurement of recycled/recovered content materials: 1) The product does not meet appropriate performance standards; 2) The product is not available within a reasonable time frame; 3) The product is not available competitively (from two or more sources); 4) The product is only available at an unreasonable price (compared with a comparable non-recycled content product)." Record each product used in the project that has a requirement or option of containing recycled or biobased content in accordance with Section 01 62 35 RECYCLED/RECOVERED MATERIALS, noting total price, total value of post-industrial recycled content, total value of post-consumer recycled content, total value of biobased content, exemptions (1, 2, 3, or 4, as indicated), and comments. Recycled and biobased content values may be determined by weight or volume percent, but must be consistent throughout.

1.7 WARRANTY MANAGEMENT

1.7.1 Warranty Management Plan

Develop a warranty management plan which contains information relevant to the clause Warranty of Construction. At least 30 days before the planned pre-warranty conference, submit one set of the warranty management plan. Include within the warranty management plan all required actions and documents to assure that the Government receives all warranties to which it is entitled. The plan must be in narrative form and contain sufficient detail to render it suitable for use by future maintenance and repair personnel, whether tradesmen, or of engineering background, not necessarily familiar with this contract. The term "status" as indicated below must include due date and whether item has been submitted or was accomplished. Warranty information made available during the construction phase must be submitted to the Contracting Officer for approval prior to each monthly pay estimate. Assemble approved information in a binder and turn over to the Government upon acceptance of the work. The construction warranty period will begin on the date of project acceptance and continue for the full product warranty period. A joint 4 month and 9 month warranty inspection will be conducted, measured from time of acceptance, by the Contractor, Contracting Officer and the Customer Representative. Include within the warranty management plan, but not limited to, the following:

a. Roles and responsibilities of all personnel associated with the warranty process, including points of contact and telephone numbers within the organizations of the Contractors, subcontractors, manufacturers or suppliers involved.

b. Furnish with each warranty the name, address, and telephone number of each of the guarantor's representatives nearest to the project location.

c. Listing and status of delivery of all Certificates of Warranty for extended warranty items, to include roofs, HVAC balancing, pumps, motors, transformers, and for all commissioned systems such as fire protection and alarm systems, sprinkler systems, lightning protection systems, etc.

d. A list for each warranted equipment, item, feature of construction or system indicating:

(1) Name of item.
(2) Model and serial numbers.
(3) Location where installed.
(4) Name and phone numbers of manufacturers or suppliers.
(5) Names, addresses and telephone numbers of sources of spare parts.
(6) Warranties and terms of warranty. Include one-year overall warranty of construction, including the starting date of warranty of construction. Items which have extended warranties must be indicated with separate warranty expiration dates.
(7) Cross-reference to warranty certificates as applicable.
(8) Starting point and duration of warranty period.
(9) Summary of maintenance procedures required to continue the warranty in force.
(10) Cross-reference to specific pertinent Operation and Maintenance manuals.
(11) Organization, names and phone numbers of persons to call for warranty service.
(12) Typical response time and repair time expected for various warranted equipment.

e. The Contractor's plans for attendance at the 4 and 9 month post-construction warranty inspections conducted by the Government.

f. Procedure and status of tagging of all equipment covered by extended warranties.

g. Copies of instructions to be posted near selected pieces of equipment where operation is critical for warranty and/or safety reasons.

1.7.2 Performance Bond

The Contractor's Performance Bond must remain effective throughout the construction period.

a. In the event the Contractor fails to commence and diligently pursue any construction warranty work required, the Contracting Officer will have the work performed by others, and after completion of the work, will charge the remaining construction warranty funds of expenses incurred by the Government while performing the work, including, but not limited to administrative expenses.

b. In the event sufficient funds are not available to cover the construction warranty work performed by the Government at the Contractor's expense, the Contracting Officer will have the right to recoup expenses from the bonding company.

c. Following oral or written notification of required construction warranty repair work, respond in a timely manner. Written verification will follow oral instructions. Failure of the Contractor to respond will be cause for the Contracting Officer to proceed against the Contractor.

1.7.3 Pre-Warranty Conference

Prior to contract completion, and at a time designated by the Contracting Officer, meet with the Contracting Officer to develop a mutual understanding with respect to the requirements of this section. Communication procedures for Contractor notification of construction warranty defects, priorities with respect to the type of defect, reasonable time required for Contractor response, and other details deemed necessary by the Contracting Officer for the execution of the construction warranty will be established/reviewed at this meeting. In connection with these requirements and at the time of the Contractor's quality control completion inspection, furnish the name, telephone number and address of a licensed and bonded company which is authorized to initiate and pursue construction warranty work action on behalf of the Contractor. This point of contact will be located within the local service area of the warranted construction, be continuously available, and be responsive to Government inquiry on warranty work action and status. This requirement does not relieve the Contractor of any of its responsibilities in connection with other portions of this provision.

1.7.4 Contractor's Response to Construction Warranty Service Requirements

Following oral or written notification by the Contracting Officer, respond to construction warranty service requirements in accordance with the "Construction Warranty Service Priority List" and the three categories of priorities listed below. Submit a report on any warranty item that has been repaired during the warranty period. Include within the report the cause of the problem, date reported, corrective action taken, and when the repair was completed. If the Contractor does not perform the construction warranty within the timeframes specified, the Government will perform the work and backcharge the construction warranty payment item established.

a. First Priority Code 1. Perform onsite inspection to evaluate situation, and determine course of action within 4 hours, initiate work within 6 hours and work continuously to completion or relief.

b. Second Priority Code 2. Perform onsite inspection to evaluate situation, and determine course of action within 8 hours, initiate work within 24 hours and work continuously to completion or relief.

c. Third Priority Code 3. All other work to be initiated within 3 work days and work continuously to completion or relief.

d . The "Construction Warranty Service Priority List" is as follows:

Code 1-Life Safety Systems
(1) Fire suppression systems.
(2) Fire alarm system(s) in place in the building.

Code 1-Air Conditioning Systems
(1) Recreational support.
(2) Air conditioning leak in part of building, if causing damage.
(3) Air conditioning system not cooling properly.

Code 1-Doors
(1) Overhead doors not operational, causing a security, fire, or safety problem.
(2) Interior, exterior personnel doors or hardware, not functioning properly, causing a security, fire, or safety problem.

Code 3-Doors
(1) Overhead doors not operational.
(2) Interior/exterior personnel doors or hardware not functioning properly.

Code 1-Electrical
(1) Power failure (entire area or any building operational after 1600 hours).
(2) Security lights
(3) Smoke detectors

Code 2-Electrical
(1) Power failure (no power to a room or part of building).
(2) Receptacle and lights (in a room or part of building).

Code 3-Electrical
Street lights.

Code 1-Gas
(1) Leaks and breaks.
(2) No gas to family housing unit or cantonment area.

Code 1-Heat
(1) Area power failure affecting heat.
(2) Heater in unit not working.

Code 2-Kitchen Equipment
(1) Dishwasher not operating properly.
(2) All other equipment hampering preparation of a meal.

Code 1-Plumbing
(1) Hot water heater failure.
(2) Leaking water supply pipes.

Code 2-Plumbing
(1) Flush valves not operating properly.
(2) Fixture drain, supply line to commode, or any water pipe leaking.
(3) Commode leaking at base.

Code 3 -Plumbing
Leaky faucets.

Code 3-Interior
(1) Floors damaged.
(2) Paint chipping or peeling.
(3) Casework.

Code 1-Roof Leaks
Temporary repairs will be made where major damage to property is occurring.

Code 2-Roof Leaks
Where major damage to property is not occurring, check for location of leak during rain and complete repairs on a Code 2 basis.

Code 2-Water (Exterior)
No water to facility.

Code 2-Water (Hot)
No hot water in portion of building listed.

Code 3-All other work not listed above.

1.7.5 Warranty Tags

At the time of installation, tag each warranted item with a durable, oil and water resistant tag approved by the Contracting Officer. Attach each tag with a copper wire and spray with a silicone waterproof coating. Also, submit two record copies of the warranty tags showing the layout and design. The date of acceptance and the QC signature must remain blank until the project is accepted for beneficial occupancy. Show the following information on the tag.

Type of product/material	
Model number	
Serial number	
Contract number	
Warranty period from/to	
Inspector's signature	
Construction Contractor	
Address	
Telephone number	
Warranty contact	
Address	
Telephone number	
Warranty response time priority code	

WARNING - PROJECT PERSONNEL TO PERFORM ONLY OPERATIONAL MAINTENANCE DURING THE WARRANTY PERIOD

1.9 CLEANUP

Provide final cleaning in accordance with ASTM E 1971 and submit two copies of the listing of completed final clean-up items. Leave premises "broom clean." Comply with GS-37 for general purpose cleaning and bathroom cleaning. Use only nonhazardous cleaning materials, including natural cleaning materials, in the final cleanup. Clean interior and exterior glass surfaces exposed to view; remove temporary labels, stains and foreign substances; polish transparent and glossy surfaces; vacuum carpeted and soft surfaces. Clean equipment and fixtures to a sanitary condition. Replace filters of operating equipment and comply with the Indoor Air Quality (IAQ) Management Plan. Clean debris from roofs, gutters, downspouts and drainage systems. Sweep paved areas and rake clean landscaped areas. Remove waste and surplus materials, rubbish and construction facilities from the site. Recycle, salvage, and return construction and demolition waste from project in accordance with the Waste Management Plan. Promptly and legally transport and dispose of any trash. Do not burn, bury, or otherwise dispose of trash on the project site.

1.10 NAVFAC SUSTAINABLE & ENERGY DATA RECORD CARD

Within 60 days of the completion of Project, complete an electronic copy of the NAVFAC Sustainable & Energy Data Record Card, and submit to the Contracting Officer. Draft Record card for this project should be available from Designer of Record (DOR) or Contracting Officer. Instructions and a blank DD Form (fill-able) in ADOBE (PDF) may be obtained at the Whole Building Design Guide web site by navigating:

Home > Participating Agencies > Department of Defense (DoD) > NAVFAC Sustainable Development Program > Contract Documents > NAVFAC Sustainable &
Energy Data Record Card; or directly at

http://www.wbdg.org/pdfs/navfac_sustainable_energy_data_record_card.pdf.

PART 2 PRODUCTS

Not Used

PART 3 EXECUTION

Not Used

-- End of Section --

Solicitation No.
N40192-15-R-2900

PAINTING
INDEFINITE DELIVERY/INDEFINITE QUANTITY (IDIQ)

VARIOUS LOCATIONS, GUAM

PART V
PRESCRIPTIVE SPECIFICATIONS

SECTION 02 83 19.00 10

LEAD BASED PAINT HAZARD ABATEMENT, TARGET HOUSING & CHILD OCCUPIED FACILITIES
02/10

PART 1 GENERAL

1.1 REFERENCES

The publications listed below form a part of this specification to the extent referenced. The publications are referred to within the text by the basic designation only.

AMERICAN INDUSTRIAL HYGIENE ASSOCIATION (AIHA)

AIHA Z9.2	(2012) Fundamentals Governing the Design and Operation of Local Exhaust Ventilation Systems

ASTM INTERNATIONAL (ASTM)

ASTM E 1613	(2012) Determination of Lead by Inductively Coupled Plasma Atomic Emission Spectrometry (ICP-AES), Flame Atomic Absorption Spectrometry (FAAS), or Graphite Furnace Atomic Absorption Spectometry (GFAAS) Techniques
ASTM E 1644	(2004; E 2012; R 2012) Hot Plate Digestion of Dust Wipe Samples for the Determination of Lead
ASTM E 1726	(2001; R 2009) Preparation of Soil Samples by Hotplate Digestion for Subsequent Lead Analysis
ASTM E 1727	(2005) Field Collection of Soil Samples for Lead Determination by Atomic Spectrometry Techniques
ASTM E 1728	(2010) Collection of Settled Dust Samples Using Wipe Sampling Methods for Subsequent Lead Determination
ASTM E 1792	(2003; R 2011) Wipe Sampling Materials for Lead in Surface Dust

NATIONAL FIRE PROTECTION ASSOCIATION (NFPA)

NFPA 701	(2010) Standard Methods of Fire Tests for Flame Propagation of Textiles and Films

U.S. DEPARTMENT OF HOUSING AND URBAN DEVELOPMENT (HUD)

HUD 6780	(1995; Errata Aug 1996;Rev Ch. 7 - 1997) Guidelines for the Evaluation and Control of Lead-Based Paint Hazards in Housing

U.S. NATIONAL ARCHIVES AND RECORDS ADMINISTRATION (NARA)

40 CFR 745	Lead-Based Paint Poisoning Prevention in Certain Residential Structures

UNDERWRITERS LABORATORIES (UL)

UL 586	(2009) Standard for High-Efficiency Particulate, Air Filter Units

1.2 DEFINITIONS

1.2.1 Abatement

Measures defined in 40 CFR 745, Section 223, designed to permanently eliminate lead-based paint hazards.

1.2.2 Target Housing

Residential real property which is housing constructed prior to 1978, except housing for the elderly or persons with disabilities (unless any one or more children age 6 years or under resides or is expected to reside in such housing for the elderly or persons with disabilities) or any 0 bedroom dwelling.

1.2.3 Child-Occupied Facility

Real property which is a building or portion of a building constructed prior to 1978 visited regularly by the same child, 6 years of age or under, on at least two different days, provided that each day's visit lasts at least 6 hours, and the combined annual visits last at least 60 hours. Child-occupied facilities include but are not limited to, day-care centers, preschools and kindergarten classrooms.

1.2.4 Lead-Based Paint Hazards

Paint-lead hazard, dust-lead hazard or soil-lead hazard as identified in 40 CFR 745, Section 65.

1.3 SYSTEM DESCRIPTION

The work covered by this section includes work tasks, on the individual work task data sheets at the end of this section, and the precautions specified in this section for the protection of building occupants and the environment during and after the performance of lead hazard abatement activities.

1.3.1 Protection of Existing Areas To Remain

All project work including, but not limited to, lead hazard abatement work, storage, transportation, and disposal shall be performed without damaging or

contaminating adjacent work and areas. Where such work or areas are damaged or contaminated, restore work and areas to the original condition.

1.3.2 Coordination with Other Work

Coordinate lead hazard abatement activities with work being performed in adjacent areas. Coordination procedures shall be explained in the Contractor's Accident Prevention Plan and describe how the Contractor will prevent lead exposure to other Contractors and/or Government personnel performing work unrelated to lead hazard abatement activities.

1.3.3 Sampling and Analysis

Submit a log of the analytical results from sampling conducted during the abatement. The log of results shall be kept current with project activities and shall be briefed to the Contracting Officer as analytical results are reported.

1.3.3.1 Dust Wipe Materials, Sampling and Analysis

Sampling shall conform to ASTM E 1728 and ASTM E 1792. Analysis shall conform to ASTM E 1613 and ASTM E 1644.

1.3.3.2 Soil Sampling and Analysis

Sampling shall conform to ASTM E 1727. Analysis shall conform to ASTM E 1613 and ASTM E 1726.

1.3.3.3 Clearance Monitoring

a. Take dust wipe samples inside the lead hazard control area after the final visual inspection in the quantities and at the locations specified.

(1) Floors.
(2) Interior Window Sills.
(3) Window Troughs.

b. Take exterior bare soil samples inside the lead hazard control area after the final visual inspection in the quantities and at the locations specified.

(1) Near the building foundation.
(2) Nearby Play areas.

1.3.4 Clearance Requirements

Target housing and child occupied facilities clearance levels.

(1) Floors.
(2) Interior Window Sills.
(3) Window Troughs.
(4) Bare soils in play areas accessible by children.
(5) Bare soils in all other areas.

1.4 SUBMITTALS

Government approval is required for submittals with a "G" designation; submittals not having a "G" designation are for Contractor Quality Control approval. When used, a designation following the "G" designation identifies the office that will review the submittal for the Government. Submit the following in accordance with Section 01 33 00 SUBMITTAL PROCEDURES:

SD-03 Product Data

Materials and Equipment
Expendable Supplies
Qualifications; G
Occupant Protection Plan; G

SD-06 Test Reports

Pressure Differential Log
Licenses, Permits and Notifications; G
Sampling and Analysis; G
Abatement Report; G

1.5 QUALITY ASSURANCE

1.5.1 Qualifications and Organization Report

Submit a qualification and organization report. The report shall describe the qualifications of the certified supervisor, certified risk assessor, and certified abatement workers. Include in the report an organization chart showing the Contractor's personnel by name and title and project specific responsibilities and authorities. The report shall describe the qualifications of the laboratories selected for this project. The report shall be signed by the Contractor and the certified abatement supervisor to indicate that all personnel and laboratories comply with certification and experience requirements of this section and that project personnel have been given the authority to complete the tasks assigned to them.

1.5.2 Personnel and Subcontractor Responsibilities and Qualifications

1.5.2.1 Certified Abatement Supervisor

The abatement supervisor shall be certified pursuant to 40 CFR 745, Section 226 and is responsible for development and implementation of the occupant protection plan, the abatement report and shall supervise lead hazard abatement work activities.

1.5.2.2 Lead Hazard Abatement Workers

Lead hazard abatement workers shall be certified pursuant to 40 CFR 745, Section 226 and shall be responsible for performing the labor necessary to complete the lead hazard abatement activities required in this contract.

1.5.2.3 Certified Risk Assessor

The Certified Risk Assessor shall be certified pursuant to 40 CFR 745, Section 226 and shall be responsible to perform the clearance sampling, clearance sample data evaluation and shall summarize clearance sampling results in a section of the abatement report. The risk assessor shall sign the abatement report to indicate clearance requirements for the contract have been met.

1.5.2.4 Testing Laboratories

The laboratory selected to perform analysis on dust wipe, paint chip and soil samples shall be recognized by the EPA's National Lead Laboratory Accreditation Program (NLLAP).

1.5.3 Regulatory Requirements

The following State and local statutes, regulations and requirements apply to lead hazard abatement activities to be performed where work is performed.

1.5.4 Occupant Protection Plan

The certified supervisor shall develop and implement an Occupant Protection Plan describing the measures and management procedures to be taken during lead hazard abatement activities to protect the building occupants/building facilities and the outside environment from exposure to any lead contamination while lead hazard abatement activities are performed.

1.5.5 Licenses, Permits and Notifications

Certify and submit in writing to the Regional Office of the EPA and local jurisdiction’s environmental protection agency responsible for lead hazard abatement activities and the Contracting Officer at least 10 days prior to the commencement of work that licenses, permits and notifications have been obtained. The Contractor is responsible for all associated fees or costs incurred in obtaining the licenses, permits and notifications.

1.5.6 Training

Provide training to meet 40 CFR 745 Subpart L requirements by an EPA accredited training provider; provide proof in the Qualifications and Organization Report showing that personnel have passed certification examinations for their respective disciplines, that fees for certification have been paid to the EPA (or to the state for state-run programs) and that EPA has certified the supervisor, risk assessor, workers to perform their duties.

PART 2 PRODUCTS

2.1 MATERIALS AND EQUIPMENT

Materials and equipment needed to complete the project, shall be available and kept on the site. Submit a description of the materials and equipment required; including Material Safety Data Sheets (MSDSs) for material brought onsite to perform the work.

2.1.1 Expendable Supplies

Submit a description of the expendable supplies required.

2.1.1.1 Polyethylene Bags

Disposable bags shall be polyethylene plastic and shall be a minimum of 6 mils thick (4 mils thick if double bags are used) or any other thick plastic material shown to demonstrate at least equivalent performance; and shall be capable of being made leak-tight. Leak-tight means that solids, liquids or dust cannot escape or spill out.

2.1.1.2 Polyethylene Leak-tight Wrapping

Wrapping used to wrap lead contaminated debris shall be polyethylene plastic that is a minimum of 6 mils thick or any other thick plastic material shown to demonstrate at least equivalent performance.

2.1.1.3 Polyethylene Sheeting

Sheeting shall be polyethylene plastic with a minimum thickness of 6 mil, or any other thick plastic material shown to demonstrate at least equivalent performance; and shall be provided in the largest sheet size reasonably accommodated by the project to minimize the number of seams. Where the project location constitutes an out of the ordinary potential for fire, or where unusual fire hazards cannot be eliminated, flame-resistant polyethylene sheets which conform to the requirements of NFPA 701 shall be provided.

2.1.1.4 Tape and Adhesive Spray

Tape and adhesive shall be capable of sealing joints between polyethylene sheets and for attachment of polyethylene sheets to adjacent surfaces. After dry application, tape or adhesive shall retain adhesion when exposed to wet conditions, including amended water. Tape shall be minimum 2 inches wide, industrial strength.

2.1.1.5 Containers

When used, containers shall be leak-tight and shall be labeled in accordance with EPA, DOT and OSHA standards.

2.1.1.6 Chemical Paint Strippers

Chemical paint strippers shall not contain methylene chloride and shall be formulated to prevent stain, discoloration, or raising of the substrate materials.

2.1.1.7 Chemical Paint Stripper Neutralizer

Neutralizers for paint strippers shall be compatible with the substrate and suitable for use with the chemical stripper that has been applied to the surface.

2.1.1.8 Detergents and Cleaners

Detergents or cleaning agents shall not contain trisodium phosphate and shall have demonstrated effectiveness in lead control work using cleaning techniques specified by HUD 6780 guidelines.

2.2 EQUIPMENT

2.2.1 Abrasive Removal Equipment

The use of powered machine for vibrating, sanding, grinding, or abrasive blasting is prohibited unless equipped with local exhaust ventilation systems equipped with high efficiency particulate air (HEPA) filters.

2.2.2 Negative Air Pressure System

2.2.2.1 Minimum Requirements

Work shall not proceed in the area until containment is set up and HEPA filtration systems are in place. The negative air pressure system shall meet the requirements of AIHA Z9.2 including approved HEPA filters in accordance with UL 586. Negative air pressure equipment shall be equipped with new HEPA filters, and shall be sufficient to maintain a minimum pressure differential of minus 0.02 inch of water column relative to adjacent, unsealed areas. Negative air pressure system minimum requirements are listed as follows:

a. The unit shall be capable of delivering its rated volume of air with a clean first stage filter, an intermediate filter and a primary HEPA filter in place.

b. The HEPA filter shall be certified as being capable of trapping and retaining mono-dispersed particles as small as 0.3 micrometers at a minimum efficiency of 99.97 percent.

c. The unit shall be capable of continuing to deliver no less than 70 percent of rated capacity when the HEPA filter is 70 percent full or measures 2.5 inches of water static pressure differential on a magnehelic gauge.

d. The unit shall be equipped with a manometer-type negative pressure differential monitor with minor scale division of 0.02 inch of water and accuracy within plus or minus 1.0 percent. The manometer shall be calibrated daily as recommended by the manufacturer.

e. The unit shall be equipped with a means for the operator to easily interpret the readings in terms of the volumetric flow rate of air per minute moving through the machine at any given moment.

f. The unit shall be equipped with an electronic mechanism that automatically shuts the machine off in the event of a filter breach or absence of a filter.

g. The unit shall be equipped with an audible horn that sounds an alarm when the machine has shut itself off.

h. The unit shall be equipped with an automatic safety mechanism that prevents a worker from improperly inserting the main HEPA filter.

2.2.2.2 Auxiliary Generator

Provide an auxiliary generator with capacity to power a minimum of 50 percent of the negative air machines at any time during the work. When power fails, the generator controls shall automatically start the generator and switch the negative air pressure system machines to generator power. The generator shall not present a carbon monoxide hazard to workers.

2.2.3 Vacuum Systems

Vacuum systems shall be suitably sized for the project, and filters shall be capable of trapping and retaining all mono-disperse particles as small as 0.3 micrometers (mean aerodynamic diameter) at a minimum efficiency of 99.97 percent. Used filters that are being replaced shall be disposed in a proper manner.

2.2.4 Heat Blower Guns

Heat blower guns shall be flameless, electrical, paint-softener type with controls to limit temperature to 1,100 degrees F. Heat blower shall be DI (non-grounded) 120 volts ac, and shall be equipped with cone, fan, glass protector and spoon reflector nozzles.

PART 3 EXECUTION

3.1 WORK PROCEDURES

Perform work following practices and procedures in project work plans and the occupant protection plan.

3.1.1 Lead Hazard Control Areas, Equipment and Procedures

Set up lead hazard control areas and operate equipment within the lead hazard control area in a manner that will minimize migration of lead dust beyond the lead hazard control area boundaries.

3.1.2 Lead Hazard Control Areas

Access into lead hazard control areas by the general public shall be prohibited. Lead hazard control area preparation and restriction requirements follow:

a. Containment features for interior lead hazard control projects: Polyethylene sheeting sealed with spray adhesive and duct tape or Portable plastic partitions with Colored caution tape to designate the lead hazard control area. The floor in the lead hazard control area shall be covered with two layers of polyethylene sheeting. The entry/exit shall be sealed with a primitive air lock. Openings, such as HVAC supply and return air vents, into the lead hazard control area shall be sealed with polyethylene sheeting and duct tape or with sealed rigid coverings.

b. Containment features for exterior lead hazard control projects: Plastic sheeting or Portable partitions with Colored caution tape and A roped-off boundary perimeter, using caution tape or a barrier

installed at required distance from where the lead control work is performed.

3.1.3 Negative Air Pressure System Containment

a. The negative air pressure systems shall be operated to provide at least 10 air changes per hour inside the containment. The local exhaust unit equipment shall be operated continuously until the containment is removed. The negative air pressure system shall be smoke tested for leaks at the beginning of each shift. The certified supervisor is responsible to continuously monitor and keep a pressure differential log with an automatic manometric recording instrument. The Contracting Officer shall be notified immediately if the pressure differential falls below the prescribed minimum. Submit the continuously monitored pressure differential log, as specified. The building ventilation system shall not be used as the local exhaust system. The local exhaust system shall terminate out of doors unless the Contracting Officer allows an alternate arrangement. All filters shall be new at the beginning of the project and shall be periodically changed as necessary to maintain specified pressure differential and shall be disposed of as lead contaminated waste.

b. Discontinuing Negative Air Pressure System. The negative air pressure system shall be operated continuously during abatement activities unless otherwise authorized by the Contracting Officer. At the completion of the project, units shall be run until full cleanup has been completed and final clearance testing requirements have been met. Dismantling of the negative air pressure systems shall conform to written decontamination procedures approved by the Contracting Officer and be as presented in the Lead Hazard Control Plan. The HEPA filter machine intakes shall be sealed with polyethylene to prevent environmental contamination.

3.2 FURNISHINGS

Remove furniture and equipment from the work area before lead hazard control work begins.

3.3 LEAD-BASED PAINT ABATEMENT METHODS AND TECHNIQUES

Lead based paint abatement techniques for building components and landscape features are specified on the individual work task data element sheets at the end of this section.

3.4 CLEARANCE PROCEDURES

3.4.1 Visual Inspection

The certified supervisor shall perform a visual inspection, using the form at the end of this section, to assure that lead hazard abatement activities, identified in the individual work task data elements, have been properly completed. The certified supervisor shall visually verify that lead hazards have been abated and the area is free of dust and paint chips generated by lead hazard abatement activities.

3.4.2 Analytical Demonstration of Clearance

After the visual inspection, the independent certified risk assessor shall take clearance samples for laboratory analysis to verify clearance requirements specified in paragraph CLEARANCE REQUIREMENTS in PART 1 have been met.

3.4.3 Clearance

The certified risk assessor shall review analytical results for the samples taken to determine compliance with project specific clearance requirements. The following actions apply and shall be performed at the Contractor's expense if project specific clearance levels are exceeded:

Reclean surfaces.
Retest to determine clearance.

3.5 ABATEMENT REPORT

Submit the report, written by the certified supervisor, covering each element in 40 CFR 745, Section 227 (e) (10). The following information shall be covered in the abatement report:

a. Start and completion dates of lead hazard control activities.

b. The name and address of each firm conducting lead hazard control activities and the name of each supervisor assigned to the project.

c. The Occupant Protection Plan prepared pursuant to paragraph OCCUPANT PROTECTION PLAN in PART 1.

d. The name, address and signature of the certified risk assessor to indicating clearance requirements have been met.

e. Certification of each Final Cleaning and Visual Inspection performed by the certified supervisor.

f. The results of clearance testing and all soil analyses, and the name of each laboratory that conducted the analyses.

g. A detailed written description of the lead abatement including abatement methods used, locations of rooms and/or components where lead abatement activities occurred, reason for selecting particular abatement methods for each component, and any suggested monitoring of encapsulants or enclosures.

h. Hazardous waste disposal documentation.

i. Contractor provided installation/maintenance manuals.

3.6 CERTIFICATION OF VISUAL INSPECTION

Certify that the lead hazard control area(s) for each individual work task data elements have passed visual clearance criteria and are ready for

clearance sampling. To pass visual clearance, lead hazards have to be removed; control technology appropriately applied/installed; the lead hazard control area must be free from visible dust debris, paint chips or any other residue that may have been generated by the lead hazard control activities.

Signature by the certified supervisor indicates that the described lead hazard control area(s) have passed visual clearance criteria. Provide detailed description of each Lead Hazard Control Area.

_____

_____

_____

BY:_____
Certified Supervisor Date

Print name and title _____

CONTRACTING OFFICER ACCEPTANCE OR REJECTION

The Contracting Officer hereby determines that the Contractor has performed visual inspection of the lead hazard control area and by quality assurance inspection, finds the Contractor's work to be:

_____ Acceptable, ready for performance of clearance sampling

_____ Unacceptable, Contractor instructed to re-clean the lead hazard control area

BY: Contracting Officer's Representative

_____
Signature Date

Print name and title_____

Lead Hazard Control Clearance Sampling Certification Form

Date_____

Name of Certified Risk
Assessor_____

License No._____

Work Task Data Element _____

Sample quantity and location:
Windows _____
Floors _____
Exterior Soils _____

Date of sample collection_____Date Shipped to lab_____

Shipped by_____
Signature

I certify that the clearance samples taken meet the clearance sampling requirements of this contract.

By:_____ Date:_____
Certified Risk Assessor

Print name and Title:_____

CONTRACTING OFFICER ACCEPTANCE OR REJECTION

I have inspected sampling locations and procedures and have found them to be

_____Acceptable, meet contract requirements.

_____Unacceptable, do not meet contract requirements, Contractor is directed to resample.

By: Contracting Officer's Representative

Signature Date

Print Name and Title_____

INDIVIDUAL WORK TASK DATA ELEMENTS

Sheet _____ of _____

There is a separate data sheet for each individual work task.

WORK TASK DESIGNATION NUMBER: _____

1. LOCATION OF WORK TASK:

2. BRIEF DESCRIPTION OF THE ABATEMENT ACTIVITY:

-- End of Section --

SECTION 03 01 30.71

CONCRETE REHABILITATION
04/06

PART 1 GENERAL

1.1 REFERENCES

The publications listed below form a part of this specification to the extent referenced. The publications are referred to within the text by the basic designation only.

ASTM INTERNATIONAL (ASTM)

ASTM C117	(2013) Standard Test Method for Materials Finer than 75-um (No. 200) Sieve in Mineral Aggregates by Washing
ASTM C136	(2006) Standard Test Method for Sieve Analysis of Fine and Coarse Aggregates
ASTM C144	(2011) Standard Specification for Aggregate for Masonry Mortar
ASTM C31/C31M	(2012) Standard Practice for Making and Curing Concrete Test Specimens in the Field
ASTM C33/C33M	(2013) Standard Specification for Concrete Aggregates
ASTM C39/C39M	(2014) Standard Test Method for Compressive Strength of Cylindrical Concrete Specimens
ASTM C881/C881M	(2013) Standard Specification for Epoxy-Resin-Base Bonding Systems for Concrete

1.2 DEFINITIONS

1.2.1 Epoxy Resin Binder

A two-component epoxy bonding system in low and medium viscosities used by itself as a primer or for producing epoxy concrete or mortars when mixed with aggregate.

1.2.2 Epoxy Concrete

A combination of epoxy resin binder and fine and coarse aggregate used in the repair of spalling along joints or cracks, small surface spalls or "popouts."

1.2.3 Epoxy Mortar

A combination of epoxy resin binder and fine aggregate used in the surface repair of non-structural cracks and filling of saw kerfs.

1.2.4 Non-Pressure Epoxy Grout

A combination of epoxy resin binder, a mineral filler and a thixotropic agent used in cementing dowels in place and the repair of non-structural cracks.

1.2.5 Pressure Grouting Epoxy

A low viscosity epoxy resin system pumped under pressure into structural cracks in walls or pavements.

1.3 SUBMITTALS

Government approval is required for submittals with a "G" designation; submittals not having a "G" designation are for Contractor Quality Control approval. When used, a designation following the "G" designation identifies the office that will review the submittal for the Government. The following shall be submitted in accordance with Section 01 33 00 SUBMITTAL PROCEDURES:

SD-05 Design Data

Job mix formula

SD-06 Test Reports

Sieve analysis test for aggregate

Epoxy resin binder tests

Epoxy grout tests

SD-07 Certificates

Epoxy resin binder

Epoxy grout

SD-08 Manufacturer's Instructions; G

Epoxy repair material

Submit for mixing and applying.

1.4 QUALITY ASSURANCE

1.4.1 Design Data

1.4.1.1 Job Mix Formula; G

Submit, at least 15 days before work commences, a job-mix formula for each use of epoxy concrete or epoxy mortar. Test reports shall accompany the mix design. Identify the proposed source of the materials and state the proportions of aggregates and epoxy resin. When determining job mix, use samples of materials to be used on the job.

a. Trial batches: Perform a minimum of three trial batchings in a certified testing laboratory. Try different aggregate-resin proportions to obtain satisfactory placing and finishing characteristics but keep the proportion by weight of aggregate to epoxy resin binder at least five to one. When mixing, add the fine aggregates first, and then the coarse aggregates. The final trial batch should be sufficiently wet so that some fines will "bleed" to the surface during finishing operations.

b. Supporting criteria: Include in the submittal the following data for each trial batch:

(1) Proportions by weight

(2) Unit weights and specific gravities of constituents

(3) Batch weights

(4) Compressive strengths of 3 by 6 inch cylinders, made in accordance with ASTM C31/C31M, air cured for 7 days and tested in accordance with ASTM C39/C39M. Compressive strength shall be a minimum of 3500 psi.

(5) Curing time

1.4.2 Test Reports

1.4.2.1 Epoxy Resin Binder

Include the following:

a. Viscosity

b. Consistency

c. Gel time

d. Absorption

e. Shrinkage

f. Thermal compatibility

1.4.2.2 Epoxy Resin Grout

Include the following:

a. Epoxy number

b. Consistency

c. Compressive single shear strength

d. Pot life

1.5 DELIVERY, STORAGE, AND HANDLING

Inspect materials delivered to site for damage, unload and store with a minimum of handling. Deliver epoxy resin components and aggregate materials in original sealed containers and store in dry covered areas at temperatures below 90 degrees F. Remove from job site unused mixed materials which have reached end of working or pot life.

1.6 WEATHER LIMITATIONS

Halt work when weather conditions detrimentally affect the quality of patching or bonding concrete. Apply epoxy resin materials only when the contact surfaces are completely dry and if the atmospheric and surface temperature ranges are suitable for the specified epoxy material. Follow manufacturer's instructions for weather conditions and temperature ranges.

1.7 TRAFFIC CONTROL

Do not permit vehicular or heavy equipment traffic on the pavement in the work area during the curing period. At the end of the curing period, light local traffic may be permitted on the pavement if approved by the Contracting Officer.

1.8 EQUIPMENT

Use a container recommended by the epoxy manufacturer as the mixing vessel. Use a power drive (air or spark-proof) propeller type blade for mixing except that hand mixing may be used for small batches. Use equipment specified by epoxy manufacturer for field mixing of aggregates and epoxy resin.

PART 2 PRODUCTS

2.1 MATERIALS

2.1.1 Epoxy

2.1.1.1 Epoxy Resin Binder for Concrete and Mortar

ASTM C881/C881M, Type III, Grade 1, Class B without mineral filler. For walls and ceilings use ASTM C881/C881M, Type III, Grade 3, Class B with filler.

2.1.1.2 Non-Pressure Epoxy Grout

ASTM C881/C881M Type IV, Grade 2, Class B with or without mineral filler.

2.1.1.3 Crack Sealer for Pressure Grouting

ASTM C881/C881M, Type IV, Grade 1, Class B without filler.

2.1.1.4 Crack Surface Sealer for Pressure Grouting

ASTM C881/C881M, Type IV, Grade 3, Class B with mineral filler.

2.1.2 Aggregate

For material passing No. 200 sieve provide a non-plastic material composed of a minimum of 75 percent limestone dust, talc or silica inert filler. Provide dry aggregate.

a. For epoxy concrete: ASTM C33/C33M, maximum size ½ inch.

b. For epoxy mortar: ASTM C144, maximum size no. 40 sieve.

PART 3 EXECUTION

This section applies to all Repair and New cementitious surfaces including but not exclusively: Concrete, Stucco over Masonry, Stucco over Concrete or Stucco and Concrete Surfaces in general.

3.1 PREPARATION

3.1.1 Epoxy Concrete

3.1.1.1 Patch Areas

Remove loose concrete from the spalled areas indicated. Inspect the cavity for remaining defective concrete by tapping with a hammer or steel rod and listening for dull or hollow sounds. In areas where tapping does not produce a solid tone, remove additional concrete until testing produces a solid tone. Make the entire cavity at least one inch deep. Sawcut edges of cavity to avoid feather edging. Prepare surface of cavity by sandblasting, grinding, or water blasting. Remove dust, dirt, and loosely bonded material resulting from cleaning. Ensure cavity surfaces are dry.

3.1.1.2 Spalls at Joints and Cracks

For spalls to be repaired that are adjacent to joints and working cracks insert preformed joint filler to the working faces of the spall. Trim

filler to fit shape of the working faces of joint or crack so epoxy material is prevented from bypassing filler. Where practicable, extend filler horizontally and vertically into joint or crack opening. Secure filler strip in place prior to and during placement of epoxy concrete. Apply a bond breaker to working faces at keyed joints. Keep bond breaker off of concrete surface to be bonded. After the epoxy concrete has completely cured, saw out the top one inch of the preformed joint filler and install liquid joint sealer.

3.1.1.3 Joints and Cracks

Clean and seal joints and cracks.

3.1.2 Epoxy Mortar for Cracks and Saw Kerfs

Apply epoxy mortar to newly exposed loose and unsound materials. Prepare surfaces by sandblasting, scarifying or waterblasting. Remove dust, dirt, and loosely bonded material resulting from cleaning. Ensure surfaces are dry before application of epoxy mortar.

3.1.3 Epoxy Grout for Cracks

Apply grout to newly exposed concrete free of loose and unsound materials. Prepare surfaces by sandblasting, scarifying or waterblasting. Remove dust, dirt, and loosely bonded material resulting from cleaning. Ensure surfaces are dry before application of epoxy grout.

3.2 MIXING MATERIALS

Make batches small enough to ensure placement before binder sets. Mix materials in accordance with manufacturer's recommendations.

3.3 PLACEMENT

3.3.1 Epoxy Concrete

Prime dry cavity surfaces with epoxy resin binder using a stiff bristle brush. Make coating approximately 20 mils thick. Place epoxy concrete while primer is still tacky and in layers not exceeding one inch thick. Use vibratory floats, plates, or hand tampers to consolidate the concrete. Level each layer and screed the final surface to match the adjoining surfaces. Remove excess epoxy concrete on adjacent surfaces before the concrete hardens. Do not feather epoxy concrete out onto adjacent surfaces.

3.3.2 Epoxy Mortar

Prime surfaces with epoxy resin binder. Scrub prime coat into surface with a stiff bristle brush. Make coating approximately 20 mils thick. Place epoxy mortar while primer is still tacky. Apply at a thickness recommended by the manufacturer. Work mortar into place and consolidate thoroughly so that contact surfaces are wetted by the mortar. Finish surface of mortar to the required texture. Do not feather edge epoxy mortar onto adjacent surfaces.

3.3.3 Non-Pressure Epoxy Grout

3.3.3.1 Cementing Dowels

Immediately prior to placing the dowel, clean hole of dust and other deleterious material with a high pressure air hose. Fill hole halfway with grout. Insert dowel in hole by rotating it at least one complete turn while tapping it down. If necessary add more grout to fill hole.

3.3.3.2 Epoxy Grout for Cracks

Apply epoxy grout at a thickness recommended by the manufacturer. Work grout into place and consolidate thoroughly so that contact surfaces are wetted by the grout. Finish surface of grout to the required texture. Do not feather edge epoxy grout onto adjacent surfaces.

3.3.4 Pressure Grouting of Cracks

Clean each crack of dust, dirt, loose concrete and unsound material. Insert a valve at both ends of each crack, at the junction of two cracks, and along the length of each crack at 16 to 20 inch intervals. Fill crack between valves with crack surface sealer. After crack surface sealer has hardened and cured, pump crack sealer into valve at one end of crack. For vertical surfaces start at lowest valve and work upwards. As crack sealer appears at next valve, pinch closed pumping valve and move to next valve and commence pumping. Continue procedure until other end of crack is reached. Avoid delays in pumping operation. After crack sealer has hardened and cured grind valves off flush with concrete surface. Coat areas of valves with crack surface sealer and allow to harden and cure.

3.4 CURING

Cure epoxy materials in accordance with manufacturer's recommendations.

3.5 FIELD QUALITY CONTROL

3.5.1 Sampling

As soon as epoxy resin and aggregate materials are available for sampling, obtain by random selection a sample of each batch. Clearly identify samples by designated name, specification number, batch number, project contract number, intended use and quantity involved.

3.5.2 Testing

Test samples by an approved laboratory. If a sample fails to meet specification requirements after two tests, replace the batch represented by the samples tested and retest. Test aggregates in accordance with ASTM C117 and ASTM C136.

3.5.3 Inspection

Check each repaired area for cracks, spalls, popouts and loss of bond between repaired area and surrounding concrete. Check each repaired area

for voids by tapping with a hammer or steel rod and listening for dull or hollow sounds. Immediately repair defects.

-- End of Section --

SECTION 07 60 00

FLASHING AND SHEET METAL
08/08

PART 1 GENERAL

1.1 REFERENCES

The publications listed below form a part of this specification to the extent referenced. The publications are referred to within the text by the basic designation only.

AMERICAN WELDING SOCIETY (AWS)

AWS D1.2/D1.2M	(2008) Structural Welding Code - Aluminum

ASTM INTERNATIONAL (ASTM)

ASTM A167	(1999; R 2009) Standard Specification for Stainless and Heat-Resisting Chromium-Nickel Steel Plate, Sheet, and Strip
ASTM A308/A308M	(2010) Standard Specification for Steel Sheet, Terne (Lead-Tin Alloy) Coated by the Hot Dip Process
ASTM A653/A653M	(2013) Standard Specification for Steel Sheet, Zinc-Coated (Galvanized) or Zinc-Iron Alloy-Coated (Galvannealed) by the Hot-Dip Process
ASTM B101	(2012) Standard Specification for Lead-Coated Copper Sheet and Strip for Building Construction
ASTM B209	(2010) Standard Specification for Aluminum and Aluminum-Alloy Sheet and Plate
ASTM B209M	(2013) Standard Specification for Aluminum and Aluminum-Alloy Extruded Bars, Rods, Wire, Profiles, and Tubes (Metric)
ASTM B221	(2013) Standard Specification for Aluminum and Aluminum-Alloy Extruded Bars, Rods, Wire, Profiles, and Tubes
ASTM B32	(2008) Standard Specification for Solder Metal
ASTM B370	(2012) Standard Specification for Copper Sheet and Strip for Building Construction

ASTM B69	(2013) Standard Specification for Rolled Zinc
ASTM D1784	(2011) Standard Specification for Rigid Poly (Vinyl Chloride) (PVC) Compounds and Chlorinated Poly(Vinyl Chloride) (CPVC) Compounds
ASTM D226/D226M	(2009) Standard Specification for Asphalt-Saturated Organic Felt Used in Roofing and Waterproofing
ASTM D41/D41M	(2011) Asphalt Primer Used in Roofing, Damp proofing, and Waterproofing
ASTM D4586/D4586M	(2007; E 2012; R 2012) Asphalt Roof Cement, Asbestos-Free

SHEET METAL AND AIR CONDITIONING CONTRACTORS' NATIONAL ASSOCIATION (SMACNA)

SMACNA 1793	(2012) Architectural Sheet Metal Manual, 6th Edition

SINGLE PLY ROOFING INDUSTRY (SPRI)

ANSI/SPRI RD-1	(2009) Performance Standard for Retrofit Drains

1.2 GENERAL REQUIREMENTS

Finished sheet metalwork will form a weather tight construction without waves, warps, buckles, fastening stresses or distortion, which allows for expansion and contraction. Sheet metal mechanic is responsible for cutting, fitting, drilling, and other operations in connection with sheet metal required to accommodate the work of other trades. Coordinate installation of sheet metal items used in conjunction with roofing with roofing work to permit continuous roofing operations.

1.3 SUBMITTALS

Government approval is required for submittals with a "G" designation; submittals not having a "G" designation are for Contractor Quality Control approval. Submit the following in accordance with Section 01 33 00 SUBMITTAL PROCEDURES:

SD-02 Shop Drawings

Covering on flat, sloped, or curved surfaces;
Gutters;
Downspouts;
Expansion joints;
Gravel stops and fascias;
Splash pans;

Flashing for roof drains;
Base flashing;

Counterflashing;
Flashing at roof penetrations;
Reglets;
Scuppers;
Copings;
Drip edge;
Conductor heads;
Open valley flashing;
Eave flashing;

Indicate thicknesses, dimensions, fastenings and anchoring methods, expansion joints, and other provisions necessary for thermal expansion and contraction. Scaled manufacturer's catalog data may be submitted for factory fabricated items.

SD-11 Closeout Submittals

Quality Control Plan

Submit for sheet metal work in accordance with paragraph entitled "Field Quality Control."

1.4 DELIVERY, HANDLING, AND STORAGE

Package and protect materials during shipment. Uncrate and inspect materials for damage, dampness, and wet-storage stains upon delivery to the job site. Remove from the site and replace damaged materials that cannot be restored to like-new condition. Handle sheet metal items to avoid damage to surfaces, edges, and ends. Store materials in dry, weather-tight, ventilated areas until immediately before installation.

PART 2 PRODUCTS

2.1 MATERIALS

Do not use lead, lead-coated metal, or galvanized steel. Use any metal listed by SMACNA Arch. Manual for a particular item, unless otherwise specified or indicated. Conform to the requirements specified and to the thicknesses and configurations established in SMACNA Arch. Manual for the materials. Different items need not be of the same metal, except that if copper is selected for any exposed item, all exposed items must be copper.

Furnish sheet metal items in 8 to 10 foot lengths. Single pieces less than 8 feet long may be used to connect to factory-fabricated inside and outside corners, and at ends of runs. Factory fabricate corner pieces with minimum 12 inch legs. Provide accessories and other items essential to complete the sheet metal installation. Provide accessories made of the same or compatible materials as the items to which they are applied. Fabricate sheet metal items of the materials specified below and to the gage, thickness, or weight shown in Table I at the end of this section. Provide sheet metal items with mill finish unless specified otherwise. Where more than one

material is listed for a particular item in Table I, each is acceptable and may be used except as follows:

2.1.1 Exposed Sheet Metal Items

Must be of the same material. Consider the following as exposed sheet metal: gutters, including hangers; downspouts; gravel stops and fascias; cap, valley, steeped, base, and eave flashings and related accessories.

2.1.2 Drainage

Do not use copper for an exposed item if drainage from that item will pass over exposed masonry, stonework or other metal surfaces. In addition to the metals listed in Table I, lead-coated copper may be used for such items.

2.1.3 Copper, Sheet and Strip

ASTM B370, cold-rolled temper, H 00 (standard).

2.1.4 Lead-Coated Copper Sheet

ASTM B101.

2.1.5 Lead Sheet

Minimum weight 4 pounds per square foot.

2.1.6 Steel Sheet, Zinc-Coated (Galvanized)

ASTM A653/A653M.

2.1.6.1 Finish

Exposed exterior items of zinc-coated steel sheet must have a baked-on, factory-applied color coating of polyvinylidene fluoride or other equivalent fluorocarbon coating applied after metal substrates have been cleaned and pretreated. Provide finish coating dry-film thickness of 0.8 to 1.3 mils and color selected.

2.1.7 Zinc Sheet and Strip

ASTM B69, Type I, a minimum of 0.024 inch thick.

2.1.8 Stainless Steel

ASTM A167, Type 302 or 304, 2D Finish, fully annealed, dead-soft temper.

2.1.9 Terne-Coated Steel

Minimum of 14 by 20 inch with minimum of 40 pound coating per double base box. ASTM A308/A308M.

2.1.10 Aluminum Alloy Sheet and Plate

ASTM B209 anodized color to match existing form alloy, and temper appropriate for use.

2.1.10.1 Alclad

When fabricated of aluminum, fabricate the items Alclad 3003, Alclad 3004, Alclad 3005, clad on both sides unless otherwise indicated.

a. Gutters, downspouts, and hangers

b. Gravel stops and fascias

c. Flashing

2.1.10.2 Finish

Exposed exterior sheet metal items of aluminum must have a baked-on, factory-applied color coating of polyvinylidene fluoride (PVF2) or other equivalent fluorocarbon coating applied after metal substrates have been cleaned and pretreated. Provide finish coating dry-film thickness of 0.8 to 1.3 mils and color of existing construction.

2.1.11 Aluminum Alloy, Extruded Bars, Rods, Shapes, and Tubes

ASTM B221M ASTM B221.

2.1.12 Solder

ASTM B32, 95-5 tin-antimony.

2.1.13 Polyvinyl Chloride Reglet

ASTM D1784, Type II, Grade 1, Class 14333-D, 0.075 inch minimum thickness.

2.1.14 Bituminous Plastic Cement

ASTM D4586/D4586M, Type I.

2.1.15 Roofing Felt

ASTM D226/D226M Type II.

2.1.16 Asphalt Primer

ASTM D41/D41M.

2.1.17 Fasteners

Use the same metal or a metal compatible with the item fastened. Use stainless steel fasteners to fasten dissimilar materials.

PART 3 EXECUTION

3.1 INSTALLATION

3.1.1 Metals

3.1.2 Workmanship

Make lines and angles sharp and true. Free exposed surfaces from visible wave, warp, buckle, and tool marks. Fold back exposed edges neatly to form a 1/2 inch hem on the concealed side. Make sheet metal exposed to the weather watertight with provisions for expansion and contraction.

Make surfaces to receive sheet metal plumb and true, clean, even, smooth, dry, and free of defects and projections. For installation of items not shown in detail or not covered by specifications conform to the applicable requirements of SMACNA 1793, Architectural Sheet Metal Manual. Provide sheet metal flashing in the angles formed where roof decks abut walls, curbs, ventilators, pipes, or other vertical surfaces and wherever indicated and necessary to make the work watertight. Join sheet metal items together as shown in Table II.

3.1.3 Nailing

Confine nailing of sheet metal generally to sheet metal having a maximum width of 18 inch. Confine nailing of flashing to one edge only. Space nails evenly not over 3 inch on center and approximately 1/2 inch from edge unless otherwise specified or indicated. Face nailing will not be permitted. Where sheet metal is applied to other than wood surfaces, include in shop drawings, the locations for sleepers and nailing strips required to secure the work.

3.1.4 Cleats

Provide cleats for sheet metal 18 inch and over in width. Space cleats evenly not over 12 inch on center unless otherwise specified or indicated. Unless otherwise specified, provide cleats of 2 inch wide by 3 inch long and of the same material and thickness as the sheet metal being installed. Secure one end of the cleat with two nails and the cleat folded back over the nailheads. Lock the other end into the seam. Where the fastening is to be made to concrete or masonry, use screws and drive in expansion shields set in concrete or masonry. Pretin cleats for soldered seams.

3.1.5 Bolts, Rivets, and Screws

Install bolts, rivets, and screws where indicated or required. Provide compatible washers where required to protect surface of sheet metal and to provide a watertight connection. Provide mechanically formed joints in aluminum sheets 0.040 inch or less in thickness.

3.1.6 Seams

Straight and uniform in width and height with no solder showing on the face.

3.1.6.1 Flat-lock Seams

Finish not less than 3/4 inch wide.

3.1.6.2 Lap Seams

Finish soldered seams not less than one inch wide. Overlap seams not soldered, not less than 3 inch.

3.1.6.3 Loose-Lock Expansion Seams

Not less than 3 inch wide; provide minimum one inch movement within the joint. Completely fill the joints with the specified sealant, applied at not less than 1/8 inch thick bed.

3.1.6.4 Standing Seams

Not less than one inch high, double locked without solder.

3.1.6.5 Flat Seams

Make seams in the direction of the flow.

3.1.7 Soldering

Where soldering is specified, apply to copper, terne-coated stainless steel, zinc-coated steel, and stainless steel items. Pretin edges of sheet metal before soldering is begun. Seal the joints in aluminum sheets of 0.040 inch or less in thickness with specified sealants. Do not solder aluminum.

3.1.7.1 Edges

Scrape or wire-brush the edges of lead-coated material to be soldered to produce a bright surface. Flux brush the seams in before soldering. Treat with soldering acid flux the edges of stainless steel to be pretinned. Seal the joints in aluminum sheets of 0.040 inch or less in thickness with specified sealants. Do not solder aluminum.

3.1.8 Welding and Mechanical Fastening

Use welding for aluminum of thickness greater than 0.040 inch. Aluminum 0.040 inch or less in thickness must be butted and the space backed with formed flashing plate; or lock joined, mechanically fastened, and filled with sealant as recommended by the aluminum manufacturer.

3.1.8.1 Welding of Aluminum

Use welding of the inert gas, shield-arc type. For procedures, appearance and quality of welds, and the methods used in correcting welding work, conform to AWS D1.2/D1.2M.

3.1.8.2 Mechanical Fastening of Aluminum

Use No. 12, aluminum alloy, sheet metal screws or other suitable aluminum alloy or stainless steel fasteners. Drive fasteners in holes made with a No. 26 drill in securing side laps, end laps, and flashings. Space fasteners 12 inch maximum on center. Where end lap fasteners are required to improve closure, locate the end lap fasteners not more than 2 inch from the end of the overlapping sheet.

3.1.9 Protection from Contact with Dissimilar Materials

3.1.9.1 Copper or Copper-bearing Alloys

Paint with heavy-bodied bituminous paint surfaces in contact with dissimilar metal, or separate the surfaces by means of moistureproof building felts.

3.1.9.2 Aluminum

Do not allow aluminum surfaces in direct contact with other metals except stainless steel, zinc, or zinc coating. Where aluminum contacts another metal, paint the dissimilar metal with a primer followed by two coats of aluminum paint. Where drainage from a dissimilar metal passes over aluminum, paint the dissimilar metal with a non-lead pigmented paint.

3.1.9.3 Metal Surfaces

Paint surfaces in contact with mortar, concrete, or other masonry materials with alkali-resistant coatings such as heavy-bodied bituminous paint.

3.1.9.4 Wood or Other Absorptive Materials

Paint surfaces that may become repeatedly wet and in contact with metal with two coats of aluminum paint or a coat of heavy-bodied bituminous paint.

3.1.10 Expansion and Contraction

Provide expansion and contraction joints at not more than 32 foot intervals for aluminum and at not more than 40 foot intervals for other metals. Provide an additional joint where the distance between the last expansion joint and the end of the continuous run is more than half the required interval. Space joints evenly. Join extruded aluminum gravel stops and fascias by expansion and contraction joints spaced not more than 12 feet apart.

3.1.11 Base Flashing

Lay the base flashings with each course of the roof covering, shingle fashion, where practicable, where sloped roofs abut chimneys, curbs, walls,

or other vertical surfaces. Extend up vertical surfaces of the flashing not less than 8 inch and not less than 4 inch under the roof covering. Where finish wall coverings form a counterflashing, extend the vertical leg of the flashing up behind the applied wall covering not less than 6 inch. Overlap the flashing strips with the previously laid flashing not less than 3 inch.

Fasten the strips or shingles at their upper edge to the deck. Horizontal flashing at vertical surfaces must extend vertically above the roof surface and fastened at their upper edge to the deck a minimum of 6 inch on center with large headed aluminum roofing nails or hex headed, galvanized shielded screws a minimum of 2-inch lap of any surface. Solder end laps and provide for expansion and contraction. Extend the metal flashing over crickets at the up-slope side of chimneys, curbs, and similar vertical surfaces extending through sloping roofs, the metal flashings. Extend the metal flashings onto the roof covering not less than 4.5 inch at the lower side of dormer walls, chimneys and similar vertical surfaces extending through the roof decks. Install and fit the flashings so as to be completely weathertight. Provide factory-fabricated base flashing for interior and exterior corners. Do not use metal base flashing on built-up roofing.

3.1.12 Counterflashing

Except where indicated or specified otherwise, insert counterflashing in reglets located from 9 to 10 inch above roof decks, extend down vertical surfaces over upturned vertical leg of base flashings not less than 3 inch. Fold the exposed edges of counterflashings 1/2 inch. Where stepped counterflashings are required, they may be installed in short lengths a minimum 8 inch by 8 inch or may be of the preformed one-piece type. Provide end laps in counterflashings not less than 3 inch and make it weathertight with plastic cement. Do not make lengths of metal counterflashings exceed 10 feet. Form the flashings to the required shapes before installation. Factory-form the corners not less than 12 inch from the angle. Secure the flashings in the reglets with lead wedges and space not more than 18 inch apart; on chimneys and stair/elevator towers short runs, place wedges closer together. Fill caulked-type reglets or raked joints which receive counterflashing with caulking compound. Turn up the concealed edge of counterflashings built into masonry or concrete walls not less than 1/4 inch and extend not less than 2 inch into the walls. Install counterflashing to provide a spring action against base flashing. Where bituminous base flashings are provided, extend down the counter flashing as close as practicable to the top of the cant strip. Factory form counter flashing to provide spring action against the base flashing.

3.1.13 Metal Reglets

Provide factory fabricated caulked type or friction type reglets with a minimum opening of 1/4 inch and a depth of 1 1/4 inch, as approved.

3.1.13.1 Caulked Reglets

Provide with rounded edges and metal strap brackets or other anchors for securing to the concrete forms. Provide reglets with a core to protect them from injury during the installation. Provide built-up mitered corner pieces for internal and external angles. Wedge the flashing in the reglets with lead wedges every 18 inch, caulked full and solid with an approved compound.

3.1.13.2 Friction Reglets

Provide with flashing receiving slots not less than 5/8 inch deep, one inch jointing tongues, and upper and lower anchoring flanges installed at 24 inch maximum snaplock receiver. Insert the flashing the full depth of the slot

and lock by indentations made with a dull-pointed tool, wedges, and filled with a sealant. For friction reglets, install flashing snaplock receivers at 24 inch on center maximum. When the flashing has been inserted the full depth, caulk the slot and lock with wedges and fill with sealant.

3.1.14 Polyvinyl Chloride Reglets Temporary Construction Installation

Rigid polyvinyl chloride reglets ASTM D1784, Type II, Grade 1, Class 14333-D, 0.075 inch minimum thickness may be provided in lieu of metal reglets for temporary construction.

3.1.15 Gravel Stops and Fascias

Prefabricate in the shapes and sizes indicated and in lengths not less that 8 feet. Extend flange at least 4 inch onto roofing. Provide prefabricated, mitered corners internal and external corners. Install gravel stops and fascias after all plies of the roofing membrane have been applied, but before the flood coat of bitumen is applied. Prime roof flange of gravel stops and fascias on both sides with an asphalt primer. After primer has dried, set flange on roofing membrane and strip-in.Nail flange securely to wood nailer with large-head, barbed-shank roofing nails 1.5 inch long spaced not more than 3 inch on center, in two staggered rows.

3.1.15.1 Edge Strip

Hook the lower edge of fascias at least 3/4 inch over a continuous strip of the same material bent outward at an angle not more than 45 degrees to form a drip. Nail hook strip to a wood nailer at 6 inch maximum on center. Where fastening is made to concrete or masonry, use screws spaced 12 inch on center driven in expansion shields set in the concrete or masonry. Where horizontal wood nailers are slotted to provide for insulation venting, install strips to prevent obstruction of vent slots. Where necessary, install strips over 1/16 inch thick compatible spacer or washers.

3.1.15.2 Joints

Leave open the section ends of gravel stops and fascias 1/4 inch and backed with a formed flashing plate, mechanically fastened in place and lapping each section end a minimum of 4 inch set laps in plastic cement. Face nailing will not be permitted. Install prefabricated aluminum gravel stops and fascias in accordance with the manufacturer's printed instructions and details.

3.1.16 Metal Drip Edge

Provide a metal drip edge, designed to allow water run-off to drip free of underlying construction, at eaves and rakes prior to the application of roofing shingles. Apply directly on the wood deck at the eaves and over the underlay along the rakes. Extend back from the edge of the deck not more than 3 inch and secure with compatible nails spaced not more than 10 inch on center along upper edge.

3.1.17 Gutters

The hung type of shape indicated and supported on underside by brackets that permit free thermal movement of the gutter. Provide gutters in sizes indicated complete with mitered corners, end caps, outlets, brackets, and other accessories necessary for installation. Bead with hemmed edge or reinforce the outer edge of gutter with a stiffening bar not less than 3/4 by 3/16 inch of material compatible with gutter. Fabricate gutters in sections not less than 8 feet. Lap the sections a minimum of one inch in the direction of flow or provide with concealed splice plate 6 inch minimum. Join the gutters, other than aluminum, by riveted and soldered joints. Join aluminum gutters with riveted sealed joints. Provide expansion-type slip joints midway between outlets. Install gutters below slope line of the roof. Support gutters on adjustable hangers spaced not more than 30 inch on center and or by cleats spaced not less than 36 inch apart. Adjust gutters to slope uniformly to outlets, with high points occurring midway between outlets. Fabricate hangers and fastenings from metals.

3.1.18 Downspouts

Space supports for downspouts according to the manufacturer's recommendation for the wood masonry or steel substrate. Types, shapes and sizes are indicated. Provide complete including elbows and offsets. Provide downspouts in approximately 10 foot lengths. Provide end joints to telescope not less than 1/2 inch and lock longitudinal joints. Provide gutter outlets with wire ball strainers for each outlet. Provide strainers to fit tightly into outlets and be of the same material used for gutters. Keep downspouts not less than one inch away from walls. Fasten to the walls at top, bottom, and at an intermediate point not to exceed 5 feet on center with leader straps or concealed rack-and-pin type fasteners. Form straps and fasteners of metal compatible with the downspouts.

3.1.18.1 Terminations

Neatly fit into the drainage connection the downspouts terminating in drainage lines and fill the joints with a portland cement mortar cap sloped away from the downspout. Provide downspouts terminating in splash blocks with elbow-type fittings. Provide splash pans as specified.

3.1.19 Flashing for Roof Drains

Provide a 30 inch square sheet indicated. Taper insulation to drain from 24 inch out. Set flashing on finished felts in a full bed of asphalt roof cement, ASTM D4586/D4586M. Heavily coat the drain flashing ring with asphalt roof cement. Clamp the roof membrane, flashing sheet, and stripping felt in the drain clamping ring. Secure clamps so that felts and drain flashing are free of wrinkles and folds. Retrofit roof drains must conform to ANSI/SPRI RD-1.

3.1.20 Scuppers

Line interior of scupper openings with sheet metal. Extend the lining through and project outside of the wall to form a drip on the bottom edge and form to return not less than one inch against the face of the outside

wall at the top and sides. Fold outside edges under 1/2 inch on all sides. Provide the perimeter of the lining approximately 1/2 inch less than the perimeter of the scupper. Join the top and sides of the lining on the roof deck side to a closure flange by a locked and soldered joint. Join the bottom edge by a locked and soldered joint to the closure flange, where required, form with a ridge to act as a gravel stop around the scupper inlet. Provide surfaces to receive the scupper lining and coat with bituminous plastic cement.

3.1.21 Conductor Heads

Type indicated and fabricated of the same material as the downspouts. Set the depth of top opening equal to two-thirds of the width. Provide outlet tubes not less than 4 inch long. Flat-lock solder the seams. Where conductor heads are used in conjunction with scuppers, set the conductor a minimum of 2 inch wider than the scupper. Attach conductor heads to the wall with masonry fasteners, and loose-lock to provide conductor heads with screens of the same material. Securely fasten screens to the heads.

3.1.22 Splash Pans

Install splash pans where downspouts discharge on roof surfaces and at other locations as indicated. Unless otherwise shown, provide pans not less than 24 inch long by 18 inch wide with metal ribs across the bottom of the pan. Form the sides of the pan with vertical baffles not less than one inch high in the front, and 4 inch high in the back doubled over and formed continuous with horizontal roof flanges not less than 4 inch wide. Bend the rear flange of the pan to contour of cant strip and extend up 6 inch under the side wall covering or to height of base flashing under counterflashing. Bed the pans and roof flanges in plastic bituminous cement and strip-flash as specified.

3.1.23 Open Valley Flashing

Provide valley flashing free of longitudinal seams, of width sufficient to extend not less than 6 inch under the roof covering on each side. Provide a 1/2 inch fold on each side of the valley flashing. Lap the sheets not less than 6 inch in the direction of flow and secure to roofing construction with cleats attached to the fold on each side. Nail the tops of sheets to roof sheathing. Space the cleats not more than 12 inch on center. Provide exposed flashing not less than 4 inch in width at the top and increase one inch in width for each additional 8 feet in length. Where the slope of the valley is 4.5 inch or less per foot, or the intersecting roofs are on different slopes, provide an inverted V-joint, one inch high, along the centerline of the valley; and extend the edge of the valley sheets 8 inch under the roof covering on each side.

3.1.24 Eave Flashing

One piece in width, applied in 8 to 10 foot lengths with expansion joints spaced as specified in paragraph entitled "Expansion and Contraction." Provide a 3/4 inch continuous fold in the upper edge of the sheet to engage cleats spaced not more than 10 inch on center. Locate the upper edge of flashing not less than 18 inch from the outside face of the building, measured along the roof slope. Fold lower edge of the flashing over and

loose-lock into a continuous edge strip on the fascia. Where eave flashing intersects metal valley flashing, secure with one inch flat locked joints with cleats that are 10 inch on center.

3.1.25 Sheet Metal Covering on Flat, Sloped, or Curved Surfaces

Except as specified or indicated otherwise, cover and flash all minor flat, sloped, or curved surfaces such as crickets, bulkheads, dormers and small decks with metal sheets of the material used for flashing; maximum size of sheets, 16 by 18 inch. Fasten sheets to sheathing with metal cleats. Lock seams and solder. Lock aluminum seams as recommended by aluminum manufacturer. Provide an underlayment of roofing felt for all sheet metal covering.

3.1.26 Expansion Joints

Provide expansion joints for roofs, walls, and floors as existing and as following: Provide expansion joints in continuous sheet metal at 40 foot intervals for copper and stainless steel and at 32 foot intervals for aluminum, aluminum gravel stops and fascias which must have expansion joints at not more than 12 foot spacing. Provide evenly spaced joints. Provide an additional joint where the distance between the last expansion joint and the end of the continuous run is more than half the required interval spacing. Conform to the requirements of Table I.

3.1.26.1 Roof Expansion Joints

Consist of curb with wood nailing members on each side of joint, bituminous base flashing, metal counterflashing, and metal joint cover. Bituminous base flashing is specified in Roofing Section. Provide counterflashing as specified in paragraph "Counterflashing," except as follows: Provide counterflashing with vertical leg of suitable depth to enable forming into a horizontal continuous cleat. Secure the inner edge to the nailing member. Make the outer edge projection not less than one inch for flashing on one side of the expansion joint and be less than the width of the expansion joint plus one inch for flashing on the other side of the joint. Hook the expansion joint cover over the projecting outer edges of counterflashing. Provide roof joint with a joint cover of the width indicated. Hook and lock one edge of the joint cover over the shorter projecting flange of the continuous cleat, and the other edge hooked over and loose locked with the longer projecting flange. . Joints are specified in Table II.

3.1.26.2 Floor and Wall Expansion Joints

Provide U-shape with extended flanges for expansion joints in concrete and masonry walls and in floor slabs.

3.1.27 Flashing at Roof Penetrations and Equipment Supports

Provide metal flashing for all penetrations including but not exclusively: pipes, ducts, and conduits projecting through the roof surface and for equipment supports, guy wire anchors, and similar items supported by or attached to the roof deck.

3.1.28 Single Pipe Vents

See Table I, footnote (d). Set flange of sleeve in bituminous plastic cement and nail 3 inch on center. Bend the top of sleeve over and extend down into the vent pipe a minimum of 2 inch. For long runs or long rises above the deck, where it is impractical to cover the vent pipe with lead, use a two-piece formed metal housing. Set metal housing with a metal sleeve having a 4 inch roof flange in bituminous plastic cement and nailed 3 inch on center. Extend sleeve a minimum of 8 inch above the roof deck and lapped a minimum of 3 inch by a metal hood secured to the vent pipe by a draw band. Seal the area of hood in contact with vent pipe with an approved sealant.

3.1.29 Stepped Flashing

Stepped flashing shall be installed where sloping roofs surfaced with shingles abut vertical surfaces. Separate pieces of base flashing shall be placed in alternate shingle courses.

3.1.30 Copings

Provide coping using copper sheets 8 or 10 feet long joined by a 3/4 inch locked and soldered seam. Terminate outer edges in edge strips. Install with sealed lap joints.

3.2 PAINTING

Field-paint sheet metal for separation of dissimilar materials.

3.2.1 Aluminum Surfaces

Shall be solvent cleaned and given one coat of zinc-molybdate primer and one coat of aluminum paint.

3.3 CLEANING

Clean exposed sheet metal work at completion of installation. Remove grease and oil films, handling marks, contamination from steel wool, fittings and drilling debris, and scrub-clean. Free the exposed metal surfaces of dents, creases, waves, scratch marks, and solder or weld marks.

3.4 REPAIRS TO FINISH

Scratches, abrasions, and minor surface defects of finish may be repaired in accordance with the manufacturer's printed instructions and as approved. Repair damaged surfaces caused by scratches, blemishes, and variations of color and surface texture. Replace items which cannot be repaired.

3.5 FIELD QUALITY CONTROL

Establish and maintain a Quality Control Plan for sheet metal used in conjunction with roofing to assure compliance of the installed sheet metalwork with the contract requirements. Remove work that is not in

compliance with the contract and replace or correct. Include quality control, but not be limited to, the following:

a. Observation of environmental conditions; number and skill level of sheet metal workers; condition of substrate.

b. Verification that specified material is provided and installed.

c. Inspection of sheet metalwork, for proper size(s) and thickness(es), fastening and joining, and proper installation.

3.5.1 Procedure

Submit for approval prior to start of roofing work. Include a checklist of points to be observed. Document the actual quality control observations and inspections. Furnish a copy of the documentation to the Contracting Officer at the end of each day.

TABLE I. SHEET METAL WEIGHTS, THICKNESSES, AND GAGES

Sheet Metal Items	Copper, Ounces Per Square Foot	Aluminum, Inch	Stainless Steel, Inch	Terne-Coated Steel, Inch	Zinc-Coated Steel, U.S. Std. Gage
Building Expansion Joints					
Cover.....	16	.032	.015	.015	24
Waterstop-bellows or flanged, U-type.....	16	-	.015	.015	-
Covering on minor flat, pitched or curved surfaces.....	20	.040	.018	.018	-
Downspouts and leaders.....	16	.032	.015	.015	24
Downspout clips and anchors.....	-	.040 clip	-	-	-
	-	.125 anchor	-	-	-
Downspout straps, 2-inch.....	48(a)	.060	.050	-	-
Conductor heads.....	16	.032	.015	.015	-
Scupper lining.....	20	.032	.015	.015	-
Strainers, wire diameter or gage....	No. 9 gage	.144 diameter	.109 diameter		-
Flashings:					
Base.....	20	.040	.018	.018	24
Cap (Counter-flashing)	16	.032	.015	.015	26
Eave.....	16	-	.015	.015	24
Spandrel beam.....	10	-	.010	.010	-
Bond barrier.....	16	-	.015	.015	-
Stepped.....	16	.032	.015	.015	-
Valley.....	16	.032	.015	.015	-
Roof drain.....	16(b)				

Pipe vent sleeve(d)					
Coping.....	16	-	-	-	-
Gravel stops and fascias:					
Extrusions.....	-	.075	-	-	-
Sheets, corrugated.....	16	.032	.015	.015	-
Sheets, smooth.....	20	.050	.018	.018	24
Edge strip.....	24	.050	.025	-	-
Gutters:					
Gutter section.....	16	.032	.015	.015	24
Continuous cleat.....	16	.032	.015	.015	24
Hangers, dimensions.....	1 inch by 1/8 inch	1 inch by .080 inch	1 inch by .037 inch	-	-
	(a)	(c)			
Joint Cover plates... (See Table II)	16	.032	.015	.015	24
Reglets (c).....	10	-	.010	.010	-
Splash pans.....	16	.040	.018	.018	-

(a) Brass.

(b) May be lead weighing 4 pounds per square foot.

(c) May be polyvinyl chloride.

(d) 2.5 pound minimum lead sleeve with 4 inch flange. Where lead sleeve is impractical, refer to paragraph entitled "Single Pipe Vents" for optional material.

TABLE II. SHEET METAL JOINTS

Item Designation	TYPE OF JOINT: Copper, Terne-Coated Steel, Zinc-Coated Steel and Stainless Steel	Aluminum	Remarks
Joint cap for building expansion seam, cleated joint at roof	1.25 inch single lock, standing seam, cleated	1.25 inch single lock, standing	- - -
Flashings			
Base	One inch 3 inch lap for expansion joint	One inch flat locked, soldered; sealed; 3 inch lap for expansion joint	Aluminum producer's recommended hard setting sealant for locked aluminum joints. Fill

			each metal expansion joint with a joint sealing compound compound.
Cap-in reglet	3 inch lap	3 inch lap	Seal groove with joint sealing compound.
Reglets	Butt joint	- - -	Seal reglet groove with joint sealing compound.
Eave	One inch flat locked, cleated One inch loose locked, expansion joint cleated	One inch flat locked, locked, cleated one inch loose locked, sealed expansion joints, cleated	Same as base flashing.
Stepped	3 inch lap	3 inch lap	- - -
Valley.	6 inch lap cleated	6 inch lap cleated	- - -
Edge strip	Butt	Butt	- - -
Gravel stops:			
Extrusions	- - -	Butt with 1/2 inch space	Use sheet flashing beneath and a cover plate.
Sheet, smooth	Butt with 1/4 inch space	Butt with 1/4 inch space	Use sheet flashing backup plate.
Sheet corru-gated	Butt with 1/4 inch space	Butt with 1/4 inch space	Use sheet flashing beneath and a cover plate or a combination unit
Gutters	1.5 inch lap, riveted and soldered	One inch flat locked, riveted, and sealed	Aluminum producers recommended hard setting sealant for locked aluminum joints.

(a) Provide a 3 inch lap elastomeric flashing with manufacturer's recommended sealant.

(b) Seal polyvinyl chloride reglet with manufacturer's recommended sealant.

-- End of Section --

SECTION 07 92 00

JOINT SEALANTS
01/07

PART 1 GENERAL

1.1 REFERENCES

The publications listed below form a part of this specification to the extent referenced. The publications are referred to within the text by the basic designation only.

ASTM INTERNATIONAL (ASTM)

ASTM C1311	(2010) Standard Specification for Solvent Release Agents
ASTM C509	(2006; R 2011) Elastomeric Cellular Preformed Gasket and Sealing Material
ASTM C734	(2006; R 2012) Low-Temperature Flexibility of Latex Sealants After Artificial Weathering
ASTM C834	(2010) Latex Sealants
ASTM C919	(2012) Use of Sealants in Acoustical Applications
ASTM C920	(2011) Standard Specification for Elastomeric Joint Sealants
ASTM D1056	(2007) Standard Specification for Flexible Cellular Materials - Sponge or Expanded Rubber
ASTM D1667	(2005; R 2011) Flexible Cellular Materials - Poly (Vinyl Chloride) Foam (Closed-Cell)
ASTM D217	(2010) Cone Penetration of Lubricating Grease
ASTM D2452	(2003; R 2009) Standard Test Method for Extrudability of Oil- and Resin-Base Caulking Compounds
ASTM D2453	(2003; R 2009) Standard Test Method for Shrinkage and Tenacity of Oil- and Resin-Base Caulking Compounds
ASTM E84	(2013a) Standard Test Method for Surface Burning Characteristics of Building Materials

1.2 SUBMITTALS

Government approval is required for submittals with a "G" designation; submittals not having a "G" designation are for Contractor Quality Control approval. When used, a designation following the "G" designation identifies the office that will review the submittal for the Government. Submit the following in accordance with Section 01 33 00 SUBMITTAL PROCEDURES:

SD-03 Product Data

Sealants;

Primers;

Bond breakers;

Backstops;

Manufacturer's descriptive data including storage requirements, shelf life, curing time, instructions for mixing and application, and primer data (if required). Provide a copy of the Material Safety Data Sheet for each solvent, primer or sealant material.

SD-07 Certificates

Sealant;

Certificates of compliance stating that the materials conform to the specified requirements.

1.3 ENVIRONMENTAL CONDITIONS

Apply sealant when the ambient temperature is between 40 and 90 degrees F.

1.4 DELIVERY AND STORAGE

Deliver materials to the job site in unopened manufacturers' external shipping containers, with brand names, date of manufacture, [color,] and material designation clearly marked thereon. Label elastomeric sealant containers to identify type, class, grade, and use. Carefully handle and store materials to prevent inclusion of foreign materials or subjection to sustained temperatures exceeding 90 degrees F or less than 0 degrees F.

1.5 QUALITY ASSURANCE

1.5.1 Compatibility with Substrate

Verify that each of the sealants are compatible for use with joint substrates.

1.5.2 Joint Tolerance

Provide joint tolerances in accordance with manufacturer's printed instructions.

1.5.3 Mock-Up

Project personnel is responsible for installing sealants in mock-up, using materials and techniques approved for use on the project.

1.6 SPECIAL WARRANTY

Guarantee sealant joint against failure of sealant and against water penetration through each sealed joint for five years.

PART 2 PRODUCTS

2.1 SEALANTS

Provide sealant that has been tested and found suitable for the substrates to which it will be applied.

2.1.1 Interior Sealant

Provide ASTM C834 or ASTM C920, Type S or M, Grade NS, Class 12.5, Use NT. Location(s) and color(s) of sealant for the following:

	LOCATION	COLOR
a.	Small voids between walls or partitions and adjacent lockers, casework, shelving, door frames, built-in or surface-mounted equipment and fixtures, and similar items.	As selected
b.	Perimeter of frames at doors, windows, and access panels which adjoin exposed interior concrete and masonry surfaces.	As selected
c.	Joints of interior masonry walls and partitions which adjoin columns, pilasters, concrete walls, and exterior walls unless otherwise detailed.	As selected
d.	Joints between edge members for acoustical tile and adjoining vertical surfaces.	As selected
e.	Interior locations, not otherwise indicated or specified, where small voids exist between materials specified to be painted.	As selected
f.	Joints between bathtubs and ceramic tile; joints between shower receptors and ceramic tile; joints formed where nonplaner tile surfaces meet.	As selected

g.	Joints formed between tile floors and tile base cove; joints between tile and dissimilar materials; joints occurring where substrates change.	As selected
h.	Behind escutcheon plates at valve pipe penetrations and showerheads in showers.	As selected

2.1.2 Exterior Sealant

For joints in vertical surfaces, provide ASTM C920, Type S or M, Grade NS, Class 25, Use NT. For joints in horizontal surfaces, provide ASTM C920, Type S or M, Grade P, Class 25, Use T. Provide location(s) and color(s) of sealant as follows:

	LOCATION	COLOR
a.	Joints and recesses formed where frames and subsills of windows, doors, louvers, and vents adjoin masonry, concrete, or metal frames. Use sealant at both exterior and interior surfaces of exterior wall penetrations.	As selected
b.	Joints between new and existing exterior masonry walls.	As selected
c.	Masonry joints where shelf angles occur.	As selected
d.	Joints in wash surfaces of stonework.	As selected
e.	Expansion and control joints.	As selected
f.	Interior face of expansion joints in exterior concrete or masonry walls where metal expansion joint covers are not required.	As selected
g.	Voids where items pass through exterior walls.	As selected
h.	Metal reglets, where flashing is inserted into masonry joints, and where flashing is penetrated by coping dowels.	As selected
i.	Metal-to-metal joints where sealant is indicated or specified.	As selected
j.	Joints between ends of gravel stops, fascias, copings, and adjacent walls.	As selected

2.1.3 Floor Joint Sealant

ASTM C920, Type S or M, Grade P, Class 25, Use T. Provide location(s) and color(s) of sealant as follows:

LOCATION	COLOR
a. Seats of metal thresholds for exterior doors.	As selected
b. Control and expansion joints in floors, slabs, ceramic tile, and walkways.	As selected

2.1.4 Acoustical Sealant

Rubber or polymer-based acoustical sealant conforming to ASTM C919 must have a flame spread of 25 or less and a smoke developed rating of 50 or less when tested in accordance with ASTM E84. Acoustical sealant must have a consistency of 250 to 310 when tested in accordance with ASTM D217, and must remain flexible and adhesive after 500 hours of accelerated weathering as specified in ASTM C734, and must be non-staining.

2.1.5 Preformed Sealant

Provide preformed sealant of polybutylene or isoprene-butylene based pressure sensitive weather resistant tape or bead sealant capable of sealing out moisture, air and dust when installed as recommended by the manufacturer. At temperatures from minus 30 to plus 160 degrees F, the sealant must be non-bleeding and no loss of adhesion.

2.1.5.1 Tape

Tape sealant: not used

2.1.5.2 Bead

Bead sealant: Provide cross-section dimensions of required.

2.1.5.3 Foam Strip

Provide foam strip of polyurethane foam; with cross-section dimensions of required. Provide foam strip capable of sealing out moisture, air, and dust when installed and compressed as recommended by the manufacturer. Service temperature must beminus 40 to plus 275 degrees F. Furnish untreated strips with adhesive to hold them in place. Do not allow adhesive to stain or bleed into adjacent finishes. Saturate treated strips with butylene waterproofing or impregnated with asphalt.

2.2 PRIMERS

Provide a nonstaining, quick-drying type and consistency recommended by the sealant manufacturer for the particular application.

2.3 BOND BREAKERS

Provide the type and consistency recommended by the sealant manufacturer to prevent adhesion of the sealant to backing or to bottom of the joint.

2.4 BACKSTOPS

Provide glass fiber roving or neoprene, butyl, polyurethane, or polyethylene foams free from oil or other staining elements as recommended by sealant manufacturer. Provide 25 to 33 percent oversized backing for closed cell and 40 to 50 percent oversized backing for open cell material, unless otherwise indicated. Make backstop material compatible with sealant. Do not use oakum and other types of absorptive materials as backstops.

2.4.1 Rubber

Conform to ASTM D1056, Type 1, open cell or Type 2, closed cell, Class A cross section for required for cellular rubber sponge backing.

2.4.2 PVC

Conform to ASTM D1667, Grade VO 12, open-cell foam, round cross section as required for Polyvinyl chloride (PVC) backing.

2.4.3 Synthetic Rubber

Conform to ASTM C509, Option I, Type I preformed rods or tubes for Synthetic rubber backing.

2.4.4 Neoprene

Conform to ASTM D1056, closed cell expanded neoprene cord Type 2, Class C, Grade 2C2 or open cell neoprene sponge Type 1, Class C, Grade 1C3 for Neoprene backing.

2.4.5 Butyl Rubber Based

Provide Butyl Rubber Based Sealants of single component, solvent release, color as selected conforming to ASTM C1311.

2.4.6 Silicon Rubber Base

Provide Silicon Rubber Based Sealants of single component, solvent release, color as selected, conforming to ASTM C920, Non-sag.

2.5 CAULKING

Conform to ASTM D2452 and ASTM D2453. Type for Oil- and resin-based caulking.

2.6 CLEANING SOLVENTS

Provide type(s) recommended by the sealant manufacturer except for aluminum and bronze surfaces that will be in contact with sealant.

PART 3 EXECUTION

3.1 SURFACE PREPARATION

Clean surfaces from dirt frost, moisture, grease, oil, wax, lacquer, paint, or other foreign matter that would tend to destroy or impair adhesion. Remove oil and grease with solvent. Surfaces must be wiped dry with clean cloths. When resealing an existing joint, remove existing caulk or sealant prior to applying new sealant. For surface types not listed below, contact sealant manufacturer for specific recommendations.

3.1.1 Steel Surfaces

Remove loose mill scale by sandblasting or, if sandblasting is impractical or would damage finish work, scraping and wire brushing. Remove protective coatings by sandblasting or using a residue-free solvent.

3.1.2 Aluminum or Bronze Surfaces

Remove temporary protective coatings from surfaces that will be in contact with sealant. When masking tape is used as a protective coating, remove tape and any residual adhesive just prior to sealant application. For removing protective coatings and final cleaning, use nonstaining solvents recommended by the manufacturer of the item(s) containing aluminum or bronze surfaces.

3.1.3 Concrete and Masonry Surfaces

Where surfaces have been treated with curing compounds, oil, or other such materials, remove materials by sandblasting or wire brushing. Remove laitance, efflorescence and loose mortar from the joint cavity.

3.1.4 Wood Surfaces

Keep wood surfaces to be in contact with sealants free of splinters and sawdust or other loose particles.

3.2 SEALANT PREPARATION

Do not add liquids, solvents, or powders to the sealant. Mix multicomponent elastomeric sealants in accordance with manufacturer's instructions.

3.3 APPLICATION

3.3.1 Joint Width-To-Depth Ratios

a. Acceptable Ratios:

JOINT WIDTH	JOINT DEPTH	
	Minimum	Maximum
For metal, glass, or other nonporous surfaces:		

1/4 inch (minimum) over 1/4 inch	1/4 inch 1/2 of width	1/4 inch Equal to width

For wood, concrete, masonry, stone, :

1/4 inch (minimum) Over 1/4 inch to 1/2 inch	1/4 inch 1/4 inch	1/4 inch Equal to width
Over 1/2 inch to 2 inch Over 2 inch.	1/2 inch (As recommended by sealant manufacturer)	5/8 inch

b. Unacceptable Ratios: Where joints of acceptable width-to-depth ratios have not been provided, clean out joints to acceptable depths and grind or cut to acceptable widths without damage to the adjoining work. Grinding is not required on metal surfaces.

3.3.2 Masking Tape

Place masking tape on the finish surface on one or both sides of a joint cavity to protect adjacent finish surfaces from primer or sealant smears. Remove masking tape within 10 minutes after joint has been filled and tooled.

3.3.3 Backstops

Install backstops dry and free of tears or holes. Tightly pack the back or bottom of joint cavities with backstop material to provide a joint of the depth specified. Install backstops in the following locations:

a. Where indicated.

b. Where backstop is not indicated but joint cavities exceed the acceptable maximum depths specified in paragraph entitled, "Joint Width-to-Depth Ratios".

3.3.4 Primer

Immediately prior to application of the sealant, clean out loose particles from joints. Where recommended by sealant manufacturer, apply primer to joints in concrete masonry units, wood, and other porous surfaces in accordance with sealant manufacturer's instructions. Do not apply primer to exposed finish surfaces.

3.3.5 Bond Breaker

Provide bond breakers to the back or bottom of joint cavities, as recommended by the sealant manufacturer for each type of joint and sealant used, to prevent sealant from adhering to these surfaces. Carefully apply the bond breaker to avoid contamination of adjoining surfaces or breaking bond with surfaces other than those covered by the bond breaker.

3.3.6 Sealants

Provide a sealant compatible with the material(s) to which it is applied. Do not use a sealant that has exceeded shelf life or has jelled and can not be discharged in a continuous flow from the gun. Apply the sealant in accordance with the manufacturer's printed instructions with a gun having a nozzle that fits the joint width. Force sealant into joints to fill the joints solidly without air pockets. Tool sealant after application to ensure adhesion. Make sealant uniformly smooth and free of wrinkles. Upon completion of sealant application, roughen partially filled or unfilled joints, apply sealant, and tool smooth as specified. Apply sealer over the sealant when and as specified by the sealant manufacturer.

3.4 PROTECTION AND CLEANING

3.4.1 Protection

Protect areas adjacent to joints from sealant smears. Masking tape may be used for this purpose if removed 5 to 10 minutes after the joint is filled.

3.4.2 Final Cleaning

Upon completion of sealant application, remove remaining smears and stains and leave the work in a clean and neat condition.

a. Masonry and Other Porous Surfaces: Immediately scrape off fresh sealant that has been smeared on masonry and rub clean with a solvent as recommended by the sealant manufacturer. Allow excess sealant to cure for 24 hour then remove by wire brushing or sanding.

b. Metal and Other Non-Porous Surfaces: Remove excess sealant with a solvent-moistened cloth.

-- End of Section --

SECTION 09 90 00

PAINTS AND COATINGS
05/11

PART 1 GENERAL

1.1 REFERENCES

The publications listed below form a part of this specification to the extent referenced. The publications are referred to within the text by the basic designation only.

AMERICAN CONFERENCE OF GOVERNMENTAL INDUSTRIAL HYGIENISTS (ACGIH)

ACGIH 0100	(2001; Supplements 2002-2008) Documentation of the Threshold Limit Values and Biological Exposure Indices

ASME INTERNATIONAL (ASME)

ASME A13.1	(2007; R 2013) Scheme for the Identification of Piping Systems

ASTM INTERNATIONAL (ASTM)

ASTM C920	(2011) Standard Specification for Elastomeric Joint Sealants
ASTM D235	(2002; R 2012) Mineral Spirits (Petroleum Spirits) (Hydrocarbon Dry Cleaning Solvent)
ASTM D2824/D2824M	(2013) Aluminum-Pigmented Asphalt Roof Coatings, Non-Fibered, Asbestos Fibered, and Fibered without Asbestos
ASTM D4214	(2007) Standard Test Method for Evaluating the Degree of Chalking of Exterior Paint Films
ASTM D4263	(1983; R 2012) Indicating Moisture in Concrete by the Plastic Sheet Method
ASTM D4444	(2013) Use and Calibration of Hand-Held Moisture Meters
ASTM D523	(2014) Standard Test Method for Specular Gloss
ASTM D6386	(2010) Standard Practice for Preparation of Zinc (Hot-Dip Galvanized) Coated Iron and Steel Product and Hardware Surfaces for Painting
ASTM E2129	(2010) Standard Practice for Data Collection for Sustainability Assessment of Building Products

ASTM F1869	(2011) Measuring Moisture Vapor Emission Rate of Concrete Subfloor Using Anhydrous Calcium Chloride

MASTER PAINTERS INSTITUTE (MPI)

MPI 1	(Oct 2009) Aluminum Paint
MPI 10	(Oct 2009) Exterior Latex, Flat, MPI Gloss Level 1
MPI 101	(Oct 2009) Epoxy Anti-Corrosive Metal Primer
MPI 107	(Oct 2009) Rust Inhibitive Primer (Water-Based)
MPI 108	(Oct 2009) High Build Epoxy Coating, Low Gloss
MPI 11	(Oct 2009) Exterior Latex, Semi-Gloss, MPI Gloss Level 5
MPI 113	(Oct 2009) Exterior Pigmented Elastomeric Coating (Water Based)
MPI 116	(Oct 2009) Epoxy Block Filler
MPI 119	(Oct 2009) Exterior Latex, Gloss
MPI 13	(Oct 2009) Exterior Solvent-Based Semi-Transparent Stain
MPI 134	(Oct 2009) Galvanized Primer (Waterbased)
MPI 138	(Oct 2009) Interior High Performance Latex, MPI Gloss Level 2
MPI 139	(Oct 2009) Interior High Performance Latex, MPI Gloss Level 3
MPI 140	(Oct 2009) Interior High Performance Latex, MPI Gloss Level 4
MPI 141	(Oct 2009) Interior High Performance Latex MPI Gloss Level 5
MPI 144	(Oct 2009) Institutional Low Odor / VOC Interior Latex, MPI Gloss Level 2
MPI 145	(Oct 2009) Institutional Low Odor / VOC Interior Latex, MPI Gloss Level 3
MPI 146	(Oct 2009) Institutional Low Odor/VOC Interior Latex, MPI Gloss Level 4

MPI 147	(Oct 2009) Institutional Low Odor / VOC Interior Latex, Semi-Gloss, MPI Gloss Level 5
MPI 151	(Oct 2009) Interior W.B. Light Industrial Coating, MPI Gloss Level 3
MPI 153	(Oct 2009) Interior W.B. Light Industrial Coating, Semi-Gloss, MPI Gloss Level 5
MPI 154	(Oct 2009) Interior W.B. Light Industrial Coating, Gloss, MPI Gloss Level 6
MPI 16	(Oct 2009) Exterior Latex-Based Solid Hide Stain
MPI 161	(Oct 2009) Exterior W.B. Light Industrial Coating, MPI Gloss Level 3
MPI 163	(Oct 2009) Exterior W.B. Light Industrial Coating, Semi-Gloss, MPI Gloss Level 5
MPI 164	(Oct 2009) Exterior W.B. Light Industrial Coating, Gloss, MPI Gloss Level 6
MPI 19	(Oct 2009) Inorganic Zinc Rich Primer
MPI 2	(Oct 2009) Aluminum Heat Resistant Enamel (up to 427 C and 800 F
MPI 21	(Oct 2009) Heat Resistant Enamel, Gloss (up to 205 degrees C and 400 degrees F), MPI Gloss Level 6
MPI 22	(Oct 2009) Aluminum Paint, High Heat (up to 590 degrees C and 1100 degrees F.
MPI 23	(Oct 2009) Surface Tolerant Metal Primer
MPI 26	(Oct 2009) Cementitious Galvanized Metal Primer
MPI 27	(Oct 2009) Exterior / Interior Alkyd Floor Enamel, Gloss
MPI 31	(Oct 2009) Polyurethane, Moisture Cured, Clear Gloss
MPI 39	(Oct 2009) Interior Latex-Based Wood Primer
MPI 4	(Oct 2009) Interior/Exterior Latex Block Filler
MPI 42	(Oct 2009) Latex Stucco and Masonry Textured Coating
MPI 44	(Oct 2009) Interior Latex, MPI Gloss Level 2

MPI 45	(Oct 2009) Interior Alkyd Primer Sealer
MPI 46	(Oct 2009) Interior Enamel Undercoat
MPI 47	(Oct 2009) Interior Alkyd, Semi-Gloss, MPI Gloss Level 5
MPI 48	(Oct 2009) Interior Alkyd, Gloss, MPI Gloss Level 6
MPI 49	(Oct 2009) Interior Alkyd, Flat, MPI Gloss Level 1
MPI 5	(Oct 2009) Exterior Alkyd Wood Primer
MPI 50	(Oct 2009) Interior Latex Primer Sealer
MPI 51	(Oct 2009) Interior Alkyd, Eggshell, MPI Gloss Level 2
MPI 52	(Oct 2009) Interior Latex, MPI Gloss Level 3
MPI 54	(Oct 2009) Interior Latex, Semi-Gloss, MPI Gloss Level 5
MPI 56	(Oct 2009) Interior Oil Modified Urethane Clear Gloss
MPI 57	(Oct 2009) Interior Oil Modified Urethane Clear Satin
MPI 59	(Oct 2009) Interior/Exterior Floor Enamel, Low Gloss
MPI 6	(Oct 2009) Exterior Latex Wood Primer
MPI 60	(Oct 2009) Interior/Exterior Latex Floor Paint, Low Gloss
MPI 68	(Oct 2009) Interior/Exterior Latex Floor Enamel, Gloss
MPI 7	(Oct 2009) Exterior Oil Wood Primer
MPI 71	(Oct 2009) Polyurethane, Moisture Cured, Clear, Flat
MPI 72	(Oct 2009) Polyurethane, Two Component, Pigmented, Gloss
MPI 77	(Oct 2009) Epoxy Gloss
MPI 79	(Oct 2009) Alkyd Anti-Corrosive Metal Primer
MPI 8	(Oct 2009) Exterior Alkyd, Flat, MPI Gloss Level I

MPI 9	(Oct 2009) Exterior Alkyd, Gloss, MPI Gloss Level 6
MPI 90	(Oct 2009) Interior Wood Stain, Semi-Transparent
MPI 94	(Oct 2009) Exterior Alkyd, Semi-Gloss, MPI Gloss Level 5
MPI 95	(Oct 2009) Quick Drying Primer for Aluminum

SCIENTIFIC CERTIFICATION SYSTEMS (SCS)

SCS	Scientific Certification Systems (SCS)Indoor Advantage
SCS SP-01	(2000) Environmentally Preferable Product Specification for Architectural and Anti-Corrosive Paints

THE SOCIETY FOR PROTECTIVE COATINGS (SSPC)

SSPC Guide 6	(2004) Guide for Containing Surface Preparation Debris Generated During Paint Removal Operations
SSPC Guide 7	(2004; E 2004) Guide to the Disposal of Lead-Contaminated Surface Preparation Debris
SSPC PA 1	(2000; E 2004) Shop, Field, and Maintenance Painting of Steel
SSPC PA Guide 3	(1982; E 1995) A Guide to Safety in Paint Application
SSPC Paint 18	(1982; E 2004) Chlorinated Rubber Intermediate Coat Paint
SSPC SP 1	(1982; E 2004) Solvent Cleaning
SSPC SP 2	(1982; E 2000; E 2004) Hand Tool Cleaning
SSPC SP 3	(1982; E 2004) Power Tool Cleaning
SSPC VIS 3	(2004) Guide and Reference Photographs for Steel Surfaces Prepared by Hand and Power Tool Cleaning

U.S. ARMY CORPS OF ENGINEERS (USACE)

EM 385-1-1	(2008; Errata 1-2010; Changes 1-3 2010; Changes 4-6 2011; Change 7 2012) Safety and Health Requirements Manual

U.S. DEPARTMENT OF DEFENSE (DOD)

MIL-PRF-680	(2010; Rev C) Degreasing Solvent

MIL-STD-101	(1970; Rev B) Color Code for Pipelines & for Compressed Gas Cylinders

U.S. ENVIRONMENTAL PROTECTION AGENCY (EPA)

EPA Method 24	(2000) Determination of Volatile Matter Content, Water Content, Density, Volume Solids, and Weight Solids of Surface Coatings

U.S. FEDERAL AVIATION ADMINISTRATION (FAA)

FAA AC 70/7460-1	(2007; Rev K) Obstruction Marking and Lighting

U.S. GENERAL SERVICES ADMINISTRATION (GSA)

FED-STD-313	(Rev D; Notice 1) Material Safety Data, Transportation Data and Disposal Data for Hazardous Materials Furnished to Government Activities
FED-STD-595	(Rev C; Notice 1) Colors Used in Government Procurement

U.S. GREEN BUILDING COUNCIL (USGBC)

LEED NC	(2009) Leadership in Energy and Environmental Design(tm) New Construction Rating System

U.S. NATIONAL ARCHIVES AND RECORDS ADMINISTRATION (NARA)

29 CFR 1910.1000	Air Contaminants
29 CFR 1910.1001	Asbestos
29 CFR 1910.1025	Lead
29 CFR 1926.62	Lead

UL ENVIRONMENT (ULE)

ULE Greenguard	UL Greenguard Certification Program

1.2 SUBMITTALS

Government approval is required for submittals with a "G" designation; submittals not having a "G" designation are for Contractor Quality Control approval. When used, a designation following the "G" designation identifies the office that will review the submittal for the Government. The following shall be submitted in accordance with Section 01 33 00 SUBMITTAL PROCEDURES:

The current MPI, "Approved Product List" which lists paint by brand, label, product name and product code as of the date of contract award, will be used to determine compliance with the submittal requirements of this specification. The Contractor may choose to use a subsequent MPI "Approved Product List", however, only one list may be used for the entire contract

and each coating system is to be from a single manufacturer. All coats on a particular substrate must be from a single manufacturer. No variation from the MPI Approved Products List is acceptable.

Samples of specified materials may be taken and tested for compliance with specification requirements.

In keeping with the intent of Executive Order 13101, "Greening the Government through Waste Prevention, Recycling, and Federal Acquisition", products certified by SCS as meeting SCS SP-01 shall be given preferential consideration over registered products. Products that are registered shall be given preferential consideration over products not carrying any EPP designation.

SD-02 Shop Drawings

Piping identification

Submit color stencil codes

SD-03 Product Data

Certification

Local/Regional Materials; LEED;

Submit documentation indicating distance between manufacturing facility and the project site. Indicate distance of raw material origin from the project site. Indicate relative dollar value of local/regional materials to total dollar value of products included in project.

Environmental Data

Materials; LEED
Submit documentation indicating percentage of post-industrial and post-consumer recycled content per unit of product. Indicate relative dollar value of recycled content products to total dollar value of products included in project.

Coating; G

Manufacturer's Technical Data Sheets; LEED;

Indicate VOC content.

Sealant

SD-04 Samples

Color; G

Submit manufacturer's samples of paint colors. Cross reference color samples to color scheme as indicated.

Textured Wall Coating System; G

Sample Textured Wall Coating System Mock-Up; G

SD-07 Certificates

Applicator's qualifications

Qualification Testing laboratory for coatings; G

SD-08 Manufacturer's Instructions

Application instructions

Mixing

Detailed mixing instructions, minimum and maximum application temperature and humidity, potlife, and curing and drying times between coats.

Manufacturer's Material Safety Data Sheets

Submit manufacturer's Material Safety Data Sheets for coatings, solvents, and other potentially hazardous materials, as defined in FED-STD-313.

SD-10 Operation and Maintenance Data

Coatings; G

Preprinted cleaning and maintenance instructions for all coating systems shall be provided.

SD-11 Closeout Submittals

Local/Regional Materials; LEED

LEED documentation relative to local/regional materials credit in accordance with LEED Reference Guide. Include in LEED Documentation Notebook.

Materials; LEED

LEED documentation relative to recycled content credit in accordance with LEED Reference Guide. Include in LEED Documentation Notebook.

LEED documentation relative to low emitting materials credit in accordance with LEED Reference Guide. Include in LEED Documentation Notebook.

1.3 APPLICATOR'S QUALIFICATIONS

1.3.1 Contractor Qualification

Submit the name, address, telephone number, FAX number, and e-mail address of the contractor that will be performing all surface preparation and coating application. Submit evidence that key personnel have successfully performed surface preparation and application of coatings on a minimum of

three similar projects within the past three years. List information by individual and include the following:

a. Name of individual and proposed position for this work.

b. Information about each previous assignment including:

Position or responsibility

Employer (if other than the Contractor)

Name of facility owner

Mailing address, telephone number, and telex number (if non-US) of facility owner

Name of individual in facility owner's organization who can be contacted as a reference

Location, size and description of structure

Dates work was carried out

Description of work carried out on structure

1.4 QUALITY ASSURANCE

1.4.1 Field Samples and Tests

The Contracting Officer may choose up to two coatings that have been delivered to the site to be tested at no cost to the Government. Take samples of each chosen product as specified in the paragraph "Sampling Procedures." Test each chosen product as specified in the paragraph "Testing Procedure." Products which do not conform, shall be removed from the job site and replaced with new products that conform to the referenced specification. Testing of replacement products that failed initial testing shall be at no cost to the Government.

1.4.1.1 Sampling Procedure

The Contracting Officer will select paint at random from the products that have been delivered to the job site for sample testing. The Contractor shall provide one quart samples of the selected paint materials. The samples shall be taken in the presence of the Contracting Officer, and labeled, identifying each sample. Provide labels in accordance with the paragraph "Packaging, Labeling, and Storage" of this specification.

1.4.1.2 Testing Procedure

Provide Batch Quality Conformance Testing for specified products, as defined by and performed by MPI. As an alternative to Batch Quality Conformance Testing, the Contractor may provide Qualification Testing for specified products above to the appropriate MPI product specification, using the third-party laboratory approved under the paragraph "Qualification Testing" laboratory for coatings. The qualification testing lab report shall include the backup data and summary of the test results. The summary shall list all of the reference specification requirements and the result of each test.

The summary shall clearly indicate whether the tested paint meets each test requirement. Note that Qualification Testing may take 4 to 6 weeks to perform, due to the extent of testing required.

Submit name, address, telephone number, FAX number, and e-mail address of the independent third party laboratory selected to perform testing of coating samples for compliance with specification requirements. Submit documentation that laboratory is regularly engaged in testing of paint samples for conformance with specifications, and that employees performing testing are qualified. If the Contractor chooses MPI to perform the Batch Quality Conformance testing, the above submittal information is not required, only a letter is required from the Contractor stating that MPI will perform the testing.

1.4.2 Textured Wall Coating System

Three complete samples of each indicated type, pattern, and color of textured wall coating system applied to a panel of the same material as that on which the coating system will be applied in the work. Samples of wall coating systems shall be minimum 5 by 7 inches and of sufficient size to show pattern repeat and texture.

1.4.3 Sample Textured Wall Coating System Mock-Up

After coating samples are approved, and prior to starting installation, a minimum 8 foot by 8 foot mock-up shall be provided for each substrate and for each color and type of textured wall coating, using the actual substrate materials. Once approved the mock-up samples shall be used as a standard of workmanship for installation within the facility. At least 48 hours prior to mock-up installation, the Contractor shall submit written notification to the Contracting Officer's Representative.

1.4.4 Sustainable Design Certification

Product shall be third party certified in accordance with ULE Greenguard, SCS Scientific Certification Systems Indoor Advantage or equal. Certification shall be performed annually and shall be current.

1.5 REGULATORY REQUIREMENTS

1.5.1 Environmental Protection

In addition to requirements specified elsewhere for environmental protection, provide coating materials that conform to the restrictions of the local Air Pollution Control District and regional jurisdiction. Notify Contracting Officer of any paint specified herein which fails to conform.

1.5.2 Lead Content

Do not use coatings having a lead content over 0.06 percent by weight of nonvolatile content.

1.5.3 Chromate Content

Do not use coatings containing zinc-chromate or strontium-chromate.

1.5.4 Asbestos Content

Materials shall not contain asbestos.

1.5.5 Mercury Content

Materials shall not contain mercury or mercury compounds.

1.5.6 Silica

Abrasive blast media shall not contain free crystalline silica.

1.5.7 Human Carcinogens

Materials shall not contain ACGIH 0100Doc and ACGIH 0100Doc confirmed human carcinogens (A1) or suspected human carcinogens (A2).

1.6 PACKAGING, LABELING, AND STORAGE

Paints shall be in sealed containers that legibly show the contract specification number, designation name, formula or specification number, batch number, color, quantity, date of manufacture, manufacturer's formulation number, manufacturer's directions including any warnings and special precautions, and name and address of manufacturer. Pigmented paints shall be furnished in containers not larger than 5 gallons. Paints and thinners shall be stored in accordance with the manufacturer's written directions, and as a minimum, stored off the ground, under cover, with sufficient ventilation to prevent the buildup of flammable vapors, and at temperatures between 40 to 95 degrees F. Do not store paint, polyurethane, varnish, or wood stain products with materials that have a high capacity to adsorb VOC emissions. Do not store paint, polyurethane, varnish, or wood stain products in occupied spaces.

1.7 SAFETY AND HEALTH

Apply coating materials using safety methods and equipment in accordance with the following:

Work shall comply with applicable Federal, State, and local laws and regulations, and with the ACCIDENT PREVENTION PLAN, including the Activity Hazard Analysis as specified in Section 01 35 26 GOVERNMENT SAFETY REQUIREMENTS and in Appendix A of EM 385-1-1. The Activity Hazard Analysis shall include analyses of the potential impact of painting operations on painting personnel and on others involved in and adjacent to the work zone.

1.7.1 Safety Methods Used During Coating Application

Comply with the requirements of SSPC PA Guide 3.

1.7.2 Toxic Materials

To protect personnel from overexposure to toxic materials, conform to the most stringent guidance of:

a. The applicable manufacturer's Material Safety Data Sheets (MSDS) or local regulation.

b. 29 CFR 1910.1000.
c. ACGIH 0100Doc, threshold limit values.

The appropriate OSHA standards in 29 CFR 1910.1001 for surface preparation of painted surfaces containing asbestos.

1.8 ENVIRONMENTAL CONDITIONS

Comply, at minimum, with manufacturer recommendations for space ventilation during and after installation. Isolate area of application from rest of building when applying high-emission paints or coatings.

1.8.1 Coatings

Do not apply coating when air or substrate conditions are:

a. Less than 5 degrees F above dew point;

b. Below 50 degrees F or over 95 degrees F, unless specifically pre-approved by the Contracting Officer and the product manufacturer. Under no circumstances shall application conditions exceed manufacturer recommendations.

1.8.2 Post-Application

Vacate space for as long as possible after application. Wait a minimum of 48 hours before occupying freshly painted rooms. Maintain one of the following ventilation conditions during the curing period, or for 72 hours after application:

a. Supply 100 percent outside air 24 hours a day.

b. Supply airflow at a rate of 6 air changes per hour, when outside temperatures are between 55 degrees F and 85 degrees F and humidity is between 30 percent and 60 percent.

c. Supply airflow at a rate of 1.5 air changes per hour, when outside air conditions are not within the range stipulated above.

1.9 SUSTAINABLE DESIGN REQUIREMENTS

1.9.1 Local/Regional Materials

Use materials or products extracted, harvested, or recovered, as well as manufactured, within a 500 mile radius from the project site, if available from a minimum of three sources

1.9.2 Environmental Data

Submit Table 1 of ASTM E 2129.

1.10 SCHEDULING

Allow paint, polyurethane, varnish, and wood stain installations to cure prior to the installation of materials that adsorb VOCs.

1.11 COLOR SELECTION

A. Colors of finish coats shall be as indicated or specified. Where not indicated or specified, colors shall be selected by the Contracting Officer. Manufacturers' names and color identification are used for the purpose of color identification only. Named products are acceptable for use only if they conform to specified requirements. Products of other manufacturers are acceptable if the colors approximate colors indicated and the product conforms to specified requirements.

Tint each coat progressively darker to enable confirmation of the number of coats.

* This includes connections serving domestic functions.

** This includes non-potable salt water or, at some locations, fresh water connections provided for fire protection (may also include flushing and cooling requirements). Note: This does not include waterfront fire hydrants.

B. SPECIAL Color Coding For Shore-To-Ship Utility Connections: Paint hose connection fittings and shut-off valves the designated color. In addition to color coding provide 2 inch high stenciled letters using black stencil paint, clearly designating service for each connection.

Color Coding for Shore-to-Ship
Utility Connections

Service	Color	FED-STD-595 No.
Potable Water*	Blue	15044
Water Provided for Fire Protection**	Red	11105
Chilled Water	Striped Blue/White	15044/17886
Oily Waste Water	Striped Yellow/Black	13538/17038
Sewer	Gold	17043
Steam	White	17886
High Pressure Air	Gray	16081
Low Pressure Air	Tan	10324
Fuel	Yellow	13655

* This includes connections serving domestic functions.

** This includes non-potable salt water or, at some locations, fresh water connections provided for fire protection (may also include flushing and cooling requirements). Note: This does not include waterfront fire hydrants.

1.12 LOCATION AND SURFACE TYPE TO BE PAINTED

1.12.1 Painting Included

Where a space or surface is indicated to be painted, include the following unless indicated otherwise.

a. Surfaces behind portable objects and surface mounted articles readily detachable by removal of fasteners, such as screws and bolts.

b. New factory finished surfaces that require identification or color coding and factory finished surfaces that are damaged during performance of the work.

c. Existing coated surfaces and surfaces that are damaged during performance of the work.

1.12.1.1 Exterior Painting

Paint all surfaces. Includes, but not exclusively: new surfaces, existing coated surfaces, existing repaired surfaces and existing uncoated surfaces, of the buildings and appurtenances. Also included are existing coated surfaces made bare by cleaning operations.

1.12.1.2 Interior Painting Limited to affected areas by exterior painting and repairs

Paint interior surfaces co-incidental to exterior repaired surfaces including: new surfaces, existing uncoated surfaces, and existing coated surfaces of the buildings and appurtenances as indicated and existing coated surfaces made bare by cleaning operations. Where a space or surface is indicated to be painted, include the following items, unless indicated otherwise.

a. Exposed columns, girders, beams, joists, and metal deck; and

b. Other contiguous surfaces.

1.12.2 Painting Excluded

Do not paint the following unless indicated otherwise.

a. Surfaces concealed and made inaccessible by panelboards, fixed ductwork, machinery, and equipment fixed in place.

b. Surfaces in concealed spaces. Concealed spaces are defined as enclosed spaces above suspended ceilings, furred spaces, attic spaces, crawl spaces, elevator shafts and chases.

c. Steel to be embedded in concrete.

d. Copper, stainless steel, aluminum, brass, and lead except existing coated surfaces.

e. Hardware, fittings, and other factory finished items.

f. Surfaces in the following areas shall not be painted:

1.12.3 Mechanical and Electrical Painting

Includes field coating of exterior new and existing surfaces.

a. Where a space or surface is indicated to be painted, include the following items unless indicated otherwise.

(1) Exposed piping, conduit, and ductwork;

(2) Supports, hangers, air grilles, and registers;

(3) Miscellaneous metalwork and insulation coverings.

b. Do not paint the following, unless indicated otherwise:

(1) New zinc-coated, aluminum, and copper surfaces under insulation]

(2) New aluminum jacket on piping

(3) New interior ferrous piping under insulation.

1.12.3.1 Exterior Fire Extinguishing Sprinkler Systems

Clean, pretreat, prime, and paint new fire extinguishing sprinkler systems including valves, piping, conduit, hangers, supports, miscellaneous metalwork, and accessories. Apply coatings to clean, dry surfaces, using clean brushes. Clean the surfaces to remove dust, dirt, rust, and loose mill scale. Immediately after cleaning, provide the metal surfaces with one coat primer per schedules. Shield sprinkler heads with protective covering while painting is in progress. Upon completion of painting, remove protective covering from sprinkler heads. Remove sprinkler heads which have been painted and replace with new sprinkler heads. Provide primed surfaces with the following:

a. Piping in Unfinished Areas: Provide primed surfaces with one coat of red alkyd gloss enamel applied to a minimum dry film thickness of 1.0 mil in attic spaces, spaces above suspended ceilings, crawl spaces, pipe chases, mechanical equipment room, and spaces where walls or ceiling are not painted or not constructed of a prefinished material. In lieu of red enamel finish coat, provide piping with 2 inch wide red enamel bands or self-adhering red plastic bands spaced at maximum of 20 foot intervals.

b. Piping in Finished Areas: Provide primed surfaces with two coats of paint to match adjacent surfaces, except provide valves and operating accessories with one coat of red alkyd gloss enamel applied to a minimum dry film thickness of 1.0 mil. Provide piping with 2 inch wide red enamel bands or self-adhering red plastic bands spaced at maximum of 20 foot intervals throughout the piping systems.

1.12.5 MISCELLANEOUS PAINTING

Lettering Building Numbers

Obstructions To Aviation

The following obstructions to aviation shall be painted in the pattern and color prescribed by FAA AC 70/7460-1

1.12.6 Definitions and Abbreviations

1.12.6.1 Qualification Testing

Qualification testing is the performance of all test requirements listed in the product specification. This testing is accomplished by MPI to qualify each product for the MPI Approved Product List, and may also be accomplished by Contractor's third party testing lab if an alternative to Batch Quality Conformance Testing by MPI is desired.

1.12.6.2 Batch Quality Conformance Testing

Batch quality conformance testing determines that the product provided is the same as the product qualified to the appropriate product specification. This testing shall only be accomplished by MPI testing lab.

1.12.6.3 Coating

A film or thin layer applied to a base material called a substrate. A coating may be a metal, alloy, paint, or solid/liquid suspensions on various substrates (metals, plastics, wood, paper, leather, cloth, etc.). They may be applied by electrolysis, vapor deposition, vacuum, or mechanical means such as brushing, spraying, calendaring, and roller coating. A coating may be applied for aesthetic or protective purposes or both. The term "coating" as used herein includes emulsions, enamels, stains, varnishes, sealers, epoxies, and other coatings, whether used as primer, intermediate, or finish coat. The terms paint and coating are used interchangeably.

1.12.6.4 DFT or dft

Dry film thickness, the film thickness of the fully cured, dry paint or coating.

1.12.6.5 DSD

Degree of Surface Degradation, the MPI system of defining degree of surface degradation. Five (5) levels are generically defined under the Assessment sections in the MPI Maintenance Repainting Manual.

1.12.6.6 EPP

Environmentally Preferred Products, a standard for determining environmental preferability in support of Executive Order 13101.

1.12.6.7 EXT

MPI short term designation for an exterior coating system.

1.12.6.8 INT

MPI short term designation for an interior coating system.

1.12.6.9 micron / microns

The metric measurement for 0.001 mm or one/one-thousandth of a millimeter.

1.12.6.10 mil / mils

The English measurement for 0.001 in or one/one-thousandth of an inch, equal to 25.4 microns or 0.0254 mm.

1.12.6.11 mm

The metric measurement for millimeter, 0.001 meter or one/one-thousandth of a meter.

1.12.6.12 MPI Gloss Levels

MPI system of defining gloss. Seven (7) gloss levels (G1 to G7) are generically defined under the Evaluation sections of the MPI Manuals. Traditionally, Flat refers to G1/G2, Eggshell refers to G3, Semigloss refers to G5, and Gloss refers to G6.

Gloss levels are defined by MPI as follows:

Gloss Level	Description	Units at 60 degrees	Units at 85 degrees
G1	Matte or Flat	0 to 5	10 max
G2	Velvet	0 to 10	10 to 35
G3	Eggshell	10 to 25	10 to 35
G4	Satin	20 to 35	35 min
G5	Semi-Gloss	35 to 70	
G6	Gloss	70 to 85	
G7	High Gloss		

Gloss is tested in accordance with ASTM D 523. Historically, the Government has used Flat (G1 / G2), Eggshell (G3), Semi-Gloss (G5), and Gloss (G6).

1.12.6.13 MPI System Number

The MPI coating system number in each Division found in either the MPI Architectural Painting Specification Manual or the Maintenance Repainting Manual and defined as an exterior (EXT/REX) or interior system (INT/RIN). The Division number follows the CSI Master Format.

1.12.6.14 Paint

See Coating definition.

1.12.6.15 REX

MPI short term designation for an exterior coating system used in repainting projects or over existing coating systems.

1.12.6.16 RIN

MPI short term designation for an interior coating system used in repainting projects or over existing coating systems.

PART 2 PRODUCTS

2.1 MATERIALS

Conform to the coating specifications and standards referenced in PART 3. Submit manufacturer's technical data sheets for specified coatings and solvents.

PART 3 EXECUTION

3.1 PROTECTION OF AREAS AND SPACES NOT TO BE PAINTED

Prior to surface preparation and coating applications, remove, mask, or otherwise protect, hardware, hardware accessories, machined surfaces, radiator covers, plates, lighting fixtures, public and private property, and other such items not to be coated that are in contact with surfaces to be coated. Following completion of painting, workmen skilled in the trades involved shall reinstall removed items. Restore surfaces contaminated by coating materials, to original condition and repair damaged items.

3.2 REPUTTYING AND REGLAZING

Remove cracked, loose, and defective putty or glazing compound on glazed sash and provide new putty or glazing compound. Where defective putty or glazing compound constitutes 30 percent or more of the putty at any one light, remove the glass and putty or glazing compound and reset the glass. Remove putty or glazing compound without damaging sash or glass. Clean rabbets to bare wood or metal and prime prior to reglazing. Putty for wood sash shall be a linseed oil putty. Glazing compound for metal sash shall conform to ASTM C 669. Patch surfaces to provide smooth transition between existing and new surfaces. Finish putty or glazing compound to a neat and true bead. Allow glazing compound time to cure, in accordance with manufacturer's recommendation, prior to coating application. Allow putty to set one week prior to coating application.

3.3 RESEALING OF EXISTING EXTERIOR JOINTS

Such work is covered in SECTION 07920, “Joint Sealants”.

3.3.1 Surface Condition

Surfaces shall be clean, dry to the touch, and free from frost and moisture; remove grease, oil, wax, lacquer, paint, defective backstop, or other foreign matter that would prevent or impair adhesion. Where adequate grooves have not been provided, clean out to a depth of 1/2 inch and grind to a minimum width of 1/4 inch without damage to adjoining work. Grinding shall not be required on metal surfaces.

3.3.2 Backstops

In joints more than 1/2 inch deep, install glass fiber roving or neoprene, butyl, polyurethane, or polyethylene foams free of oil or other staining elements as recommended by sealant manufacturer. Backstop material shall be compatible with sealant. Do not use oakum and other types of absorptive materials as backstops.

3.3.3 Primer and Bond Breaker

Install the type recommended by the sealant manufacturer.

3.3.4 Ambient Temperature

Between 38 degrees F and 95 degrees F when applying sealant.

3.3.5 Exterior Sealant

For joints in vertical surfaces, provide ASTM C 920, Type S or M, Grade NS, Class 25, Use NT. For joints in horizontal surfaces, provide ASTM C 920, Type S or M, Grade P, Class 25, Use T. Color(s) shall be selected by the Contracting Officer. Apply the sealant in accordance with the manufacturer's printed instructions. Force sealant into joints with sufficient pressure to fill the joints solidly. Sealant shall be uniformly smooth and free of wrinkles.

3.3.6 Cleaning

Immediately remove fresh sealant from adjacent areas using a solvent recommended by the sealant manufacturer. Upon completion of sealant application, remove remaining smears and stains and leave the work in a clean condition. Allow sealant time to cure, in accordance with manufacturer's recommendations, prior to coating.

3.4 SURFACE PREPARATION

Remove dirt, splinters, loose particles, grease, oil, disintegrated coatings, and other foreign matter and substances deleterious to coating performance as specified for each substrate before application of paint or surface treatments. Oil and grease shall be removed prior to mechanical cleaning. Cleaning shall be programmed so that dust and other contaminants will not fall on wet, newly painted surfaces. Exposed ferrous metals such as nail heads on or in contact with surfaces to be painted with water-thinned paints, shall be spot-primed with a suitable corrosion-inhibitive primer capable of preventing flash rusting and compatible with the coating specified for the adjacent areas.

3.4.1 Additional Requirements for Preparation of Surfaces With Existing Coatings

Before application of coatings, perform the following on surfaces covered by soundly-adhered coatings, defined as those which cannot be removed with a putty knife:

a. Test existing finishes for lead before sanding, scraping, or removing. If lead is present, refer to paragraph Toxic Materials.

b. Wipe previously painted surfaces to receive solvent-based coatings, except stucco and similarly rough surfaces clean with a clean, dry cloth saturated with mineral spirits, ASTM D 235. Allow surface to dry. Wiping shall immediately precede the application of the first coat of any coating, unless specified otherwise.

c. Sand existing glossy surfaces to be painted to reduce gloss. Brush, and wipe clean with a damp cloth to remove dust.

d. The requirements specified are minimum. Comply also with the application instructions of the paint manufacturer.

e. Previously painted surfaces specified to be repainted or damaged during construction shall be thoroughly cleaned of all grease, dirt, dust or other foreign matter.

f. Blistering, cracking, flaking and peeling or other deteriorated coatings shall be removed.

g. Chalk shall be removed so that when tested in accordance with ASTM D 4214, the chalk resistance rating is no less than 8.

h. Slick surfaces shall be roughened. Damaged areas such as, but not limited to, nail holes, cracks, chips, and spalls shall be repaired with suitable material to match adjacent undamaged areas.

i. Edges of chipped paint shall be feather edged and sanded smooth.

j. Rusty metal surfaces shall be cleaned as per SSPC requirements. Solvent, mechanical, or chemical cleaning methods shall be used to provide surfaces suitable for painting.

k. New, proposed coatings shall be compatible with existing coatings.

3.4.2 Existing Coated Surfaces with Minor Defects

Sand, spackle, and treat minor defects to render them smooth. Minor defects are defined as scratches, nicks, cracks, gouges, spalls, alligatoring, chalking, and irregularities due to partial peeling of previous coatings. Remove chalking by sanding so that when tested in accordance with ASTM D 4214, the chalk rating is not less than 8.

3.4.3 Removal of Existing Coatings

Remove existing coatings from the following surfaces:

a. Surfaces containing large areas of minor defects;

b. Surfaces containing more than 20 percent peeling area; and

c. Surfaces designated by the Contracting Officer, such as surfaces where rust shows through existing coatings.

3.4.4 Substrate Repair

a. Repair substrate surface damaged during coating removal;

b. Sand edges of adjacent soundly-adhered existing coatings so they are tapered as smooth as practical to areas involved with coating removal; and

c. Clean and prime the substrate as specified.

3.5 PREPARATION OF METAL SURFACES

3.5.1 Existing and New Ferrous Surfaces

a. Ferrous Surfaces including Shop-coated Surfaces and Small Areas That Contain Rust, Mill Scale and Other Foreign Substances: Solvent clean or detergent wash in accordance with SSPC SP 1 to remove oil and grease. Where shop coat is missing or damaged, clean according to SSPC SP 2, SSPC SP 3. Use inhibitor as recommended by coating manufacturer to prevent premature rusting. Shop-coated ferrous surfaces shall be protected from corrosion by treating and touching up corroded areas immediately upon detection.

3.5.2 Final Ferrous Surface Condition:

For tool cleaned surfaces, the requirements are stated in SSPC SP 2 and SSPC SP 3. As a visual reference, cleaned surfaces shall be similar to photographs in SSPC VIS 3.

3.5.4 Non-Ferrous Metallic Surfaces

Aluminum and aluminum-alloy, lead, copper, and other nonferrous metal surfaces.

Surface Cleaning: Solvent clean in accordance with SSPC SP 1 and wash with mild non-alkaline detergent to remove dirt and water soluble contaminants.

3.5.5 Terne-Coated Metal Surfaces

Solvent clean surfaces with mineral spirits, ASTM D 235. Wipe dry with clean, dry cloths.

3.5.6 Existing Surfaces with a Bituminous or Mastic-Type Coating

Remove chalk, mildew, and other loose material by washing with a solution of 1/2 cup trisodium phosphate, 1/4 cup household detergent, one quart 5 percent sodium hypochlorite solution and 3 quarts of warm water.

3.6 PREPARATION OF CONCRETE AND CEMENTITIOUS SURFACE

3.6.1 Concrete and Masonry

a. Curing: Concrete, stucco and masonry surfaces shall be allowed to cure at least 30 days before painting, except concrete slab on grade, which shall be allowed to cure 90 days before painting.

b. Surface Cleaning: Remove the following deleterious substances.

(1) Dirt, Chalking, Grease, and Oil: Wash new and existing uncoated surfaces with a solution composed of 1/2 cup trisodium phosphate, 1/4 cuphousehold detergent, and 4 quarts of warm water. Then rinse thoroughly with fresh water. Wash existing coated surfaces with a suitable detergent and rinse thoroughly. For large areas, water blasting may be used.

(2) Fungus and Mold: Wash new , existing coated, and existing uncoated surfaces with a solution composed of 1/2 cup trisodium phosphate, 1/4 cup household detergent, 1 quart 5 percent sodium hypochlorite solution and 3 quarts of warm water. Rinse thoroughly with fresh water.

(3) Paint and Loose Particles: Remove by wire brushing.

(4) Efflorescence: Remove by scraping or wire brushing followed by washing with a 5 to 10 percent by weight aqueous solution of hydrochloric (muriatic) acid. Do not allow acid to remain on the surface for more than five minutes before rinsing with fresh water. Do not acid clean more than 4 square feet of surface, per workman, at one time.

(5) Removal of Existing Coatings: For surfaces to receive textured coating MPI 42, remove existing coatings including soundly adhered coatings if recommended by textured coating manufacturer.

c. Cosmetic Repair of Minor Defects: Repair or fill mortar joints and minor defects, including but not limited to spalls, in accordance with manufacturer's recommendations and prior to coating application.

d. Allowable Moisture Content: Latex coatings may be applied to damp surfaces, but not to surfaces with droplets of water. Do not apply epoxies to damp vertical surfaces as determined by ASTM D 4263 or horizontal surfaces that exceed 3 lbs of moisture per 1000 square feet in 24 hours as determined by ASTM F 1869. In all cases follow manufacturers recommendations. Allow surfaces to cure a minimum of 30 days before painting.

3.6.2 Gypsum Board, Plaster, and Stucco

a. Surface Cleaning: Plaster and stucco shall be clean and free from loose matter; gypsum board shall be dry. Remove loose dirt and dust by brushing with a soft brush, rubbing with a dry cloth, or vacuum-cleaning prior to application of the first coat material. A damp cloth or sponge may be used if paint will be water-based.

b. Repair of Minor Defects: Prior to painting, repair joints, cracks, holes, surface irregularities, and other minor defects with patching plaster or spackling compound and sand smooth.

c. Allowable Moisture Content: Latex coatings may be applied to damp surfaces, but not surfaces with droplets of water. Do not apply epoxies to damp surfaces as determined by ASTM D 4263. New plaster to be coated shall have a maximum moisture content of 8 percent, when measured in accordance with ASTM D 4444, Method A, unless otherwise authorized. In addition to moisture content requirements, allow new plaster to age a minimum of 30 days before preparation for painting.

3.6.3 Existing Asbestos Cement Surfaces

Remove oily stains by solvent cleaning with mineral spirits, MIL-PRF-680 or ASTM D 235. Remove loose dirt, dust, and other deleterious substances by brushing with a soft brush or rubbing with a dry cloth prior to application of the first coat material. Do not wire brush or clean using other abrasive methods. Surfaces shall be dry and clean prior to application of the coating.

3.7 PREPARATION OF WOOD AND PLYWOOD SURFACES

3.7.1 New, Existing Uncoated, and Existing Coated Plywood and Wood Surfaces, Except Floors:

a. Wood surfaces shall be cleaned of foreign matter.

Surface Cleaning: Surfaces shall be free from dust and other deleterious substances and in a condition approved by the Contracting Officer prior to receiving paint or other finish. Do not use water to clean uncoated wood. Scrape to remove loose coatings. Lightly sand to roughen the entire area of previously enamel-coated wood surfaces.

b. Removal of Fungus and Mold: Wash existing coated surfaces with a solution composed of 3 ounces (2/3 cup) trisodium phosphate, 1 ounce (1/3 cup) household detergent, 1 quart 5 percent sodium hypochlorite solution and 3 quarts of warm water. Rinse thoroughly with fresh water.

c. Moisture content of the wood shall not exceed 12 percent as measured by a moisture meter in accordance with ASTM D 4444, Method A, unless otherwise authorized.

d. Wood surfaces adjacent to surfaces to receive water-thinned paints shall be primed and/or touched up before applying water-thinned paints.
e. Cracks and Nailheads: Set and putty stop nailheads and putty cracks after the prime coat has dried.

f. Cosmetic Repair of Minor Defects:

(1) Knots and Resinous Wood and Fire, Smoke, Water, and Color Marker Stained Existing Coated Surface: Prior to application of coating, cover knots and stains with two or more coats of 3-pound-cut shellac varnish, plasticized with 5 ounces of castor oil per gallon. Scrape away existing coatings from knotty areas, and sand before treating. Prime before applying any putty over shellacked area.

(2) Open Joints and Other Openings: Fill with whiting putty, linseed oil putty. Sand smooth after putty has dried.

(3) Checking: Where checking of the wood is present, sand the surface, wipe and apply a coat of pigmented orange shellac. Allow to dry before paint is applied.

g. Prime Coat For New Exterior Surfaces: Prime coat wood doors, windows, frames, and trim before wood becomes dirty, warped, or weathered.

3.7.2 Wood Floor Surfaces, Natural Finish

a. Initial Surface Cleaning: As specified in paragraph entitled "Surface Preparation."

b. Existing Loose Boards and Shoe Molding: Before sanding, renail loose boards. Countersink nails and fill with an approved wood filler. Remove shoe molding before sanding and reinstall after completing other work. At Contractor's option, new shoe molding may be provided in lieu of reinstalling

old. New wood molding shall be same size, wood species, and finish as the existing.

c. Sanding and Scrape wood floors. Floors of oak or similar open-grain wood shall be filled with wood filler recommended by the finish manufacturer and the excess filler removed.

d. Final Cleaning: After sanding, sweep and vacuum floors clean. Do not walk on floors thereafter until specified sealer has been applied and is dry.

3.7.3 Interior Wood Surfaces, Stain Finish

Interior wood surfaces to receive stain shall be sanded. Oak and other open-grain wood to receive stain shall be given a coat of wood filler not less than 8 hours before the application of stain; excess filler shall be removed and the surface sanded smooth.

3.7.4 Water Blasting of Existing Coated Wood Surfaces:

Water blasting shall be provided for the following surfaces:

a. Sample Panel: Prior to the initial surface cleaning, water blast a representative surface designated by the Contracting Officer. Final surface condition of remaining work shall be similar to sample panel approved by the Contracting Officer.

b. Initial Surface Cleaning: Water blasting shall consist of washing surfaces to receive paint with a high pressure spray, to remove loose paint, dirt, and other foreign or deleterious materials. The working pressure shall be between 400 and 700 pounds per square inch gage (psig) at a nozzle operating rate of a minimum 20 gallons per minute (g/min.). Do not flood vents or damage windows and floors. If the pressure specified will cause damage to existing wood, advise the Contracting Officer and obtain permission to vary the pressure. Direct the wash nozzle at the surface at an angle of approximately 75 degrees with the surface and at a distance not greater than 5 feet to apply water pressure required to remove loose paint, dirt, chalking, and other foreign matter.

c. Final Surface Cleaning: After allowing the surfaces to dry for a minimum of 24 hours, remove remaining dirt, splinters, loose particles, disintegrated and loose paint, grease, oil, and other foreign matter from the surface.

3.8 APPLICATION

3.8.1 Coating Application

Painting practices shall comply with applicable federal, state and local laws enacted to insure compliance with Federal Clean Air Standards. Apply coating materials in accordance with SSPC PA 1. SSPC PA 1 methods are applicable to all substrates, except as modified herein.

At the time of application, paint shall show no signs of deterioration. Uniform suspension of pigments shall be maintained during application.

Unless otherwise specified or recommended by the paint manufacturer, paint may be applied by brush, roller, or spray. Use trigger operated spray nozzles for water hoses. Rollers for applying paints and enamels shall be

of a type designed for the coating to be applied and the surface to be coated. Wear protective clothing and respirators when applying oil-based paints or using spray equipment with any paints.

Paints, except water-thinned types, shall be applied only to surfaces that are completely free of moisture as determined by sight or touch.

Thoroughly work coating materials into joints, crevices, and open spaces. Special attention shall be given to insure that all edges, corners, crevices, welds, and rivets receive a film thickness equal to that of adjacent painted surfaces.

Each coat of paint shall be applied so dry film shall be of uniform thickness and free from runs, drops, ridges, waves, pinholes or other voids, laps, brush marks, and variations in color, texture, and finish. Hiding shall be complete.

Touch up damaged coatings before applying subsequent coats. Interior areas shall be broom clean and dust free before and during the application of coating material.

a. Drying Time: Allow time between coats, as recommended by the coating manufacturer, to permit thorough drying, but not to present topcoat adhesion problems. Provide each coat in specified condition to receive next coat.

b. Primers, and Intermediate Coats: Do not allow primers or intermediate coats to dry more than 30 days, or longer than recommended by manufacturer, before applying subsequent coats. Follow manufacturer's recommendations for surface preparation if primers or intermediate coats are allowed to dry longer than recommended by manufacturers of subsequent coatings. Each coat shall cover surface of preceding coat or surface completely, and there shall be a visually perceptible difference in shades of successive coats.

c. Finished Surfaces: Provide finished surfaces free from runs, drops, ridges, waves, laps, brush marks, and variations in colors.

d. Thermosetting Paints: Topcoats over thermosetting paints (epoxies and urethanes) should be applied within the overcoating window recommended by the manufacturer.

e. Floors: For nonslip surfacing on level floors, as the intermediate coat is applied, cover wet surface completely with almandite garnet, Grit No. 36, with maximum passing U.S. Standard Sieve No. 40 less than 0.5 percent. When the coating is dry, use a soft bristle broom to sweep up excess grit, which may be reused, and vacuum up remaining residue before application of the topcoat.] For nonslip surfacing on ramps, provide MPI 77 with non-skid additive, applied by roller in accordance with manufacturer's instructions.

3.8.2 Mixing and Thinning of Paints

Reduce paints to proper consistency by adding fresh paint, except when thinning is mandatory to suit surface, temperature, weather conditions, application methods, or for the type of paint being used. Obtain written permission from the Contracting Officer to use thinners. The written permission shall include quantities and types of thinners to use.

When thinning is allowed, paints shall be thinned immediately prior to application with not more than 1 pint of suitable thinner per gallon. The use of thinner shall not relieve the Contractor from obtaining complete hiding, full film thickness, or required gloss. Thinning shall not cause the paint to exceed limits on volatile organic compounds. Paints of different manufacturers shall not be mixed.

3.8.3 Two-Component Systems

Two-component systems shall be mixed in accordance with manufacturer's instructions. Any thinning of the first coat to ensure proper penetration and sealing shall be as recommended by the manufacturer for each type of substrate.

3.8.4 Coating Systems

a. Systems by Substrates: Apply coatings that conform to the respective coatings.

b. Minimum Dry Film Thickness (DFT): Apply paints, primers, varnishes, enamels, undercoats, and other coatings to a minimum dry film thickness of 1.5 mil each coat unless specified otherwise in the Tables. Coating thickness where specified, refers to the minimum dry film thickness.

c. Coatings for Surfaces Not Specified Otherwise: Coat surfaces which have not been specified, the same as surfaces having similar conditions of exposure.

d. Existing Surfaces Damaged During Performance of the Work, Including New Patches In Existing Surfaces: Coat surfaces with the following:

(1) One coat of primer.

(2) One coat of undercoat or intermediate coat.

(3) One topcoat to match adjacent surfaces.

e. Existing Coated Surfaces To Be Painted: Apply coatings conforming to the respective specifications listed in the Tables herein, except that pretreatments, sealers and fillers need not be provided on surfaces where existing coatings are soundly adhered and in good condition. Do not omit undercoats or primers.

3.9 COATING SYSTEMS FOR METAL

Apply coatings of Tables in Division 5 for Exterior and Interior.

a. Apply specified ferrous metal primer on the same day that surface is cleaned, to surfaces that meet all specified surface preparation requirements at time of application.

b. Inaccessible Surfaces: Prior to erection, use one coat of specified primer on metal surfaces that will be inaccessible after erection.

c. Shop-primed Surfaces: Touch up exposed substrates and damaged coatings to protect from rusting prior to applying field primer.

d. Surface Previously Coated with Epoxy or Urethane: Apply MPI 101, 1.5 mils DFT immediately prior to application of epoxy or urethane coatings.

e. Pipes and Tubing: The semitransparent film applied to some pipes and tubing at the mill is not to be considered a shop coat, but shall be overcoated with the specified ferrous-metal primer prior to application of finish coats.

f. Exposed Nails, Screws, Fasteners, and Miscellaneous Ferrous Surfaces. On surfaces to be coated with water thinned coatings, spot prime exposed nails and other ferrous metal with latex primer MPI 107.

3.10 COATING SYSTEMS FOR CONCRETE AND CEMENTITIOUS SUBSTRATES

Apply coatings of Tables in Division 3, 4 and 9 for Exterior and Interior.

3.11 COATING SYSTEMS FOR WOOD AND PLYWOOD

a. Apply coatings of Tables in Division 6 for Exterior and Interior.

b. Prior to erection, apply two coats of specified primer to treat and prime wood and plywood surfaces which will be inaccessible after erection.

c. Apply stains in accordance with manufacturer's printed instructions.

d. Wood Floors to Receive Natural Finish: Thin first coat 2 to 1 using thinner recommended by coating manufacturer. Apply all coatings at rate of 300 to 350 square feet per gallon. Apply second coat not less than 2 hours and not over 24 hours after first coat has been applied. Apply with lambs wool applicators or roller as recommended by coating manufacturer. Buff or lightly sand between intermediate coats as recommended by coating manufacturer's printed instructions.]

3.12 PIPING IDENTIFICATION

Piping Identification, Including Surfaces In Concealed Spaces: Provide in accordance with MIL-STD-101 or ASME A13.1]. Place stenciling in clearly visible locations. On piping not covered by MIL-STD-101 or ASME A13.1, stencil approved names or code letters, in letters a minimum of 1/2 inch high for piping and a minimum of 2 inches high elsewhere. Stencil arrow-shaped markings on piping to indicate direction of flow using black stencil paint.

3.13 INSPECTION AND ACCEPTANCE

In addition to meeting previously specified requirements, demonstrate mobility of moving components, including swinging and sliding doors, cabinets, and windows with operable sash, for inspection by the Contracting Officer. Perform this demonstration after appropriate curing and drying times of coatings have elapsed and prior to invoicing for final payment.

3.14 WASTE MANAGEMENT

As specified in the Waste Management Plan and as follows. Do not use kerosene or any such organic solvents to clean up water based paints. Properly dispose of paints or solvents in designated containers. Close and seal partially used containers of paint to maintain quality as necessary for

reuse. Store in protected, well-ventilated, fire-safe area at moderate temperature. Place materials defined as hazardous or toxic waste in designated containers. Coordinate with manufacturer for take-back program. Set aside scrap to be returned to manufacturer for recycling into new product. When such a service is not available, local recyclers shall be sought after to reclaim the materials. Set aside extra paint for future color matches or reuse by the Government. Where local options exist for leftover paint recycling, collect all waste paint by type and provide for delivery to recycling or collection facility for reuse by local organizations.

3.15 PAINT TABLES

All DFT's are minimum values. Use only materials with a GPS green check mark having a minimum MPI "Environmentally Friendly" E1 rating based on VOC (EPA Method 24) content levels. Use only interior paints and coatings that meet VOC requirements of LEED low emitting materials credit. Acceptable products are listed in the MPI Green Approved Products List, available at http://www.specifygreen.com/APL/ProductIdxByMPInum.asp.

3.15.1 EXTERIOR PAINT TABLES

DIVISION 3: EXTERIOR CONCRETE PAINT TABLE

A. New and uncoated existing and Existing, previously painted concrete; vertical surfaces, including undersides of balconies and soffits but excluding tops of slabs:

1. Latex
   New; MPI EXT 3.1A-G2 (Flat) / Existing; MPI REX 3.1A-G2 (Flat)
   Primer: Intermediate: Topcoat:
   MPI 10 MPI 10 MPI 10
   System DFT: 3.5 mils

   New; MPI EXT 3.1A-G5 (Semigloss) / Existing; MPI EXT 3.1A-G5 (Semigloss)
   Primer: Intermediate: Topcoat:
   MPI 11 MPI 11 MPI 11
   System DFT: 3.5 mils

   New; MPI EXT 3.1A-G6 (Gloss) / Existing; MPI REX 3.1A-G6 (Gloss)
   Primer: Intermediate: Topcoat:
   MPI 119 MPI 119 MPI 119
   System DFT: 3.5 mils

Primer as recommended by manufacturer. Topcoat: Coating to match adjacent surfaces.

B. New and uncoated existing and Existing, previously painted concrete, textured system; vertical surfaces, including undersides of balconies and soffits but excluding tops of slabs:

1. Latex Aggregate
   New; MPI EXT 3.1B-G2 (Flat) / Existing; MPI REX 3.1B-G2 (Flat)
   Primer: Intermediate: Topcoat:
   MPI 42 MPI 10 MPI 10
   System DFT: Per Manufacturer

New; MPI EXT 3.1B-G5 (Semigloss) / Existing; MPI REX 3.1B-G5 (Semigloss)

Primer:	Intermediate:	Topcoat:
MPI 42	MPI 11	MPI 11

System DFT: Per Manufacturer

New; MPI EXT 3.1B-G6 (Gloss) / Existing; MPI REX 3.1B-G6 (Gloss)

Primer:	Intermediate:	Topcoat:
MPI 42	MPI 119	MPI 119

System DFT: Per Manufacturer

Texture – Fine, Medium or Coarse. Surface preparation and number of coats in accordance with manufacturer's instructions. Topcoat: Coating to match adjacent surfaces.

C. New and uncoated existing and Existing, previously painted concrete, elastomeric System; vertical surfaces, including undersides of balconies and soffits but excluding tops of slabs:

1. Elastomeric Coating

New; MPI EXT 3.1F / Existing; MPI REX 3.1F

Primer:	Intermediate:	Topcoat:
Per Manufacturer	MPI 113	MPI 113

System DFT: 16 mils

Primer as recommended by manufacturer. Topcoat: Coating to match adjacent surfaces. Surface preparation and number of coats in accordance with manufacturer's instructions.

NOTE: Apply sufficient coats of MPI 113 to achieve a minimum dry film thickness of 16 mils.

D. New and uncoated existing and Existing, previously painted concrete: walls and bottom of swimming pools.

1. Chlorinated Rubber

New; / Existing;

Primer:	Intermediate:	Topcoat:
SSPC Paint 18	SSPC Paint 18	SSPC Paint 18

System DFT: Per Manufacturer

NOTE: Thin first coat (primer) with 1 part of approved thinner to 4 parts of paint by volume.

E. New and Existing Cementitious composition board (including Asbestos cement board):

1. Latex

New; MPI EXT 3.3A-G1 (Flat) /Existing; MPI REX 3.3A-G1 (Flat)

Primer:	Intermediate:	Topcoat:
MPI 10	MPI 10	MPI 10

System DFT: 4.5 mils

New; MPI EXT 3.3A-G5 (Semigloss) / Existing; MPI REX 3.3A-G5 (Semigloss)

Primer:	Intermediate:	Topcoat:
MPI 11	MPI 11	MPI 11

System DFT: 4.5 mils

New; MPI EXT 3.3A-G6 (Gloss) / Existing; MPI REX 3.3A-G6 (Gloss)

Primer:	Intermediate:	Topcoat:
MPI 119	MPI 119	MPI 119

System DFT: 4.5 mils

Topcoat: Coating to match adjacent surfaces.

DIVISION 4: EXTERIOR CONCRETE MASONRY UNITS PAINT TABLE

A. New and Existing concrete masonry on uncoated surface:

1. Latex

New; MPI EXT 4.2A-G1 (Flat) / Existing; MPI REX 4.2A-G1 (Flat)

Block Filler:	Primer:	Intermediate:	Topcoat:
MPI 4	N/A	MPI 10	MPI 10

System DFT: 11 mils

New; MPI EXT 4.2A-G5 (Semigloss) / Existing; MPI REX 4.2A-G5 (Semigloss)

Block Filler:	Primer:	Intermediate:	Topcoat:
MPI 4	N/A	MPI 11	MPI 11

System DFT: 11 mils]

New; MPI EXT 4.2A-G6 (Gloss) / Existing; MPI REX 4.2A-G6 (Gloss)

Block Filler:	Primer:	Intermediate:	Topcoat:
MPI 4	N/A	MPI 119	MPI 119

System DFT: 11 mils

Topcoat: Coating to match adjacent surfaces.

B. New and Existing concrete masonry, textured system; on uncoated surface:

1. Latex Aggregate

New; MPI EXT 4.2B-G1 (Flat) / Existing; MPI REX 4.2B-G1 (Flat)

Primer:	Intermediate:	Topcoat:
MPI 42	MPI 42	MPI 10

System DFT: Per Manufacturer

New; MPI EXT 4.2B-G5 (Semigloss) / Existing; MPI REX 4.2B-G5 (Semigloss)

Primer:	Intermediate:	Topcoat:
MPI 42	MPI 42	MPI 11

System DFT: Per Manufacturer

New; MPI EXT 4.2B-G6 (Gloss) / Existing; MPI REX 4.2B-G6 (Gloss)

Primer:	Intermediate:	Topcoat:
MPI 42	MPI 42	MPI 119

System DFT: Per Manufacturer

Texture – Fine, Medium or Coarse. Surface preparation and number of coats in accordance with manufacturer's instructions. Topcoat: Coating to match adjacent surfaces.

C. New and Existing concrete masonry, elastomeric system; on uncoated surface:

1. Elastomeric Coating
New; MPI EXT 4.2D / Existing; MPI REX 4.2D

Primer:	Intermediate:	Topcoat:
Per Manufacturer	MPI 113	MPI 113

System DFT: 16 mils

Primer as recommended by manufacturer. Topcoat: Coating to match adjacent surfaces. Surface preparation and number of coats in accordance with manufacturer's instructions.

NOTE: Apply sufficient coats of MPI 113 to achieve a minimum dry film thickness of 16 mils.

DIVISION 5: EXTERIOR METAL, FERROUS AND NON-FERROUS PAINT TABLE

STEEL / FERROUS SURFACES

A. New Steel that has been hand or power tool cleaned to SSPC SP 2 or SSPC SP 3:

1. Alkyd
New; MPI EXT 5.1Q-G5 (Semigloss) Existing; MPI REX 5.1D-G5

Primer:	Intermediate:	Topcoat:
MPI 23	MPI 94	MPI 94

System DFT: 5.25 mils

New; MPI EXT 5.1Q-G6 (Gloss) / Existing; MPI REX 5.1D-G6

Primer:	Intermediate:	Topcoat:
MPI 23	MPI 9	MPI 9

System DFT: 5.25 mils

B. New Steel that has been hand or power tool cleaned to SSPC SP 2 or SSPC SP 3:

2. Alkyd
New; MPI EXT 5.1D-G5 (Semigloss) / Existing; MPI REX 5.1D-G5

Primer:	Intermediate:	Topcoat:
MPI 79	MPI 94	MPI 94

System DFT: 5.25 mils]

New; MPI EXT 5.1D-G6 (Gloss) / Existing; MPI REX 5.1D-G6

Primer:	Intermediate:	Topcoat:
MPI 79	MPI 9	MPI 9

System DFT: 5.25 mils

C. Existing steel that has been hand or power tool cleaned to SSPC SP 2 or SSPC SP 3:

1. Surface previously coated with alkyd or latex:

Waterborne Light Industrial Coating
MPI REX 5.1C-G5 (Semigloss)

Spot Primer:	Intermediate:	Topcoat:
MPI 79	MPI 163	MPI 163

System DFT: 5 mils

MPI REX 5.1C-G6 (Gloss)

Spot Primer:	Intermediate:	Topcoat:
MPI 79	MPI 164	MPI 164

System DFT: 5 mils

2. Surface previously coated with epoxy:

Waterborne Light Industrial

a. MPI REX 5.1L-G5 (Semigloss)

Spot Primer:	Intermediate:	Topcoat:
MPI 101	MPI 163	MPI 163

System DFT: 5 mils

MPI REX 5.1L-G6 (Gloss)

Spot Primer:	Intermediate:	Topcoat:
MPI 101	MPI 164	MPI 164

System DFT: 5 mils

Pigmented Polyurethane

b. MPI REX 5.1H-G6 (Gloss)

Spot Primer:	Intermediate:	Topcoat:
MPI 101	MPI 108	MPI 72

System DFT: 8.5 mils

D. New and existing steel that has been hand or power tool cleaned to SSPC SP 2 or SSPC SP 3:

1. Waterborne Light Industrial

MPI EXT 5.1R-G5 (Semigloss)

Primer:	Intermediate:	Topcoat:
MPI 101	MPI 108	MPI 163

System DFT: 8.5 mils

MPI EXT 5.1R-G6 (Gloss)

Primer:	Intermediate:	Topcoat:
MPI 101	MPI 108	MPI 164

System DFT: 8.5 mils

2. Pigmented Polyurethane

MPI EXT 5.1J-G6 (Gloss)

Primer:	Intermediate:	Topcoat:
MPI 101	MPI 108	MPI 72

System DFT: 8.5 mils

E. Metal floors (non-shop-primed surfaces or non-slip deck surfaces) with non-skid additive (NSA), load at manufacturer's recommendations.:

1. Alkyd Floor Enamel

MPI EXT 5.1S-G6 (Gloss)

Primer:	Intermediate:	Topcoat:
MPI 79	MPI 27	MPI 27 (+NSA)

System DFT: 5.25 mils

EXTERIOR GALVANIZED SURFACES

F. New Galvanized surfaces:

1. Cementitious primer / Latex
   MPI EXT 5.3A-G1 (Flat)
   Primer: Intermediate: Topcoat:
   MPI 26 MPI 10 MPI 10
   System DFT: 4.5 mils

   MPI EXT 5.3A-G5 (Semigloss)
   Primer: Intermediate: Topcoat:
   MPI 26 MPI 11 MPI 11
   System DFT: 4.5 mils

   MPI EXT 5.3A-G6 (Gloss)
   Primer: Intermediate: Topcoat:
   MPI 26 MPI 119 MPI 119
   System DFT: 4.5 mils

2. Waterborne Primer / Latex
   MPI EXT 5.3H-G1 (Flat)
   Primer: Intermediate: Topcoat:
   MPI 134 MPI 10 MPI 10
   System DFT: 4.5 mils

   MPI EXT 5.3H-G5 (Semigloss)
   Primer: Intermediate: Topcoat:
   MPI 134 MPI 11 MPI 11
   System DFT: 4.5 mils]

   MPI EXT 5.3H-G6 (Gloss)
   Primer: Intermediate: Topcoat:
   MPI 134 MPI 119 MPI 119
   System DFT: 4.5 mils

3. Waterborne Primer / Waterborne Light Industrial Coating
   MPI EXT 5.3J-G5 (Semigloss)
   Primer: Intermediate: Topcoat:
   MPI 134 MPI 163 MPI 163
   System DFT: 4.5 mils

   MPI EXT 5.3J-G6 (Gloss)
   Primer: Intermediate: Topcoat:
   MPI 134 MPI 164 MPI 164
   System DFT: 4.5 mils

4. Epoxy Primer / Waterborne Light Industrial Coating
   MPI EXT 5.3K-G5 (Semigloss)
   Primer: Intermediate: Topcoat:
   MPI 101 MPI 163 MPI 163
   System DFT: 5 mils

   MPI EXT 5.3K-G6 (Gloss)
   Primer: Intermediate: Topcoat:
   MPI 101 MPI 164 MPI 164
   System DFT: 5 mils

5. Pigmented Polyurethane
   MPI EXT 5.3L-G6 (Gloss)

Primer:	Intermediate:	Topcoat:
MPI 101	N/A	MPI 72

   System DFT: 5 mils

G. Galvanized surfaces with slight coating deterioration; little or no rusting:

1. Waterborne Light Industrial Coating
   MPI REX 5.3J-G5 (Semigloss)

Primer:	Intermediate:	Topcoat:
MPI 134	N/A	MPI 163

   System DFT: 4.5 mils

2. Pigmented Polyurethane
   MPI REX 5.3D-G6 (Gloss)

Primer:	Intermediate:	Topcoat:
MPI 101	N/A	MPI 72

   System DFT: 5 mils

H. Galvanized surfaces with severely deteriorated coating or rusting:

1. Waterborne Light Industrial Coating
   MPI REX 5.3L-G5(Semigloss)

Primer:	Intermediate:	Topcoat:
MPI 101	MPI 108	MPI 163

   System DFT: 8.5 mils

   MPI REX 5.3L-G6(Gloss)

Primer:	Intermediate:	Topcoat:
MPI 101	MPI 108	MPI 164

   System DFT: 8.5 mils

2. Pigmented Polyurethane
   MPI REX 5.3K-G6(Gloss)

Primer:	Intermediate:	Topcoat:
MPI 101	MPI 108	MPI 72

   System DFT: 5 mils

EXTERIOR SURFACES, OTHER METALS (NON-FERROUS)

I. Aluminum, aluminum alloy and other miscellaneous non-ferrous metal items not otherwise specified except hot metal surfaces, roof surfaces, and new prefinished equipment. Match surrounding finish:

1. Alkyd
   MPI EXT 5.4F-G1 (Flat)

Primer:	Intermediate:	Topcoat:
MPI 95	MPI 8	MPI 8

   System DFT: 5 mils

   MPI EXT 5.4F-G5 (Semigloss)

Primer:	Intermediate:	Topcoat:
MPI 95	MPI 94	MPI 94

   System DFT: 5 mils

MPI EXT 5.4F-G6 (Gloss)

Primer:	Intermediate:	Topcoat:
MPI 95	MPI 9	MPI 9

System DFT: 5 mils

2. Waterborne Light Industrial Coating

MPI EXT 5.4G-G3(Eggshell)

Primer:	Intermediate:	Topcoat:
MPI 95	MPI 161	MPI 161

System DFT: 5 mils

MPI EXT 5.4G-G5(Semigloss)

Primer:	Intermediate:	Topcoat:
MPI 95	MPI 163	MPI 163

System DFT: 5 mils

MPI EXT 5.4G-G6(Gloss)

Primer:	Intermediate:	Topcoat:
MPI 95	MPI 164	MPI 164

System DFT: 5 mils

I. Existing roof surfaces previously coated: NOT USED

J. Surfaces adjacent to painted surfaces; Mechanical, Electrical, Fire extinguishing sprinkler systems including valves, conduit, hangers, supports, exposed copper piping, and miscellaneous metal items not otherwise specified except floors, hot metal surfaces, and new prefinished equipment. Match surrounding finish:

1. Alkyd

MPI EXT 5.1D-G1 (Flat)

Primer:	Intermediate:	Topcoat:
MPI 79	MPI 8	MPI 8

System DFT: 5.25 mils

MPI EXT 5.1D-G5 (Semigloss)

Primer:	Intermediate:	Topcoat:
MPI 79	MPI 94	MPI 94

System DFT: 5.25 mils

MPI EXT 5.1D-G6 (Gloss)

Primer:	Intermediate:	Topcoat:
MPI 79	MPI 9	MPI 9

System DFT: 5.25 mils

2. Waterborne Light Industrial Coating

MPI EXT 5.1C-G3(Eggshell)

Primer:	Intermediate:	Topcoat:
MPI 79	MPI 161	MPI 161

System DFT: 5 mils

MPI EXT 5.1C-G5(Semigloss)

Primer:	Intermediate:	Topcoat:
MPI 79	MPI 163	MPI 163

System DFT: 5 mils

MPI EXT 5.1C-G6(Gloss)

Primer:	Intermediate:	Topcoat:
MPI 79	MPI 164	MPI 164

System DFT: 5 mils

K. Hot metal surfaces including smokestacks subject to temperatures up to 400 degrees F:

1. Heat Resistant Enamel
MPI EXT 5.2A

Primer:	Intermediate:	Topcoat:
MPI 21	Surface preparation and number of coats per manufacturer's instructions.	

System DFT: Per Manufacturer

L. Ferrous metal subject to high temperature, up to 750 degrees F:

1. Inorganic Zinc Rich Coating
MPI EXT 5.2C

Primer:	Intermediate:	Topcoat:
MPI 19	Surface preparation and number of coats per manufacturer's instructions.	

System DFT: Per Manufacturer

2. Heat Resistant Aluminum Enamel
MPI EXT 5.2B (Aluminum Finish)

Primer:	Intermediate:	Topcoat:
MPI 2	Surface preparation and number of coats per manufacturer's instructions.	

System DFT: Per Manufacturer

M. New surfaces and Existing surfaces subject to temperatures up to 593 degrees C (1100 degrees F):

1. Heat Resistant Coating
MPI EXT 5.2D

Primer:	Intermediate:	Topcoat:
MPI 22	Surface preparation and number of coats per manufacturer's instructions.	

System DFT: Per Manufacturer

DIVISION 6: EXTERIOR WOOD; DRESSED LUMBER, PANELING, DECKING PAINT TABLE

A. New and Existing, uncoated Dressed lumber, Wood and plywood, trim, including top, bottom and edges of doors not otherwise specified:

1. Alkyd
MPI EXT 6.3B-G5 (Semigloss)

Primer:	Intermediate:	Topcoat:
MPI 7	MPI 94	MPI 94

System DFT: 5 mils

MPI EXT 6.3B-G6 (Gloss)

Primer:	Intermediate:	Topcoat:
MPI 7	MPI 9	MPI 9

System DFT: 5 mils

2. Latex
   MPI EXT 6.3A-G1 (Flat)

Primer:	Intermediate:	Topcoat:
MPI 7	MPI 10	MPI 10

   System DFT: 5 mils

   MPI EXT 6.3A-G5 (Semigloss)

Primer:	Intermediate:	Topcoat:
MPI 7	MPI 11	MPI 11

   System DFT: 5 mils

   MPI EXT 6.3A-G6 (Gloss)

Primer:	Intermediate:	Topcoat:
MPI 7	MPI 119	MPI 119

   System DFT: 5 mils

3. Waterborne Solid Color Stain
   MPI EXT 6.3K

Primer:	Intermediate:	Topcoat:
MPI 7	MPI 16	MPI 16

   System DFT: 4.25 mils

B. Existing, dressed lumber, Wood and plywood, trim, including top, bottom and edges of doors previously coated with an alkyd / oil based finish coat not otherwise specified:

1. Alkyd
   MPI REX 6.3B-G5 (Semigloss)

Primer:	Intermediate:	Topcoat:
MPI 5	MPI 94	MPI 94

   System DFT: 5 mils

   MPI REX 6.3B-G6 (Gloss)

Primer:	Intermediate:	Topcoat:
MPI 5	MPI 9	MPI 9

   System DFT: 5 mils

2. Latex
   MPI REX 6.3A-G1 (Flat)

Primer:	Intermediate:	Topcoat:
MPI 5	MPI 10	MPI 10

   System DFT: 5 mils

   MPI REX 6.3A-G5 (Semigloss)

Primer:	Intermediate:	Topcoat:
MPI 5	MPI 11	MPI 11

   System DFT: 5 mils

   MPI REX 6.3A-G6 (Gloss)

Primer:	Intermediate:	Topcoat:
MPI 5	MPI 119	MPI 119

   System DFT: 5 mils

C. Existing, dressed lumber, Wood and plywood, trim, including top, bottom and edges of doors previously coated with a latex / waterborne finish coat not otherwise specified:

1. Latex
   MPI REX 6.3L-G1 (Flat)
   Spot Primer: Intermediate: Topcoat:
   MPI 6 MPI 10 MPI 10
   System DFT: 4.5 mils

   MPI REX 6.3L-G5 (Semigloss)
   Spot Primer: Intermediate: Topcoat:
   MPI 6 MPI 11 MPI 11
   System DFT: 4.5 mils

   MPI REX 6.3L-G6 (Gloss)
   Spot Primer: Intermediate: Topcoat:
   MPI 6 MPI 119 MPI 119
   System DFT: 4.5 mils

2. Waterborne Solid Color Stain
   MPI REX 6.3K (Stain)
   Spot Primer: Intermediate: Topcoat:
   MPI 6 MPI 16 MPI 16
   System DFT: 4 mils

D. Wood: Steps, platforms, floors of open porches, and with non-skid additive (NSA), load at manufacturer's recommendations:

1. Latex Floor Paint
   MPI EXT 6.5A-G2 (Flat)
   Primer: Intermediate: Topcoat:
   MPI 5 MPI 60 +NSA MPI 60 +NSA
   System DFT: 4.5 mils

   MPI EXT 6.5A-G6 (Gloss)
   Primer: Intermediate: Topcoat:
   MPI 5 MPI 68 +NSA MPI 68 +NSA
   System DFT: 4.5 mils

2. Alkyd Floor Paint
   MPI EXT 6.5B-G2 (Flat)
   Primer: Intermediate: Topcoat:
   MPI 59 MPI 59 +NSA MPI 59 +NSA
   System DFT: 5 mils

   MPI EXT 6.5B-G6 (Gloss)
   Primer: Intermediate: Topcoat:
   MPI 27 MPI 27 +NSA MPI 27 +NSA
   System DFT: 5 mils

DIVISION 9: EXTERIOR STUCCO PAINT TABLE

A. New and Existing stucco:

1. Latex
   New; MPI EXT 9.1A-G1 (Flat) / Existing; MPI REX 9.1A-G2 (Flat)
   Primer: Intermediate: Topcoat:
   MPI 10 MPI 10 MPI 10
   System DFT: 4.5 mils

New; MPI EXT 9.1A-G5 (Semigloss) / Existing; MPI REX 9.1A-G5 (Semigloss)

Primer:	Intermediate:	Topcoat:
MPI 11	MPI 11	MPI 11

System DFT: 4.5 mils

New; MPI EXT 9.1A-G6 (Gloss) / Existing; MPI REX 9.1A-G6 (Gloss)

Primer:	Intermediate:	Topcoat:
MPI 119	MPI 119	MPI 119

System DFT: 4.5 mils

Primer as recommended by manufacturer. Topcoat: Coating to match adjacent surfaces. On existing stucco, apply primer based on surface condition.]

B. New and Existing] stucco, elastomeric system:

1. Elastomeric Coating
New; MPI EXT 9.1C / Existing; MPI REX 9.1C

Primer:	Intermediate:	Topcoat:
N/A	MPI 113	MPI 113

System DFT: 16 mils

Primer as recommended by manufacturer. Topcoat: Coating to match adjacent surfaces. Surface preparation and number of coats in accordance with manufacturer's instructions).

NOTE: Apply sufficient coats of MPI 113 to achieve a minimum dry film thickness of 16 mils.

DIVISION 10: EXTERIOR CLOTH COVERINGS AND BITUMINOUS COATED SURFACES PAINT TABLE

A. Insulation and surfaces of insulation coverings (canvas, cloth, paper): (Interior and Exterior Applications)

1. Latex
MPI EXT 10.1A-G1 (Flat)

Primer:	Intermediate:	Topcoat:
N/A	MPI 10	MPI 10

System DFT: 3.2 mils

MPI EXT 10.1A-G5 (Semigloss)

Primer:	Intermediate:	Topcoat:
N/A	MPI 11	MPI 11

System DFT: 3.2 mils

MPI EXT 10.1A-G6 (Gloss)

Primer:	Intermediate:	Topcoat:
N/A	MPI 119	MPI 119

System DFT: 3.2 mils

Topcoat: Coating to match adjacent surfaces.

3.15.2 INTERIOR PAINT TABLES

DIVISION 3: INTERIOR CONCRETE PAINT TABLE

A. New and uncoated existing and Existing, previously painted Concrete, vertical surfaces, not specified otherwise:

1. Latex
   New; MPI INT 3.1A-G2 (Flat) / Existing; MPI RIN 3.1A-G2 (Flat)
   Primer: Intermediate: Topcoat:
   MPI 50 MPI 44 MPI 44
   System DFT: 4 mils

   New; MPI INT 3.1A-G3 (Eggshell) / Existing; MPI RIN 3.1A-G3 (Eggshell)
   Primer: Intermediate: Topcoat:
   MPI 50 MPI 52 MPI 52
   System DFT: 4 mils

   New; MPI INT 3.1A-G5 (Semigloss) / Existing; MPI RIN 3.1A-G5 (Semigloss)
   Primer: Intermediate: Topcoat:
   MPI 50 MPI 54 MPI 54
   System DFT: 4 mils

2. High Performance Architectural Latex
   New; MPI INT 3.1C-G2 (Flat) / Existing; MPI RIN 3.1J-G2 (Flat)
   Primer: Intermediate: Topcoat:
   MPI 50 MPI 138 MPI 138
   System DFT: 4 mils

   New; MPI INT 3.1C-G3 (Eggshell) / Existing; MPI RIN 3.1J-G3 (Eggshell)
   Primer: Intermediate: Topcoat:
   MPI 50 MPI 139 MPI 139
   System DFT: 4 mils

   New; MPI INT 3.1C-G4 (satin)/ Existing; MPI RIN 3.1J-G4
   Primer: Intermediate: Topcoat:
   MPI 50 MPI 140 MPI 140
   System DFT: 4 mils

   New; MPI INT 3.1C-G5 (Semigloss) / Existing; MPI RIN 3.1J-G5 (Semigloss)
   Primer: Intermediate: Topcoat:
   MPI 50 MPI 141 MPI 141
   System DFT: 4 mils

3. Institutional Low Odor / Low VOC Latex
   New; MPI INT 3.1M-G2 (Flat) / Existing; MPI RIN 3.1L-G2 (Flat)
   Primer: Intermediate: Topcoat:
   MPI 50 MPI 144 MPI 144
   System DFT: 4 mils

   New; MPI INT 3.1M-G3 (Eggshell) / Existing; MPI RIN 3.1L-G3 (Eggshell)
   Primer: Intermediate: Topcoat:
   MPI 50 MPI 145 MPI 145
   System DFT: 4 mils

New; MPI INT 3.1M-G4 (satin)/ Existing; MPI RIN 3.1L-G4

Primer:	Intermediate:	Topcoat:
MPI 50	MPI 146	MPI 146

System DFT: 4 mils

New; MPI INT 3.1M-G5 (Semigloss) / Existing; MPI RIN 3.1L-G5 (Semigloss)

Primer:	Intermediate:	Topcoat:
MPI 50	MPI 147	MPI 147

System DFT: 4 mils

B. Concrete ceilings, uncoated:

1. Latex Aggregate
MPI INT 3.1N

Primer:	Intermediate:	Topcoat:
N/A	N/A	MPI 42

System DFT: Per Manufacturer

Texture – Fine, Medium or Coarse. Surface preparation, number of coats, and primer in accordance with manufacturer's instructions. Topcoat: Coating to match adjacent surfaces.

DIVISION 4: INTERIOR CONCRETE MASONRY UNITS PAINT TABLE

A. New and uncoated Existing Concrete masonry:

1. High Performance Architectural Latex
MPI INT 4.2D-G2 (Flat)

Filler	Primer:	Intermediate:	Topcoat:
MPI 4	N/A	MPI 138	MPI 138

System DFT: 11 mils

MPI INT 4.2D-G3 (Eggshell)

Filler	Primer:	Intermediate:	Topcoat:
MPI 4	N/A	MPI 139	MPI 139

System DFT: 11 mils

MPI INT 4.2D-G4 (Satin)

Filler	Primer:	Intermediate:	Topcoat:
MPI 4	N/A	MPI 140	MPI 140

System DFT: 11 mils

MPI INT 4.2D-G5 (Semigloss)

Filler	Primer:	Intermediate:	Topcoat:
MPI 4	N/A	MPI 141	MPI 141

System DFT: 11 mils

Fill all holes in masonry surface

2. Institutional Low Odor / Low VOC Latex
New; MPI INT 4.2E-G2 (Flat)

Filler	Primer:	Intermediate:	Topcoat:
MPI 4	N/A	MPI 144	MPI 144

System DFT: 4 mils

New; MPI INT 4.2E-G3 (Eggshell)

Filler	Primer:	Intermediate:	Topcoat:
MPI 4	N/A	MPI 145	MPI 145

System DFT: 4 mils

New; MPI INT 4.2E-G4 (Satin)

Filler	Primer:	Intermediate:	Topcoat:
MPI 4	N/A	MPI 146	MPI 146

System DFT: 4 mils

New; MPI INT 4.2E-G5 (Semigloss)

Filler	Primer:	Intermediate:	Topcoat:
MPI 4	N/A	MPI 147	MPI 147

System DFT: 4 mils

B. Existing, previously painted Concrete masonry:

1. High Performance Architectural Latex

MPI RIN 4.2K-G2 (Flat)

Spot Primer:	Intermediate:	Topcoat:
MPI 50	MPI 138	MPI 138

System DFT: 4.5 mils

MPI RIN 4.2K-G3 (Eggshell)

Spot Primer:	Intermediate:	Topcoat:
MPI 50	MPI 139	MPI 139

System DFT: 4.5 mils

MPI RIN 4.2K-G4

Spot Primer:	Intermediate:	Topcoat:
MPI 50	MPI 140	MPI 140

System DFT: 4.5 mils

MPI RIN 4.2K-G5 (Semigloss)

Spot Primer:	Intermediate:	Topcoat:
MPI 50	MPI 141	MPI 141

System DFT: 4.5 mils

2. Institutional Low Odor / Low VOC Latex

Existing; MPI RIN 4.2L-G2 (Flat)

Spot Primer:	Intermediate:	Topcoat:
MPI 50	MPI 144	MPI 144

System DFT: 4 mils

Existing; MPI RIN 4.2L-G3 (Eggshell)

Spot Primer:	Intermediate:	Topcoat:
MPI 50	MPI 145	MPI 145

System DFT: 4 mils

Existing; MPI RIN 4.2L-G4 (Satin)

Spot Primer:	Intermediate:	Topcoat:
MPI 50	MPI 146	MPI 146

System DFT: 4 mils

Existing; MPI RIN 4.2L-G5 (Semigloss)

Spot Primer:	Intermediate:	Topcoat:
MPI 50	MPI 147	MPI 147

System DFT: 4 mils

C. New and uncoated Existing type concrete masonry units in toilets, food-preparation, food-serving, restrooms, laundry areas, shower areas, areas requiring a high degree of sanitation, and other high humidity areas unless otherwise specified:

1. Waterborne Light Industrial Coating
   MPI INT 4.2K-G3(Eggshell)

Filler:	Primer:	Intermediate:	Topcoat:
MPI 4	N/A	MPI 151	MPI 151

   System DFT: 11 mils

   MPI INT 4.2K-G5(Semigloss)

Filler:	Primer:	Intermediate:	Topcoat:
MPI 4	N/A	MPI 153	MPI 153

   System DFT: 11 mils

   MPI INT 4.2K-G6(Gloss)

Filler:	Primer:	Intermediate:	Topcoat:
MPI 4	N/A	MPI 154	MPI 154

   System DFT: 11 mils

   Fill all holes in masonry surface

2. Alkyd
   MPI INT 4.2N-G3 (Eggshell)

Filler:	Primer:	Intermediate:	Topcoat:
MPI 4	MPI 50	MPI 51	MPI 51

   System DFT: 12 mils

   MPI INT 4.2N-G5 (Semigloss)

Filler:	Primer:	Intermediate:	Topcoat:
MPI 4	MPI 50	MPI 47	MPI 47

   System DFT: 12 mils

   MPI INT 4.2N-G6 (Gloss)

Filler:	Primer:	Intermediate:	Topcoat:
MPI 4	MPI 50	MPI 48	MPI 48

   System DFT: 12 mils

   Fill all holes in masonry surface]

3. Epoxy
   MPI INT 4.2G-G6 (Gloss)

Filler:	Primer:	Intermediate:	Topcoat:
MPI 116	N/A	MPI 77	MPI 77

   System DFT: 10 mils

   Fill all holes in masonry surface

D. New and uncoated Existing type concrete masonry units in toilets, food-preparation, food-serving, restrooms, laundry areas, shower areas, areas requiring a high degree of sanitation, and other high humidity areas unless otherwise specified:

1. Waterborne Light Industrial Coating
   MPI RIN 4.2G-G3(Eggshell)
   Spot Primer: Intermediate: Topcoat:
   MPI 151 MPI 151 MPI 151
   System DFT: 4.5 mils

   MPI RIN 4.2G-G5(Semigloss)
   Spot Primer: Intermediate: Topcoat:
   MPI 153 MPI 153 MPI 153
   System DFT: 4.5 mils

   MPI RIN 4.2G-G6(Gloss)
   Spot Primer: Intermediate: Topcoat:
   MPI 154 MPI 154 MPI 154
   System DFT: 4.5 mils

2. Alkyd
   MPI RIN 4.2C-G3 (Eggshell)
   Spot Primer: Intermediate: Topcoat:
   MPI 50 MPI 51 MPI 51
   System DFT: 4.5 mils

   MPI RIN 4.2C-G5 (Semigloss)
   Spot Primer: Intermediate: Topcoat:
   MPI 50 MPI 47 MPI 47
   System DFT: 4.5 mils

   MPI RIN 4.2C-G6 (Gloss)
   Spot Primer: Intermediate: Topcoat:
   MPI 50 MPI 48 MPI 48
   System DFT: 4.5 mils

3. Epoxy
   MPI RIN 4.2D-G6 (Gloss)
   Spot Primer: Intermediate: Topcoat:
   MPI 77 MPI 77 MPI 77
   System DFT: 5 mils

DIVISION 6: INTERIOR WOOD PAINT TABLE

A. New and Existing, uncoated Wood and plywood not otherwise specified:

1. High Performance Architectural Latex
   MPI INT 6.4S-G3 (Eggshell)
   Primer: Intermediate: Topcoat:
   MPI 39 MPI 139 MPI 139
   System DFT: 4.5 mils

   MPI INT 6.4S-G4 (Satin)
   Primer: Intermediate: Topcoat:
   MPI 39 MPI 140 MPI 140
   System DFT: 4.5 mils

   MPI INT 6.4S-G5 (Semigloss)
   Primer: Intermediate: Topcoat:
   MPI 39 MPI 141 MPI 141
   System DFT: 4.5 mils

2. Alkyd
   MPI INT 6.4B-G3 (Eggshell)

Primer:	Intermediate:	Topcoat:
MPI 45	MPI 51	MPI 51

   System DFT: 4.5 mils

   MPI INT 6.4B-G5 (Semigloss)

Primer:	Intermediate:	Topcoat:
MPI 45	MPI 47	MPI 47

   System DFT: 4.5 mils

   MPI INT 6.4B-G6 (Gloss)

Primer:	Intermediate:	Topcoat:
MPI 45	MPI 48	MPI 48

   System DFT: 4.5 mils

3. Institutional Low Odor / Low VOC Latex
   New; MPI INT 6.3V-G2 (Flat)

Primer:	Intermediate:	Topcoat:
MPI 39	MPI 144	MPI 144

   System DFT: 4 mils

   New; MPI INT 6.3V-G3 (Eggshell)

Primer:	Intermediate:	Topcoat:
MPI 39	MPI 145	MPI 145

   System DFT: 4 mils

   New; MPI INT 6.3V-G4

Primer:	Intermediate:	Topcoat:
MPI 39	MPI 146	MPI 146

   System DFT: 4 mils

   New; MPI INT 6.3V-G5 (Semigloss)

Primer:	Intermediate:	Topcoat:
MPI 39	MPI 147	MPI 147

   System DFT: 4 mils

B. Existing, previously painted Wood and plywood not otherwise specified:

1. High Performance Architectural Latex
   MPI RIN 6.4B-G3 (Eggshell)

Primer:	Intermediate:	Topcoat:
MPI 46	MPI 139	MPI 139

   System DFT: 4.5 mils

   MPI RIN 6.4B-G4 (Satin)

Primer:	Intermediate:	Topcoat:
MPI 46	MPI 140	MPI 140

   System DFT: 4.5 mils

   MPI RIN 6.4B-G5 (Semigloss)

Primer:	Intermediate:	Topcoat:
MPI 46	MPI 141	MPI 141

   System DFT: 4.5 mils

2. Alkyd
   MPI RIN 6.4C-G3 (Eggshell)

Primer:	Intermediate:	Topcoat:
MPI 46	MPI 51	MPI 51

   System DFT: 4.5 mils

   MPI RIN 6.4C-G5 (Semigloss)

Primer:	Intermediate:	Topcoat:
MPI 46	MPI 47	MPI 47

   System DFT: 4.5 mils

   MPI RIN 6.4C-G6 (Gloss)

Primer:	Intermediate:	Topcoat:
MPI 46	MPI 48	MPI 48

   System DFT: 4.5 mils

3. Institutional Low Odor / Low VOC Latex
   Existing; MPI RIN 6.4D-G2 (Flat)

Primer:	Intermediate:	Topcoat:
MPI 39	MPI 144	MPI 144

   System DFT: 4 mils

   Existing; MPI RIN 6.4D-G3 (Eggshell)

Primer:	Intermediate:	Topcoat:
MPI 39	MPI 145	MPI 145

   System DFT: 4 mils

   Existing; MPI RIN 6.4D-G4

Primer:	Intermediate:	Topcoat:
MPI 39	MPI 146	MPI 146

   System DFT: 4 mil

   Existing; MPI RIN 6.4D-G5 (Semigloss)

Primer:	Intermediate:	Topcoat:
MPI 39	MPI 147	MPI 147

   System DFT: 4 mils

C. New and Existing, previously finished or stained Wood and Plywood, except floors; natural finish or stained:

1. Natural finish, oil-modified polyurethane
   New; MPI INT 6.4J-G4 / Existing; MPI RIN 6.4L-G4

Primer:	Intermediate:	Topcoat:
MPI 57	MPI 57	MPI 57

   System DFT: 4 mils

   New; MPI INT 6.4J-G6 (Gloss) / Existing; MPI RIN 6.4L-G6 (Gloss)

Primer:	Intermediate:	Topcoat:
MPI 56	MPI 56	MPI 56

   System DFT: 4 mils

2. Stained, oil-modified polyurethane
   New; MPI INT 6.4E-G4 / Existing; MPI RIN 6.4G-G4

Stain:	Primer:	Intermediate:	Topcoat:
MPI 90	MPI 57	MPI 57	MPI 57

   System DFT: 4 mils

New; MPI INT 6.4E-G6 (Gloss) / Existing; MPI RIN 6.4G-G6 (Gloss)

Stain:	Primer:	Intermediate:	Topcoat:
MPI 90	MPI 56	MPI 56	MPI 56

System DFT: 4 mils

3. Stained, Moisture Cured Urethane
New; MPI INT 6.4V-G2 (Flat) / Existing; MPI RIN 6.4V-G2 (Flat)

Stain:	Primer:	Intermediate:	Topcoat:
MPI 90	MPI 71	MPI 71	MPI 71

System DFT: 4 mils

New; MPI INT 6.4V-G6 (Gloss) / Existing; MPI RIN 6.4V-G6 (Gloss)

Stain:	Primer:	Intermediate:	Topcoat:
MPI 90	MPI 31	MPI 31	MPI 31

System DFT: 4 mils

D. New and Existing, previously finished or stained Wood Floors; Natural finish or stained:

1. Natural finish, oil-modified polyurethane
New; MPI INT 6.5C-G6 (Gloss) / Existing; MPI RIN 6.5C-G6 (Gloss)

Primer:	Intermediate:	Topcoat:
MPI 56	MPI 56	MPI 56

System DFT: 4 mils

2. Natural finish, Moisture Cured Polyurethane
New; MPI INT 6.5K-G6 (Gloss) / Existing; MPI RIN 6.5D-G6 (Gloss)

Primer:	Intermediate:	Topcoat:
MPI 31	MPI 31	MPI 31

System DFT: 4 mils

3. Stained, oil-modified polyurethane
New; MPI INT 6.5B-G6 (Gloss) / Existing; MPI RIN 6.5B-G6 (Gloss)

Stain:	Primer:	Intermediate:	Topcoat:
MPI 90	MPI 56	MPI 56	MPI 56

System DFT: 4 mils

4. Stained, Moisture Cured Polyurethane
New; MPI INT 6.5J-G6 (Gloss) / Existing; MPI RIN 6.5L-G6 (Gloss)

Stain:	Primer:	Intermediate:	Topcoat:
MPI 90	MPI 31	MPI 31	MPI 31

System DFT: 4 mils

E. New and Existing, previously coated Wood floors; pigmented finish:

1. Latex Floor Paint
New; MPI INT 6.5G-G2 (Flat) / Existing; MPI RIN 6.5J-G2 (Flat)

Primer:	Intermediate:	Topcoat:
MPI 45	MPI 60	MPI 60

System DFT: 4.5 mils

New; MPI INT 6.5G-G6 (Gloss) / Existing; MPI RIN 6.5J-G6 (Gloss)

Primer:	Intermediate:	Topcoat:
MPI 45	MPI 68	MPI 68

System DFT: 4.5 mils

2. Alkyd Floor Paint
   New; MPI INT 6.5A-G2 (Flat) / Existing; MPI RIN 6.5A-G2 (Flat)

Primer:	Intermediate:	Topcoat:
MPI 59	MPI 59	MPI 59

   System DFT: 4.5 mils

   New; MPI INT 6.5A-G6 (Gloss) / Existing; MPI RIN 6.5A-G6 (Gloss)

Primer:	Intermediate:	Topcoat:
MPI 27	MPI 27	MPI 27

   System DFT: 4.5 mils

F. not used

G. not used

H. New and Existing, previously finished or stained Wood Doors; Natural Finish or Stained:

1. Natural finish, oil-modified polyurethane
   New; MPI INT 6.3K-G4 / Existing; MPI RIN 6.3K-G4

Primer:	Intermediate:	Topcoat:
MPI 57	MPI 57	MPI 57

   System DFT: 4 mils

   New; MPI INT 6.3K-G6 (Gloss) / Existing; MPI RIN 6.3K-G6 (Gloss)

Primer:	Intermediate:	Topcoat:
MPI 56	MPI 56	MPI 56

   System DFT: 4 mils

   Note: Sand between all coats per manufacturers recommendations.

2. Stained, oil-modified polyurethane
   New; MPI INT 6.3E-G4 / Existing; MPI RIN 6.3E-G4

Stain:	Primer:	Intermediate:	Topcoat:
MPI 90	MPI 57	MPI 57	MPI 57

   System DFT: 4 mil

   New; MPI INT 6.3E-G6 (Gloss) / Existing; MPI RIN 6.3E-G6 (Gloss)

Stain:	Primer:	Intermediate:	Topcoat:
MPI 90	MPI 56	MPI 56	MPI 56

   System DFT: 4 mils

   Note: Sand between all coats per manufacturers recommendations.

3. Stained, Moisture Cured Urethane
   New; MPI INT 6.4V-G2 (Flat) / Existing; MPI RIN 6.4V-G2 (Flat)

Stain:	Primer:	Intermediate:	Topcoat:
MPI 90	MPI 71	MPI 71	MPI 71

   System DFT: 4 mils

   New; MPI INT 6.4V-G6 (Gloss) / Existing; MPI RIN 6.4V-G6 (Gloss)

Stain:	Primer:	Intermediate:	Topcoat:
MPI 90	MPI 31	MPI 31	MPI 31

   System DFT: 4 mils

   Note: Sand between all coats per manufacturers recommendations.

I. New and Existing, uncoated Wood Doors; Pigmented finish:

1. Alkyd
New; MPI INT 6.3B-G5 (Semigloss)

Primer:	Intermediate:	Topcoat:
MPI 45	MPI 47	MPI 47

System DFT: 4.5 mils

New; MPI INT 6.3B-G6 (Gloss)

Primer:	Intermediate:	Topcoat:
MPI 45	MPI 48	MPI 48

System DFT: 4.5 mils

Note: Sand between all coats per manufacturers recommendations.

2. Pigmented Polyurethane
New; MPI INT 6.1E-G6 (Gloss)

Primer:	Intermediate:	Topcoat:
MPI 72	MPI 72	MPI 72

System DFT: 4.5 mils

Note: Sand between all coats per manufacturers recommendations.

J. Existing, previously painted Wood Doors; Pigmented finish:

1. Alkyd
New; MPI RIN 6.3B-G5 (Semigloss)

Primer:	Intermediate:	Topcoat:
MPI 46	MPI 47	MPI 47

System DFT: 4.5 mils

New; MPI RIN 6.3B-G6 (Gloss)

Primer:	Intermediate:	Topcoat:
MPI 46	MPI 48	MPI 48

System DFT: 4.5 mils

Note: Sand between all coats per manufacturers recommendations.

DIVISION 9: INTERIOR PLASTER, GYPSUM BOARD, TEXTURED SURFACES PAINT TABLE

A. New and Existing, previously painted Plaster and Wallboard not otherwise specified:

1. Latex
New; MPI INT 9.2A-G2 (Flat) / Existing; RIN 9.2A-G2 (Flat)

Primer:	Intermediate:	Topcoat:
MPI 50	MPI 44	MPI 44

System DFT: 4 mils

New; MPI INT 9.2A-G3 (Eggshell) / Existing; RIN 9.2A-G3 (Eggshell)

Primer:	Intermediate:	Topcoat:
MPI 50	MPI 52	MPI 52

System DFT: 4 mils

New; MPI INT 9.2A-G5 (Semigloss) / Existing; RIN 9.2A-G5 (Semigloss)

Primer:	Intermediate:	Topcoat:
MPI 50	MPI 54	MPI 54

System DFT: 4 mils

2. High Performance Architectural Latex - High Traffic Areas

New; MPI INT 9.2B-G2 (Flat) / Existing; MPI RIN 9.2B-G2 (Flat)

Primer:	Intermediate:	Topcoat:
MPI 50	MPI 138	MPI 138

System DFT: 4 mils

New; MPI INT 9.2B-G3 (Eggshell) / Existing; MPI RIN 9.2B-G3 (Eggshell)

Primer:	Intermediate:	Topcoat:
MPI 50	MPI 139	MPI 139

System DFT: 4 mils

New; MPI INT 9.2B-G5 (Semigloss) / Existing; MPI RIN 9.2B-G5 (Semigloss)

Primer:	Intermediate:	Topcoat:
MPI 50	MPI 141	MPI 141

System DFT: 4 mils

3. Institutional Low Odor / Low VOC Latex

New; MPI INT 9.2M-G2 (Flat) / Existing; MPI RIN 9.2M-G2 (Flat)

Primer:	Intermediate:	Topcoat:
MPI 50	MPI 144	MPI 144

System DFT: 4 mils

New; MPI INT 9.2M-G3 (Eggshell) / Existing; MPI RIN 9.2M-G3 (Eggshell)

Primer:	Intermediate:	Topcoat:
MPI 50	MPI 145	MPI 145

System DFT: 4 mil

New; MPI INT 9.2M-G4 (Satin) / Existing; MPI RIN 9.2M-G4 (Satin)

Primer:	Intermediate:	Topcoat:
MPI 50	MPI 146	MPI 146

System DFT: 4 mils

New; MPI INT 9.2M-G5 (Semigloss) / Existing; MPI RIN 9.2M-G5 (Semigloss)

Primer:	Intermediate:	Topcoat:
MPI 50	MPI 147	MPI 147

System DFT: 4 mils

End of Section

SECTION 32 17 24.00 10

PAVEMENT MARKINGS
04/08

PART 1 GENERAL

1.1 UNIT PRICES

1.1.1 Measurement

1.1.1.1 Surface Preparation

The unit of measurement for surface preparation will be the number of square feet of pavement surface prepared for marking and accepted by the Contracting Officer.

1.1.1.2 Pavement Striping and Markings

The unit of measurement for pavement striping and markings will be the number of square feet of reflective and nonreflective striping or marking actually completed and accepted by the Contracting Officer.

1.1.1.3 Raised Pavement Markers

The unit of measurement for raised pavement markers will be the number of square feet of each specific color required. Payment will be for the total number actually placed and approved by the Contracting Officer.

1.1.1.4 Removal of Pavement Markings

The unit of measurement for removal of pavement markings shall be the number of square feet of pavement markings actually removed and accepted by the Contracting Officer.

1.1.2 Payment

The quantities of surface preparation, pavement striping or markings, raised pavement markers, and removal of pavement markings determined as specified in paragraph Measurement, will be paid for at the contract unit price. The payment will constitute full compensation for furnishing all labor, materials, tools, equipment, appliances, and doing all work involved in marking pavements. Any striping or markings which are placed without reflective media, when reflective media is required, shall be removed and replaced at no cost to the Government. Striping or markings which do not conform to the alignment and/or location required shall be removed and replaced at no cost to the Government.

1.2 REFERENCES

The publications listed below form a part of this specification to the extent referenced. The publications are referred to within the text by the basic designation only.

AMERICAN ASSOCIATION OF STATE HIGHWAY AND TRANSPORTATION OFFICIALS (AASHTO)

AASHTO M247	(2013) Standard Specification for Glass Beads Used in Pavement Markings

ASTM INTERNATIONAL (ASTM)

ASTM D4280	(2012) Extended Life Type, Nonplowable, Raised, Retroreflective Pavement Markers
ASTM D4505	(2012) Preformed Retroflective Pavement Marking Tape for Extended Service Life
ASTM D792	(2013) Density and Specific Gravity (Relative Density) of Plastics by Displacement
ASTM E28	(1999; R 2009) Softening Point of Resins Derived from Naval Stores by Ring and Ball Apparatus

U.S. GENERAL SERVICES ADMINISTRATION (GSA)

FS TT-B-1325	(Rev D; Notice 1) Beads (Glass Spheres) Retro-Reflective (Metric)
FS TT-P-1952	(Rev E) Paint, Traffic and Airfield Markings, Waterborne

1.3 SYSTEM DESCRIPTION

All machines, tools and equipment used in the performance of the work shall be approved and maintained in satisfactory operating condition. Equipment operating on roads and runways shall display low speed traffic markings and traffic warning lights.

1.3.1 Paint Application Equipment

1.3.1.1 Self-Propelled or Mobile-Drawn Pneumatic Spraying Machines

The equipment to apply paint to pavements shall be a self-propelled or mobile-drawn pneumatic spraying machine with suitable arrangements of atomizing nozzles and controls to obtain the specified results. The machine shall have a speed during application not less than 5 mph, and shall be capable of applying the stripe widths indicated, at the paint coverage rate specified in paragraph APPLICATION, and of even uniform thickness with clear-cut edges. Equipment used for marking streets and highways shall be capable of placing the prescribed number of lines at a single pass as solid lines, intermittent lines or a combination of solid and intermittent lines using a maximum of two different colors of paint as specified. The equipment used to apply the paint binder to airfield pavements shall be a self-propelled or mobile-drawn pneumatic spraying machine with an arrangement of

atomizing nozzles capable of applying a line width at any one time in multiples of 6 inches, from 6 inches to 36 inches. The paint applicator shall have paint reservoirs or tanks of sufficient capacity and suitable gauges to apply paint in accordance with requirements specified. Tanks shall be equipped with suitable air-driven mechanical agitators. The spray mechanism shall be equipped with quick-action valves conveniently located, and shall include necessary pressure regulators and gauges in full view and reach of the operator. Paint strainers shall be installed in paint supply lines to ensure freedom from residue and foreign matter that may cause malfunction of the spray guns. The paint applicator shall be readily adaptable for attachment of an air-actuated dispenser for the reflective media approved for use. Pneumatic spray guns shall be provided for hand application of paint in areas where the mobile paint applicator cannot be used.

1.3.1.2 Hand-Operated, Push-Type Machines

All machines, tools, and equipment used in performance of the work shall be approved and maintained in satisfactory operating condition. Hand-operated push-type machines of a type commonly used for application of paint to pavement surfaces will be acceptable for marking small streets and parking areas. Applicator machine shall be equipped with the necessary paint tanks and spraying nozzles, and shall be capable of applying paint uniformly at coverage specified. Sandblasting equipment shall be provided as required for cleaning surfaces to be painted. Hand-operated spray guns shall be provided for use in areas where push-type machines cannot be used.

1.3.2 Thermoplastic Application Equipment

1.3.2.1 Thermoplastic Material

Thermoplastic material shall be applied to the primed pavement surface by spray techniques or by the extrusion method, wherein one side of the shaping die is the pavement and the other three sides are contained by, or are part of, suitable equipment for heating and controlling the flow of material. By either method, the markings shall be applied with equipment that is capable of providing continuous uniformity in the dimensions of the stripe.

1.3.2.2 Application Equipment

a. Application equipment shall provide continuous mixing and agitation of the material. Conveying parts of the equipment between the main material reservoir and the extrusion shoe or spray gun shall prevent accumulation and clogging. All parts of the equipment which come into contact with the material shall be easily accessible and exposable for cleaning and maintenance. All mixing and conveying parts up to and including the extrusion shoes and spray guns shall
maintain the material at the required temperature with heat-transfer oil or electrical-element-controlled heat.

b. The application equipment shall be constructed to ensure continuous uniformity in the dimensions of the stripe. The applicator shall provide a means for cleanly cutting off stripe ends squarely and shall provide a method of applying "skiplines". The equipment shall be capable of applying varying widths of traffic markings.

c. The applicator shall be equipped with a drop-on type bead dispenser capable of uniformly dispensing reflective glass spheres at controlled rates of flow. The bead dispenser shall be automatically operated and shall begin flow prior to the flow of composition to assure that the strip is fully reflectorized.

1.3.2.3 Mobile and Maneuverable

Application equipment shall be mobile and maneuverable to the extent that straight lines can be followed and normal curves can be made in a true arc. The equipment used for the placement of thermoplastic pavement markings shall be of two general types: mobile applicator and portable applicator.

a. Mobile Application Equipment: The mobile applicator shall be defined as a truck-mounted, self-contained pavement marking machine that is capable of hot applying thermoplastic by either the extrusion or spray method. The unit shall be equipped to apply the thermoplastic marking material at temperatures exceeding 375 degrees F, at widths varying from 3 to 12 inches and in thicknesses varying from 0.020 to 0.190 inch and shall have an automatic drop-on bead system. The mobile unit shall be capable of operating continuously and of installing a minimum of 20,000 lineal feet of longitudinal markings in an 8-hour day.

(1) The mobile unit shall be equipped with a melting kettle which holds a minimum of 6000 pounds of molten thermoplastic material. The kettle shall be capable of heating the thermoplastic composition to temperatures of 375 to 425 degrees F. A thermostatically controlled heat transfer liquid shall be used. Heating of the composition by direct flame will not be allowed. Oil and material temperature gauges shall be visible at both ends of the kettle. The mobile unit shall be equipped with a minimum of two extrusion shoes located one on each side of the truck, and shall be capable of marking simultaneous edgeline and centerline stripes. Each extrusion shoe shall be a closed, oil-jacketed unit; shall hold the molten thermoplastic at a temperature of 375 to 425 degrees F; and shall be capable of extruding a line of 3 to 8 inches in width; and at a thickness of not less than 0.125 inch nor more than 0.190 inch, and of generally uniform cross section. The mobile unit shall be equipped with a spray gun system. The spray system shall consist of a minimum of four spray guns, located two on each side of the truck, and shall be capable of marking simultaneous edgeline and centerline stripes. The spray system shall be surrounded (jacketed) with heating oil to maintain the molten thermoplastic at a temperature of 375 to 425 degrees F; and shall be capable of spraying a stripe of 3 to 12 inches in width, and in thicknesses varying from 0.055 inch to 0.095 inch, and of generally uniform cross section.

(2) The mobile unit shall be equipped with an electronic programmable line pattern control system. The control system shall be capable of applying skip or solid lines in any sequence, through any and all of the extrusion shoes, or the spray guns, and in programmable cycle lengths. In addition, the mobile unit shall be equipped with an automatic counting mechanism capable of recording

the number of lineal feet of thermoplastic markings applied to the pavement surface with an accuracy of 0.5 percent.

b. Portable Application Equipment: The portable applicator shall be defined as hand-operated equipment, specifically designed for placing special markings such as crosswalks, stopbars, legends, arrows, and short lengths of lane, edge and centerlines. The portable applicator shall be capable of applying thermoplastic pavement markings by the extrusion method. The portable applicator shall be loaded with hot thermoplastic composition from the melting kettles on the mobile applicator. The portable applicator shall be equipped with all the necessary components, including a materials storage reservoir, bead dispenser, extrusion shoe, and heating accessories, so as to be capable of holding the molten thermoplastic at a temperature of 375 to 425 degrees F, of extruding a line of 3 to 12 inches in width, and in thicknesses of not less than 0.125 inch nor more than 0.190 inch and of generally uniform cross section.

1.3.3 Reflective Media Dispenser

The dispenser for applying the reflective media shall be attached to the paint dispenser and shall operate automatically and simultaneously with the applicator through the same control mechanism. The dispenser shall be capable of adjustment and designed to provide uniform flow of reflective media over the full length and width of the stripe at the rate of coverage specified in paragraph APPLICATION, at all operating speeds of the applicator to which it is attached.

1.3.4 Preformed Tape Application Equipment

Mechanical application equipment shall be used for the placement of preformed marking tape. Mechanical application equipment shall be defined as a mobile pavement marking machine specifically designed for use in applying precoated, pressure-sensitive pavement marking tape of varying widths, up to 12 inches. The applicator shall be equipped with rollers, or other suitable compactive device, to provide initial adhesion of the preformed, pressure-sensitive marking tape with the pavement surface. Additional hand-operated rollers shall be used as required to properly seat the thermoplastic tape.

1.3.5 Surface Preparation Equipment

1.3.5.1 Sandblasting Equipment

Sandblasting equipment shall include an air compressor, hoses, and nozzles of proper size and capacity as required for cleaning surfaces to be painted. The compressor shall be capable of furnishing not less than 150 cfm of air at a pressure of not less than 90 psi at each nozzle used, and shall be equipped with traps that will maintain the compressed air free of oil and water.

1.3.5.2 Waterblast Equipment

The water pressure shall be specified at 2600 psi at 140 degrees F in order to adequately clean the surfaces to be marked.

1.3.6 Marking Removal Equipment

Equipment shall be mounted on rubber tires and shall be capable of removing markings from the pavement without damaging the pavement surface or joint sealant. Waterblasting equipment shall be capable of producing an adjustable, pressurized stream of water. Sandblasting equipment shall include an air compressor, hoses, and nozzles. The compressor shall be equipped with traps to maintain the air free of oil and water.

1.3.6.1 Shotblasting Equipment

Shotblasting equipment shall be capable of producing an adjustable depth of removal of marking and pavement. Each unit shall be self-cleaning and self-contained, shall be able to confine dust and debris from the operation, and shall be capable of recycling the abrasive for reuse.

1.3.6.2 Chemical Equipment

Chemical equipment shall be capable of application and removal of chemicals from the pavement surface, and shall leave only non-toxic biodegradable residue.

1.4 SUBMITTALS

Government approval is required for submittals with a "G" designation; submittals not having a "G" designation are for Contractor Quality Control approval. When used, a designation following the "G" designation identifies the office that will review the submittal for the Government. Submit the following in accordance with Section 01 33 00 SUBMITTAL PROCEDURES:

SD-03 Product Data

Equipment;

Lists of proposed equipment, including descriptive data, and notifications of proposed Contractor actions as specified in this section. List of removal equipment shall include descriptive data indicating area of coverage per pass, pressure adjustment range, tank and flow capacities, and safety precautions required for the equipment operation.

Composition Requirements;

Manufacturer's current printed product description and Material Safety Data Sheets (MSDS) for each type paint/color proposed for use.

Qualifications;

Documentation on personnel qualifications, as specified.

SD-06 Test Reports

Sampling and Testing;

Certified copies of the test reports, prior to the use of the materials at the jobsite. Testing shall be performed in an approved independent laboratory.

SD-07 Certificates

Volatile Organic Compound (VOC) ;

Certificate stating that the proposed pavement marking paint meets the VOC regulations of the local Air Pollution Control District having jurisdiction over the geographical area in which the project is located.

1.5 QUALITY ASSURANCE

1.5.1 Qualifications;

Submit documentation certifying that pertinent personnel are qualified for equipment operation and handling of chemicals.

1.5.2 Traffic Controls

Suitable warning signs shall be placed near the beginning of the worksite and well ahead of the worksite for alerting approaching traffic from both directions. Small markers shall be placed along newly painted lines or freshly placed raised markers to control traffic and prevent damage to newly painted surfaces or displacement of raised pavement markers. Painting equipment shall be marked with large warning signs indicating slow-moving painting equipment in operation.

1.5.3 Maintenance of Traffic

1.5.3.1 Airfield

The performance of work in the controlled zones of airfields shall be coordinated with the Contracting Officer and with the Flight Operations Officer. Verbal communications shall be maintained with the control tower before and during work in the controlled zones of the airfield. The control tower shall be advised when the work is completed. A radio for this purpose shall be provided by the Contractor and approved by the Contracting Officer.

1.5.3.2 Roads, Streets, and Parking Areas

When traffic must be rerouted or controlled to accomplish the work, the necessary warning signs, flagpersons, and related equipment for the safe passage of vehicles shall be provided.

1.6 DELIVERY, STORAGE, AND HANDLING

All materials shall be delivered and stored in sealed containers that plainly show the designated name, formula or specification number, batch number, color, date of manufacture, manufacturer's name, and directions, all of which shall be plainly legible at time of use.

1.7 ENVIRONMENTAL REQUIREMENTS

Pavement surface shall be free of snow, ice, or slush. Surface temperature shall be at least 40 degrees F and rising at the beginning of operations, except those involving shot or sand blasting. Operation shall cease during thunderstorms. Operation shall cease during rainfall, except for waterblasting and removal of previously applied chemicals. Waterblasting shall cease where surface water accumulation alters the effectiveness of material removal.

PART 2 PRODUCTS

2.1 PAINT

The paint shall be homogeneous, easily stirred to smooth consistency, and shall show no hard settlement or other objectionable characteristics during a storage period of 6 months. Paints for airfields, roads, parking areas, and streets shall conform to FS TT-P-1952, color as selected. Pavement marking paints shall comply with applicable state and local laws enacted to ensure compliance with Federal Clean Air Standards. Paint materials shall conform to the restrictions of the local Air Pollution Control District.

2.2 THERMOPLASTIC COMPOUNDS

The thermoplastic reflectorized pavement marking compound shall be extruded or sprayed in a molten state onto a primed pavement surface. Following a surface application of glass beads and upon cooling to normal pavement temperatures, the marking shall be an adherent reflectorized strip of the specified thickness and width that is capable of resisting deformation by traffic.

2.2.1 Composition Requirements

Submit Manufacturer’s current printed description and Material Safety Data Sheets (MSDS) for each type paint/color proposed for use. The binder component shall be formulated as a hydrocarbon resin. The pigment, beads and filler shall be uniformly dispersed in the binder resin. The thermoplastic composition shall be free from all skins, dirt, and foreign objects and shall comply with the following requirements:

Component	Percent by Weight	
	White	Yellow
Binder	17 min.	17 min.
Titanium dioxide	10 min.	-
Glass beads	20 min.	20 min.
Calcium carbonate and Inert fillers	49 max.	*

Yellow pigments - *
*Amount and type of yellow pigment, calcium carbonate and inert fillers shall be at the option of the manufacturer, providing the other composition requirements of this specification are met.

2.2.2 Physical Properties

2.2.2.1 Color

The color shall be as indicated.

2.2.2.2 Drying Time

When installed at 70 degrees F and in thicknesses between 1/8 and 3/16 inch, after curing 15 minutes.

2.2.2.3 Softening Point

The composition shall have a softening point of not less than 194 degrees F when tested in accordance with ASTM E28.

2.2.2.4 Specific Gravity

The specific gravity of the composition shall be between 1.9 and 2.2 as determined in accordance with ASTM D792.

2.2.3 Asphalt Concrete Primer

The primer for asphalt concrete pavements shall be a thermosetting adhesive with a solids content of pigment reinforced synthetic rubber and synthetic plastic resin dissolved and/or dispersed in a volatile organic compound (VOC). Solids content shall not be less than 10 percent by weight at 70 degrees F and 60 percent relative humidity. A wet film thickness of 0.005 inch plus or minus 0.001 inch, shall dry to a tack-free condition in less than 5 minutes.

2.2.4 Portland Cement Concrete Primer

The primer for Portland cement concrete pavements shall be an epoxy resin primer. The primer shall be of the type recommended by the manufacturer of the thermoplastic composition. Epoxy primers recommended by the manufacturer shall be approved by the Contracting Officer prior to use. Requests for approval shall be accompanied with technical data, instructions for use, and a 1 quart sample of the primer material.

2.3 PREFORMED TAPE

The preformed tape shall be an adherent reflectorized strip in accordance with ASTM D4505 Type I or IV, Class optional.

2.4 RAISED REFLECTIVE MARKERS

Either metallic or nonmetallic markers of the button or prismatic reflector type may be used. Markers shall be of permanent colors, as specified for pavement marking, and shall retain the color and brightness under the action of traffic. Button markers shall have a diameter of not less than 4 inches, and shall be spaced not more than 40 feet apart on solid longitudinal lines.

Broken centerline marker spacings shall be in segments of standard approved with gaps of standards approved between segments. Markers shall have rounded surfaces presenting a smooth contour to traffic and shall not project more than 3/4 inch above level of pavement. Pavement markers and adhesive epoxy shall conform to ASTM D4280.

2.5 REFLECTIVE MEDIA

Reflective media for airfields shall conform to FS TT-B-1325, Type I, Gradation A. Reflective media for roads and streets shall conform to FS TT-B-1325, Type I, Gradation A or AASHTO M247, Type I.

2.6 SAMPLING AND TESTING

Materials proposed for use shall be stored on the project site in sealed and labeled containers, or segregated at source of supply, sufficiently in advance of needs to allow 60 days for testing. Upon notification by the Contractor that the material is at the site or source of supply, a sample shall be taken by random selection from sealed containers in the presence of the Contracting Officer. Samples shall be clearly identified by designated name, specification number, batch number, manufacturer's formulation number, project contract number, intended use, and quantity involved. If materials are approved based on reports furnished by the Contractor, samples will be retained by the Government for possible future testing should the material appear defective during or after application.

PART 3 EXECUTION

3.1 SURFACE PREPARATION

Thoroughly clean surfaces to be marked before application of the pavement marking material. Dust, dirt, and other granular surface deposits shall be removed by sweeping, blowing with compressed air, rinsing with water or a combination of these methods as required. Rubber deposits, surface laitance, existing paint markings, and other coatings adhering to the pavement shall be completely removed with scrapers, wire brushes, sandblasting, approved chemicals, or mechanical abrasion as directed. Areas of old pavement affected with oil or grease shall be scrubbed with several applications of trisodium phosphate solution or other approved detergent or degreaser, and rinsed thoroughly after each application. After cleaning, oil-soaked areas shall be sealed with cut shellac to prevent bleeding through the new paint. Pavement surfaces shall be allowed to dry, when water is used for cleaning, prior to striping or marking. Surfaces shall be recleaned, when work has been stopped due to rain.

3.1.1 Pretreatment for Early Painting

Where early painting is required on rigid pavements, apply a pretreatment with an aqueous solution, containing 3 percent phosphoric acid and 2 percent zinc chloride, to prepared pavement areas prior to painting.

3.1.2 Cleaning Existing Pavement Markings

In general, markings shall not be placed over existing pavement marking patterns. Remove existing pavement markings, which are in good condition but interfere or conflict with the newly applied marking patterns. Deteriorated or obscured markings that are not misleading or confusing or interfere with the adhesion of the new marking material do not require removal. New preformed and thermoplastic pavement markings shall not be applied over existing preformed or thermoplastic markings. Whenever grinding, scraping, sandblasting or other operations are performed the work must be conducted in such a manner that the finished pavement surface is not damaged or left in a pattern that is misleading or confusing. When these operations are completed the pavement surface shall be blown off with compressed air to remove residue and debris resulting from the cleaning work.

3.1.3 Cleaning Concrete Curing Compounds

On new portland cement concrete pavements, cleaning operations shall not begin until a minimum of 30 days after the placement of concrete. All new concrete pavements shall be cleaned by either sandblasting or water blasting. When water blasting is performed, thermoplastic and preformed markings shall be applied no sooner than 24 hours after the blasting has been completed. The extent of the blasting work shall be to clean and prepare the concrete surface as follows:

a. There is no visible evidence of curing compound on the peaks of the textured concrete surface.
b. There are no heavy puddled deposits of curing compound in the valleys of the textured concrete surface.
c. All remaining curing compound is intact; all loose and flaking material is removed.
d. The peaks of the textured pavement surface are rounded in profile and free of sharp edges and irregularities.
e. The surface to be marked is dry.

3.2 APPLICATION

All pavement markings and patterns shall be placed as shown on the plans.

3.2.1 Paint

Paint shall be applied to clean, dry surfaces, and only when air and pavement temperatures are above 40 degrees F and less than 95 degrees F. Paint temperature shall be maintained within these same limits. New asphalt pavement surfaces and new Portland concrete cement shall be allowed to cure for a period of not less than 30 days before applications of paint. Paint shall be applied pneumatically with approved equipment at rate of coverage specified . Provide guide lines and templates as necessary to control paint

application. Special precautions shall be taken in marking numbers, letters, and symbols. Edges of markings shall be sharply outlined.

3.2.1.1 Rate of Application

a. Reflective Markings: Pigmented binder shall be applied evenly to the pavement area to be coated at a rate of 105 plus or minus 5 square feet/gallon. Glass spheres shall be applied uniformly to the wet paint on airfield pavement at a rate of 8 and on road and street pavement at a rate of 6 plus or minus 0.5 pounds of glass spheres per gallon of paint.

b. Nonreflective Markings: Paint shall be applied evenly to the pavement surface to be coated at a rate of 105 plus or minus 5 square feet/gallon.

3.2.1.2 Drying

The maximum drying time requirements of the paint specifications will be strictly enforced to prevent undue softening of bitumen, and pickup, displacement, or discoloration by tires of traffic. If there is a delay in drying of the markings, painting operations shall be discontinued until cause of the slow drying is determined and corrected.

3.2.2 Thermoplastic Compounds

Thermoplastic pavement markings shall be placed upon dry pavement; surface dry only will not be considered an acceptable condition. At the time of installation, the pavement surface temperature shall be a minimum of 40 degrees F and rising. Thermoplastics, as placed, shall be free from dirt or tint.

3.2.2.1 Longitudinal Markings

All centerline, skipline, edgeline, and other longitudinal type markings shall be applied with a mobile applicator. All special markings, crosswalks, stop bars, legends, arrows, and similar patterns shall be placed with a portable applicator, using the extrusion method.

3.2.2.2 Primer

After surface preparation has been completed the asphalt and/or concrete pavement surface shall be primed. The primer shall be applied with spray equipment. Primer materials shall be allowed to "set-up" prior to applying the thermoplastic composition. The asphalt concrete primer shall be allowed to dry to a tack-free condition, usually occurring in less than 10 minutes. The Portland cement concrete primer shall be allowed to dry in accordance with the thermoplastic manufacturer's recommendations. To shorten the curing time of the epoxy resins an infrared heating device may be used on the concrete primer.

a. Asphalt Concrete Primer: Primer shall be applied to all asphalt concrete pavements at a wet film thickness of 0.005 inch, plus or minus 0.001 inch (265-400 square feet/gallon).

b. Portland Cement Concrete Primer: Primer shall be applied to all concrete pavements (including concrete bridge decks) at a wet film thickness of between 0.04 to 0.05 inch (320-400 square feet/gallon).

3.2.2.3 Markings

After the primer has "set-up", the thermoplastic shall be applied at temperatures no lower than 375 degrees F nor higher than 425 degrees F at the point of deposition. Immediately after installation of the marking, drop-on glass spheres shall be mechanically applied so that the spheres are held by and imbedded in the surface of the molten material.

a. Extruded Markings: All extruded thermoplastic markings shall be applied at the specified width and at a thickness of not less than 0.125 inch nor more than 0.190 inch.

b. Sprayed Markings: All sprayed thermoplastic markings shall be applied at the specified width and the thicknesses designated in the contract plans. If the plans do not specify a thickness, centerline markings shall be applied at a wet thickness of 0.090 inch, plus or minus 0.005 inch, and edgeline markings at a wet thickness of 0.060 inch plus or minus 0.005 inch.

c. Reflective Glass Spheres: Immediately following application, reflective glass spheres shall be dropped onto the molten thermoplastic marking at the rate of 1 pound/20 square feet of compound.

3.2.3 Preformed Tape

The pavement surface temperature shall be a minimum of 60 degrees F and the ambient temperature shall be a minimum of 60 degrees F and rising. The preformed markings shall be placed in accordance with the manufacturer's written instructions.

3.2.4 Raised Reflective Markers

Prefabricated markers shall be aligned carefully at the required spacing and permanently fixed in place by means of epoxy resin adhesives. To insure good bond, pavement in areas where markers will be set shall be thoroughly cleaned by sandblasting and use of compressed air prior to applying adhesive.

3.2.5 Reflective Media

Application of reflective media shall immediately follow application of pigmented binder. Drop-on application of glass spheres shall be accomplished to insure that reflective media is evenly distributed at the specified rate of coverage. Should there be malfunction of either paint applicator or reflective media dispenser, operations shall be discontinued immediately until deficiency is corrected.

3.3 MARKING REMOVAL

Pavement marking, including plastic tape, shall be removed in the areas shown on the drawings. Removal of marking shall be as complete as possible

without damage to the surface. Aggregate shall not be exposed by the removal process. After the markings are removed, the cleaned pavement surfaces shall exhibit adequate texture for remarking as specified in paragraph SURFACE PREPARATION. Demonstrate removal of pavement marking in an area designated by the Contracting Officer. The demonstration area will become the standard for the remainder of the work.

3.3.1 Equipment Operation

Equipment shall be controlled and operated to remove markings from the pavement surface, prevent dilution or removal of binder from underlying pavement, and prevent emission of blue smoke from asphalt or tar surfaces.

3.3.2 Cleanup and Waste Disposal

The worksite shall be kept clean of debris and waste from the removal operations. Cleanup shall immediately follow removal operations in areas subject to air traffic. Debris shall be disposed of at approved sites.

-- End of Section --

Solicitation No.
N40192-15-R-2900

PAINTING
INDEFINITE DELIVERY/INDEFINITE QUANTITY (IDIQ)

VARIOUS LOCATIONS, GUAM

PART VI
ATTACHMENTS

ORDER FOR SUPPLIES OR SERVICES

PAGE 1 OF

1. CONTRACT/PURCH ORDER/AGREEMENT NO.	2. DELIVERY ORDER/CALL NO.	3. DATE OF ORDER/CALL (YYYYMMMDD)	4. REQUISITION/PURCH REQUEST NO.	5. PRIORITY

6. ISSUED BY	CODE	7. ADMINISTERED BY (If other than 6)	CODE	8. DELIVERY FOB
				☐ DESTINATION ☐ OTHER (See Schedule if other)

9. CONTRACTOR	CODE	FACILITY	10. DELIVER TO FOB POINT BY (Date) (YYYYMMMDD)	11. X IF BUSINESS IS
NAME AND ADDRESS			12. DISCOUNT TERMS	☐ SMALL ☐ SMALL DISAD-VANTAGED ☐ WOMEN-OWNED
			13. MAIL INVOICES TO THE ADDRESS IN BLOCK	

14. SHIP TO	CODE	15. PAYMENT WILL BE MADE BY	CODE	MARK ALL PACKAGES AND PAPERS WITH IDENTIFICATION NUMBERS IN BLOCKS 1 AND 2.

16. TYPE OF ORDER			
	DELIVERY/CALL	☐	This delivery order/call is issued on another Government agency or in accordance with and subject to terms and conditions of above numbered contract.
	PURCHASE	☐	Reference your furnish the following on terms specified herein. **ACCEPTANCE.** THE CONTRACTOR HEREBY ACCEPTS THE OFFER REPRESENTED BY THE NUMBERED PURCHASE ORDER AS IT MAY PREVIOUSLY HAVE BEEN OR IS NOW MODIFIED, SUBJECT TO ALL OF THE TERMS AND CONDITIONS SET FORTH, AND AGREES TO PERFORM THE SAME.

NAME OF CONTRACTOR	SIGNATURE	TYPED NAME AND TITLE	DATE SIGNED (YYYYMMMDD)

☐ If this box is marked, supplier must sign Acceptance and return the following number of copies:

17. ACCOUNTING AND APPROPRIATION DATA/LOCAL USE

18. ITEM NO.	19. SCHEDULE OF SUPPLIES/SERVICES	20. QUANTITY ORDERED/ ACCEPTED*	21. UNIT	22. UNIT PRICE	23. AMOUNT
					$0.00 $0.00 $0.00

*If quantity accepted by the Government is same as quantity ordered, indicate by X. If different, enter actual quantity accepted below quantity ordered and encircle.	24. UNITED STATES OF AMERICA BY: CONTRACTING/ORDERING OFFICER	25. TOTAL	$0.00
		26. DIFFERENCES	

27a. QUANTITY IN COLUMN 20 HAS BEEN

☐ INSPECTED ☐ RECEIVED ☐ ACCEPTED, AND CONFORMS TO THE CONTRACT EXCEPT AS NOTED:

b. SIGNATURE OF AUTHORIZED GOVERNMENT REPRESENTATIVE	c. DATE (YYYYMMMDD)	d. PRINTED NAME AND TITLE OF AUTHORIZED GOVERNMENT REPRESENTATIVE

e. MAILING ADDRESS OF AUTHORIZED GOVERNMENT REPRESENTATIVE	28. SHIP. NO.	29. D.O. VOUCHER NO.	30. INITIALS
	☐ PARTIAL ☐ FINAL	32. PAID BY	33. AMOUNT VERIFIED CORRECT FOR
f. TELEPHONE NUMBER / g. E-MAIL ADDRESS	31. PAYMENT		34. CHECK NUMBER
36. I CERTIFY THIS ACCOUNT IS CORRECT AND PROPER FOR PAYMENT.	☐ COMPLETE		
a. DATE (YYYYMMMDD) / b. SIGNATURE AND TITLE OF CERTIFYING OFFICER	☐ PARTIAL ☐ FINAL		35. BILL OF LADING NO.

37. RECEIVED AT	38. RECEIVED BY (Print)	39. DATE RECEIVED (YYYYMMMDD)	40. TOTAL CON-TAINERS	41. S/R ACCOUNT NUMBER	42. S/R VOUCHER NO.

AMENDMENT OF SOLICITATION/MODIFICATION OF CONTRACT

1. CONTRACT ID CODE	PAGE OF PAGES

2. AMENDMENT/MODIFICAITON NO.	3. EFFECTIVE DATE	4. REQUISITION/PURCHASE REQ. NO.	5. PROJECT NO. *(If applicble)*

6. ISSUED BY CODE	7. ADMINISTERED BY *(If other than Item 6)* CODE

8. NAME AND ADDRESS OF CONTRACTOR *(No., street, county, State and ZIP Code)*	(X)	9A. AMENDMENT OF SOLICIATION NO.
	☐	9B. DATED *(SEE ITEM 11)*
	☐	10A. MODIFICATION OF CONTRACT/ORDER NO.
		10B. DATED *(SEE ITEM 13)*
CODE / FACILITY CODE		

11. THIS ITEM ONLY APPLIES TO AMENDMENTS OF SOLICITATIONS

☐ The above numbered solicitation is amended as set forth in Item 14. The hour and date specified for receipt of Offers ☐ is extended, ☐ is not extended.

Offers must acknowledge receipt of this amendment prior to the hour and date specified in the solicitation or as amended, by one of the following methods: (a)By completing items 8 and 15, and returning _____ copies of the amendment; (b) By acknowledging receipt of this amendment on each copy of the offer submitted; or (c) By separate letter or telegram which includes a reference to the solicitation and amendment numbers. FAILURE OF YOUR ACKNOWLEDGMENT TO BE RECEIVED AT THE PLACE DESIGNATED FOR THE RECEIPT OF OFFERS PRIOR TO THE HOUR AND DATE SPECIFIED MAY RESULT IN REJECTION OF YOUR OFFER. If by virtue of this amendment your desire to change an offer already submitted, such change may be made by telegram or letter, provided each telegram or letter makes reference to the solicitation and this amendment, and is received prior to the opening hour and date specified.

12. ACCOUNTING AND APPROPIRATION DATA *(If required)*

13. THIS ITEM ONLY APPLIES TO MODIFICATION OF CONTRACTS/ORDERS. IT MODIFIES THE CONTRACT/ORDER NO. AS DESCRIBED IN ITEM 14.

CHECK ONE	
☐	A. THIS CHANGE ORDER IS ISSUED PURSUANT TO: *(Specify authority)* THE CHANGES SET FORTH IN ITEM 14 ARE MADE IN THE CONTRACT ORDER NO. IN ITEM 10A.
☐	B. THE ABOVE NUMBERED CONTRACT/ORDER IS MODIFIED TO REFLECT THE ADMINISTRATIVE CHANGES *(such as changes in paying office, appropriation date, etc.*) SET FORTH IN ITEM 14, PURSUANT TO THE AUTHORITY OF FAR 43.103(b).
☐	C. THIS SUPPLEMENTAL AGREEMENT IS ENTERED INTO PURSUANT TO AUTHORITY OF:
☐	D. OTHER *(Specify type of modification and authority)*

E. IMPORTANT: Contractor ☐ is not, ☐ is required to sign this document and return _____ copies to the issuing office.

14. DESCRIPTION OF AMENDMENT/MODIFICATION (*Organized by UCF section headings, including solicitation/contract subject matter where feasible.)*

Except as provided herein, all terms and conditions of the document referenced in Item 9A or 10A, as heretofore changed, remains unchanged and in full force and effect.

15A. NAME AND TITLE OF SIGNER *(Type or print)*		16A. NAME AND TITLE OF CONTRACTING OFFICER *(Type or print)*	
15B. CONTRACTOR/OFFEROR *(Signature of person authorized to sign)*	15C. DATE SIGNED	16B. UNITED STATES OF AMERICA *(Signature of Contracting Officer)*	16C. DATE SIGNED

QC Manager Duties

- The QC Manager shall have no job-related responsibilities other than QC unless specifically permitted in the particular project's specification.
- He shall be on the site at all times during progress of the work, with complete authority to take any action necessary to ensure conformance with the contract requirements. In the event of his absence, the approved alternate shall be on the site. ***NOTE: See Section 01 45 00.05 20 for further guidance***
- Authority to immediately stop any segments of work, which does not comply with the contract plans and specifications, and directs the removal and replacement of any defective work.
- Will conduct daily inspection of work performed for compliance with plans and specifications.
- Must certify daily that all materials and equipment delivered/installed in the work comply with contract plans and specifications. Certify daily that all work performed on the construction site and off the construction site conforms to plans and specifications. Report any deficiencies and remedial action planned and taken.
- Supervise and coordinate the inspection and tests made by the members of the Quality Control Organization, including subcontractors.
- Assure QC staff is adequate to meet its responsibilities.
- Maintain a copy of the ROICC approved QC Plan on file at the job site, complete with up-to-date approved revisions/filled-in log of submittals. Maintain at the job site an up-to-date QC Submittal Register (provided in the specification) showing the status of all submittals required by the contract.
- Maintain at the job site a testing plan showing status of all tests required by the contracts. Ensure that all tests required are performed and results are reported. Indicate whether test results show the item tested conforms to contract requirements or not.
- Authority to remove any individual from the site who fails to perform their work in a skillful, safe and workmanlike manner or whose work does not comply with the contract plans and specifications.
- QC manager does not have authority to deviate from plans and specifications without prior approval, in writing, from the ROICC.
- Ensure that the Contractor's Quality Control Organization is adequately staffed with qualified personnel to perform all the detailed inspections and testing specified in the plans and specifications.
- Maintain at the job site the up-to-date QC Rework Items List.

Items in Letters of Authority to QC Manager and Alternate.

The appointing letter to the QC Manager and the Alternate shall detail their authority and responsibility to act for the Contractor. It should also outline duties, responsibilities, and authority without any job-related responsibilities other than QC.

The QC Manager or approved Alternate must be on the site at all times during progress, with complete authority to take any action necessary to insure conformance with the contract requirements.

The QC Manager's Letter of Appointment will specifically address the following items:

- Authority to immediately stop any segment of work which does not comply with the contract plans and specifications, and direct the removal and replacement of any defective work.
- Conduct daily inspection of work performed each day for compliance with plans and specifications.
- Certify daily that all materials and equipment delivered/installed in the work comply with contract plans and specifications. Certify daily that all work performed on the construction site and off the construction site conforms to plans and specifications. Report any deficiencies and remedial action planned and taken.
- Supervise and coordinate the inspection and tests made by the members of the Quality Control Organization including subcontractors.
- Assure QC staff is adequate to meet its responsibilities.
- Insure that all tests required are performed and the results reported. Indicate whether test results show the item tested conforms to contract requirements or not. Ensure corrective work achieves acceptable test results.
- Maintain at the job site a testing plan showing status of all tests required by the contracts.
- Authority to remove any individual from the site who fails to perform work in a skillful, safe and workmanlike manner or whose work does not comply with the contract plans and specifications.
- QC Manager has no authority to deviate from plans and specifications without prior approval, in writing, from the Contracting Officer or designated representative.
- Ensure that the Contractor's Quality Control Organization is adequately staffed with qualified personnel to perform all the detailed inspections and testing specified in the plans and specifications.
- Maintain a copy of the approved QC Plan on file at the job site complete with up-to-date approved revisions/filled-in log of submittals.
- Maintain at the job site an up-to-date QC Submittal Status Log showing status of all submittals required by the contract.

- Maintain at the job site an up-to-date Noncompliance Check-off List (Log of deficiencies) on all nonconforming work.
- Assure that As-Built Drawings are kept current by showing all deviations made from the contract drawings on a daily basis.

Sample Letter

1 April 1999

Tom Stone

1000 State Street

San Diego, CA

SUBJECT: QC Manager, Appointment as

RE: Contract N62474-83-C-0000, Maintenance Hanger, NAS

Dear Sir:

You are hereby appointed as the Contractor Quality Control Manager (QC Manager) for Pacific Construction Co., Inc. during the term of this contract.

You are directed to follow the inspection procedures, instructions, and reports in strict compliance with the contract drawings and specifications and any authorized changes thereto. As a direct representative of the company, you are authorized and directed to perform the following duties:

1. Approve all Shop Drawings and submittals for conformance to the contract requirements. You are to keep a status log and Testing Plan up to date and record copies of your approved submittals are to be forwarded to the NAVY Contract Administrator Submittals that require Government approval are to be forwarded to the designated party for appropriate action after your certification.

2. Inspect the work performed on a continual basis for compliance with current drawings and specifications. You have the authority to issue a stop work order on any item or work feature pending satisfactory correction of any deficiency in that work, particularly if the defective work is to be enclosed, is to support further construction, or will be inaccessible if further work proceeds. You have the authority to direct removal and replacement of any defective work.

3. Perform, supervise, or coordinate as required the reviews, inspections, and tests to be made by other members of your Quality Control Organization.

4. Inspect and certify that all material and equipment delivered to the job site complies with the approved submittals.

5. Ensure that all required test and/or inspections are performed, and report the results in the daily Contractor Quality Control Report.

6. File Certified Contractor Quality Control Reports, on the forms provided, with the NAVY Contract Administrator. These reports are to cover prime and subcontractor personnel and equipment on the site, idle

equipment and personnel, material deliveries, weather conditions, work accomplished, inspections, and tests conducted, results of inspections and tests, deficiencies found, and corrective action taken.

7. Maintain as-builts. At the job site, two sets of full-size contract drawings shall be marked to show any deviations that have been made from the contract drawings.

8. Recommend to Mr/Ms (indicate Name & Title) removal of any individual from the project who consistently fails to perform work properly.

9. Report to me any subcontractor who consistently does not conform to the contract drawings and specifications.

10. Keep a copy of the approved QC Plan, with up-to-date approved revisions, on file at the job site.

Very truly yours,

CONSTRUCTION CO., INC.

President

SAMPLE

Table 1. Contents of the QC Plan

Item	Description & Remarks	01450	SF-01450
Table of Contents	The Table of Contents should include Tabs for each required item in the Plan.	Required	Required
QC Organization Chart	The quality control organization depicted in chart form, showing the relationship of the quality control organization to other elements of the Prime Contractor's company as well as subs, suppliers, and other outside organizations.	Required	Not Required
Names & Qualifications	The qualifications for the QC Manager and staff are required. The acceptance of these personnel must be based on the stated qualifications and past experience in comparison to the requirements indicated in the specifications. A list of the proposed requirements must be provided to the EFD CQM Staff for approval prior to advertisement of the contract.	Required	Required
Duties and Responsibilities	Area of responsibility and authority of each individual in the quality control organization, outlined in detail. Some duties and responsibilities may overlap and require clarification as work progresses. NAVFAC policy does not preclude the Prime Contractor from using subcontractor personnel as part of the quality control staff. However, the Prime Contractor should understand that the QC organization acts on behalf of the prime and that the prime is be held responsible for their actions.	Required	Required
Outside Organizations	Outside organizations include design agents, consultants, and subcontractors that will perform work or services for the prime under this contract. The list should also indicate the general scope of the work or services to be performed.	Required	Optional
Appointment Letter(s)	A copy of the letter appointing the QC Manager, signed by an officer of the firm, outlining the QC Manager's duties, responsibilities, and authority. This letter must include the authority to direct removal and replacement of any defective work. This letter provides the authority for the QC Manager to act as an agent of the Contractor. No QC plan can be accepted unless these requirements are satisfactorily addressed in the appointing letter. A sample of the appointing letter is provided in Appendix A.	Required	Optional
Submittal Procedures	Procedures for reviewing all shop drawings, samples, certificates, or other submittals for contract compliance, including the name of the person(s) authorized to sign the submittals for the Contractor as complying with the contract. Procedures for processing submittals and responsibility for approving each submittal must be included in the plan. A sample of the Contractor's proposed approval stamp(s) should be included for verification against the contract requirements. The Contractor shall also include a submittal status log listing all submittals required by the specifications and stating the action required by the Contractor and the Government. The Contractor shall complete columns (a) through (e) of this log and name the persons authorized to review the submittals.	Required	Required
Testing Lab Information	A listing of testing laboratories that will be employed by the Contractor and a description of the services these firms will provide, including statements of their accreditation as required by the contract. If there is any question regarding the capability of a particular testing organization, refer to Appendix B, Approval of Material Testing Laboratories for Construction Contracts.	Required	Optional
Testing Plan and Log	This plan includes the tests required, referenced by the specification paragraph number requiring the test, the frequency, and the person responsible for each test.	Required	Required
Rework Procedure	These include the Contractor's internal procedures to identify, document, track, and sign off completion of deficiencies in the construction.	Required	Required

Item	Description & Remarks	01450	SF-01450
Documentation Procedures	The procedures for documenting quality control operation, inspection, and testing must be addressed and a copy of all forms and reports to be used included. The Contractor's reporting requirement includes preparation of daily reports.	Required	Required
List of Definable Features of Work	The listing of Definable Features of Work is the fundamental breakdown of the project into distinct tasks. Special care should be taken to review this list and ensure that the activities not only meet the minimum requirements contained in the specifications, but are practicable for use throughout the project.	Required	Required
Performing The Three Phases of Control	The Preparatory and Initial Phase Checklists provided in Appendices G. and H. will be completed for each DFOW..	Required	Required
Personnel Matrix	Where required, this matrix assigns responsibility by name for documentation of the three phases of control and testing activities, as well as review and approval of submittals. This matrix should assign these responsibilities by Specification Section.	Optional	Optional
Completion Inspection Procedures	The Completion Inspection Procedures outline the turnover process including assignment of responsibility for various phases of turnover. The Punch-Out Inspection is to be completed by the Contractor QC Manager. The Pre-Final Inspection is done by the Government with the QC Manager. The Contracting Officer, based on the completion of the pre-final schedules, conducts the Final Inspection. The Contractor's QC Manager, the Contracting Officer or designated representative and the client representative should be present.	Required	Required

CONTRACTOR QUALITY CONTROL REPORT

(ATTACH ADDITIONAL SHEETS IF NECESSARY)

DATE

REPORT NO

PHASE | CONTRACT NO | CONTRACT TITLE

PREPARATORY

WAS PREPARATORY PHASE WORK PREFORMED TODAY? YES ☐ NO ☐

IF YES, FILL OUT AND ATTACH SUPPLEMENTAL PREPARATORY PHASE CHECKLIST.

Schedule Activity No.	Definable Feature of Work	Index #

INITIAL

WAS INITIAL PHASE WORK PREFORMED TODAY? YES ☐ NO ☐

IF YES, FILL OUT AND ATTACH SUPPLEMENTAL INITIAL PHASE CHECKLIST.

Schedule Activity No.	Definable Feature of Work	Index #

FOLLOW-UP

WORK COMPLIES WITH CONTRACT AS APPROVED DURING INITIAL PHASE? YES ☐ NO ☐

WORK COMPLIES WITH SAFETY REQUIREMENTS? YES ☐ NO ☐

Schedule Activity No.	Description of Work, Testing Performed & By Whom, Definable Feature of Work, Specification Section, Location and List of Personnel Present

REWORK ITEMS IDENTIFIED TODAY (NOT CORRECTED BY CLOSE OF BUSINESS)

Schedule Activity No.	Description

REWORK ITEMS CORRECTED TODAY (FROM REWORK ITEMS LIST)

Schedule Activity No.	Description

REMARKS (Also Explain Any Follow-Up Phase Checklist Item From Above That Was Answered "NO"), Manuf. Rep On-Site, etc.

Schedule Activity No.	Description

On behalf of the contractor, I certify that this report is complete and correct and equipment and material used and work performed during this reporting period is in compliance with the contract drawings and specifications to the best of my knowledge except as noted in this report.

AUTHORIZED QC MANAGER AT SITE DATE

GOVERNMENT QUALITY ASSURANCE REPORT

DATE

QUALITY ASSURANCE REPRESENTATIVE'S REMARKS AND/OR EXCEPTIONS TO THE REPORT

GOVERNMENT QUALITY ASSURANCE MANAGER DATE

4296/2 (9/98) SHEET OF

CONTRACTOR QUALITY CONTROL REPORT

(CONTINUATION SHEET)

(ATTACH ADDITIONAL SHEETS IF NECESSARY)

DATE

REPORT NO.

PHASE	CONTRACT NO	CONTRACT TITLE

FOLLOW-UP

WORK COMPLIES WITH CONTRACT AS APPROVED DURING INITIAL PHASE? YES ☐ NO ☐

WORK COMPLIES WITH SAFETY REQUIREMENTS? YES ☐ NO ☐

Schedule Activity No.	Description of Work, Testing Performed & By Whom, Definable Feature of Work, Specification Section, Location and List of Personnel Present

REMARKS (Also Explain Any Checklist Item From Above That Was Answered "NO"), Manuf. Rep. On-Site, etc.

Schedule Activity No.	Description

2496/2A (9/98) SHEET OF

Table 2. Sample Approval Checklist

Item Description	Items to be checked	✓
General Items	• As-built drawing statement. The required full-size set of marked up contract drawings to be maintained on-site, updated monthly and submitted to AOIC after completion of construction.	
Table of Contents	• TOC is included • Page numbers are indicated • Revision sheet is included to indicate any changes made to the plan during the course of construction.	
QC Organization Chart	• Relationship of QC Manager to officer of firm to whom he reports. • Relationship of QC Manager to other members of QC staff. • Relationship of QC Manager to subcontractor QC Managers or foremen. • Relationship of QC Manager to consultants, testing firms, etc. • Relationship of QC Manager to Prime Contractor's superintendent	
Names & Qualifications	• Names and qualifications of personnel in the QC organization. Multi-page resumes are not desired. Qualifications of an individual should be confined to one or two pages and should relate to person's function in the QC organization. Pertinent information would include education and training, construction experience, quality control experience and management experience.	
Duties and Responsibilities	• The area of responsibility and authority of each individual in the QC organization is clearly stated.	
Outside Organizations	• A list of outside organizations such as testing laboratories, architects, and consulting engineers that will be employed and a description of the services they will provide.	
Appointment Letter(s)	• Letter appointing the QC Manager	
Submittal Procedures	• Submittal Review Procedure including names of persons authorized to sign submittals for the Contractor. • Submittal Status Log. • Specification matrix indicating who the authorized submittal reviewer, inspector, and testing lab personnel (both on-site and factory) will be for each technical specification section.	
Testing Lab Information	The Contractor must provide the following information for each independent testing laboratory for Government approval: 1. Functional description of lab's organizational structure. 2. List and resume of testing lab personnel. 3. Affidavit of compliance with applicable ASTM publications and certification that all lab work will be performed in accordance with contract technical specifications. 4. List of inspection equipment corresponding to each test noted in the testing log and equipment calibration certificate. 5. Certification from a nationally recognized agency. 6. Affidavits for special inspections must be submitted to the Contracting Officer before progress payments for the work are approved.	
Testing Plan and Log	• Testing plan includes all formal tests and the specification reference • Responsible parties identified for each test	
Rework Procedures	• Non-compliance check-off list (Log of Deficiencies Form)	

Documentation Procedures	• Specific statement in the QC reports indicating that a Professional Engineer inspected any designs and/or certifications for formwork, falsework, or erection procedures, if applicable. • QC/DRI Daily Report Form.	
List of Definable Features of Work	As a minimum, this will include each section of the specification cross referenced to the production schedule. For projects requiring a progress chart (Bar or Gantt Chart), the list of DFOW shall include but not be limited to all items of work on the schedule. For projects requiring a network analysis, the list of DFOW shall include but not be limited to all critical path activities.	
Preparatory and Initial Phase Checklists	• Dependent on the editing of Specification Section 01450; include a copy of the forms provided in Section 01450 or copies of the forms with the heading partially filled in (Spec Section, Contract Number, DFOW title and Schedule Activity Number) for each DFOW. • No initial development of the checklists is required, beyond inclusion of the sample checklists contained in Appendices G. and H.	
Personnel Matrix	Personnel assignment for each specification section on who is responsible for: • Review and approval of submittals • Perform and document the 3 Phases of Control • Perform and document the testing • Performing punch-out, pre-final, and final inspections	
Completion Inspection Procedures	Identify process and the responsible party(s) for documenting completion inspections for: • Punch-Out Inspections • Pre-Final Inspections • Final Acceptance Inspection	

Instructional Notes for Daily Production Report Form

Reports are required for each day that work is performed and shall accompany the submission of the Contractor QC Report prepared for the same day. This requirement shall commence at the beginning of the construction phase of work and continue through final completion of the Contract. Account for each calendar day throughout the life of the Contract. The reporting of work shall be identified by terminology consistent with the construction schedule. Contractor Production Reports are to be prepared, signed and dated by the Project Superintendent and shall contain the following information:

a. Date of report, report number, name of Contractor, Contract number, title and location of Contract and Superintendent present.
b. Weather conditions in the morning and in the afternoon including maximum and minimum temperatures.
c. Identify work performed by corresponding Schedule Activity No., PC#, Modification No., etc.
d. A list of Contractor and subcontractor personnel on the work site, their trades, employer, work location, description of work performed, hours worked by trade, daily total work hours on work site this date (incl. hours on continuation sheets), and total work hours from start of construction.
e. A list of job safety actions taken and safety inspections conducted. Indicate that safety requirements have been met including the results on the following:
    1) Was a job safety meeting held this date? (If YES, attach a copy of the meeting minutes.)
    2) Were there any lost time accidents this date? (If YES, attach a copy of the completed OSHA report.)
    3) Was crane/man lift/trenching/scaffold/high voltage electrical/high work/hazmat work done? (If YES, attach a statement or checklist showing inspection performed.)
    4) Was hazardous material/waste released into the environment? (If YES, attach a description of incident and proposed action.)
f. Identify Schedule Activity No. related to safety action and list safety actions taken today and safety inspections conducted.
g. Identify Schedule Activity No., Submittal # and list equipment/material received each day that is incorporated into the job.
h. Identify Schedule Activity No., Owner and list construction and plant equipment on the work site including the number of hours used.
i. Include a "remarks" section in this report which will contain pertinent information including directions received, problems encountered during construction, work progress and delays, conflicts or errors in the Contract documents, field changes, safety hazards encountered, instructions given and corrective actions taken, delays encountered and a record of visitors to the work site. For each remark given, identify the Schedule Activity No. that is associated with the remark.

Contractor Production Report (Continuation Sheet)

Additional space required to contain daily information on the Contractor Production Report will be placed on its Continuation Sheet(s). An unlimited number of Continuation Sheets may be added as necessary and attached to the Production Report.

CONTRACTOR PRODUCTION REPORT

(ATTACH ADDITIONAL SHEETS IF NECESSARY)

CONTRACT NO	TITLE AND LOCATION	DATE
		REPORT NO
CONTRACTOR	SUPERINTENDENT	
AM WEATHER	PM WEATHER	MAX TEMP (F) / MIN TEMP (F)

WORK PERFORMED TODAY

Schedule Activity No.	DEFINABLE FEATURE OF WORK, WORK LOCATION AND DESCRIPTION	EMPLOYER	NUMBER	TRADE	HRS

JOB SAFETY

WAS A JOB SAFETY MEETING HELD THIS DATE? (If YES attach copy of the meeting minutes)	☐ YES	☐ NO	TOTAL WORK HOURS ON JOB SITE, THIS DATE, INCL CON'T SHEETS
WERE THERE ANY LOST TIME ACCIDENTS THIS DATE? (If YES attach copy of completed OSHA report)	☐ YES	☐ NO	CUMULATIVE TOTAL OF WORK HOURS FROM PREVIOUS REPORT
WAS CRANE/MANLIFT/TRENCHING/SCAFFOLD/HV ELEC/HIGH WORK/ HAZMAT WORK DONE? (If YES attach statement or checklist showing inspection performed.)	☐ YES	☐ NO	
WAS HAZARDOUS MATERIAL/WASTE RELEASED INTO THE ENVIRONMENT? (If YES attach description of incident and proposed action.)	☐ YES	☐ NO	TOTAL WORK HOURS FROM START OF CONSTRUCTION

Schedule Activity No.	DEFINABLE FEATURE OF WORK AND LIST SAFETY ACTIONS TAKEN TODAY/SAFETY INSPECTIONS CONDUCTED ☐ SAFETY REQUIREMENTS HAVE BEEN MET.

EQUIPMENT/MATERIAL RECEIVED TODAY TO BE INCORPORATED IN JOB (INDICATE SCHEDULE ACTIVITY NUMBER)

Schedule Activity No.	Submittal #	Definable Feature of Work and Description of Equipment/Material Received

CONSTRUCTION AND PLANT EQUIPMENT ON JOB SITE TODAY. INDICATE HOURS USED AND SCHEDULE ACTIVITY NUMBER.

Schedule Activity No.	Owner	Definable Feature of Work and Description of Construction Equipment Used Today (incl Make and Model)	Hours Used

Schedule Activity No.	DEFINABLE FEATURE OF WORK AND REMARKS

CONTRACTOR/SUPERINTENDENT DATE

CONTRACTOR PRODUCTION REPORT

(CONTINUATION SHEET)

CONTRACT NO	TITLE AND LOCATION	DATE
		REPORT NO

WORK PERFORMED TODAY

Schedule Activity No.	DEFINABLE FEATURE OF WORK, WORK LOCATION AND DESCRIPTION	EMPLOYER	NUMBER	TRADE	HRS

Schedule Activity No.	DEFINABLE FEATURE OF WORK AND LIST SAFETY ACTIONS TAKEN TODAY/SAFETY INSPECTIONS CONDUCTED

EQUIPMENT/MATERIAL RECEIVED TODAY TO BE INCORPORATED IN JOB (INDICATE SCHEDULE ACTIVITY NUMBER)

Schedule Activity No.	Submittal #	Definable Feature of Work and Description of Equipment/Material Received

CONSTRUCTION AND PLANT EQUIPMENT ON JOB SITE TODAY. INDICATE HOURS USED AND SCHEDULE ACTIVITY NUMBER.

Schedule Activity No.	Owner	Definable Feature of Work and Description of Construction Equipment Used Today (incl Make and Model)	Hours Used

Schedule Activity No.	DEFINABLE FEATURE OF WORK AND REMARKS

INCLUDE ALL PERSONNEL WORK HOURS IN THE WORK PERFORMED SECTION ON THIS SHEET
INTO THE FRONT CONTRACTOR PRODUCTION REPORT

Instructional Notes for Preparatory Phase Checklist

Each DFOW that is in the Preparatory Phase shall have this checklist filled out for it. The checklist shall be identified by terminology consistent with the construction schedule. This checklist shall accompany the submission of to the Contractor QC Report of the same date.

a. Specification Section, date of report, and contract number shall be filled out. Duplicate this information in the header of the second page of the report.
b. Definable Feature of Work, Schedule Activity No. and Index # entry and format will match entry in the Preparatory Phase section of the Contractor QC Report
c. Personnel Present: Indicate the number of hours of advance notice that was given to the Government Representative and indicate (Yes/No checkboxes) whether or not the Government Rep was notified. Indicate the Names of Preparatory Phase Meeting attendees, their position and company/government they are with.
d. Submittals: Indicate if submittals have been approved (Yes/No checkboxes), if no indicate what has not been submitted. Are materials on hand (Yes/No checkboxes) and if not, what items are missing. Check delivered material/equipment against approved submittals and comment as required.
e. Material Storage: Indicate if materials/equipment is stored properly (Yes/No checkboxes) and if not, what action is/was taken.
f. Specifications: Review and comment on Specification Paragraphs that describe the material/equipment, procedure for accomplishing the work and clarify any differences.
g. Preliminary Work & Permits: Ensure preliminary work is in accordance with the Contract documents and necessary permits are on file, if not, describe the action taken.
h. Testing: Identify who performs tests, the frequency, and where tests are to occur. Review the testing plan, report abnormalities, and if the test facilities have been approved.
i. Safety: Indicate if the activity hazard analysis has been approved (Yes/No checkboxes) and comment on the review of the applicable portions of the EM 385-1-1.
j. Meeting Comments: Note comments and remarks during the Preparatory Phase Meeting that was not addressed in previous sections of this checklist.
k. Other Items or Remarks: Note any other remarks or items that were a result of the Preparatory Phase.
l. QC Manager will sign and date the checklist.

PREPARATORY PHASE CHECKLIST

(CONTINUED ON SECOND PAGE)

CONTRACT NO	DEFINABLE FEATURE OF WORK	SPEC SECTION	DATE
		SCHEDULE ACT NO.	INDEX #

PERSONNEL PRESENT

GOVERNMENT REP NOTIFIED _____ HOURS IN ADVANCE: YES ☐ NO ☐

NAME	POSITION	COMPANY/GOVERNMENT

SUBMITTALS

REVIEW SUBMITTALS AND/OR SUBMITTAL REGISTER. HAVE ALL SUBMITTALS BEEN APPROVED? YES ☐ NO ☐

IF NO, WHAT ITEMS HAVE NOT BEEN SUBMITTED? _____

ARE ALL MATERIALS ON HAND? YES ☐ NO ☐

IF NO, WHAT ITEMS ARE MISSING? _____

CHECK APPROVED SUBMITTALS AGAINST DELIVERED MATERIAL. (THIS SHOULD BE DONE AS MATERIAL ARRIVES.)

COMMENTS: _____

MATERIAL STORAGE

ARE MATERIALS STORED PROPERLY? YES ☐ NO ☐

IF NO, WHAT ACTION IS TAKEN? _____

SPECIFICATIONS

REVIEW EACH PARAGRAPH OF SPECIFICATIONS. _____

DISCUSS PROCEDURE FOR ACCOMPLISHING THE WORK. _____

CLARIFY ANY DIFFERENCES. _____

PRELIMINARY WORK & PERMITS

ENSURE PRELIMINARY WORK IS CORRECT AND PERMITS ARE ON FILE.

IF NOT, WHAT ACTION IS TAKEN? _____

PREPARATORY PHASE CHECKLIST

(CONTINUED FROM FIRST PAGE)

CONTRACT NO	DEFINABLE FEATURE OF WORK	SPEC SECTION	DATE
		SCHEDULE ACT NO.	INDEX #

TESTING

IDENTIFY TEST TO BE PERFORMED, FREQUENCY, AND BY WHOM.

WHEN REQUIRED?

WHERE REQUIRED?

REVIEW TESTING PLAN.

HAS TEST FACILITIES BEEN APPROVED?

SAFETY

ACTIVITY HAZARD ANALYSIS APPROVED? YES ☐ NO ☐

REVIEW APPLICABLE PORTION OF EM 385-1-1.

MEETING COMMENTS

NAVY PWD/ROICC COMMENTS DURING MEETING.

OTHER ITEMS OR REMARKS

OTHER ITEMS OR REMARKS:

QC MANAGER DATE

Instructional Notes for Initial Phase Checklist

Each DFOW that is in the Initial Phase shall have this checklist filled out for it. The checklist shall be identified by terminology consistent with the construction schedule. This checklist shall accompany the submission of the Contractor Quality Control Report of the same date.

a. Specification Section, date of report, and contract number shall be entered.
b. Definable Feature of Work, Schedule Activity No. and Index # entry and format will match entry in the Initial Phase section of the Contractor QC Report.
c. Personnel Present: Indicate the number of hours of advance notice that was given to the Government Representative and indicate (Yes/No checkboxes) whether or not the Government Rep was notified. Indicate the Names of Initial Phase Meeting attendees, their position and company/government they are with.
d. Procedure Compliance: Comment on compliance with procedures identified at Preparatory Phase of Control and assurance that work is in accordance with contract documents.
e. Preliminary Work: Ensure preliminary work being placed is in compliance and if not, what action is/was taken.
f. Workmanship: Identify where initial work is located; if a sample panel is required (Yes/No checkboxes); is the initial work the sample (Yes/No checkboxes); and if Yes, describe the panel location and precautions taken to preserve the sample.
g. Resolution: Comment on any differences and the resolutions reached.
h. Check Safety: Comment on the safety review of the job conditions.
i. Other: Note any other remarks or items that were a result of the Initial Phase.
j. QC Manager will sign and date the checklist.

INITIAL PHASE CHECKLIST

		SPEC SECTION	DATE
CONTRACT NO	DEFINABLE FEATURE OF WORK	SCHEDULE ACT NO.	INDEX #

PERSONNEL PRESENT

GOVERNMENT REP NOTIFIED _____ HOURS IN ADVANCE: YES ☐ NO ☐

NAME	POSITION	COMPANY/GOVERNMENT

PROCEDURE COMPLIANCE

IDENTIFIY FULL COMPLIANCE WITH PROCEDURES IDENTIFIED AT PREPARATORY. COORDINATE PLANS, SPECIFICATIONS, AND SUBMITTALS.

COMMENTS:

PRELIMINARY WORK

ENSURE PRELIMINARY WORK IS COMPLETE AND CORRECT. IF NOT, WHAT ACTION IS TAKEN?

WORKMANSHIP

ESTABLISH LEVEL OF WORKMANSHIP.

WHERE IS WORK LOCATED?

IS SAMPLE PANEL REQUIRED? YES ☐ NO ☐

WILL THE INIITAL WORK BE CONSIDERED AS A SAMPLE? YES ☐ NO ☐

(IF YES, MAINTAIN IN PRESENT CONDITION AS LONG AS POSSIBLE AND DESCRIBE LOCATION OF SAMPLE)

RESOLUTION

RESOLVE ANY DIFFERENCES.

COMMENTS:

CHECK SAFETY

REVIEW JOB CONDITIONS USING EM 385-1-1 AND JOB HAZARD ANALYSIS

COMMENTS:

OTHER

OTHER ITEMS OR REMARKS

QC MANAGER DATE

Instructional Notes for Testing Plan and Log

As tests are performed, the QC Manager shall record on the "Testing Plan and Log" the date the test was conducted, the date the test results were forwarded to the Contracting Officer, remarks and acknowledgement that an accredited or Contracting Officer approved testing laboratory was used. Attach a copy of the updated "Testing Plan and Log" to the last daily Contractor QC Report of each month.

TESTING PLAN AND LOG

CONTRACT NUMBER			CONTRACT TITLE AND LOCATION							CONTRACTOR	
SPECIFICATION SECTION AND PARAGRAPH A NUMBER	SCHEDULE CTIVITY ID	TEST REQUIRED	ACCREDITED/ APPROVED LO LAB		SAMPLED BY	TESTED BY	CATION OF TEST		DATE COMPLETED	DATE FORWARDED TO CONTR. OFF.	REMARKS
			YES	NO			ON SITE	OF F SITE			

Instructional Notes for Rework Item List

The QC Manager shall maintain a list of work that does not comply with the Contract, identifying what items need to be reworked, the date the item was originally discovered, the date the item will be corrected by, and the date the item was corrected. There is no requirement to report a rework item that is corrected the same day it is discovered. Attach a copy of the "Rework Items List" to the last daily Contractor QC Report of each month. The Contractor shall be responsible for including on this list items needing rework including those identified by the Contracting Officer.

REWORK ITEMS LIST

Contract No. and Title:

Contractor:

NUMBER	DATE IDENTIFIED	DEFINABLE FEATURE OF WORK AND DESCRIPTION	CONTRACT REQUIREMENT (Spec. Section and Par. No., Drawing No. and Detail No., etc.)	ACTION TAKEN BY QC MANAGER	RESOLUTION	DATE COMPLETED

CONSTRUCTION CONTRACT NON-COMPLIANCE NOTICE (CCN) NAVFAC 4330/36

A. DESCRIPTION/PURPOSE

This form is used to notify construction Contractors of deficiencies and to record corrective action taken. It is drafted by QA personnel, signed by the appropriate Government representatives and delivered to the appropriate representative of the Construction Contractor who signs to acknowledge receipt of it.

B. PREPARATION INSTRUCTION

Contractor/Responsible Individual: Enter Construction Contractor's company name.
Contract Number and Title: Enter the number of the construction Contract, the title of the Contract."
Notice Number: Number notices sequentially by construction contract.
Date: Enter date of notice using Navy dating system; e.g., 11 Dec 2004
Spec Paragraph and/or Drawing Number: Enter appropriate reference to construction contract documents.
Reference: Enter applicable reference, if any, to shop drawings, certifications, QC Reports.
Contractor Reply by Date: Enter a date that the PWD/ROICC expects a reply from the Contractor.
Deficiency in Workmanship and/or Material: Enter brief narrative description of item not in compliance. Be specific.
Corrective Action Accomplished: Completed by Construction Contractor indicating corrective action to correct deficiency noted.
QA Representative: Signed by QA Representative.
CM: Signed by the Designated Government Representative for the particular construction Contract.
Contractor's Acknowledgement: Signed by the responsible individual.

C. GENERAL INSTRUCTIONS.

When the QA Rep notes a construction deficiency, the form should be completed listing only one deficiency on each notice. The QA Rep fills out the form, then sign and date the notice. The QA Rep then obtains the signature of the appropriate Government representative. After the Government representative signs the form, the QA Rep presents it to the QC Manager. The QC Manager should acknowledge receipt of the notice by signing.

After the Construction Contractor’s Representative signs the form, that person is given the original. When the item has been corrected, the Contractor should return the original with the corrective actions noted to the QA Rep. The form should be accepted only after the QA Rep is satisfied that the item is properly corrected.

If appropriate, the QA Rep shall take a photograph of the deficiency and attach a copy to the CCN.

E. CONTRACTOR REPLY DATE

Due with the daily QC Report for the day the deficiency was noted.

F. DISTRIBUTION

The original is given to the Contractor’s QC Manager or Superintendent so the corrective action can be recorded. When the original is received back from the Contractor indicating that corrective action has been taken the original is filed with the appropriate QC Report.

The QA Rep retains a copy with their files. It is used to follow up correction. At the close of each contract the QA Rep shall transfer all uncorrected deficiencies still remaining to the final inspection punch list. Payment deductions or appropriate retention of progress payments should be taken until all corrective actions are acceptable to the QA Rep.

CONSTRUCTION CONTRACT NON-COMPLIANCE NOTICE
NAVFAC 4330/36 (Rev. 3/03)

CONTRACTOR/RESPONSIBLE INDIVIDUAL	NOTICE NUMBER
CONTRACT NUMBER AND TITLE	DATE
SPECIFICATION PARAGRAPH AND/OR DRAWING NUMBER	CONTRACTOR REPLY BY DATE
REFERENCE (Shop Drawing, Certification, CQC Report Number, etc.)	

DEFICIENCY IN WORKMANSHIP AND/OR MATERIAL

CORRECTIVE ACTION ACCOMPLISHED (This block filled in by Contractor)

QA REPRESENTATIVE

NAME: TITLE:

DATE NOTED: SIGNATURE: _____

CM

NAME: TITLE:

DATE ISSUED: SIGNATURE: _____

CONTRACTOR'S ACKNOWLEDGMENT

NAME: TITLE:

DATE RCV'D: SIGNATURE: _____

This Notice does NOT authorize any work not included in the Contract and shall not constitute a basis for additional payment or time. If you are in disagreement with this Notice, notify the Contracting Officer immediately in writing.

DISTRIBUTION
Original - QC Manager or Superintendent (Original)
Copies to - Contractor's Home Office, QA Representative, Contract File

☐ Initial Report
☐ Follow-up Report
☐ Final Report

Contractor Significant Incident Report (CSIR)

1. General Information

Contracting Activity/ROICC Office:

Accident Classification:

☐ Injury ☐ Fatality ☐ Environment ☐ Procedural Issues ☐ Lessons Learned
☐ Illness ☐ Property Damage ☐ Other_____

Involving:

☐ Confined Space ☐ Equip/Mrt Ver/Mat Handling (Heavy Construction Equip.) ☐ Hazardous Material
☐ Crane and Rigging ☐ Equip/Mrt Ver/Mat Handling (Material Handling) ☐ Trenching/Excavation
☐ Diving ☐ Equip/Mrt Ver/Mat Handling (Man-Lift/Elevated Platform) ☐ Waterfront/Marine
☐ Demolition/Renovation ☐ Fall from Ladder ☐ Fall from Scaffold ☐ Other_____
☐ Electrical ☐ Fall from Roof ☐ Fire

2. Personal Information

Name (Last. First. MI):	**Age:**	**Sex:**

Job Title/Description:	**Employed By:**
Supervisor Name (Last, First, MI) & Title:	**Was the person trained to perform this activity/task?** ☐ **Yes** ☐ **No**
What type of training was received (OJT, classroom, etc)?	**Date of the most recent formal training and topics discussed?**

3. Witness Information

Witness #1: Name (Last, First, MI):	**Job Title/Description:**
Employed By:	**Supervisor Name (Last, First, MI):**
Witness #2: Name (Last, First, MI):	**Job Title/Description:**
Employed By:	**Supervisor Name (Last, First, MI):**

Additional Witnesses: ☐ **Yes** ☐ **No**
(List any additional witnesses on a separate sheet and attach.)

4. Contract Information

Type of Contract:

A/E BOS CLEAN Construction Design Build FSCC FSSC

JOC RAC Service Other_____

Contract Number & Title:	**Industrial Group & Industrial Type:**
Prime Contractor Name/Address/Phone & Fax No:	**Sub Contractor Name/Address/Phone & FAX No:**
Safety Manager (Last, First, MI):	**Safety Manager (Last, First, MI):**
Insurance Carrier:	**Insurance Carrier:**

5. Accident Description

Date of Accident:	**Time of Accident:**	**Exact Location of Accident:**

Describe the accident in detail in your words: ***(Use the back of page if you need additional space)***

Direct Cause(s) of Accident:

Indirect Cause(s) of Accident:

Action(s) taken to prevent re-occurrence or provide on-going corrective actions:

Corrective Action Beginning Date:	**Anticipated Completion Date:**

Personal Protective Equipment:

☐ Available and used ☐ Available and not used ☐ Not Required

☐ Not related to Mishap ☐ Wrong PPE for job

List PPE Used:

Type of Construction Equipment (Make, Model, Serial #, VIN#) Involved:

Was Hazardous Material Spilled/Released? ☐ **Yes** ☐ **No**

Please List Hazardous Material(s) Involved:

Who provided first aid or cleanup of mishap site?

Any blood-borne pathogen exposure, other than EMTs? ☐ **Yes** ☐ **No**

Who?

List OSHA and WM-385-1-1 standards that were violated:

Was site secured and witness statements taken immediately? ☐ **Yes** ☐ **No**

By Whom?

6. Injury Illness/Fatality Information

Severity of Injury/Illness:

- ☐ Fatality
- ☐ Lost Workday Case Involving Days Away From Work
- ☐ Temporary Disabillity
- ☐ Recordable Workday Case Involving Restricted Duty
- ☐ Permanent Total Disability
- ☐ Other Recordable Case
- ☐ Recordable First Aid Case
- ☐ Permanent Partial Disability
- ☐ Non-Recordable Case
- ☐ No Injury

Estimated Days Lost:	**Estimated Days Hospitalized:**	**Estimated Days Restricted Duty:**

List Primary Body Part Affected:	**List Other Body Part(s) Affected:**

Nature of Injury/Illness for Primary Body Part (Examples: Amputation, Burn, Hernia):

Type of Accident (Examples: Fall same level, Lifting, Bitten, Exerted):

Source of Accident (Examples: Crane, Carbon Monoxide, Ladder, Welding Equipment):

7. Casual Factors *(Explain answers on supplementary sheet)*

• **Design – Design of facility, workplace, or equipment was a factor?**	☐ **Yes**	☐ **No**
• **Inspection/Maintenance – Inspection & Maintenance procedures were a factor?**	☐ **Yes**	☐ **No**
• **Persons Physical Condition – In your opinion, the physical condition of the person was a factor?**	☐ **Yes**	☐ **No**
• **Operation Procedures – Operating procedures were a factor?**	☐ **Yes**	☐ **No**
• **Job Practices – One or more job safety/health practices not being followed when the accident occurred contributed to the accident?**	☐ **Yes**	☐ **No**
• **Human Factors – One or more human factors, such as a person's size or strength contributed to the accident?**	☐ **Yes**	☐ **No**
• **Environmental Factors – Heat, cold, dust, sun, glare, etc., contributed to the accident?**	☐ **Yes**	☐ **No**
• **Chemical and Physical Agent Factors – Exposure to chemical agents, such as dust, fumes, mist, vapors, or physical agents such as noise, radiation, etc., contributed to the accident?**	☐ **Yes**	☐ **No**
• **Office Factors – Office setting such as lifting office furniture, carrying, stooping, contributed to the accident?**	☐ **Yes**	☐ **No**
• **Support Factors – Inappropriate tools/resources were provided to perform the task?**	☐ **Yes**	☐ **No**
• **PPE – Improper selection, use or maintenance of PPE contributed to the accident?**	☐ **Yes**	☐ **No**
• **Drugs/Alcohol – In your opinion, were drugs or alcohol a factor?**	☐ **Yes**	☐ **No**
• **Job Hazard Analysis – The lack of an adequate (IAW-EM-385-1-1 Sec 01.A) activity hazard analysis was a contributing factor.**	☐ **Yes**	☐ **No**
• **Job Hazard Analysis – JHA was not site specific and/or did not address the type of work/operations performed when the mishap occurred.**	☐ **Yes**	☐ **No**
• **Management – A lack of adequate supervision contributed to the accident.**	☐ **Yes**	☐ **No**
• **Management – Inadequate information was provided at pre con meeting.**	☐ **Yes**	☐ **No**

8. OSHA Information			
Date OSHA was Notified:	**Date(s) of Investigation:**	**Date of citation:** ***(Attach Copy)***	**Dollar amount of Penalties:**

9. Report Preparer	
Name (Last, First, MI):	**Date of Report:**
Title: **Employer:** **Phone #:**	**Signature:**

CONTRACTOR SIGNIFICANT INCIDENT REPORT (CSIR) INSTRUCTIONS

Complete Sections Appropriate to Incident (Rev. 06/02).

NOTE: THE ATTACHED CSIR FORM IS TO BE USED BY CONTRACTORS TO RECORD THE RESULTS OF THEIR ACCIDENT/INCIDENTS INVESTIGATIONS AND SHALL BE PROVIDED TO THE CONTRACTING OFFICER WITHIN THE REQUIRED TIMEFRAMES.

GENERAL. Complete a separate report for each person who was injured in the accident. A report needs to be completed for all OSHA recordable accidents, property damage in excess of $2000.00 (This amount is for record purposes only. GOV is not required to enter property damage reports into FAIR database if it is less than $10,000.00.), WHE accidents, or near miss/high visibility mishaps. Please type or print legibly. Appropriate items shall be marked with an "X" in box(es), non-applicable sections shall be marked "N/A". If additional space is needed, provide the information on a separate sheet of paper and attach to the completed form.

Mark the report:
INITIAL – If this form is being used as initial notification of a Fatality or High Visibility Mishap. The initial form is due within 4 hours of a serious accident. A form marked 'Follow-up' or 'Final' is required within 5 days.
FOLLOW-UP – If you are providing additional information on a report previously submitted.
FINAL – If you are providing a completed report and expect no changes.

SECTION 1 – GENERAL INFORMATION

CONTRACTING ACTIVITY/ROICC OFFICE - Enter the name and address of the Contracting Office administering the contract under which the mishap took place (e.g. ROICC MCBH, ROICC NORFOLK, PWC GUAM, etc.).

ACCIDENT CLASSIFICATION - INJURY/ILLNESS/FATALITY/PROPERTY DAMAGE/-PROCEDURAL ISSUES/-ENVIRONMENTAL/LESSONS LEARNED/OTHER – Mark the appropriate block(s) if the incident resulted in any of these conditions.

INVOLVING - If the mishap involved any of the conditions listed under "Involving" mark the appropriate box(es). Specific questions associated with each of these conditions are available from the Contracting Officer to assist you in your investigation. When these questions are used they shall be attached as part of this report.

SECTION 2 - PERSONAL INFORMATION

NAME - Enter last name, first name, middle initial of person involved.
AGE - Enter age.
SEX - Enter M for Male and F for Female.
JOB TITLE/DESCRIPTION - Enter the job title/description assigned to the injured person (e.g. carpenter, laborer, surveyor, etc.).
EMPLOYED BY - Enter employment company name of the person involved.
SUPERVISOR'S NAME & TITLE - Enter name and title of the immediate supervisor.
WAS PERSON TRAINED TO PERFORM ACTIVITY/TASK? - For the purpose of this section "trained" means the person has been provided the necessary information (either formal and/or on-the-job (OJT) training) to competently perform the activity/task in a safe and healthful manner.
TYPE OF TRAINING - Indicate the specific type of training (classroom or on-the-job) that the injured person received before the accident happened.
DATE OF MOST RECENT FORMAL TRAINING/TOPICS DISCUSSED - Enter the month, day, and year of the last *formal* training completed that covered the activity/task being performed at the time of the accident. List topics that were discussed at the training identified above.

SECTION 3 - WITNESS INFORMATION

The following applies to Witness #1 and Witness #2:
WITNESS NAME - Enter last name, first name, middle initial of the witness.
JOB DESCRIPTION/TITLE - Enter the job title/description assigned to the witness (e.g. carpenter, laborer, surveyor, etc.).
EMPLOYED BY - Enter the name of the employment company of the witness.
SUPERVISORS NAME - Enter name of immediate supervisor of the witness.
ADDITIONAL WITNESSES - Provide same information, as above, for each witnesses. Use additional pages if necessary.

SECTION 4 - CONTRACTOR INFORMATION

TYPE OF CONTRACT - Mark appropriate box. A/E means architect/engineer. If "OTHER" is marked, specify type of contract on line provided.
CONTRACT NUMBER/TITLE - Enter complete contract number and tile of prime contract (e.g. N62477-85-C-0100, 184 Pearl City Hsg. Revitalization).
CONSTRUCTION INDUSTRIAL GROUP AND INDUSTRIAL TYPE – This is the type of construction that will be done at this project.

1. First, you must choose the Industrial Group. You have 4 choices to choose from: (**NOTE**! Review of the Industrial Types below and knowing what the projects scope of work is will assist you in deciding what the Industrial Group should be.)
   a. Buildings
   b. Heavy Industrial
   c. Infrastructure
   d. Light Industrial
2. Once you have chosen the Industrial Group, you now select the Industrial Type. You have multiple choices under each Group, chose the one you feel fits the project most closely because on most projects there won't be an exact match:
   a. Buildings:
      (1) Communications Ctr.
      (2) Dormitory/Hotel
      (3) High-rise Office
      (4) Hospital
      (5) Housing
      (6) Laboratory
      (7) Low-rise Office
      (8) Maintenance Facility
      (9) Parking Garage
      (10) Physical Fitness Ctr.
      (11) Restaurant/Nightclub
      (12) School
      (13) Warehouse
   b. Heavy Industrial:
      (1) Chemical Mfg.
      (2) Electrical (Generating)
      (3) Environmental
      (4) Metals Refining/Processing
      (5) Mining
      (6) Natural Gas Processing
      (7) Oil Exploration/Production
      (8) Oil Refining
      (9) Pulp and Paper
   c. Infrastructure:
      (1) Airport
      (2) Electrical Distribution
      (3) Flood Control
      (4) Highway
      (5) Marine Facilities
      (6) Navigation
      (7) Rail
      (8) Tunneling
      (9) Water/Wastewater
   d. Light Industrial:
      (1) Automotive Assembly/Mfg.
      (2) Consumer Products Mfg.
      (3) Foods
      (4) Microelectronics Mfg.
      (5) Office Products Mfg.
      (6) Pharmaceuticals Mfg.

CONTRACTOR'S NAME/ADDRESS/PHONE NUMBER
(1) PRIME - Enter the exact name (title of firm), address, phone and fax numbers of the prime contractor.
(2) SUBCONTRACTOR - Enter the exact name, address, phone and fax numbers of any subcontractor involved in the accident.

SAFETY MANAGER'S NAME
(1) PRIME - Enter the name of the prime contractor safety manager.
(2) SUBCONTRACTOR - Enter the name of the subcontractors safety manager.

INSURANCE CARRIER
(1) PRIME - Enter the exact name/title of the prime's insurance company. Policy number not required.
(2) SUBCONTRACTOR - Enter the exact name of the subcontractor's insurance company. Policy number not required.

SECTION 5 - ACCIDENT DESCRIPTION

DATE OF ACCIDENT - Enter the month, day, and year of accident.
TIME OF ACCIDENT - Enter the local time of accident in military time. Example: 14:30 hrs (not 2:30 p.m.).
EXACT LOCATION OF ACCIDENT - Enter facts needed to locate the accident scene (installation/project name, building/room number, street, direction and distance from closest landmark, etc.).
DESCRIBE THE ACCIDENT IN DETAIL. Fully describe the accident in the space provided. If property damage involved, give estimated dollar amount of damage and/or repair costs involved. If additional space is needed continue on a separate sheet and attach to this report. Give the sequence of events that describe what happened leading up to and including the accident. Fully identify personnel and equipment involved and their role(s) in the accident. Ensure that relationships between personnel and

equipment are clearly specified. Ensure questions below regarding direct cause(s), indirect cause(s), and actions taken are answered. **NOTE!** Review questions in Section 7 below before completing.
DIRECT CAUSE(S) - The direct cause is that single factor which most directly lead to the accident. See examples below.
INDIRECT CAUSE(S) - Indirect cause are those factors, which contributed to, but did not directly initiate the occurrence of the accident.

Examples for Direct and Indirect Cause:
1. Employee was dismantling scaffold and fell 12 feet from unguarded opening.
Direct cause: Failure to provide fall protection at elevation
Indirect causes: Failure to enforce safety requirements: improper training/motivation of employee (possibility that employee was not knowledgeable of fall protection requirements or was lax in his attitude toward safety); failure to ensure provision of positive fall protection whenever elevated; failure to address fall protection during scaffold dismantling in phase hazard analysis.

2. Private citizen had stopped his vehicle at intersection for red light when vehicle was struck in rear by contractor vehicle. (note contractor vehicles was in proper safe working condition.)
Direct cause: Failure of contractor driver to maintain control of and stop contractor vehicle within safe distance.
Indirect cause: Failure of employee to pay attention to driving (defensive driving).

ACTION(S) TAKEN TO PREVENT RE-OCCURRENCE OR PROVIDE ON-GOING CORRECTIVE ACTIONS. Fully describe all the actions taken, anticipated, and recommended to eliminate the cause(s) and prevent reoccurrence of similar accidents/illnesses. Continue on back or additional sheets of paper if necessary to fully explain and attach to the complete report form.
CORRECTIVE ACTION DATES -
(1) Beginning - Enter the date when the corrective action(s) identified above will begin.
(2) Anticipated Completion - Enter the date when the corrective action(s) identified above will be completed.
PERSONAL PROTECTIVE EQUIPMENT (PPE) - Mark appropriate box(es) and list PPE which was being used by the injured person at the time of the accident (e.g. protective clothing, shoes, glasses, goggles, respirator, safety belt, harness, etc.)
TYPE OF CONTRACTOR EQUIPMENT - Enter the Serial Number, Model Number and specific type of equipment involved in the mishap (e.g. dump truck (off highway), crane (rubber tire), pump truck (concrete), etc.).
WAS HAZARDOUS MATERIAL SPILLED/RELEASED? - Mark appropriate block and list name(s) of any reportable quantities of hazardous materials spilled/released during the mishap.
WHO PROVIDED FIRST AID OR CLEAN-UP OF MISHAP SITE? - List name(s) of individual(s) and employer, if known.
ANY BLOOD-BORNE PATHOGEN EXPOSURE, OTHER THAN EMT? - Mark appropriate block and list name(s) of individual(s) and employer, if known.
LIST OSHA AND/OR EM 385-1-1 STANDARDS THAT WERE VIOLATED. - Self explanatory.
WAS SITE SECURED AND WITNESS STATEMENT TAKEN IMMEDIATELY? - Mark appropriate block and list by whom.

SECTION 6 - INJURY/ILLNESS/FATALITY INFORMATION

SERVERITY OF INJURY/ILLNESS – Mark appropriate box.
ESTIMATED DAYS LOST - Enter the estimated number of workdays the person will lose from work. Update when final data is known.
ESTIMATED DAYS HOSPITALIZED - Enter the estimated number of workdays the person will be hospitalized. Update when final data is known.
ESTIMATED DAYS RESTRICTED DUTY - Enter the estimated number of workdays the person, as a result of the accident, will not be able to perform all of their regular duties. Update when final data is known.
BODY PART(S) AFFECTED - Enter the most appropriate primary and when applicable, secondary, etc. body part(s) affected (e.g. arm: wrist: abdomen: single eye; jaw : both elbows: second finger: great toe: collar bone: kidney, etc.).
NATURE OF INJURY/ILLNESS FOR PRIMARY BODY PART - Enter the most appropriate nature of injury/illness (e.g. amputation, back strain, dislocation, laceration, strain, asbestosis, food poisoning, heart conditions, etc.).
TYPE AND SOURCE OF INJURY/ILLNESS - Type and Source Codes are used to describe what caused the incident.
(1) TYPE Code stands for an "Action" (Example: Worker, installing conduit, lost his balance and fell five feet from a ladder. Type Code: Fell different levels".) Select the most appropriate Type of injury from the list below:

TYPE OF INJURY/ILLNESS

STRUCK BY/AGAINST	CONTACTED CONTACTED WITH (INJURED PERSON MOVING) CONTACTED BY (OBJECT WAS MOVING)
FELL, SLIPPED, TRIPPED SAME LEVEL/DIFFERENT LEVEL/NO FALL	EXERTED LIFTED, STRAINED BY (SINGLE ACTION) STRESSED BY (REPEATED ACTION)
CAUGHT ON/IN/BETWEEN	EXPOSED INHALED/INGESTED/ABSORBED/EXPOSED TO
PUNCTURED, LACERATED PUNCTURED BY/CUT BY/STUNG BY/BITTEN BY	TRAVELING IN

(2) SOURCE Code stands for an "object or substance." (Example: Worker, installing conduit, lost his balance and fell five feet from a ladder. Source Code: "Ladder".) Select the most appropriate Source of injury from the list below:

SOURCE OF INJURY/ILLNESS

BUILDING OR WORKING AREA WALKING/WORKING AREA STAIRS/STEPS LADDER FURNITURE BOILER/PRESSURE VESSEL EQUIPMENT LAYOUT WINDOWS/DOORS ELECTRICITY	DUST, VAPOR, ETC. DUST (SILICA, COAT, ETC.) FIBERS ASBESTOS GASES CARBON MONOXIDE MIST, STEAM, VAPOR, FUME WELDING FUMES PARTICLES (UNIDENTIFIED)
ENVIRONMENT CONDITION TEMPERATURE EXTREME (INDOOR) WEATHER (ICE, RAIN, HEAT, ETC.) FIRE, FLAME, SMOTE (NOT TABACCO) NOISE RADIATION LIGHT VENTILATION TOBACCO SMOKE STRESS (EMOTIONAL) CONFINED SPACE	CHEMICAL, PLASTIC, ETC. DRY CHEMICAL - CORROSIVE DRY CHEMICAL - TOXIC DRY CHEMICAL - EXPLOSIVE DRY CHEMICAL - FLAMMABLE LIQUID CHEMICAL - CORROSIVE LIQUID CHEMICAL - TOXIC LIQUID CHEMICAL - EXPLOSIVE LIQUID CHEMICAL - FLAMMABLE PLASTIC WATER MEDICINE
MACHINE OR TOOL HAND TOOL (POWERED: SAW, GRINDER, ETC.) HAND TOOL (NON POWERED) MECHANCIAL POWER TRANSMISSION APPARATUS GUARD, SHIELD (FIXED, MOVEABLE, INTERLOCK) VIDEO DISPLAY TERMINAL PUMP, COMPRESSOR, AIR PRESSURE TOOL HEATING EQUIPMENT WELDING EQUIPMENT	INANIMATE OBJECT BOX, BARREL, ETC. PAPER METAL ITEM, MINERAL NEEDLE GLASS SCRAP, TRASH, WOOD FOOD CLOTHING, APPAREL, SHOES
MACHINE OR TOOL HAND TOOL (POWERED: SAW, GRINDER, ETC.) HAND TOOL (NON POWERED) MECHANCIAL POWER TRANSMISSION APPARATUS GUARD, SHIELD (FIXED, MOVEABLE, INTERLOCK) VIDEO DISPLAY TERMINAL PUMP, COMPRESSOR, AIR PRESSURE TOOL HEATING EQUIPMENT WELDING EQUIPMENT	INANIMATE OBJECT BOX, BARREL, ETC. PAPER METAL ITEM, MINERAL NEEDLE GLASS SCRAP, TRASH, WOOD FOOD CLOTHING, APPAREL, SHOES
VEHICLE AS DRIVER OF PRIVATELY OWNED, RENTAL VEH. AS PASSENGER OF PRIVATELY OWNED, RENTAL VEH. DRIVER OF GOVERNMENT VEHICLE PASSENGER OF GOVERNMENT VEHICLE COMMON CARRIER (AIRLINE, BUS, ETC.) AIRCRAFT (NOT COMMERCIAL) BOAT, SHIP, BARGE	ANIMATE OBJECT DOG OTHER ANIMAL PLANT INSECT HUMAN (VIOLENCE) HUMAN (COMMUNICABLE DISEASE) BACTERIA, VIRUS (NOT HUMAN CONTACT)
MATERIAL HANDLING EQUIPMENT EARTHMOVER (TRACTOR, BACKHOE, ETC.) CONVEYOR (FOR MATERIAL AND EQUIPMENT) ELEVATOR, ESCALATOR, PERSONNEL HOIST HOIST, SLING CHAIN, JACK CRANE FORKLIFT HANDTRUCK , DOLLY	PERSONAL PROTECTIVE EQUIPMENT PROTECTIVE CLOTHING, SHOES, GLASSES, GOGGLES RESPIRATOR, MASK DIVING EQUIPMENT SAFETY BELT, HARNESS PARACHUTE

SECTION 7 - CAUSAL FACTORS

Review thoroughly. Answer each question by marking the appropriate block. **NOTE!** If any answer is yes, explain in section 5 above.

(1) **DESIGN** - Did inadequacies associated with the building or work site play a role? Would an improved design or layout of the equipment or facilities reduce the likelihood of similar accidents? Were the tools or other equipment designed and intended for the task at hand?

(2) **INSPECTION/MAINTENANCE** - Did inadequately or improperly maintained equipment, tools, workplace, etc., create or worsen any hazards that contributed to the accident? Would better equipment, facility, work site or work activity inspections have helped avoid the accident?
(3) **PERSONS PHYSICAL CONDITION** - Do you feel that the accident would probably not have occurred if the employee was in "good" physical condition? If the person involved in the accident had been in better physical condition, would the accident have been less severe or avoided altogether? Was overexertion a factor?
(4) **OPERATION PROCEDURES** - Did lack of or inadequacy within established operating procedures contribute to the accident? Did any aspect of the procedures introduce any hazard to, or increase the risk associated with the work process? Would establishment or improvement of operating procedures reduce the likelihood of similar accidents?
(5) **JOB PRACTICES** - Were any of the provision of the Safety and Health Requirements Manual (EM 385-1-1) violated? Was the task being accomplished in a manner which was not in compliance with an established job hazard analysis or activity hazard analysis? Did any established job practice (including EM 385-1-1) fail to adequately address the task or work process? Would better job practices improve the safety of the task?
(6) **HUMAN FACTORS** - Was the person under undue stress (either internal or external to the job)? Did the task tend toward overloading the capabilities of the person: i.e., did the job require tracking and reacting to many external inputs such as displays, alarms, or signals? Did the arrangement of the workplace tend to interfere with efficient task performance? Did the task require reach strengths, endurance, agility, etc., at or beyond the capabilities of the employee? Was the work environment ill-adapted to the person? Did the person need more training, experience, or practice in doing the task? Was the person inadequately rested to perform safely?
(7) **ENVIRONMENTAL FACTORS** - Did any factors such as moisture, humidity, rain, snow, sleet, hail, ice, fog, cold, heat, sun temperature changes, wind, tides, floods, currents, terrain; dust, mud, glare, pressure changes, lighting, etc., play a part in the accident?
(8) **CHEMICAL AND PHYSICAL AGENT FACTORS** - Did exposure to chemical agents (either single shift exposure or long-term exposure such as dusts, fibers, (asbestos, etc.), silica, gases (carbon, monoxide, chlorine, etc.), mists, steam, vapors, fumes, smoke, other particulates, liquid or dry chemicals that are corrosive, toxic, explosive or flammable, by-products of combustion or physical agents such as noise, ionizing radiation, non-ionizing radiation (UV radiation created during welding, etc.) contribute to the accident/incident?
(9) **OFFICE FACTORS** - Did the fact that the accident occurred in an office setting or to an office worker have a bearing on its cause? For example, office workers tend to have less experience and training in performing tasks such as lifting office furniture. Did physical hazards within the office environment contribute to the hazard?
(10) **SUPPORT FACTORS** - Was the person using an improper tool for the job? Was inadequate time available or utilized to safely accomplish the task? Were less than adequate personnel resources (in terms of employee skills, number of workers, and adequate supervision) available to get the job done properly? Was funding available, utilized and adequate to provide proper tools, equipment, personnel, site preparation, etc.
(11) **PERSONAL PROTECTIVE EQUIPMENT** - Did the person fail to use appropriate personal protective equipment (gloves, eye protection, hard-toed shoes, respirator, etc) for the task or environment? Did protective equipment provided or worn fail to provide adequate protection from the hazard(s)? Did lack of or inadequate maintenance of protective gear contribute to the accident?
(12) **DRUGS/ALCOHOL** - Is there any reason to believe the person's mental or physical capabilities, judgment, etc., were impaired or altered by the use of drugs or alcohol? Consider the effects of prescription medicine and over the counter medications as well as illicit drug use. Consider the effect of drug or alcohol induced "hangovers".
(13) **JOB/ACTIVITY HAZARD ANALYSIS** - Was a written Job/Activity Analysis completed for the task being performed at the time of the accident? If one was made, did it address the hazard adequately or does it need to be updated? If none made, will one be made? These may also need to be addressed in the Corrective Actions Taken section. Mark the appropriate box. If one was made, attach a copy of the analysis to the report.
(14) **MANAGEMENT** - Did the lack of supervisor or management support play a part in the mishap? Mark the appropriate box.

SECTION - 8 OSHA INFORMATION - Complete this section if applicable

SECTION 9 - REPORT PREPARER

Providing a completed CSIR to the Contracting Officer is the PRIME CONTRACTOR'S RESPONSIBILITY. Enter the name, date of report, title, employer, phone number and signature of person completing the accident report and provide it to the Contracting Officer, or his representative, responsible for oversight of that contractor activity. **NOTE!** If prepared by other than the Prime Contractor, a person employed by the Prime Contractor must sign that they have reviewed and concur with the report and it's findings (e.g. company owner, project supervisor/foreman, Safety Officer, etc.).

CONTRACTOR SITE SAFETY ASSESSMENT

ROICC OFFICE: _____ **DATE:** _____

CONTRACTOR: _____

CONTRACT TITLE: _____ **CONTRACT % COMPLETE:** _____

CONTRACTOR SUPERINTENDENT: _____

CATEGORY:

PREPARATORY PHASE (Planning)	(Yes)	(No)	(N/A)	1) Activity Hazard Analysis performed and used on the site for each definable feature of work?	
	(Yes)	(No)	(N/A)	2) Are weekly safety meetings and indoctrination held on site and documented for all workers?	
Comments/Notes:	(Yes)	(No)	(N/A)	3) Is the submitted safety plan on site and in use?	
	(Yes)	(No)	(N/A)	4) Is the Activity Hazard Analysis reviewed during the preparatory inspection?	
	(Yes)	(No)	(N/A)	5) Hazardous materials program in place with MSDS sheets on site and maintained?	
	(Yes)	(No)	(N/A)	6) EM 385-1-1 available on the site?	
	(Yes)	(No)	(N/A)	7) Other? Extra Credit?	
OFFICE TRAILER GENERAL	(Yes)	(No)	(N/A)	8) Are office and storage trailers anchored?	
	(Yes)	(No)	(N/A)	9) Are emergency phone numbers posted?	
Comments/Notes:	(Yes)	(No)	(N/A)	10) Is a phone available?	
	(Yes)	(No)	(N/A)	11) First aid log maintained (contractors must use OSHA Form 300)?	
	(Yes)	(No)	(N/A)	12) Toilet facilities available?	
	(Yes)	(No)	(N/A)	13) Site posted "HARD HAT AREA," "NOISE HAZARD," "CONSTRUCTION AREA," etc., as required?	
	(Yes)	(No)	(N/A)	14) Garbage cans and dumpsters available?	
	(Yes)	(No)	(N/A)	15) Jobsite cleaned daily?	
	(Yes)	(No)	(N/A)	16) Is traffic control around site adequate?	
	(Yes)	(No)	(N/A)	17) Other? Extra Credit?	
FIRE PREVENTION	(Yes)	(No)	(N/A)	18) Are fire extinguishers available, fully charged, and easily visible within 75 feet for low hazard areas?	
Comments/Notes:	(Yes)	(No)	(N/A)	19) Is fuel stored in proper containers?	
	(Yes)	(No)	(N/A)	20) Are hot work permits being obtained?	
	(Yes)	(No)	(N/A)	21) Are fire watches provided?	
	(Yes)	(No)	(N/A)	22) Are gas cylinders stored upright and secured with chain or rope?	
	(Yes)	(No)	(N/A)	23) Is Housekeeping acceptable?	
	(Yes)	(No)	(N/A)	24) Other? Extra Credit?	
SCAFFOLD SAFETY	(Yes)	(No)	(N/A)	25) Are daily scaffold inspections performed by designated competent person?	
	(Yes)	(No)	(N/A)	26) Planks overlapped not less than 6" or more than 12" over end supports with toe boards in place?	
Comments/Notes:	(Yes)	(No)	(N/A)	27) Tubing pinned properly and all cross bracing in place?	
	(Yes)	(No)	(N/A)	28) If scaffold height is 4X smallest base dimension, is system secured to structure?	
	(Yes)	(No)	(N/A)	29) All guardrails are in place?	
	(Yes)	(No)	(N/A)	30) Full work platform at each working level with no cracks/splits?	
	(Yes)	(No)	(N/A)	31) Safe access provided to each working level?	
	(Yes)	(No)	(N/A)	32) Scaffold and components not overloaded?	
	(Yes)	(No)	(N/A)	33) Is scaffold system plumb and level?	
	(Yes)	(No)	(N/A)	34) Suspended scaffold systems using independent personal fall arrest system?	
	(Yes)	(No)	(N/A)	35) Other? Extra Credit?	
FALL PROTECTION	(Yes)	(No)	(N/A)	36) Is a full body harness used where required?	
	(Yes)	(No)	(N/A)	37) Tied off at all times to structural element capable of supporting 5,000 lbs/person?	
Comments/Notes:	(Yes)	(No)	(N/A)	38) Is protection provided for all personnel working in areas where they could fall 6' or more?	
	(Yes)	(No)	(N/A)	39) Are employees trained for fall protection systems in use?	
	(Yes)	(No)	(N/A)	40) Does the contractor have a certified competent person?	
	(Yes)	(No)	(N/A)	41) Have standard guardrails been provided where required?	
	(Yes)	(No)	(N/A)	42) Have horizontal life lines been designed and installed under supervision of a qualified person?	
	(Yes)	(No)	(N/A)	43) Other? Extra Credit?	

CATEGORY:

LADDER SAFETY	(Yes)	(No)	(N/A)	44) Do ladders extend 3' above landing platform and tied to structure?	
Comments/Notes:	(Yes)	(No)	(N/A)	45) Are ladders used with hand tools only?	
	(Yes)	(No)	(N/A)	46) Are ladder base distances from structure 1/4 height?	
	(Yes)	(No)	(N/A)	47) Are floor openings either covered or surrounded by a guardrail?	
	(Yes)	(No)	(N/A)	48) Electricians not using portable "conductive" ladders?	
	(Yes)	(No)	(N/A)	49) Stairways provided on all structures over 20' during construction and supplied with guardrail?	
	(Yes)	(No)	(N/A)	50) Portable step ladders over 20' not used on the site?	
	(Yes)	(No)	(N/A)	51) Are ladders properly used?	
	(Yes)	(No)	(N/A)	52) Other? Extra Credit?	
EXCAVATIONS	(Yes)	(No)	(N/A)	53) Does excavation over 4' deep have a ladder within 25' and two means of egress?	
Comments/Notes:	(Yes)	(No)	(N/A)	54) Has proper slope or trench box/shoring been provided?	
	(Yes)	(No)	(N/A)	55) Is water controlled/removed?	
	(Yes)	(No)	(N/A)	56) Is excavated material at least 2' back from trench edge?	
	(Yes)	(No)	(N/A)	57) Is excavation barricaded, etc., to prevent workers and public from falling into trench/hole?	
	(Yes)	(No)	(N/A)	58) In locations of known or suspected contamination, is excavation atmosphere monitored?	
	(Yes)	(No)	(N/A)	59) Does contractor have certified competent person on site?	
	(Yes)	(No)	(N/A)	60) Other? Extra Credit?	
ELECTRICAL	(Yes)	(No)	(N/A)	61) Are temporary power panels and receptacles protected from weather?	
Comments/Notes:	(Yes)	(No)	(N/A)	62) Are GFCI's in use for site tools ?	
	(Yes)	(No)	(N/A)	63) Are temporary lights rigged and secured to supports properly, and with covers?	
	(Yes)	(No)	(N/A)	64) If overhead power lines are in area, are operations maintaining required distance or isolation?	
	(Yes)	(No)	(N/A)	65) Is lockout/tagout program in effect?	
	(Yes)	(No)	(N/A)	66) Has a sketch of proposed temporary power distribution been submitted/accepted before installing?	
	(Yes)	(No)	(N/A)	67) Other? Extra Credit?	
	(Yes)	(No)	(N/A)	68) Other? Extra Credit?	
CRANES	(Yes)	(No)	(N/A)	69) Has periodic inspection been performed prior to use on site IAW EM 385-1-1, App. H?	
Comments/Notes:	(Yes)	(No)	(N/A)	70) Are App. H daily start up inspections performed by operator and submitted with DRI?	
	(Yes)	(No)	(N/A)	71) Is crane operator qualified IAW EM 385-1-1, App. G, and is crane certification posted in cab?	
	(Yes)	(No)	(N/A)	72) Are workers protected from the crane swing radius and prevented from passing under the load?	
	(Yes)	(No)	(N/A)	73) Are rigging cables and slings in good repair free of kinks and cracks?	
	(Yes)	(No)	(N/A)	74) Is the crane level and on firm ground and outriggers in use with appropriate cribbing?	
	(Yes)	(No)	(N/A)	75) Is crane side loading prohibited?	
	(Yes)	(No)	(N/A)	76) Near electric power sources, are rules followed for clearance/isolation in operating zone?	
	(Yes)	(No)	(N/A)	77) Is crane equipped with anti two-block device if required?	
	(Yes)	(No)	(N/A)	78) Other? Extra Credit?	
CONFINED SPACES	(Yes)	(No)	(N/A)	79) Has entry plan been submitted and accepted?	
	(Yes)	(No)	(N/A)	80) Is atmosphere being monitored?	
Comments/Notes:	(Yes)	(No)	(N/A)	81) Is space being ventilated?	
	(Yes)	(No)	(N/A)	82) Are entrants, attendants and entry supervisor properly trained?	
	(Yes)	(No)	(N/A)	83) Is rescue/retrieval system in place?	
	(Yes)	(No)	(N/A)	84) Are daily entry permits posted at point of entry and signed by entry supervisor?	
	(Yes)	(No)	(N/A)	85) Is point of entry posted "**DANGER CONFINED SPACE**"?	
	(Yes)	(No)	(N/A)	86) Has blanking or locking out of systems taken place?	
	(Yes)	(No)	(N/A)	87) Other? Extra Credit?	
ROOFING	(Yes)	(No)	(N/A)	88) Are kettles at least 25 feet away from buildings?	
Comments/Notes:	(Yes)	(No)	(N/A)	89) Has an employee fall protection system been implemented and in proper use?	
	(Yes)	(No)	(N/A)	90) Are skylights and roof penetrations covered or barricaded appropriately?	
	(Yes)	(No)	(N/A)	91) Has the roof been evaluated for its ability to support the intended construction loads?	
	(Yes)	(No)	(N/A)	92) Has the roof been surveyed for deterioration?	
	(Yes)	(No)	(N/A)	93) Are two fire extinguishers at the kettle?	
	(Yes)	(No)	(N/A)	94) Fuel cylinder a minimum of 10' from open flame?	
	(Yes)	(No)	(N/A)	95) Other? Extra Credit?	
	(Yes)	(No)	(N/A)	96) Other? Extra Credit?	

CATEGORY:

EQUIPMENT

Comments/Notes:

(Yes)	(No)	(N/A)	97) Are forklift operators qualified through training at the site (certificate included in Safety Plan)?	
(Yes)	(No)	(N/A)	98) Does mobile equipment have rollover cages and backup alarms, with moving parts adequately guarded?	
(Yes)	(No)	(N/A)	99) Are equipment operations maintaining safe clearance from electrical power lines?	
(Yes)	(No)	(N/A)	100) Do modifications meet safety rating per manufacturer (i.e., lifting personnel with forklift)?	
(Yes)	(No)	(N/A)	101) Are safety lashings provided for high pressure hose connections, i.e., air compressors?	
(Yes)	(No)	(N/A)	102) Are workers clear of blind spots associated with mobile construction equipment?	
(Yes)	(No)	(N/A)	103) Do aerial lifts have basket/platform with guardrail?	
(Yes)	(No)	(N/A)	104) Are workers not extending over guardrail of aerial lifts?	
(Yes)	(No)	(N/A)	105) Are articulating boom platforms (JLG type) used with Full Body Harness attached to boom or basket?	
(Yes)	(No)	(N/A)	106) Other? Extra Credit?	
(Yes)	(No)	(N/A)	107) Other? Extra Credit?	

DEMOLITION

Comments/Notes:

(Yes)	(No)	(N/A)	108) Has demolition plan been submitted and accepted?	
(Yes)	(No)	(N/A)	109) If waste is being dropped > 6' is it in an enclosed chute and is area secured from traffic?	
(Yes)	(No)	(N/A)	113) For building demolition, has notification been made to State having jurisdiction?	
(Yes)	(No)	(N/A)	114) Are nails removed from scrap lumber/materials?	
(Yes)	(No)	(N/A)	115) Other? Extra Credit?	
(Yes)	(No)	(N/A)	116) Other? Extra Credit?	

PPE

Comments/Notes:

(Yes)	(No)	(N/A)	117) Workers wearing leather shoes (not tennis), long pants, sleeved shirts, and steel toes where required?	
(Yes)	(No)	(N/A)	118) Are hare hats being worn?	
(Yes)	(No)	(N/A)	119) Are safety glasses where appropriate?	
(Yes)	(No)	(N/A)	120) Hearing protection where appropriate? (if you need to yell to converse)	
(Yes)	(No)	(N/A)	121) Respirators where appropriate?	
(Yes)	(No)	(N/A)	122) Impalement protection provided where personnel could work above vertical impalement?	
(Yes)	(No)	(N/A)	123) Is lighting adequate?	
(Yes)	(No)	(N/A)	124) Other? Extra Credit?	

ABATEMENT

Comments/Notes:

(Yes)	(No)	(N/A)	125) Has abatement plan been submitted and accepted?	
(Yes)	(No)	(N/A)	126) Is independent air monitoring being performed as required inside and outside barriers?	
(Yes)	(No)	(N/A)	127) Is containment in place without integrity compromise?	
(Yes)	(No)	(N/A)	128) Are employees utilizing appropriate PPE?	
(Yes)	(No)	(N/A)	129) If negative air is used, are fans used continuously and monitored for pressure differential?	
(Yes)	(No)	(N/A)	130) Has baseline been performed and necessary final clearance readings taken?	
(Yes)	(No)	(N/A)	131) Are inspections by independent PQP performed prior to barrier removal?	
(Yes)	(No)	(N/A)	132) Is waste material properly containerized and stored?	
(Yes)	(No)	(N/A)	133) Are air monitoring results provided to ROICC?	
(Yes)	(No)	(N/A)	134) Are waste shipment records provided to ROICC?	
(Yes)	(No)	(N/A)	135) Other? Extra Credit?	

WATERFRONT ACTIVITIES

Comments/Notes:

(Yes)	(No)	(N/A)	136) Are employees wearing appropriate flotation devices (PFDs)?	
(Yes)	(No)	(N/A)	137) Is a rescue skiff available?	
(Yes)	(No)	(N/A)	138) Are emergency life rings available?	
(Yes)	(No)	(N/A)	139) If diving operations are taking place, has a dive plan been submitted and accepted?	
(Yes)	(No)	(N/A)	140) Does dive team consist of proper number and qualifications for employees?	
(Yes)	(No)	(N/A)	141) Other? Extra Credit?	

SCORING: **Total applicable for each category = X (where X includes responses for category of "Yes" and "No" but does not include N/A)**

Total with "Yes" responses for each category = Y

SCORE FOR EACH CATEGORY: **SCORE RATE EQUATION = Y / X**

1 PREPARATORY PHASE: _____
2 OFFICE TRAILER GENERAL: _____
3 FIRE PREVENTION: _____
4 SCAFFOLD SAFETY: _____
5 FALL PROTECTION: _____
6 LADDER SAFETY: _____
7 EXCAVATIONS: _____
8 ELECTRICAL: _____
9 CRANES: _____
10 CONFINED SPACES: _____
11 ROOFING: _____
12 EQUIPMENT: _____
13 DEMOLITION: _____
14 PPE: _____
15 ABATEMENT: _____
16 WATERFRONT ACTIVITIES: _____

OVERALL RATING = AVERAGE RATING FOR ALL CATEGORIES: _____

Attachment 6-15

Utility Outage Request

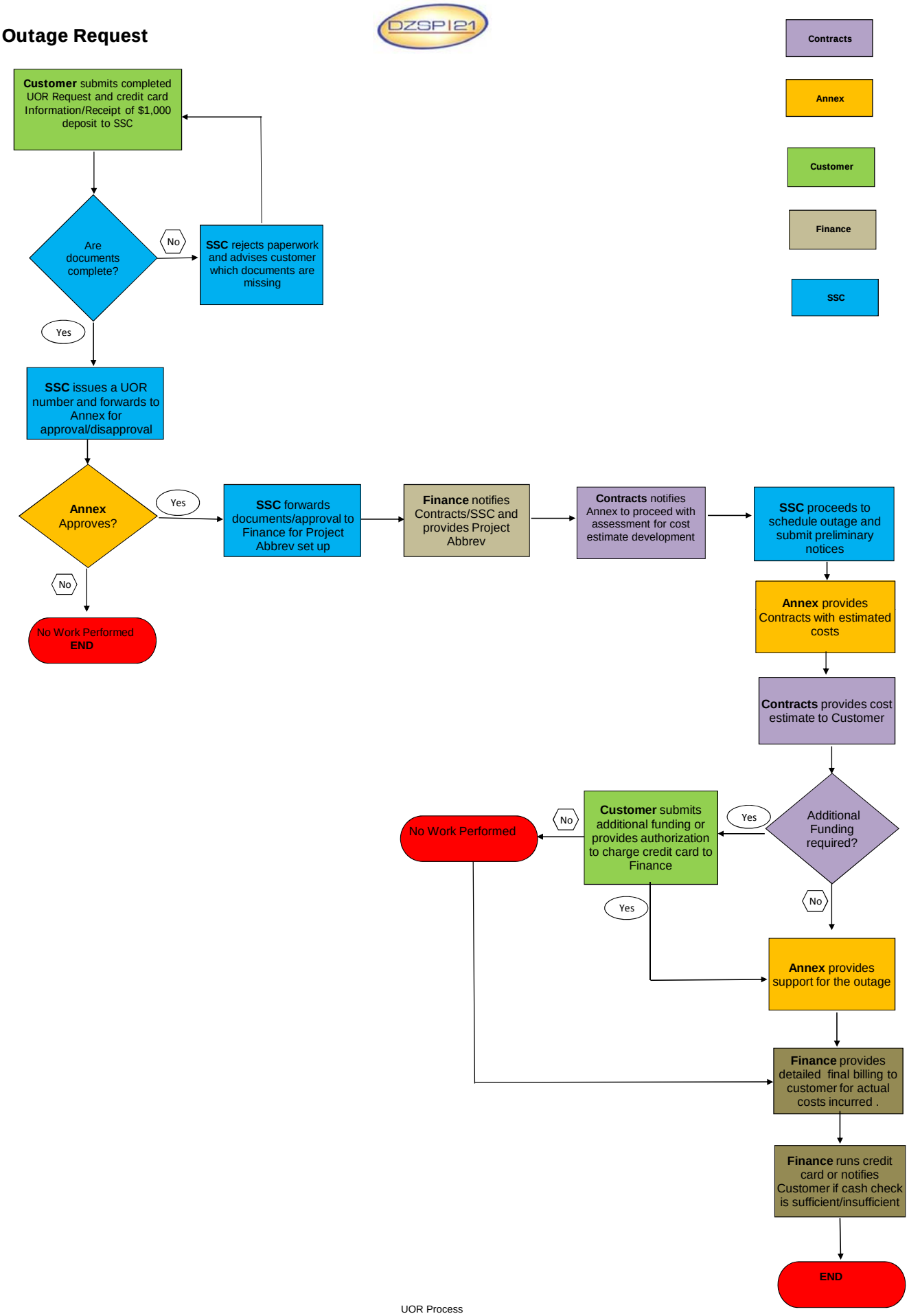

UOR Process

BOSC Utility Services

Requesting and Paying for Work Directly Through DZSP 21

The procedure for contractors to schedule and pay for utility services from the Navy Base Operations Support Contractor are as follows:

- **Contractors must submit the following required documents to Service Support Center (SSC):**
    1. Completed Utility Outage/Connection/Service Request Form
    2. Completed customer Payment Information Sheet.

        Note: Payments made by check or credit card must be issued by the organization listed on the "Utility Outage/Connection/Service Request" form.

    3. Drawings/sketches and other required documents for the appropriate Annexes.

    Note: DZSP 21 will not accept any incomplete paperwork.

- **Contractors are encouraged to submit work requests via e-mail and appropriate forms will be provided upon request.**

- **Service Support Center (SSC) can be reached at (671) 333-2011 or in person in building 372 between the hours of 0730 and 1630, or via e-mail at dzsp21ssc@dzsp21.com.**
    - Services including, but not limited to, water, sewer, electrical, steam or fire system outages, trailer hook-ups, and meter installations should be requested through SSC.
    - DZSP 21 requires a minimum of 30 days advance notice for utility outages before the 1st requested date. NOTE: Requested dates are subject to change due to the extent of the outage requested.

- **Contractors must submit payment to DZSP 21 before any work will be scheduled.**
    - DZSP 21 accepts credit cards, cash, or company checks made payable to DZSP 21 LLC.
    - Credit cards – Credit card information must be submitted to DZSP 21 Finance.
- Cash or check - A minimum deposit of $1,000.00 is required for each Utility Outage Request. NOTE: The $1,000.00 deposit is for DZSP 21 labor hours for the assessment of the outage. This amount does not include any costs associated with utilities consumption or meters.

- **Upon receipt of deposit/credit card information, SSC will coordinate with the appropriate Annexes.**
  - The Annex performing the outage will assess the areas affected and provide an estimate to DZSP 21 Contracts who will then provide a cost estimate to the customer.
  - If the cost estimate is less than the $1,000.00 deposit, the difference will be refunded to the customer once the outage is complete. However, if the estimate is greater than the $1,000.00 deposit, the customer will need to fund the difference prior to commencement of scheduling the outage request.

- **Once the work is completed, DZSP 21 Finance will submit a detailed final invoice to the customer for the actual costs.**
  - Credit Card – DZSP 21 will charge the credit card for the actual costs of the outage if it exceeds the funded amount.
  - Cash, check or credit card – If actual costs are less than the funded amount, the refund for the difference will be issued by check to the organization listed on the "Utility Outage/Connection/Service Request" form. If actual costs are greater than the funded amount, customer will need to submit additional funding.

UTILITY OUTAGE/CONNECTION/SERVICE REQUEST NO

☐ STEAM AND DEMINERALIZED WATER ☐ ELECTRICAL POWER ☐ POTABLE WATER ☐ WASTEWATER

☐ OTHER (Describe) ☐ OUTAGE ☒ CONNECTION ☐ DISCONNECTION ☐ SERVICE

FROM (Name)	PHONE/FAX NO.	DATE
(Organization)	PHONE/FAX NO.	WR/CONTRACT OR PROJECT NO
Navy Contracting POC (If Contractor Originated)	PHONE/FAX NO.	PROJECT ABBREV.
LOCATION/AREA		ROM $

LENGTH AND DATE OF OUTAGE (MUST BE SUBMITTED TO DZSP21 30 DAYS BEFORE REQUESTED DATE)

FIRST CHOICE:	FROM DATE/TIME:		TO DATE/TIME:	
SECOND CHOICE:	FROM DATE/TIME:		TO DATE/TIME:	

JUSTIFICATION

OTHER/SPECIAL INSTRUCTIONS (SPECIFY)

AFFECTED LOCATIONS(S): HYDRANT NO., VALUE NO., STREET NAME, ETC.

ATTACHMENTS ☐ DRAWINGS ☐ PERMITS ☐ SCOPE OF WORK

AFFECTED FACILITIES

BLDG. NO.	BLDG. NAME	BLDG. NO.	BLDG. NAME
☐		☐	
☐		☐	
☐		☐	
☐		☐	

SIGNATURE DATE COPY TO

PWC COMPTROLLER		
DATE RECEIVED	ELECTRICAL SERVICE $	CONNECTION JO# CONSUMPTION JO#
DATE RECEIVED	WATER SERVICE $	CONNECTION JO# CONSUMPTION JO#
DATE RECEIVED	OTHER SERVICE/SPECIFY $	CONNECTION JO# CONSUMPTION JO#
DATE RECEIVED		
	COMPTROLLER POC/SIGNATURE	

DZSP | 21

UTILITY OUTAGE/CONNECTION/SERVICE REQUEST NO _____

OUTAGE COORDINATED BY DZSP 21			
ORG./DEPT	**NAME**	**DATE**	**NOTES**
☐ SERVICE SUPPORT			
☐ FME (STEAM/ ELEC/ WATER/ WW)			
☐ HOUSING			
☐ FIRE DEPT.			
☐ AAFB			
☐ NFM PWO/APWO			
☐ MWR			
☐ SECURITY			
☐ BLDG MANAGER			
☐ ENVIRONMENTAL			
☐ SAFETY			
☐ PAO			
☐ **Does the project require future outages of this utility in addition to this one?**			
☐ **Can the work requiring this outage be incorporated into a future outage without significant negative impact on the project completion date?**			
☐			
☐			
☐			

TRANSFER AND ACCEPTANCE OF MILITARY REAL PROPERTY

Form Approved
OMB No. 0704-0188

PAGE OF PAGES

The public reporting burden for this collection of information is estimated to average 30 minutes per response, including the time for reviewing instructions, searching existing data sources, gathering and maintaining the data needed, and completing and reviewing the collection of information. Send comments regarding this burden estimate or any other aspect of this collection of information, including suggestions for reducing the burden, to the Department of Defense, Executive Services Directorate (0704-0188). Respondents should be aware that notwithstanding any other provision of law, no person shall be subject to any penalty for failing to comply with a collection of information if it does not display a currently valid OMB control number.

PLEASE DO NOT RETURN YOUR COMPLETED FORM TO THE ABOVE ORGANIZATION.

1. FROM *(Installation/Activity/District and ZIP Code)*	2. DATE PREPARED *(YYYYMMDD)*	3. PROJECT/JOB NUMBER	4. SERIAL NUMBER
5. TO *(Installation/Activity/Service, ZIP Code & INSNO)*	6. SITE/INSNO/ NAME	7. CONTRACT NUMBER(S)	8. DRAWING NUMBER(S)

9. TRANSACTION DETAILS

a. ☐ NEW CONST. ☐ EXISTING FAC. ☐ CAPITAL IMP. ☐ OTHER *(Specify)*

b. ☐ PHYS. COM. AVAIL. ☐ BENF/O ☐ PARTIAL BOD ☐ FINANCIAL COM. ☐ OTHER *(Specify)*

c. ☐ DRAFT ☐ FINAL ☐ INTERIM

d. EFFECTIVE DATE *(YYYYMMDD)*

10. ITEM NO.	11. FACILITY NO.	12. CATEGORY CODE	13. CATCODE DESCRIPTION	14. TYPE	AREA 15. UNIT OF MEAS 1	AREA 16. TOTAL QUANTITY UM 1	OTHER 17. UNIT OF MEAS 2	OTHER 18. TOTAL QUANTITY UM 2	19. COST	20. FUND SOURCE	21. FUND ORG	22. INTER-EST CODE	23. ITEM REMARKS

24. STATEMENT OF COMPLETION. The facilities listed hereon are in accordance with maps, drawings, and specifications and change orders approved by the authorized representative of the using agency except for the deficiencies listed on the reverse side.

a. TRANSFERRED BY *(Typed Name and Signature)*

b. DATE SIGNED *(YYYYMMDD)*

c. TITLE *(Area Engr./Base Engr./DPW)*

25.a. ACCEPTED BY *(Typed Name and Signature)*

b. DATE SIGNED *(YYYYMMDD)*

c. TITLE *(DPW/RPAO)*

26. PROPERTY VOUCHER NUMBER

DD FORM 1354, MAR 2004 PREVIOUS EDITION IS OBSOLETE. Adobe Professional 7.0

27. CONSTRUCTION DEFICIENCIES *(attach blank sheet for continuations)*	28. PROJECT REMARKS *(attach blank sheet for continuations)*

INSTRUCTIONS

GENERAL. This form has been designed and issued for use in connection with the transfer of military real property between the military departments and to or from other government agencies. It supersedes ENG Forms 290 and 290B (formerly used by the Army and Air Force) and NAVDOCKS Form 2317 (formerly used by the Navy).

Existing instructions issued by the military departments relative to the preparation of DD Form 1354 are applicable to this revised form to the extent that the various items and columns on the superseded forms have been retained. The military departments may promulgate additional instructions, as appropriate.

For detailed instructions on how to fill out this form, please refer to Unified Facilities Criteria (UFC) 1-300-08, dated 17 December 2003.

SPECIFIC DATA ITEMS.

1. **From.** Name and address of the transferring agency.

2. **Date Prepared.** Date of actual preparation. Enter all dates in YYYYMMDD format (Example: March 31, 2004 = 20040331).

3. **Project/Job Number.** Project number on a DD Form 1391 or Individual Job Order Number.

4. **Serial Number.** Sequential serial number assigned by the preparing organization (e.g., 2004-0001).

5. **To.** Name and address of the receiving installation, activity, and service of the Real Property Accountable Officer (RPAO).

6. **Site/INSNO and Name.** Site or installation number and site name where the constructed facility is located.

7. **Contract Number(s).** Contract number(s) for this project.

8. **Drawing Number(s).** Drawing number(s) or CAD identifier(s) for project components.

9. **Transaction Details.**
   a. Type of Transaction. Mark (X) only one box.
   b. When/Event. When or event causing preparation of DD Form 1354. X only one box.
   c. Version. Draft, interim, or final DD Form 1354. X only one box.
   d. Effective Date. Effective date for transaction; start date for depreciation.

10. **Item Number.** Use a separate item number for each facility, no item number for additional usages.

11. **Facility Number.** Unique facility number identified in Real Property Inventory.

12. **Category Code.** The category code describes the facility usage.

13. **Catcode Description.** The category code name which describes the facility usage.

14. **Type.** Type of construction: P for Permanent; S for Semipermanent; T for Temporary.

15. **Area: Unit of Meas 1.** Area unit of measure; use SF, SY, AC only.

16. **Total Quantity UM 1.** The total area for the measure identified in Item 15. Use negative numbers for demolition.

17. **Other: Unit of Meas 2.** Unit of Measure 2 is the capacity or other measurement unit (e.g., LF, MB, EA, etc.).

18. **Total Quantity UM 2.** The total capacity/other for the measure identified in Item 17.

19. **Cost.** Cost for each facility; for capital improvements to existing facilities, show amount of increase only.

20. **Fund Source.** Enter the Fund Source Code for this item, i.e., 01-MILCON, 02-BRAC, 03-O&M, etc.

21. **Funding Organization.** Enter the code for the organization responsible for replacing this facility at the end of its useful life, i.e., 00-Army Active, 01-Army Reserve, 02-Army National Guard, etc.

22. **Interest Code.** Enter the code that reflects government interest or ownership in the facility, i.e., 01-Owned by DoD, 02-Owned by Federal Government (non-DoD), etc.

23. **Item Remarks.** Remarks pertaining only to the item number identified in Item 10; show cost sharing.

24. **Statement of Completion.** Typed name, signature, title, and date of signature by the responsible transferring individual or agent.

25. **Accepted By.** Typed name, signature, title, and date of signature by the RPAO or accepting official.

26. **Property Voucher Number.** Next sequential number assigned by the RPAO in voucher register.

27. **Construction Deficiencies.** List construction deficiencies in project during contractor turnover inspection.

28. **Project Remarks.** Project level remarks, continuation of blocks, and used to explain "other" entries in Item 9.

DD FORM 1354 (BACK), MAR 2004