DRAWING INDEX VOLUME 3

DWG NO.	DRAWING TITLE	NAVFAC DWG NO.	PW DWG NO.	SHEET NO.
G-031	TITLE SHEET, LOCATION MAP	16027959	78606	1
G-032	DRAWING INDEX VOLUME 3	16027960	78607	2
G-033	DRAWING INDEX VOLUME 3	16027961	78608	3
A-001	GENERAL NOTES, SYMBOLS, AND ABBREVIATIONS	16027962	78609	4
A-051	FIRST FLOOR EGRESS PLAN – SOUTH	16027963	78610	5
A-052	FIRST FLOOR EGRESS PLAN – NORTH	16027964	78611	6
A-053	MEZZANINE EGRESS PLAN – SOUTH	16027965	78612	7
A-054	MEZZANINE EGRESS PLAN – NORTH	16027966	78613	8
A-055	LEVEL 2 & 2 M EGRESS PLAN – SOUTH	16027967	78614	9
A-056	SECOND FLOOR EGRESS PLAN – NORTH	16027968	78615	10
A-057	THIRD AND FORTH FLOOR EGRESS PLANS	16027969	78616	11
A-058	FIFTH AND SIXTH FLOOR EGRESS PLANS	16027970	78617	12
A-091	OVERALL FIRST FLOOR PLAN	16027971	78618	13
A-092	OVERALL MEZZANINE OVERALL PLAN	16027972	78619	14
A-093	OVERALL SECOND FLOOR PLAN	16027973	78620	15
A-094	OVERALL THIRD, FOURTH, AND FIFTH FLOOR PLANS	16027974	78621	16
A-095	OVERALL SIXTH AND SEVENTH FLOOR PLANS	16027975	78622	17
A-096	OVERALL ROOF PLAN	16027976	78623	18
AD111A	PARTIAL FIRST FLOOR DEMO PLAN – AREA A	16027977	78624	19
AD111B	PARTIAL FIRST FLOOR DEMO PLAN – AREA B	16027978	78625	20
AD111C	PARTIAL FIRST FLOOR DEMO PLAN – AREA C	16027979	78626	21
AD111D	PARTIAL FIRST FLOOR DEMO PLAN – AREA D	16027980	78627	22
AD111F	PARTIAL FIRST FLOOR DEMO PLAN – AREA F	16027981	78628	23
AD111G	PARTIAL FIRST FLOOR DEMO PLAN – AREA G	16027982	78629	24
AD111H	PARTIAL FIRST FLOOR DEMO PLAN – AREA H	16027983	78630	25
AD111J	PARTIAL FIRST FLOOR DEMO PLAN – AREA J	16027984	78631	26
AD111K	PARTIAL FIRST FLOOR DEMO PLAN – AREA K	16027985	78632	27
AD111L	PARTIAL FIRST FLOOR DEMO PLAN – AREA L	16027986	78633	28
AD111M	PARTIAL FIRST FLOOR DEMO PLAN – AREA M	16027987	78634	29
AD111N	PARTIAL FIRST FLOOR DEMO PLAN – AREA N	16027988	78635	30
AD111P	PARTIAL FIRST FLOOR DEMO PLAN – AREA P	16027989	78636	31
AD111Q	PARTIAL FIRST FLOOR DEMO PLAN – AREA Q	16027990	78637	32
AD115A	PARTIAL MEZZANINE DEMO PLAN – AREA A	16027991	78638	33
AD115B	PARTIAL MEZZANINE DEMO PLAN – AREA B	16027992	78639	34
AD115C	PARTIAL MEZZANINE DEMO PLAN – AREA C	16027993	78640	35
AD115D	PARTIAL MEZZANINE DEMO PLAN – AREA D	16027994	78641	36
AD115G	PARTIAL MEZZANINE DEMO PLAN – AREA G	16027995	78642	37
AD115K	PARTIAL MEZZANINE DEMO PLAN – AREA K	16027996	78643	38
AD115M	PARTIAL MEZZANINE DEMO PLAN – AREA M	16027997	78644	39
AD115N	PARTIAL MEZZANINE DEMO PLAN – AREA N	16027998	78645	40
AD121A	PARTIAL SECOND FLOOR DEMO PLAN – AREA A	16027999	78646	41
AD121B	PARTIAL SECOND FLOOR DEMO PLAN – AREA B	16028000	78647	42
AD121C	PARTIAL SECOND FLOOR DEMO PLAN – AREA C	16028001	78648	43
AD121D	PARTIAL SECOND FLOOR DEMO PLAN – AREA D	16028002	78649	44
AD121F	PARTIAL SECOND FLOOR DEMO PLAN – AREA F	16028003	78650	45
AD121J	PARTIAL SECOND FLOOR DEMO PLAN – AREA J	16028004	78651	46
AD121M	PARTIAL SECOND FLOOR DEMO PLAN – AREA M	16028005	78652	47
AD121N	PARTIAL SECOND FLOOR DEMO PLAN – AREA N	16028006	78653	48
AD121Q	PARTIAL SECOND FLOOR DEMO PLAN – AREA Q	16028007	78654	49
AD125A	PARTIAL 2ND FLOOR MEZZ DEMO PLAN – AREA A	16028008	78655	50
AD125D	PARTIAL 2ND FLOOR MEZZ DEMO PLAN – AREA D	16028009	78656	51
AD125F	PARTIAL 2ND FLOOR MEZZ DEMO PLAN – AREA F	16028010	78657	52
AD125J	PARTIAL 2ND FLOOR MEZZ DEMO PLAN – AREA J	16028011	78658	53
AD131A	PARTIAL THIRD FLOOR DEMO PLAN – AREA A	16028012	78659	54
AD131B	PARTIAL THIRD FLOOR DEMO PLAN – AREA B	16028013	78660	55
AD131C	PARTIAL THIRD FLOOR DEMO PLAN – AREA C	16028014	78661	56
1 AD141A	PARTIAL FOURTH FLOOR DEMO PLAN – AREA A	16028015	78662	57
AD141B	PARTIAL FOURTH FLOOR DEMO PLAN – AREA B	16028016	78663	58
AD141C	PARTIAL FOURTH FLOOR DEMO PLAN – AREA C	16028017	78664	59
AD151A	PARTIAL FIFTH FLOOR DEMO PLAN – AREA A	16028018	78665	60
AD151B	PARTIAL FIFTH FLOOR DEMO PLAN – AREA B	16028019	78666	61
AD151C	PARTIAL FIFTH FLOOR DEMO PLAN – AREA C	16028020	78667	62
AD161A	PARTIAL SIXTH FLOOR DEMO PLAN – AREA A	16028021	78668	63
AD161B	PARTIAL SIXTH FLOOR DEMO PLAN – AREA B	16028022	78669	64
AD161C	PARTIAL SIXTH FLOOR DEMO PLAN – AREA C	16028023	78670	65
AD171A	SEVENTH & EIGHTH FLOOR DEMOLTION PLAN	16028024	78671	66
A-111A	PARTIAL FIRST FLOOR PLAN – AREA A	16028025	78672	67
A-111B	PARTIAL FIRST FLOOR PLAN – AREA B	16028026	78673	68
A-111C	PARTIAL FIRST FLOOR PLAN – AREA C	16028027	78674	69
A-111D	PARTIAL FIRST FLOOR PLAN – AREA D	16028028	78675	70
A-111E	PARTIAL FIRST FLOOR PLAN – AREA E	16028029	78676	71
A-111F	PARTIAL FIRST FLOOR PLAN – AREA F	16028030	78677	72
A-111G	PARTIAL FIRST FLOOR PLAN – AREA G	16028031	78678	73

FILENAME: DWGLIST VOL 3 A.XLS

DRAWING INDEX VOLUME 3 CONT'D

DWG NO.	DRAWING TITLE	NAVFAC DWG NO.	PW DWG NO.	SHEET NO.
A-111H	PARTIAL FIRST FLOOR PLAN – AREA H	16028032	78679	74
A-111J	PARTIAL FIRST FLOOR PLAN – AREA J	16028033	78680	75
A-111K	PARTIAL FIRST FLOOR PLAN – AREA K	16028034	78681	76
A-111L	PARTIAL FIRST FLOOR PLAN – AREA L	16028035	78682	77
A-111M	PARTIAL FIRST FLOOR PLAN – AREA M	16028036	78683	78
A-111N	PARTIAL FIRST FLOOR PLAN – AREA N	16028037	78684	79
A-111P	PARTIAL FIRST FLOOR PLAN – AREA P	16028038	78685	80
A-111Q	PARTIAL FIRST FLOOR PLAN – AREA Q	16028039	78686	81
A-115A	PARTIAL MEZZANINE FLOOR PLAN – AREA A	16028040	78687	82
A-115B	PARTIAL MEZZANINE FLOOR PLAN – AREA B	16028041	78688	83
A-115C	PARTIAL MEZZANINE FLOOR PLAN – AREA C	16028042	78689	84
A-115D	PARTIAL MEZZANINE FLOOR PLAN – AREA D	16028043	78690	85
A-115F	PARTIAL MEZZANINE FLOOR PLAN – AREA F	16028044	78691	86
A-115G	PARTIAL MEZZANINE FLOOR PLAN – AREA G	16028045	78692	87
A-115K	PARTIAL MEZZANINE FLOOR PLAN – AREA K	16028046	78693	88
A-115M	PARTIAL MEZZANINE FLOOR PLAN – AREA M	16028047	78694	89
A-115N	PARTIAL MEZZANINE FLOOR PLAN – AREA N	16028048	78695	90
A-116D	PARTIAL MEZZANINE REFLECTED CEILING PLAN – AREA D	16028049	78696	91
A-116G	PARTIAL MEZZANINE REFLECTED CEILING PLAN – AREA G	16028050	78697	92
A-116K	PARTIAL MEZZANINE REFLECTED CEILING PLAN – AREA K	16028051	78698	93
A-121A	PARTIAL SECOND FLOOR PLAN – AREA A	16028052	78699	94
A-121B	PARTIAL SECOND FLOOR PLAN – AREA B	16028053	78700	95
A-121C	PARTIAL SECOND FLOOR PLAN – AREA C	16028054	78701	96
A-121D	PARTIAL SECOND FLOOR PLAN – AREA D	16028055	78702	97
A-121F	PARTIAL SECOND FLOOR PLAN – AREA F	16028056	78703	98
A-121J	PARTIAL SECOND FLOOR PLAN – AREA J	16028057	78704	99
A-121M	PARTIAL SECOND FLOOR PLAN – AREA M	16028058	78705	100
A-121N	PARTIAL SECOND FLOOR PLAN – AREA N	16028059	78706	101
A-121Q	PARTIAL SECOND FLOOR PLAN – AREA Q	16028060	78707	102
A-122A	PARTIAL 2ND FLOOR REFLECTED CEILING PLAN – AREA A	16028061	78708	103
A-122D	PARTIAL 2ND FLOOR REFLECTED CEILING PLAN – AREA D	16028062	78709	104
A-122Q	PARTIAL 2ND FLOOR REFLECTED CEILING PLAN – AREA Q	16028063	78710	105
A-125A	PARTIAL SECOND FLOOR MEZZ FLOOR PLAN – AREA A	16028064	78711	106
A-125D	PARTIAL SECOND FLOOR MEZZ FLOOR PLAN – AREA D	16028065	78712	107
A-125F	PARTIAL SECOND FLOOR MEZZ FLOOR PLAN – AREA F	16028066	78713	108
A-125J	PARTIAL SECOND FLOOR MEZZ FLOOR PLAN – AREA J	16028067	78714	109
A-126A	PRT 2ND FLR MEZZ REFLECTED CEILING – AREA A	16028068	78715	110
A-126D	PRT 2ND FLR MEZZ REFLECTED CEILING – AREA D	16028069	78716	111
A-131A	PARTIAL THIRD FLOOR PLAN – AREA A	16028070	78717	112
A-131B	PARTIAL THIRD FLOOR PLAN – AREA B	16028071	78718	113
A-131C	PARTIAL THIRD FLOOR PLAN – AREA C	16028072	78719	114
A-141A	PARTIAL FOURTH FLOOR PLAN – AREA A	16028073	78720	115
A-141B	PARTIAL FOURTH FLOOR PLAN – AREA B	16028074	78721	116
A-141C	PARTIAL FOURTH FLOOR PLAN – AREA C	16028075	78722	117
A-142C	PARTIAL 4TH FLOOR REFLECTED CEILING PLAN – AREA C	16028076	78723	118
A-151A	PARTIAL FIFTH FLOOR PLAN – AREA A	16028077	78724	119
A-151B	PARTIAL FIFTH FLOOR PLAN – AREA B	16028078	78725	120
A-151C	PARTIAL FIFTH FLOOR PLAN – AREA C	16028079	78726	121
A-161A	PARTIAL SIXTH FLOOR PLAN – AREA A	16028080	78727	122
A-161B	PARTIAL SIXTH FLOOR PLAN – AREA B	16028081	78728	123
A-161C	PARTIAL SIXTH FLOOR PLAN – AREA C	16028082	78729	124
A-171A	SEVENTH FLOOR PLAN	16028083	78730	125
A-195A	PARTIAL ROOF PLAN – AREA A	16028084	78731	126
A-195B	PARTIAL ROOF PLAN – AREA B	16028085	78732	127
A-195C	PARTIAL ROOF PLAN – AREA C	16028086	78733	128
A-195D	PARTIAL ROOF PLAN – AREA D	16028087	78734	129
A-195E	PARTIAL ROOF PLAN – AREA E	16028088	78735	130
A-195F	PARTIAL ROOF PLAN – AREA F	16028089	78736	131
A-195G	PARTIAL ROOF PLAN – AREA G	16028090	78737	132
A-195H	PARTIAL ROOF PLAN – AREA H	16028091	78738	133
A-195J	PARTIAL ROOF PLAN – AREA J	16028092	78739	134
A-195K	PARTIAL ROOF PLAN – AREA K	16028093	78740	135
A-195L	PARTIAL ROOF PLAN – AREA L	16028094	78741	136
A-195N	PARTIAL ROOF PLAN – AREA M	16028095	78742	137
A-195N	PARTIAL ROOF PLAN – AREA N	16028096	78743	138
A-195P	PARTIAL ROOF PLAN – AREA P	16028097	78744	139
A-195Q	PARTIAL ROOF PLAN – AREA Q	16028098	78745	140
A-201	NORTH ELEVATION	16028099	78746	141
A-202	WEST ELEVATION	16028100	78747	142
A-203	EAST ELEVATION	16028101	78748	143
A-204	EAST AND WEST ELEVATIONS – SOUTH EXTENSION	16028102	78749	144
A-205	SOUTH ELEVATION DEMOLITION	16028103	78750	145
A-206	SOUTH ELEVATION	16028104	78751	146
A-207	ENLARGED WEST LEAN-TO ELEVATIONS	16028105	78752	147

FILENAME: DWGLIST VOL 3 B.XLS

DRAWING INDEX VOLUME 3 CONT'D

DWG NO.	DRAWING TITLE	NAVFAC DWG NO.	PW DWG NO.	SHEET NO.
A-208	ENLARGED LEAN-TO ELEVATIONS	16028106	78753	148
A-301	SECTION – NORTH BUILDING TRANSVERSE	16028107	78754	149
A-302	SECTION – SOUTH BUILDING TRANSVERSE	16028108	78755	150
A-303	SECTION – SOUTH BUILDING LONGITUDINAL	16028109	78756	151
A-304	WALL SECTIONS – NORTH BUILDING	16028110	78757	152
A-305	WALL SECTIONS – SOUTH EXTENSION	16028111	78758	153
A-306	WALL SECTIONS	16028112	78759	154
A-307	WALL SECTIONS	16028113	78760	155
A-308	WALL SECTIONS – SOUTH EXTENSION	16028114	78761	156
A-309	WALL SECTIONS – SOUTH EXTENSION	16028115	78762	157
A-310	WALL SECTIONS	16028116	78763	158
A-321	SECTION – DEMOLISHED PERISCOPE TOWER	16028117	78764	159
A-401	RESTROOM PLANS & ELEVATIONS	16028118	78765	160
A-402	RESTROOM PLANS & ELEVATIONS	16028119	78766	161
A-403	RESTROOM PLANS & ELEVATIONS	16028120	78767	162
A-404	RESTROOM PLANS & ELEVATIONS	16028121	78768	163
A-405	RESTROOM PLANS & ELEVATIONS	16028122	78769	164
A-406	RESTROOM PLANS & ELEVATIONS	16028123	78770	165
A-407	RESTROOM PLANS & ELEVATIONS	16028124	78771	166
A-408	RESTROOM PLANS & ELEVATIONS	16028125	78772	167
A-409	RESTROOM PLANS & ELEVATIONS	16028126	78773	168
A-410	RESTROOM PLANS & ELEVATIONS	16028127	78774	169
A-411	RESTROOM PLANS & ELEVATIONS	16028128	78775	170
A-412	RESTROOM PLANS & ELEVATIONS	16028129	78776	171
A-413	RESTROOM PLANS & ELEVATIONS	16028130	78777	172
A-414	RESTROOM PLANS & ELEVATIONS	16028131	78778	173
A-415	RESTROOM PLANS & ELEVATIONS	16028132	78779	174
A-416	RESTROOM PLANS & ELEVATIONS	16028133	78780	175
A-417	RESTROOM PLANS & ELEVATIONS	16028134	78781	176
A-418	RESTROOM PLANS & ELEVATIONS	16028135	78782	177
A-419	RESTROOM PLANS & ELEVATIONS	16028136	78783	178
A-420	RESTROOM PLANS & ELEVATIONS	16028137	78784	179
A-421	STAIR PLANS & SECTIONS	16028138	78785	180
A-422	STAIR PLANS & SECTIONS	16028139	78786	181
A-423	STAIR PLANS & SECTIONS	16028140	78787	182
A-424	STAIR PLANS & SECTIONS	16028141	78788	183
A-425	STAIR PLANS & SECTIONS	16028142	78789	184
A-426	STAIR PLANS & SECTIONS	16028143	78790	185
A-427	STAIR PLANS & SECTIONS	16028144	78791	186
A-428	STAIR PLANS & SECTIONS	16028145	78792	187
A-501	DETAILS – DOOR & MISC	16028146	78793	188
A-502	DETAILS – HANDRAIL, MISC	16028147	78794	189
A-503	DETAILS – BRBS	16028148	78795	190
A-504	DETAILS – SEISMIC JOINT	16028149	78796	191
A-505	DETAILS – SEISMIC JOINT	16028150	78797	192
A-506	DETAILS – EXTERIOR	16028151	78798	193
A-507	DETAILS– GRID D SEISMIC JOINT & MISC	16028152	78799	194
A-508	DETAILS – CURTAINWALL	16028153	78800	195
A-509	DETAILS – EXTERIOR DETAILS	16028154	78801	196
A-510	DETAILS – EXTERIOR SIDING	16028155	78802	197
A-511	DETAILS – EXTERIOR	16028156	78803	198
A-601	WALL TYPES	16028157	78804	199
A-602	FINISH SCHEDULE	16028158	78805	200
A-603	COLOR SCHEDULE	16028159	78806	201
A-604	DOOR SCHEDULE (1 OF 3)	16028160	78807	202
A-605	DOOR SCHEDULE (2 OF 3)	16028161	78808	203
A-606	DOOR SCHEDULE (3 OF 3)	16028162	78809	204
A-607	CURTAIN WALL TYPES	16028163	78810	205
A-608	CURTAIN WALL TYPES	16028164	78811	206
Q-101	OVERALL FIRST FLOOR PLAN	16028165	78812	207
Q-111	PARTIAL FIRST FLOOR PLAN – ZONE 1	16028166	78813	208
Q-111A	ZONE 1 – PARTIAL EQUIPMENT SCHEDULE	16028167	78814	209
Q-111B	ZONE 1 – PARTIAL EQUIPMENT SCHEDULE	16028168	78815	210
Q-111C	ZONE 1 – PARTIAL EQUIPMENT SCHEDULE	16028169	78816	211
Q-112	PARTIAL FIRST FLOOR PLAN – ZONE 2	16028170	78817	212
Q-112A	ZONE 2 – PARTIAL EQUIPMENT SCHEDULE	16028171	78818	213
Q-112B	ZONE 2 – PARTIAL EQUIPMENT SCHEDULE	16028172	78819	214
Q-113	PARTIAL FIRST FLOOR PLAN – ZONE 3	16028173	78820	215
Q-113A	ZONE 3 – PARTIAL EQUIPMENT SCHEDULE	16028174	78821	216
Q-113B	ZONE 3 – PARTIAL EQUIPMENT SCHEDULE	16028175	78822	217
Q-114A	PARTIAL FIRST FLOOR PLAN – ZONE 4A	16028176	78823	218
Q-114B	PARTIAL FIRST FLOOR PLAN – ZONE 4B	16028177	78824	219
Q-114C	ZONE 4 – PARTIAL EQUIPMENT SCHEDULE	16028178	78825	220

FILENAME: DWGLIST VOL 3 C.XLS

1/16/2015

SYM	DESCRIPTION	DATE	APPR
1	AMENDMENT 0003	3/2015	BAL

NAVFAC

BRADLEY A. LENTZ STATE OF WASHINGTON 47807 REGISTERED PROFESSIONAL ENGINEER
3/11/2015 SEAL

notkin mechanical engineers
www.notkin.com
telephone: 206.448.1911
facsimile: 206.448.9485
2301 5th Avenue, Suite 401
Seattle, WA 98121

Contact: Bradley A. Lentz, P.E.
notkin#: 213038
A/E INFO

APPROVED
FOR COMMANDER NAVFAC
ACTIVITY
SATISFACTORY TO DATE
DES BL DRW IR CHK TF
PM/DM
BRANCH MANAGER
CHIEF ENG/ARCH
FIRE PROTECTION

DEPARTMENT OF THE NAVY
NAVAL FACILITIES ENGINEERING COMMAND
NAVAL FACILITIES ENGINEERING COMMAND ~ NORTHWEST
NAVAL STATION – SILVERDALE, WASHINGTON
IPT NAVAL BASE KITSAP – PSNS & IMF
BREMERTON, WA
SPECIAL PROJECT RM 09-1471
REPAIR INSIDE MACHINE SHOP, BUILDING 431
DRAWING INDEX VOLUME 3

SCALE: AS NOTED
EPROJECT NO.:
CONSTR. CONTR. NO.
NAVFAC DRAWING NO./PWD NO.
16027438/78085
SHEET 5 OF 207
G-005

DRAWFORM REVISION: 10 MARCH 2009

FILE NAME: L:\PROJECTS\213038 – Navy – 11– D007 PSNS FY14 B431 Seismic Upgrade\Drawings\78085_G-005.dwg LAYOUT NAME: G-005 PLOTTED: Wednesday, March 18, 2015 – 11:05am USER: kh

DRAWING INDEX VOLUME 3

DWG NO.	DRAWING TITLE	NAVFAC DWG NO.	PW DWG NO.	SHEET NO.
G-031	TITLE SHEET, LOCATION MAP	16027959	78606	1
G-032	DRAWING INDEX VOLUME 3	16027960	78607	2
G-033	DRAWING INDEX VOLUME 3	16027961	78608	3
A-001	GENERAL NOTES, SYMBOLS, AND ABBREVIATIONS	16027962	78609	4
A-051	FIRST FLOOR EGRESS PLAN – SOUTH	16027963	78610	5
A-052	FIRST FLOOR EGRESS PLAN – NORTH	16027964	78611	6
A-053	MEZZANINE EGRESS PLAN – SOUTH	16027965	78612	7
A-054	MEZZANINE EGRESS PLAN – NORTH	16027966	78613	8
A-055	LEVEL 2 & 2 M EGRESS PLAN – SOUTH	16027967	78614	9
A-056	SECOND FLOOR EGRESS PLAN – NORTH	16027968	78615	10
A-057	THIRD AND FORTH FLOOR EGRESS PLANS	16027969	78616	11
A-058	FIFTH AND SIXTH FLOOR EGRESS PLANS	16027970	78617	12
A-091	OVERALL FIRST FLOOR PLAN	16027971	78618	13
A-092	OVERALL MEZZANINE OVERALL PLAN	16027972	78619	14
A-093	OVERALL SECOND FLOOR PLAN	16027973	78620	15
A-094	OVERALL THIRD, FOURTH, AND FIFTH FLOOR PLANS	16027974	78621	16
A-095	OVERALL SIXTH AND SEVENTH FLOOR PLANS	16027975	78622	17
A-096	OVERALL ROOF PLAN	16027976	78623	18
AD111A	PARTIAL FIRST FLOOR DEMO PLAN – AREA A	16027977	78624	19
AD111B	PARTIAL FIRST FLOOR DEMO PLAN – AREA B	16027978	78625	20
AD111C	PARTIAL FIRST FLOOR DEMO PLAN – AREA C	16027979	78626	21
AD111D	PARTIAL FIRST FLOOR DEMO PLAN – AREA D	16027980	78627	22
AD111F	PARTIAL FIRST FLOOR DEMO PLAN – AREA F	16027981	78628	23
AD111G	PARTIAL FIRST FLOOR DEMO PLAN – AREA G	16027982	78629	24
AD111H	PARTIAL FIRST FLOOR DEMO PLAN – AREA H	16027983	78630	25
AD111J	PARTIAL FIRST FLOOR DEMO PLAN – AREA J	16027984	78631	26
AD111K	PARTIAL FIRST FLOOR DEMO PLAN – AREA K	16027985	78632	27
AD111L	PARTIAL FIRST FLOOR DEMO PLAN – AREA L	16027986	78633	28
AD111M	PARTIAL FIRST FLOOR DEMO PLAN – AREA M	16027987	78634	29
AD111N	PARTIAL FIRST FLOOR DEMO PLAN – AREA N	16027988	78635	30
AD111P	PARTIAL FIRST FLOOR DEMO PLAN – AREA P	16027989	78636	31
AD111Q	PARTIAL FIRST FLOOR DEMO PLAN – AREA Q	16027990	78637	32
AD115A	PARTIAL MEZZANINE DEMO PLAN – AREA A	16027991	78638	33
AD115B	PARTIAL MEZZANINE DEMO PLAN – AREA B	16027992	78639	34
AD115C	PARTIAL MEZZANINE DEMO PLAN – AREA C	16027993	78640	35
AD115D	PARTIAL MEZZANINE DEMO PLAN – AREA D	16027994	78641	36
AD115G	PARTIAL MEZZANINE DEMO PLAN – AREA G	16027995	78642	37
AD115K	PARTIAL MEZZANINE DEMO PLAN – AREA K	16027996	78643	38
AD115M	PARTIAL MEZZANINE DEMO PLAN – AREA M	16027997	78644	39
AD115N	PARTIAL MEZZANINE DEMO PLAN – AREA N	16027998	78645	40
AD121A	PARTIAL SECOND FLOOR DEMO PLAN – AREA A	16027999	78646	41
AD121B	PARTIAL SECOND FLOOR DEMO PLAN – AREA B	16028000	78647	42
AD121C	PARTIAL SECOND FLOOR DEMO PLAN – AREA C	16028001	78648	43
AD121D	PARTIAL SECOND FLOOR DEMO PLAN – AREA D	16028002	78649	44
AD121F	PARTIAL SECOND FLOOR DEMO PLAN – AREA F	16028003	78650	45
AD121J	PARTIAL SECOND FLOOR DEMO PLAN – AREA J	16028004	78651	46
AD121M	PARTIAL SECOND FLOOR DEMO PLAN – AREA M	16028005	78652	47
AD121N	PARTIAL SECOND FLOOR DEMO PLAN – AREA N	16028006	78653	48
AD121Q	PARTIAL SECOND FLOOR DEMO PLAN – AREA Q	16028007	78654	49
AD125A	PARTIAL 2ND FLOOR MEZZ DEMO PLAN – AREA A	16028008	78655	50
AD125D	PARTIAL 2ND FLOOR MEZZ DEMO PLAN – AREA D	16028009	78656	51
AD125F	PARTIAL 2ND FLOOR MEZZ DEMO PLAN – AREA F	16028010	78657	52
AD125J	PARTIAL 2ND FLOOR MEZZ DEMO PLAN – AREA J	16028011	78658	53
AD131A	PARTIAL THIRD FLOOR DEMO PLAN – AREA A	16028012	78659	54
AD131B	PARTIAL THIRD FLOOR DEMO PLAN – AREA B	16028013	78660	55
AD131C	PARTIAL THIRD FLOOR DEMO PLAN – AREA C	16028014	78661	56
1 AD141A	PARTIAL FOURTH FLOOR DEMO PLAN – AREA A	16028015	78662	57
AD141B	PARTIAL FOURTH FLOOR DEMO PLAN – AREA B	16028016	78663	58
AD141C	PARTIAL FOURTH FLOOR DEMO PLAN – AREA C	16028017	78664	59
AD151A	PARTIAL FIFTH FLOOR DEMO PLAN – AREA A	16028018	78665	60
AD151B	PARTIAL FIFTH FLOOR DEMO PLAN – AREA B	16028019	78666	61
AD151C	PARTIAL FIFTH FLOOR DEMO PLAN – AREA C	16028020	78667	62
AD161A	PARTIAL SIXTH FLOOR DEMO PLAN – AREA A	16028021	78668	63
AD161B	PARTIAL SIXTH FLOOR DEMO PLAN – AREA B	16028022	78669	64
AD161C	PARTIAL SIXTH FLOOR DEMO PLAN – AREA C	16028023	78670	65
AD171A	SEVENTH & EIGHTH FLOOR DEMOLTION PLAN	16028024	78671	66
A-111A	PARTIAL FIRST FLOOR PLAN – AREA A	16028025	78672	67
A-111B	PARTIAL FIRST FLOOR PLAN – AREA B	16028026	78673	68
A-111C	PARTIAL FIRST FLOOR PLAN – AREA C	16028027	78674	69
A-111D	PARTIAL FIRST FLOOR PLAN – AREA D	16028028	78675	70
A-111E	PARTIAL FIRST FLOOR PLAN – AREA E	16028029	78676	71
A-111F	PARTIAL FIRST FLOOR PLAN – AREA F	16028030	78677	72
A-111G	PARTIAL FIRST FLOOR PLAN – AREA G	16028031	78678	73

FILENAME: DWGLIST VOL 3 A.XLS

DRAWING INDEX VOLUME 3 CONT'D

DWG NO.	DRAWING TITLE	NAVFAC DWG NO.	PW DWG NO.	SHEET NO.
A-111H	PARTIAL FIRST FLOOR PLAN – AREA H	16028032	78679	74
A-111J	PARTIAL FIRST FLOOR PLAN – AREA J	16028033	78680	75
A-111K	PARTIAL FIRST FLOOR PLAN – AREA K	16028034	78681	76
A-111L	PARTIAL FIRST FLOOR PLAN – AREA L	16028035	78682	77
A-111M	PARTIAL FIRST FLOOR PLAN – AREA M	16028036	78683	78
A-111N	PARTIAL FIRST FLOOR PLAN – AREA N	16028037	78684	79
A-111P	PARTIAL FIRST FLOOR PLAN – AREA P	16028038	78685	80
A-111Q	PARTIAL FIRST FLOOR PLAN – AREA Q	16028039	78686	81
A-115A	PARTIAL MEZZANINE FLOOR PLAN – AREA A	16028040	78687	82
A-115B	PARTIAL MEZZANINE FLOOR PLAN – AREA B	16028041	78688	83
A-115C	PARTIAL MEZZANINE FLOOR PLAN – AREA C	16028042	78689	84
A-115D	PARTIAL MEZZANINE FLOOR PLAN – AREA D	16028043	78690	85
A-115F	PARTIAL MEZZANINE FLOOR PLAN – AREA F	16028044	78691	86
A-115G	PARTIAL MEZZANINE FLOOR PLAN – AREA G	16028045	78692	87
A-115K	PARTIAL MEZZANINE FLOOR PLAN – AREA K	16028046	78693	88
A-115M	PARTIAL MEZZANINE FLOOR PLAN – AREA M	16028047	78694	89
A-115N	PARTIAL MEZZANINE FLOOR PLAN – AREA N	16028048	78695	90
A-116D	PARTIAL MEZZANINE REFLECTED CEILING PLAN – AREA D	16028049	78696	91
A-116G	PARTIAL MEZZANINE REFLECTED CEILING PLAN – AREA G	16028050	78697	92
A-116K	PARTIAL MEZZANINE REFLECTED CEILING PLAN – AREA K	16028051	78698	93
A-121A	PARTIAL SECOND FLOOR PLAN – AREA A	16028052	78699	94
A-121B	PARTIAL SECOND FLOOR PLAN – AREA B	16028053	78700	95
A-121C	PARTIAL SECOND FLOOR PLAN – AREA C	16028054	78701	96
A-121D	PARTIAL SECOND FLOOR PLAN – AREA D	16028055	78702	97
A-121F	PARTIAL SECOND FLOOR PLAN – AREA F	16028056	78703	98
A-121J	PARTIAL SECOND FLOOR PLAN – AREA J	16028057	78704	99
A-121M	PARTIAL SECOND FLOOR PLAN – AREA M	16028058	78705	100
A-121N	PARTIAL SECOND FLOOR PLAN – AREA N	16028059	78706	101
A-121Q	PARTIAL SECOND FLOOR PLAN – AREA Q	16028060	78707	102
A-122A	PARTIAL 2ND FLOOR REFLECTED CEILING PLAN – AREA A	16028061	78708	103
A-122D	PARTIAL 2ND FLOOR REFLECTED CEILING PLAN – AREA D	16028062	78709	104
A-122Q	PARTIAL 2ND FLOOR REFLECTED CEILING PLAN – AREA Q	16028063	78710	105
A-125A	PARTIAL SECOND FLOOR MEZZ FLOOR PLAN – AREA A	16028064	78711	106
A-125D	PARTIAL SECOND FLOOR MEZZ FLOOR PLAN – AREA D	16028065	78712	107
A-125F	PARTIAL SECOND FLOOR MEZZ FLOOR PLAN – AREA F	16028066	78713	108
A-125J	PARTIAL SECOND FLOOR MEZZ FLOOR PLAN – AREA J	16028067	78714	109
A-126A	PRT 2ND FLR MEZZ REFLECTED CEILING – AREA A	16028068	78715	110
A-126D	PRT 2ND FLR MEZZ REFLECTED CEILING – AREA D	16028069	78716	111
A-131A	PARTIAL THIRD FLOOR PLAN – AREA A	16028070	78717	112
A-131B	PARTIAL THIRD FLOOR PLAN – AREA B	16028071	78718	113
A-131C	PARTIAL THIRD FLOOR PLAN – AREA C	16028072	78719	114
A-141A	PARTIAL FOURTH FLOOR PLAN – AREA A	16028073	78720	115
A-141B	PARTIAL FOURTH FLOOR PLAN – AREA B	16028074	78721	116
A-141C	PARTIAL FOURTH FLOOR PLAN – AREA C	16028075	78722	117
A-142C	PARTIAL 4TH FLOOR REFLECTED CEILING PLAN – AREA C	16028076	78723	118
A-151A	PARTIAL FIFTH FLOOR PLAN – AREA A	16028077	78724	119
A-151B	PARTIAL FIFTH FLOOR PLAN – AREA B	16028078	78725	120
A-151C	PARTIAL FIFTH FLOOR PLAN – AREA C	16028079	78726	121
A-161A	PARTIAL SIXTH FLOOR PLAN – AREA A	16028080	78727	122
A-161B	PARTIAL SIXTH FLOOR PLAN – AREA B	16028081	78728	123
A-161C	PARTIAL SIXTH FLOOR PLAN – AREA C	16028082	78729	124
A-171A	SEVENTH FLOOR PLAN	16028083	78730	125
A-195A	PARTIAL ROOF PLAN – AREA A	16028084	78731	126
A-195B	PARTIAL ROOF PLAN – AREA B	16028085	78732	127
A-195C	PARTIAL ROOF PLAN – AREA C	16028086	78733	128
A-195D	PARTIAL ROOF PLAN – AREA D	16028087	78734	129
A-195E	PARTIAL ROOF PLAN – AREA E	16028088	78735	130
A-195F	PARTIAL ROOF PLAN – AREA F	16028089	78736	131
A-195G	PARTIAL ROOF PLAN – AREA G	16028090	78737	132
A-195H	PARTIAL ROOF PLAN – AREA H	16028091	78738	133
A-195J	PARTIAL ROOF PLAN – AREA J	16028092	78739	134
A-195K	PARTIAL ROOF PLAN – AREA K	16028093	78740	135
A-195L	PARTIAL ROOF PLAN – AREA L	16028094	78741	136
A-195N	PARTIAL ROOF PLAN – AREA M	16028095	78742	137
A-195N	PARTIAL ROOF PLAN – AREA N	16028096	78743	138
A-195P	PARTIAL ROOF PLAN – AREA P	16028097	78744	139
A-195Q	PARTIAL ROOF PLAN – AREA Q	16028098	78745	140
A-201	NORTH ELEVATION	16028099	78746	141
A-202	WEST ELEVATION	16028100	78747	142
A-203	EAST ELEVATION	16028101	78748	143
A-204	EAST AND WEST ELEVATIONS – SOUTH EXTENSION	16028102	78749	144
A-205	SOUTH ELEVATION DEMOLITION	16028103	78750	145
A-206	SOUTH ELEVATION	16028104	78751	146
A-207	ENLARGED WEST LEAN-TO ELEVATIONS	16028105	78752	147

FILENAME: DWGLIST VOL 3 B.XLS

DRAWING INDEX VOLUME 3 CONT'D

DWG NO.	DRAWING TITLE	NAVFAC DWG NO.	PW DWG NO.	SHEET NO.
A-208	ENLARGED LEAN-TO ELEVATIONS	16028106	78753	148
A-301	SECTION – NORTH BUILDING TRANSVERSE	16028107	78754	149
A-302	SECTION – SOUTH BUILDING TRANSVERSE	16028108	78755	150
A-303	SECTION – SOUTH BUILDING LONGITUDINAL	16028109	78756	151
A-304	WALL SECTIONS – NORTH BUILDING	16028110	78757	152
A-305	WALL SECTIONS – SOUTH EXTENSION	16028111	78758	153
A-306	WALL SECTIONS	16028112	78759	154
A-307	WALL SECTIONS	16028113	78760	155
A-308	WALL SECTIONS – SOUTH EXTENSION	16028114	78761	156
A-309	WALL SECTIONS – SOUTH EXTENSION	16028115	78762	157
A-310	WALL SECTIONS	16028116	78763	158
A-321	SECTION – DEMOLISHED PERISCOPE TOWER	16028117	78764	159
A-401	RESTROOM PLANS & ELEVATIONS	16028118	78765	160
A-402	RESTROOM PLANS & ELEVATIONS	16028119	78766	161
A-403	RESTROOM PLANS & ELEVATIONS	16028120	78767	162
A-404	RESTROOM PLANS & ELEVATIONS	16028121	78768	163
A-405	RESTROOM PLANS & ELEVATIONS	16028122	78769	164
A-406	RESTROOM PLANS & ELEVATIONS	16028123	78770	165
A-407	RESTROOM PLANS & ELEVATIONS	16028124	78771	166
A-408	RESTROOM PLANS & ELEVATIONS	16028125	78772	167
A-409	RESTROOM PLANS & ELEVATIONS	16028126	78773	168
A-410	RESTROOM PLANS & ELEVATIONS	16028127	78774	169
A-411	RESTROOM PLANS & ELEVATIONS	16028128	78775	170
A-412	RESTROOM PLANS & ELEVATIONS	16028129	78776	171
A-413	RESTROOM PLANS & ELEVATIONS	16028130	78777	172
A-414	RESTROOM PLANS & ELEVATIONS	16028131	78778	173
A-415	RESTROOM PLANS & ELEVATIONS	16028132	78779	174
A-416	RESTROOM PLANS & ELEVATIONS	16028133	78780	175
A-417	RESTROOM PLANS & ELEVATIONS	16028134	78781	176
A-418	RESTROOM PLANS & ELEVATIONS	16028135	78782	177
A-419	RESTROOM PLANS & ELEVATIONS	16028136	78783	178
A-420	RESTROOM PLANS & ELEVATIONS	16028137	78784	179
A-421	STAIR PLANS & SECTIONS	16028138	78785	180
A-422	STAIR PLANS & SECTIONS	16028139	78786	181
A-423	STAIR PLANS & SECTIONS	16028140	78787	182
A-424	STAIR PLANS & SECTIONS	16028141	78788	183
A-425	STAIR PLANS & SECTIONS	16028142	78789	184
A-426	STAIR PLANS & SECTIONS	16028143	78790	185
A-427	STAIR PLANS & SECTIONS	16028144	78791	186
A-428	STAIR PLANS & SECTIONS	16028145	78792	187
A-501	DETAILS – DOOR & MISC	16028146	78793	188
A-502	DETAILS – HANDRAIL, MISC	16028147	78794	189
A-503	DETAILS – BRBS	16028148	78795	190
A-504	DETAILS – SEISMIC JOINT	16028149	78796	191
A-505	DETAILS – SEISMIC JOINT	16028150	78797	192
A-506	DETAILS – EXTERIOR	16028151	78798	193
A-507	DETAILS– GRID D SEISMIC JOINT & MISC	16028152	78799	194
A-508	DETAILS – CURTAINWALL	16028153	78800	195
A-509	DETAILS – EXTERIOR DETAILS	16028154	78801	196
A-510	DETAILS – EXTERIOR SIDING	16028155	78802	197
A-511	DETAILS – EXTERIOR	16028156	78803	198
A-601	WALL TYPES	16028157	78804	199
A-602	FINISH SCHEDULE	16028158	78805	200
A-603	COLOR SCHEDULE	16028159	78806	201
A-604	DOOR SCHEDULE (1 OF 3)	16028160	78807	202
A-605	DOOR SCHEDULE (2 OF 3)	16028161	78808	203
A-606	DOOR SCHEDULE (3 OF 3)	16028162	78809	204
A-607	CURTAIN WALL TYPES	16028163	78810	205
A-608	CURTAIN WALL TYPES	16028164	78811	206
Q-101	OVERALL FIRST FLOOR PLAN	16028165	78812	207
Q-111	PARTIAL FIRST FLOOR PLAN – ZONE 1	16028166	78813	208
Q-111A	ZONE 1 – PARTIAL EQUIPMENT SCHEDULE	16028167	78814	209
Q-111B	ZONE 1 – PARTIAL EQUIPMENT SCHEDULE	16028168	78815	210
Q-111C	ZONE 1 – PARTIAL EQUIPMENT SCHEDULE	16028169	78816	211
Q-112	PARTIAL FIRST FLOOR PLAN – ZONE 2	16028170	78817	212
Q-112A	ZONE 2 – PARTIAL EQUIPMENT SCHEDULE	16028171	78818	213
Q-112B	ZONE 2 – PARTIAL EQUIPMENT SCHEDULE	16028172	78819	214
Q-113	PARTIAL FIRST FLOOR PLAN – ZONE 3	16028173	78820	215
Q-113A	ZONE 3 – PARTIAL EQUIPMENT SCHEDULE	16028174	78821	216
Q-113B	ZONE 3 – PARTIAL EQUIPMENT SCHEDULE	16028175	78822	217
Q-114A	PARTIAL FIRST FLOOR PLAN – ZONE 4A	16028176	78823	218
Q-114B	PARTIAL FIRST FLOOR PLAN – ZONE 4B	16028177	78824	219
Q-114C	ZONE 4 – PARTIAL EQUIPMENT SCHEDULE	16028178	78825	220

FILENAME: DWGLIST VOL 3 C.XLS
1/16/2015

SYM	DESCRIPTION	DATE	APPR
1	AMENDMENT 0003	3/2015	BAL

NAVFAC

BRADLEY A. LENTZ, STATE OF WASHINGTON, 47807, REGISTERED PROFESSIONAL ENGINEER
3/11/2015 SEAL

notkin mechanical engineers
www.notkin.com
telephone: 206.448.1911
facsimile: 206.448.9485
2301 5th Avenue, Suite 401
Seattle, WA 98121

Contact: Bradley A. Lentz, P.E.
notkin#: 213038
A/E INFO

APPROVED
FOR COMMANDER NAVFAC
ACTIVITY
SATISFACTORY TO DATE
DES BL DRW IR CHK TF
PM/DM
BRANCH MANAGER
CHIEF ENG/ARCH
FIRE PROTECTION

DEPARTMENT OF THE NAVY
NAVAL FACILITIES ENGINEERING COMMAND
NAVAL FACILITIES ENGINEERING COMMAND ~ NORTHWEST
NAVAL STATION – SILVERDALE, WASHINGTON
NAVAL BASE KITSAP – PSNS & IMF
BREMERTON, WA

SPECIAL PROJECT RM 09-1471
REPAIR INSIDE MACHINE SHOP, BUILDING 431

DRAWING INDEX VOLUME 3

SCALE: AS NOTED
EPROJECT NO.:
CONSTR. CONTR. NO.
NAVFAC DRAWING NO./PWD NO.
16027960/78607
SHEET 2 OF 290

G-032

DRAWFORM REVISION: 10 MARCH 2009

FILE NAME: C:\Users\kh\appdata\local\temp\AcPublish_4376\78607_G-032.dwg LAYOUT NAME: G-032 PLOTTED: Wednesday, March 18, 2015 - 11:06am USER: kh

STRUCTURAL NOTES (CONT)

MICROPILES

DESCRIPTION: MICROPILES ARE SMALL–DIAMETER PILES CONSTRUCTED BY DRILLING A HOLE, PLACING REINFORCEMENT, AND GROUTING THE HOLE. REINFORCEMENT GENERALLY CONSISTS IF HIGH–STRENGTH STEEL PIPE WITH A STEEL REINFORCING BAR PLACED IN THE CENTER OF THE PILE.

DESIGN: MICROPILES SHALL BE DESIGNED BY THE CONTRACTOR FOR THE UNFACTORED LOADS INDICATED ON THIS SHEET. THE MICROPILES SHALL BE DESIGNED BY A LICENSED PROFESSIONAL ENGINEER. THE CONTRACTOR IS RESPONSIBLE FOR FURNISHING OF ALL DESIGN, MATERIALS, PRODUCTS, ACCESSORIES, TOOLS, EQUIPMENT, SERVICES, TRANSPORTATION, LABOR AND SUPERVISION, AND MANUFACTURING TECHNIQUES REQUIRED FOR DESIGN, INSTALLATION AND TESTING OF MICROPILES AND MICROPILE TOP ATTACHMENTS FOR THIS PROJECT.

THE CONTRACTOR SHALL SELECT THE MICROPILE TYPE, SIZE (6" MIN OUTSIDE DIA.), MICROPILE TOP ATTACHMENT, INSTALLATION MEANS AND METHODS, SHALL ESTIMATE THE GROUND TO GROUT BOND VALUE, AND SHALL DETERMINE THE REQUIRED GROUT BOND LENGTH AND FINAL MICROPILE DIAMETER. THE MICROPILE LOAD CAPACITIES SHALL BE VERIFIED BY VERIFICATION AND PROOF LOAD TESTING, AND SHALL MEET THE TEST ACCEPTANCE CRITERIA IN ACCORDANCE WITH THE SPECIFICATIONS.

MATERIALS: MATERIAL REQUIREMENTS SHALL BE ESTABLISHED BY THE LICENSED PROFESSIONAL ENGINEER RESPONSIBLE FOR THE PILE DESIGN IN ACCORDANCE WITH THE SPECIFICATIONS.

LOAD TESTING: THE FOLLOWING GENERAL REQUIREMENTS ARE APPLICABLE TO LOAD TESTING:

1. ALL LOAD TESTING SHALL BE PERFORMED IN TENSION AND SHALL BE PERFORMED IN ACCORDANCE WITH ASTM D3689.
2. ALL TEST MICROPILES SHALL BE INSTALLED BY THE SAME METHODS, PERSONNEL, MATERIAL AND EQUIPMENT AS THE PRODUCTION MICROPILES. CHANGES IN METHODS, PERSONNEL, MATERIALS AND EQUIPMENT MAY REQUIRE ADDITIIONAL VERIFICATION TESTING AS DETERMINED BY THE CONTRACTING OFFICER.
3. PERFORM TESTS UNDER THE SUPERVISION OF A REGISTERED ENGINEER PROVIDED BY THE CONTRACTOR AND IN THE PRESENCE OF THE CONTRACTING OFFICER. SECURES CONTRACTING OFFICER APPROVAL OF THE TEST PRIOR TO COMMENCEMENT OF WORK.
4. APPLY LOAD IN CONCENTRIC MANNER WITH MAGNITUDE OF LOAD ACCURATELY DETERMINED AND CONTROLLED.
5. LATERALLY SUPPORT THE TOP OF MICROPILE DURING ENTIRE LOAD TEST.
6. WHILE COMPLETED PRODUCTION MICROPILES MAY BE USED AS PART OF THE REACTION FRAME FOR PROOF LOAD TESTING, NO REACTION BEARING ELEMENTS OF THE LOAD TEST FRAME FOR PROOF LOAD TESTING OF MICROPILES SHALL BEAR ON EXISTING FOUNDATIONS OR OTHER NEW OR EXISTING FOUNDATION ELEMENTS.
7. SUBMIT TEST REPORTS DIRECTLY TO THE CONTRACTING OFFICER.

TESTING EQUIPMENT AND DATA RECORDING:TESTING EQUIPMENT SHALL INCLUDE DIAL GAUGES, DIAL GAUGE SUPPORT, JACK AND PRESSURE GAUGE, ELECTRONIC LOAD CELL, AND A REACTION FRAME. THE LOAD CELL IS REQUIRED ONLY FOR THE CREEP TEST PORTION OF THE PROOF TEST. THE CONTRACTOR SHALL PROVIDE A DESCRIPTION OF TEST SETUP AND JACK, PRESSURE GAUGE AND LOAD CELL CALIBRATION CURVES IN ACCORDANCE WITH SPECIFICATION SECTION 31 62 16.17. ADDITIONALLY, THE CONTRACTOR SHALL NOT USE TEST JACKS, PRESSURE GAUGES AND MASTER PRESSURE GAUGES, AND ELECTRONIC LOAD CELLS GREATER THAN 90 CALENDAR DAYS PAST THEIR MOST RECENT CALIBRATION DATE, UNTIL SUCH ITEMS ARE RECALIBRATED BY AN INDEPENDENT TESTING LABORATORY.

THE CONTRACTOR SHALL DESIGN THE TESTING REACTION FRAME TO BE SUFFICIENTLY RIGID AND OF ADEQUATE DIMENSIONS SUCH THAT EXCESSIVE DEFORMATION OF THE TESTING EQUIPMENT DOES NOT OCCUR. THE CONTRACTOR SHALL ALIGN THE JACK, BEARING PLATES, AND STRESSING ANCHORAGE SUCH THAT UNLOADING AND REPOSITIONING OF THE EQUIPMENT WILL NOT BE REQUIRED DURING THE TEST.

THE CONTRACTOR SHALL APPLY AND MEASURE THE TEST LOAD WITH A HYDRAULIC JACK AND PRESSURE GAUGE. THE PRESSURE GAUGE SHALL BE GRADUATED IN 75 PSI INCREMENTS OR LESS. THE JACK AND PRESSURE GAUGE SHALL HAVE A PRESSURE RANGE NOT EXCEEDING TWICE THE ANTICIPATED MAXIMUM TEST PRESSURE. JACK RAM TRAVEL SHALL BE SUFFICIENT TO ALLOW THE TEST TO BE DONE WITHOUT RESETTING THE EQUIPMENT. THE CONTRACTOR SHALL MONITOR THE CREEP TEST LOAD HOLD DURING PROOF TESTS WITH BOTH THE PRESSURE GAUGE AND THE ELECTRONIC LOAD CELL. THE CONTRACTOR SHALL USE THE LOAD CELL TO ACCURATELY MAINTAIN A CONSTANT LOAD HOLD DURING THE CREEP TEST LOAD HOLD INCREMENT OF THE PROOF TEST.

THE CONTRACTOR SHALL MEASURE THE MICROPILE TOP MOVEMENT WITH A DIAL GAUGE CAPABLE OF MEASURING TO 1 MIL (0.001 INCH). THE DIAL GAUGE SHALL HAVE A TRAVEL SUFFICIENT TO ALLOW THE TEST TO BE DONE WITHOUT HAVING TO RESET THE GAUGE. THE CONTRACTOR SHALL VISUALLY ALIGN THE GAUGE TO BE PARALLEL WITH THE AXIS OF THE MICROPILE AND SUPPORT THE GAUGE INDEPENDENTLY FROM THE JACK, MICROPILE OR REACTION FRAME. THE CONTRACTOR SHALL USE TWO DIAL GAUGES WHEN THE TEST SETUP REQUIRES REACTION AGAINST THE GROUND OR SINGLE REACTION MICROPILES ON EACH SIDE OF THE TEST MICROPILE.

VERIFICATION TEST LOADING SCHEDULE: PRODUCTION MICROPILES DESIGNATED FOR VERIFICATION TESTING SHALL BE TENSION VERIFICATION TESTED TO A MAXIMUM TEST LOAD OF 300 KIPS (2.0 TIMES THE DESIGN CAPACITY). THE THREADBAR SHALL BE UPSIZED FOR THE VERIFICATION TESTS SUCH THAT THE APPLIED LOAD SHOULD NOT EXCEED 80 PERCENT OF THE STEEL ULTIMATE STRENGTH. VERIFICATION TESTS SHALL BE CONDUCTED BY INCREMENTALLY LOADING THE MICROPILE IN ACCORDANCE WITH THE FOLLOWING SCHEDULE:

VERIFICATION LOAD TEST SCHEDULE

LOAD	HOLD TIME
AL	1 MINUTE
37.5 KIPS	1 MINUTE
75.0 KIPS	1 MINUTE
112.5 KIPS	1 MINUTE
150.0 KIPS	1 MINUTE
187.5 KIPS	1 MINUTE
225 KIPS	1 MINUTE
262.5 KIPS	1 MINUTE
300 KIPS	60 MINUTE (CREEP)
262.5 KIPS	1 MINUTE
225 KIPS	1 MINUTE
187.5 KIPS	1 MINUTE
150.0 KIPS	1 MINUTE
112.5 KIPS	1 MINUTE
75.0 KIPS	1 MINUTE
37.5 KIPS	1 MINUTE
AL	1 MINUTE

AL = ALIGNMENT LOAD

MOVEMENTS DURING THE CREEP PORTION OF THE TEST SHALL BE MEASURED AND RECORDED AT 1, 2, 3, 4, 5, 6, 10, 20, 30, 50, AND 60 MINUTES.

ACCEPTANCE CRITERIA: AT LEAST TWO SUCCESSFUL VERIFICATION TESTS ARE REQUIRED FOR EACH INSTALLATION METHOD AND EACH SOIL TYPE FOR ACCEPTANCE. A SUCCESSFUL VERIFICATION TEST COMPLIES WITH THE FOLLOWING:

1. THE VERTICAL MOVEMENT AT THE TOP OF THE MICROPILE, RELATIVE TO THE POSITION OF THE TOP OF THE MICROPILE PRIOR TO TESTING, SHALL NOT EXCEED 3/4" AT THE 150 KIP LOAD INCREMENT. (1)

2. A CREEP RATE LESS THAN 0.08 INCHES PER LOG CYCLE OF TIME BETWEEN THE 6 AND 60 MINUTE READINGS IS OBSERVED DURING CREEP TESTING, AND THE RATE IS LINEAR OR DECREASING THROUGHOUT THE CREEP TEST LOAD HOLD PERIOD.

3. A PULLOUT FAILURE DOES NOT OCCUR DURING TESTING. PULLOUT FAILURE IS DEFINED AS THE LOAD AT WHICH ATTEMPTS TO INCREASE THE TEST LOAD SIMPLY RESULT IN CONTINUED PULLOUT MOVEMENT OF THE MICROPILE.

PROOF TEST LOADING SCHEDULE: TEST MICROPILES DESIGNATED FOR PROOF TESTING SHALL BE TENSION PROOF LOAD TESTED TO A MAXIMUM TEST LOAD OF 225 KIPS (1.50 TIMES THE MICROPILE DESIGN CAPACITY). PROOF TESTS SHALL BE CONDUCTED BY INCREMENTALLY LOADING THE MICROPILE IN ACCORDANCE WITH THE FOLLOWING SCHEDULE:

PROOF LOAD TEST SCHEDULE

LOAD	HOLD TIME
AL	1 MINUTE
37.5 KIPS	1 MINUTE
75.0 KIPS	1 MINUTE
112.5 KIPS	1 MINUTE
150.0 KIPS	1 MINUTE
187.5 KIPS	1 MINUTE
225 KIPS	10 OR 60 MINUTE
AL	1 MINUTE

AL = ALIGNMENT LOAD

DEPENDING ON PERFORMANCE, EITHER A 10 MINUTE OR 60 MINUTE CREEP TEST SHALL BE PERFORMED AT THE 225 KIP MAXIMUM TEST LOAD. WHERE THE MICROPILE TOP MOVEMENT BETWEEN 1 AND 10 MINUTES EXCEEDS 0.03125 INCH, THE MAXIMUM TEST LOAD SHALL BE MAINTAINED AN ADDITIONAL 50 MINUTES. MOVEMENTS SHALL BE RECORDED AT 1, 2, 3, 5, 6, 10, 20, 30, 50 AND 60 MINUTES. THE ALIGNMENT LOAD SHALL NOT EXCEED 7.5 KIPS (5 PERCENT OF THE MICROPILE DESIGN CAPACITY). DIAL GAUGES SHALL BE RESET TO ZERO AFTER THE INITIAL AL IS APPLIED.

ACCEPTANCE CRITERIA: A SUCCESSFUL PROOF LOAD TEST COMPLIES WITH THE FOLLOWING:

1. THE VERTICAL MOVEMENT AT THE TOP OF THE MICROPILE, RELATIVE TO THE POSITION OF THE TOP OF THE MICROPILE PRIOR TO TESTING, SHALL NOT EXCEED 1" AT THE 150 KIP LOAD INCREMENT. (1)

2. AT THE END OF THE 225 KIP CREEP TEST LOAD INCREMENT, TEST MICROPILES SHALL HAVE A CREEP RATE NOT EXCEEDING 0.04 INCH/LOG CYCLE TIME (1 TO 10 MINUTES) OR 0.08 INCH/LOG CYCLE TIME (6 TO 60 MINUTES). THE CREEP RATE SHALL BE LINEAR OR DECREASING THROUGHOUT THE CREEP LOAD HOLD PERIOD.

PROOF TEST MICROPILE REJECTION: IF A PROOF/TESTED MICROPILE FAILS TO MEET THE ACCEPTANCE CRITERIA, THE CONTRACTOR SHALL PROOF TEST ANOTHER MICROPILE WITHIN THAT FOOTING AS SELECTED BY THE ENGINEER. FOR FAILED MICROPILES AND FURTHER CONSTRUCTION OF SUBSEQUENT MICROPILES, THE CONTRACTOR SHALL MODIFY THE DESIGN, THE CONSTRUCTION PROCEDURE, OR BOTH. THESE MODIFICATIONS MAY INCLUDE INSTALLING REPLACEMENT MICROPILES, INCORPORATING MICROPILES AT NOT MORE THAN 50 PERCENT OF THE MAXIMUM LOAD ATTAINED, POST GROUTING, MODIFYING INSTALLATION METHODS, INCREASING THE BOND LENGTH, OR CHANGING THE MICROPILE TYPE. ANY MODIFICATION THAT NECESSITATES CHANGES TO THE STRUCTURE DESIGN WILL REQUIRE THE CONTRACTING OFFICER'S PRIOR REVIEW AND ACCEPTANCE.

STRUCTURAL ABBREVIATIONS

AB	ANCHOR BOLT
ABV	ABOVE
ADD'L	ADDITIONAL
ADJ	ADJUSTABLE
AFF	ABOVE FINISH FLOOR
AGG	AGGREGATE
ALT	ALTERNATE
ANCH	ANCHOR
ARCH	ARCHITECTURAL
B/	BOTTOM OF
BEL	BELOW
BLDG	BUILDING
BLKG	BLOCKING
BM	BEAM
BN	BOUNDARY NAILING
BOT	BOTTOM
BRB	BUCKLING RESTRAINED BRACE
BRG	BEARING
BSE	BASIC SAFETY EARTHQUAKE
BTWN	BETWEEN
C	CAMBER
CAP	CAPACITY
CC	CENTER TO CENTER
CIP	CAST IN PLACE
CJ	CONSTRUCTION OR CONTROL JOINT
CL	CENTERLINE
CLG	CEILING
CLR	CLEAR
CMU	CONCRETE MASONRY UNIT
COL	COLUMN
CONC	CONCRETE
CONN	CONNECTION
CONST	CONSTRUCTION
CONT	CONTINUOUS
CONTR	CONTRACTOR
COORD	COORDINATE
CP	COMPLETE PENETRATION
CTR	CENTER
CY	CUBIC YARD
DB	DIVIDER BEAM
DBA	DEFORMED BAR ANCHOR
DBL	DOUBLE
DEMO	DEMOLISH
DET	DETAIL
DF	DOUGLAS FIR
DIA	DIAMETER
DIAG	DIAMETER
DKG	DECKING
DN	DOWN
DO	DITTO
DWF	DEFORMED WIRE FABRIC
DWG	DRAWING
DWL	DOWEL
EA	EACH
EE	EACH END
EF	EACH FACE
EL	ELEVATION
ELECT	ELECTRICAL
ELEV	ELEVATOR
EN	EDGE NAILING
EQ	EQUAL
EQUIP	EQUIPMENT
ERD	EMBEDED REBAR DOWEL
ES	EACH SIDE
EW	EACH WAY
EX	EXISTING
EXP	EXPANSION
EXT	EXTERIOR
FD	FLOOR DRAIN
FDN	FOUNDATION
FF	FINISH FLOOR
FIN	FINISH
FLG	FLANGE
FLR	FLOOR
FOB	FACE OF BUILDING
FS	FAR SIDE
FT	FEET
FTG	FOOTING
GA	GAUGE
GALV	GALVANIZED
GEN	GENERAL
GL	GLUE LAMINATED BEAM
GOVT	GOVERNMENT
GR	GRADE
GWB	GYPSUM WALL BOARD
HF	HEM–FIR
HGR	HANGER
HK	HOOK
HORIZ	HORIZONTAL
HP	HIGH POINT
HSS	HOLLOW STRUCTURAL SECTION
IBC	INTERNATIONAL BUILDING CODE
ID	INSIDE DIAMETER

IE	INVERT ELEVATION
IF	INSIDE FACE
IJ	ISOLATION JOINT – SEE C/S–803
IN	INCH
INFO	INFORMATION
INT	INTERIOR
JST	JOIST
JT	JOINT
K	KIP (1,000 LBS.)
KSF	KIPS PER SQUARE FOOT
LF	LINEAL FOOT
LLH	LONG LEG HORIZONTAL
LLV	LONG LEG VERTICAL
LP	LOW POINT
LVL	LAMINATED VENEER LUMBER
MAX	MAXIMUM
MECH	MECHANICAL
MFR	MANUFACTURER
MIN	MINIMUM
MISC	MISCELLANEOUS
MOM	MOMENT
NIC	NOT IN CONTRACT
NOM	NOMINAL
NO	NUMBER
NS	NEAR SIDE
NS	NONSHRINK
NTS	NOT TO SCALE
OC	ON CENTER
OD	OUTSIDE DIAMETER
OF	OUTSIDE FACE
OPNG	OPENING
OPP	OPPOSITE
P	POST
PC	PIECE
PEN	PENETRATION
PL	PLATE
PL	PROPERTY LINE
PLWD	PLYWOOD
PNL	PANEL
PP	PARTIAL PENETRATION
PSI	POUNDS PER SQUARE INCH
PSF	POUNDS PER SQUARE FOOT
PT	POINT
PW	PUBLIC WORKS DRAWING NUMBER
PWT	PREFABRICATED WOOD TRUSS
R	RADIUS
RD	ROOF DRAIN
REINF	REINFORCING
RE	REMAINDER
REM	REMAIN(DER)
REQ'D	REQUIRED
RND	ROUND
RO	ROUGH OPENING
RTN	RETURN
SC	SLIP CRITICAL
SCHED	SCHEDULE
SECT	SECTION
SHT	SHEET
SIM	SIMILAR
SJ	SEISMIC JOINT
SOG	SLAB–ON–GRADE
SP	SPACE
SPEC	SPECIFICATION
SQ	SQUARE
SS	STAINLESS STEEL
STD	STANDARD
STIFF	STIFFENER
STIRR	STIRRUP
STL	STEEL
STRUCT	STRUCTURAL
SUPP	SUPPORT
SYM	SYMMETRICAL
T/	TOP OF
T&B	TOP AND BOTTOM
T&G	TONGUE AND GROOVE
THK	THICK(NESS)
THRU	THROUGH
TOF	TOP OF FOUNDATION
TRANS	TRANSVERSE
TYP	TYPICAL
UNO	UNLESS NOTED OTHERWISE
URM	UNREINFORCED MASONRY
VERT	VERTICAL
W/	WITH
WC	WOOD CONNECTOR PER S–822
WD	WOOD
WHS	WELDED HEADED STUD
WL	WATER LINE
W/O	WITHOUT
WP	WORK POINT
WWF	WELDED WIRE FABRIC

SOIL DESIGN VALUES

ALLOWABLE SOIL BEARING PRESSURE IN GLACIALLY CONSOLIDATED SOIL — 10 KSF

ALLOWABLE PILE CAPACITIES EX PILES NORTH OF GRID 34 — 75 KIPS / PILE DOWNWARD; 0 KIPS / PILE UPWARD

EX PILES SOUTH OF GRID 34 — 60 KIPS / PILE DOWNWARD; 0 KIPS / PILE UPWARD

MICROPILES, INCLUDING BATTERED — 150 KIPS UP OR DOWN

SHORT MICROPILES PER B/S501, INCLUDING BATTERED — 100 KIPS UP OR DOWN

COEFFICIENT OF FRICTION FOR ALLOWABLE SHEAR BETWEEN FOUNDATIONS AND SOIL — 0.45 W/ FACTOR OF SAFETY OF 1.5 INCLUDED IN VALUE

ALLOWABLE PASSIVE PRESSURE — 400 PSF W/ FACTOR OF SAFETY OF 1.5 INCLUDED IN VALUE

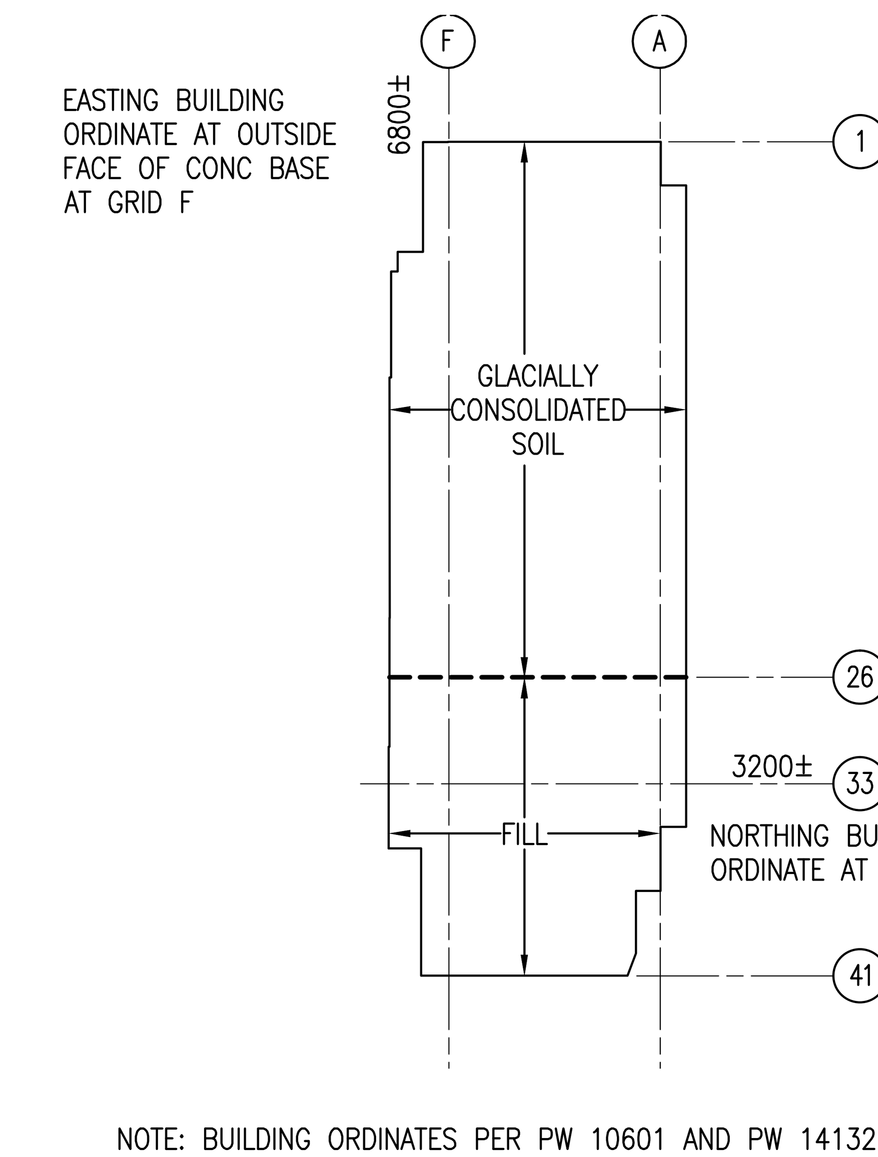

NOTE: BUILDING ORDINATES PER PW 10601 AND PW 14132 REFER TO PSNS DATUM. ORDINATES DO NOT REFER TO NAD 83 STATE PLANE COORDINATES.

KEY PLAN

SCALE: NTS

1/16/2015

SYM	DESCRIPTION	DATE	APPR
1	AMENDMENT 0003	3/2015	JMH

NAVFAC

GREGORY L. VARNEY — STATE OF WASHINGTON — 25842 — STRUCTURAL ENGINEER — PROFESSIONAL ENGINEER — 17 Mar 15 — SEAL

kpff Consulting Engineers
1601 Fifth Avenue, Suite 1600
Seattle, Washington 98101
(206) 622-5822 Fax (206) 622-8130
A/E INFO

APPROVED
FOR COMMANDER NAVFAC
ACTIVITY
SATISFACTORY TO DATE
DES JMH | DRW JBB | CHK GLV
PM/DM
BRANCH MANAGER
CHIEF ENG/ARCH
FIRE PROTECTION

DEPARTMENT OF THE NAVY
NAVAL FACILITIES ENGINEERING COMMAND
NAVAL FACILITIES ENGINEERING COMMAND ~ NORTHWEST
IPT
NAVAL STATION – SILVERDALE, WASHINGTON
NAVAL BASE KITSAP – PSNS & IMF
BREMERTON, WA
SPECIAL PROJECT RM 09-1471
REPAIR INSIDE MACHINE SHOP, BUILDING 431
GENERAL NOTES

SCALE: AS NOTED
EPROJECT NO.:
CONSTR. CONTR. NO.
NAVFAC DRAWING NO./PWD NO. 16027509/78156
SHEET 76 OF 207
S-003

DRAWFORM REVISION: 10 MARCH 2009

FILE NAME: T:\113000-113350\113283 (Building 431)\01 GenlNotes\78156_S003.dwg LAYOUT NAME: KPFF Plot Layout PLOTTED: Wednesday, March 18, 2015 – 3:30pm USER: johnh

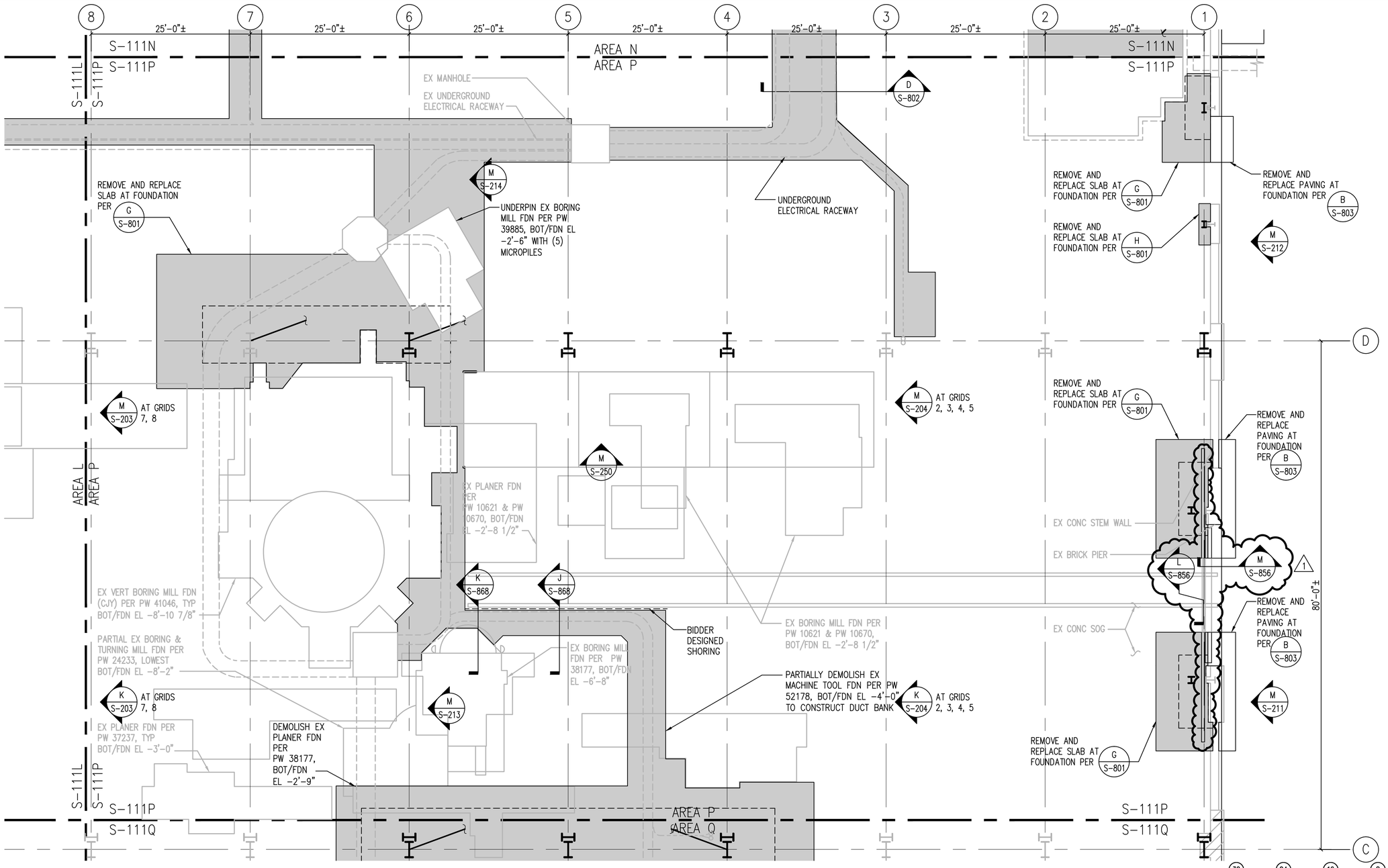

PARTIAL FIRST FLOOR PLAN - AREA P

SCALE: 1/8" = 1'-0"

GENERAL PLAN NOTES:

G1. SEE SHEETS S-001 THRU S-008 FOR STRUCTURAL NOTES, INSPECTION SCHEDULE, SYMBOLS AND ABBREVIATIONS.

G2. REFERENCE DRAWINGS:

- S-271 MASONRY WALL INTERIOR ELEVATION KEY AND PLAN
- S-501 TYPICAL FOUNDATION DETAILS
- S-517 CONCRETE DETAILS AND BEAM SCHEDULE
- S-541 BRB DETAILS AND BRB NOTES
- S-551 SCBF DETAILS AND NOTES
- S-801, S-802 TYPICAL CONCRETE SLAB DETAILS
- L/S-581 FOR WF BEAM CONNECTIONS

G3. SEE ARCHITECTURAL SHEETS FOR NON-STRUCTURAL WALL INFORMATION AND EXTENTS, AND FOR ADDITIONAL WALLS NOT SHOWN.

G4. ALL EXISTING ELEVATIONS SHOWN ARE BASED ON INFORMATION FROM ORIGINAL DRAWINGS AND SHALL BE VERIFIED BY THE CONTRACTOR PRIOR TO ANY WORK BEING DONE.

PLAN NOTES:

1. REPLACE EXISTING BOLLARDS REMOVED AS PART OF WORK WITH NEW BOLLARDS PER A S-803.
2. INDICATES APPROXIMATE EXTENT OF SLAB REMOVAL AND REPLACEMENT. COORDINATE FINAL EXTENT WITH STRUCTURAL, ELECTRICAL AND PLUMBING REQUIREMENTS.

1/8" = 1'-0"

0 4 8 16 24

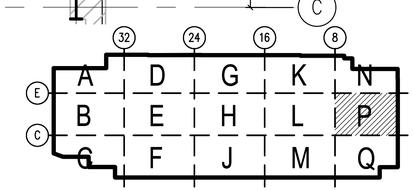

KEY PLAN

SCALE: NTS

1/16/2015

STM	DESCRIPTION	DATE	APPR
1	AMENDMENT 0003	3/2015	JMH

NAVFAC

GREGORY L. VARNEY STATE OF WASHINGTON 25842 STRUCTURAL ENGINEER PROFESSIONAL ENGINEER 17 MAR 15

SEAL

kpff Consulting Engineers
1601 Fifth Avenue, Suite 1600
Seattle, Washington 98101
(206) 622-5822 Fax (206) 622-8130

A/E INFO

APPROVED

FOR COMMANDER NAVFAC

ACTIVITY

SATISFACTORY TO DATE

DES JMH DRW JBB CHK GLV

PM/DM

BRANCH MANAGER

CHIEF ENG/ARCH

FIRE PROTECTION

DEPARTMENT OF THE NAVY
NAVAL FACILITIES ENGINEERING COMMAND
NAVAL FACILITIES ENGINEERING COMMAND ~ NORTHWEST
NAVAL BASE KITSAP – PSNS & IMF
NAVAL STATION – SILVERDALE, WASHINGTON
BREMERTON, WA

SPECIAL PROJECT RM 09-1471
REPAIR INSIDE MACHINE SHOP, BUILDING 431

PARTIAL FIRST FLOOR PLAN – AREA P

SCALE: AS NOTED

EPROJECT NO.:

CONSTR. CONTR. NO.

NAVFAC DRAWING NO./PWD NO.
16027550/78197

SHEET 117 OF 207

S-111P

DRAWFORM REVISION: 10 MARCH 2009

FILE NAME: T:\113000-113350\113283 (Building 431)\02 Plans\78197_S111P.dwg LAYOUT NAME: KPFF Plot Layout PLOTTED: Wednesday, March 18, 2015 - 3:30pm USER: johnh

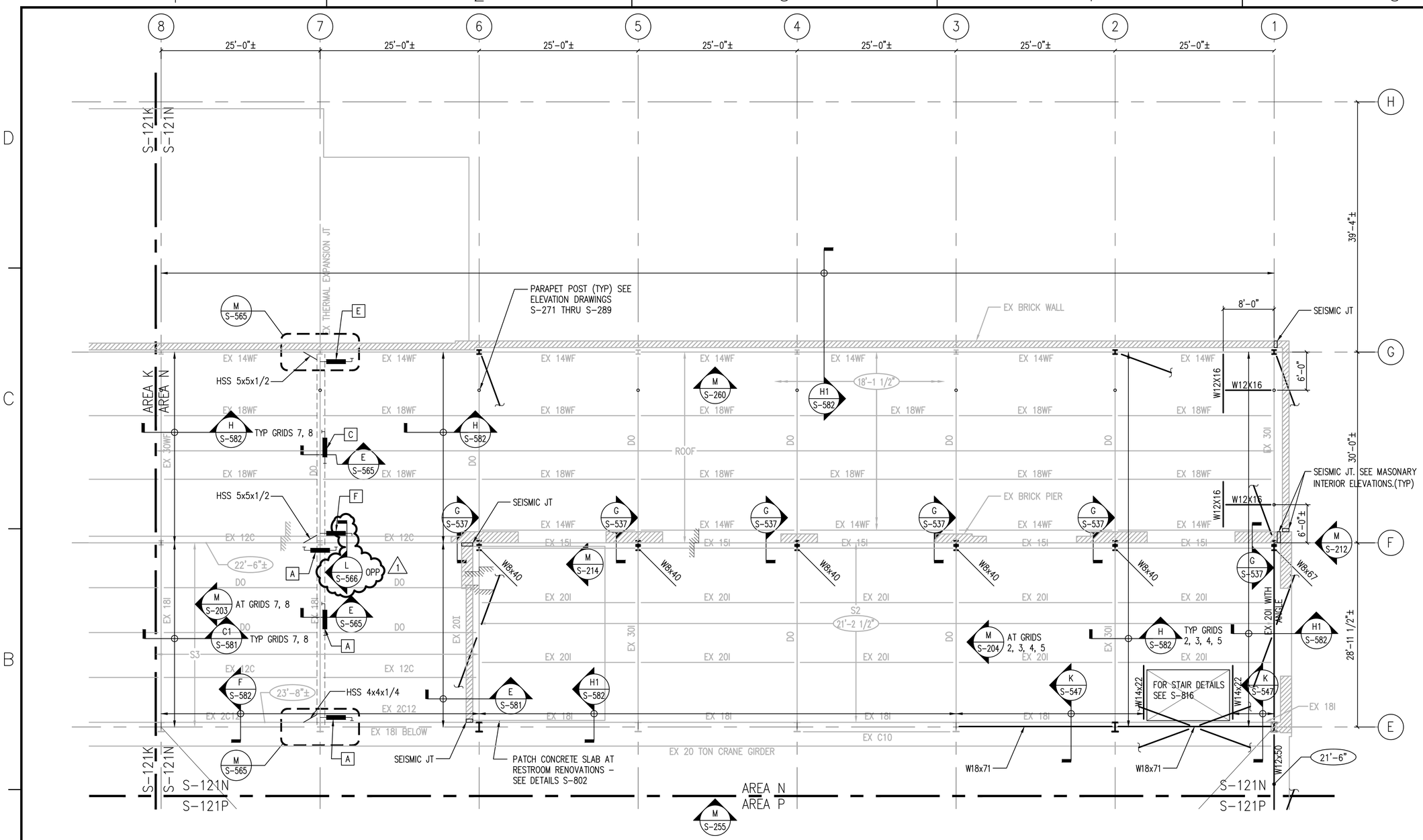

PARTIAL SECOND FLOOR AND ROOF PLAN - AREA N

SCALE: 1/8" = 1'-0"

GENERAL PLAN NOTES:

G1. SEE SHEETS S-001 THRU S-008 FOR STRUCTURAL NOTES, INSPECTION SCHEDULE, SYMBOLS AND ABBREVIATIONS.

G2. REFERENCE DRAWINGS:

- S-271 MASONRY WALL INTERIOR ELEVATION KEY AND PLAN
- S-501 TYPICAL FOUNDATION DETAILS
- S-517 CONCRETE DETAILS AND BEAM SCHEDULE
- S-541 BRB DETAILS AND BRB NOTES
- S-551 SCBF DETAILS AND NOTES
- S-801, S-802 TYPICAL CONCRETE SLAB DETAILS
- L/S-581 FOR WF BEAM CONNECTIONS

G3. SEE ARCHITECTURAL SHEETS FOR NON-STRUCTURAL WALL INFORMATION AND EXTENTS, AND FOR ADDITIONAL WALLS NOT SHOWN.

G4. ALL EXISTING ELEVATIONS SHOWN ARE BASED ON INFORMATION FROM ORIGINAL DRAWINGS AND SHALL BE VERIFIED BY THE CONTRACTOR PRIOR TO ANY WORK BEING DONE.

PLAN NOTES:

1. S2 INDICATES EX 5"± STRUCTURAL REINFORCED CONC SLAB.
2. S3 INDICATES EX 2x4 STRAIGHT SHEATHING UNDER PLYWOOD SHEATHING.
3. [X] INDICATES LOCKUP DEVICE PER SCHEDULE ON (C / S-565)
4. SEE (L / S-581) FOR STANDARD BOLTED BEAM CONN INFO.

1/8" = 1'-0"

0 4 8 16 24

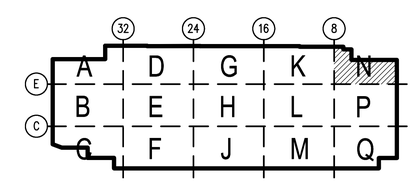

KEY PLAN

SCALE: NTS

1/16/2015

SYM	DESCRIPTION	DATE	APPR
1	AMENDMENT 0003	3/2015	JMH

NAVFAC

GREGORY L. VARNEY, STATE OF WASHINGTON, 25842, STRUCTURAL ENGINEER, PROFESSIONAL ENGINEER, 17 NOV 15

SEAL

kpff Consulting Engineers
1601 Fifth Avenue, Suite 1600
Seattle, Washington 98101
(206) 622-5822 Fax (206) 622-8130

A/E INFO

APPROVED

FOR COMMANDER NAVFAC

ACTIVITY

SATISFACTORY TO DATE

DES JMH DRW JBB CHK GLV

PM/DM

BRANCH MANAGER

CHIEF ENG/ARCH

FIRE PROTECTION

DEPARTMENT OF THE NAVY
NAVAL FACILITIES ENGINEERING COMMAND
NAVAL FACILITIES ENGINEERING COMMAND – NORTHWEST
NAVAL BASE KITSAP – PSNS & IMF
NAVAL STATION – SILVERDALE, WASHINGTON
BREMERTON, WA

SPECIAL PROJECT RM 09-1471
REPAIR INSIDE MACHINE SHOP, BUILDING 431

PARTIAL SECOND FLOOR AND ROOF PLAN – AREA N

SCALE: AS NOTED

EPROJECT NO.:

CONSTR. CONTR. NO.

NAVFAC DRAWING NO./PWD NO.
16027579/78226

SHEET 146 OF 207

S-121N

DRAWFORM REVISION: 10 MARCH 2009

FILE NAME: T:\113000-113350\113283 (Building 431)\02 Plans\78226_S121N.dwg LAYOUT NAME: KPFF Plot Layout PLOTTED: Thursday, March 19, 2015 - 8:34am USER: johnh

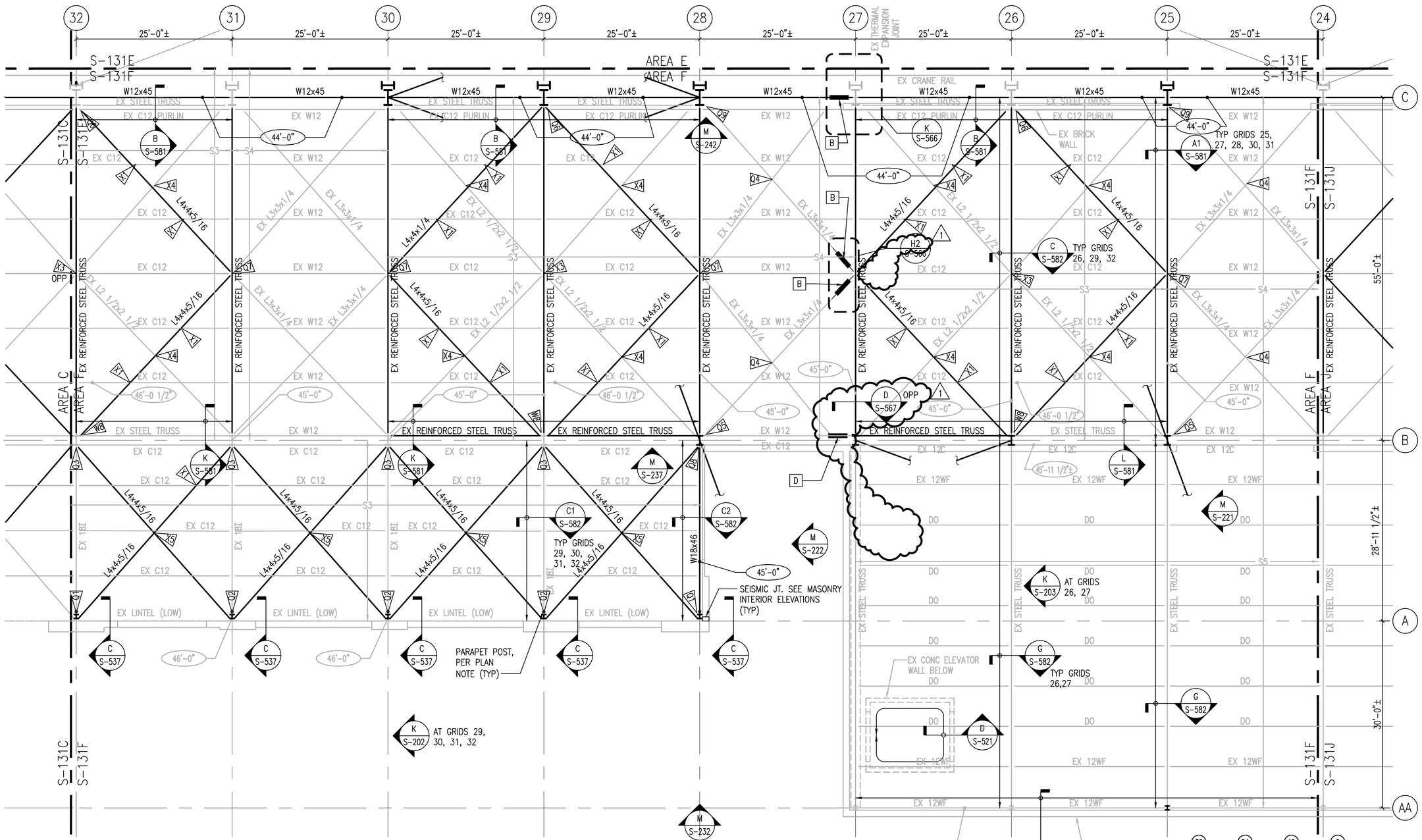

PARTIAL LOW BAY ROOF PLAN - AREA F

SCALE: 1/8" = 1'-0"

GENERAL PLAN NOTES:

G1. SEE SHEETS S-001 THRU S-008 FOR STRUCTURAL NOTES, INSPECTION SCHEDULE, SYMBOLS AND ABBREVIATIONS.

G2. REFERENCE DRAWINGS:
- S-271 MASONRY WALL INTERIOR ELEVATION KEY AND PLAN
- S-501 TYPICAL FOUNDATION DETAILS
- S-517 CONCRETE DETAILS AND BEAM SCHEDULE
- S-541 BRB DETAILS AND BRB NOTES
- S-551 SCBF DETAILS AND NOTES
- S-801, S-802 TYPICAL CONCRETE SLAB DETAILS
- L/S-581 FOR WF BEAM CONNECTIONS

G3. SEE ARCHITECTURAL SHEETS FOR NON-STRUCTURAL WALL INFORMATION AND EXTENTS, AND FOR ADDITIONAL WALLS NOT SHOWN.

G4. ALL EXISTING ELEVATIONS SHOWN ARE BASED ON INFORMATION FROM ORIGINAL DRAWINGS AND SHALL BE VERIFIED BY THE CONTRACTOR PRIOR TO ANY WORK BEING DONE.

LOW BAY ROOF PLAN NOTES:

L1. XX INDICATES CONNECTION REINFORCING. SEE FLAG NOTES ON S-531.

L2. S3 INDICATES EX 2x4 STRAIGHT SHEATHING UNDER PLYWOOD SHEATHING.

L3. S4 INDICATES EX 1 1/2" METAL ROOF DECK

L4. S5 INDICATES EX 3"± STRUCTURAL CONC SLAB

L5. X INDICATES LOCKUP DEVICE PER SCHEDULE ON C/S-565

L6. ∘ INDICATES PARAPET POSTS PER MASONRY ELEVATIONS S-272-S-289

1/8" = 1'-0"

0 4 8 16 24

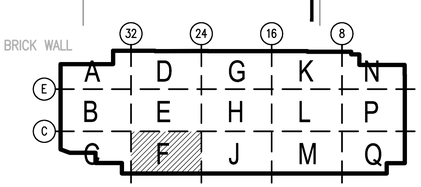

KEY PLAN

SCALE: NTS

1/16/2015

1	AMENDMENT 0003	3/2015	JMH	
SYM	DESCRIPTION	DATE	APPR	

NAVFAC

GREGORY L. VARNEY, STATE OF WASHINGTON, 25842, STRUCTURAL ENGINEER, PROFESSIONAL ENGINEER, 17 MAR 15

SEAL

kpff Consulting Engineers
1601 Fifth Avenue, Suite 1600
Seattle, Washington 98101
(206) 622-5822 Fax (206) 622-8130

A/E INFO.

APPROVED

FOR COMMANDER NAVFAC

ACTIVITY

SATISFACTORY TO DATE

DES JMH DRW JBB CHK GLV

PM/DM

BRANCH MANAGER

CHIEF ENG/ARCH

FIRE PROTECTION

DEPARTMENT OF THE NAVY
NAVAL FACILITIES ENGINEERING COMMAND
IPT NAVFAC FACILITIES ENGINEERING COMMAND ~ NORTHWEST
NAVAL STATION - SILVERDALE, WASHINGTON
NAVAL BASE KITSAP - PSNS & IMF
BREMERTON, WA

SPECIAL PROJECT RM 09-1471
REPAIR INSIDE MACHINE SHOP, BUILDING 431

PARTIAL LOW BAY ROOF PLAN - AREA F

SCALE: AS NOTED

EPROJECT NO.:

CONSTR. CONTR. NO.

NAVFAC DRAWING NO./PWD NO.
16027601/78248

SHEET 168 OF 207

S-131F

DRAWFORM REVISION: 10 MARCH 2009

FILE NAME: T:\113000-113350\113283 (Building 431)\02 Plans\78248_S131F.dwg LAYOUT NAME: KPFF Plot Layout PLOTTED: Thursday, March 19, 2015 - 8:33am USER: johnh

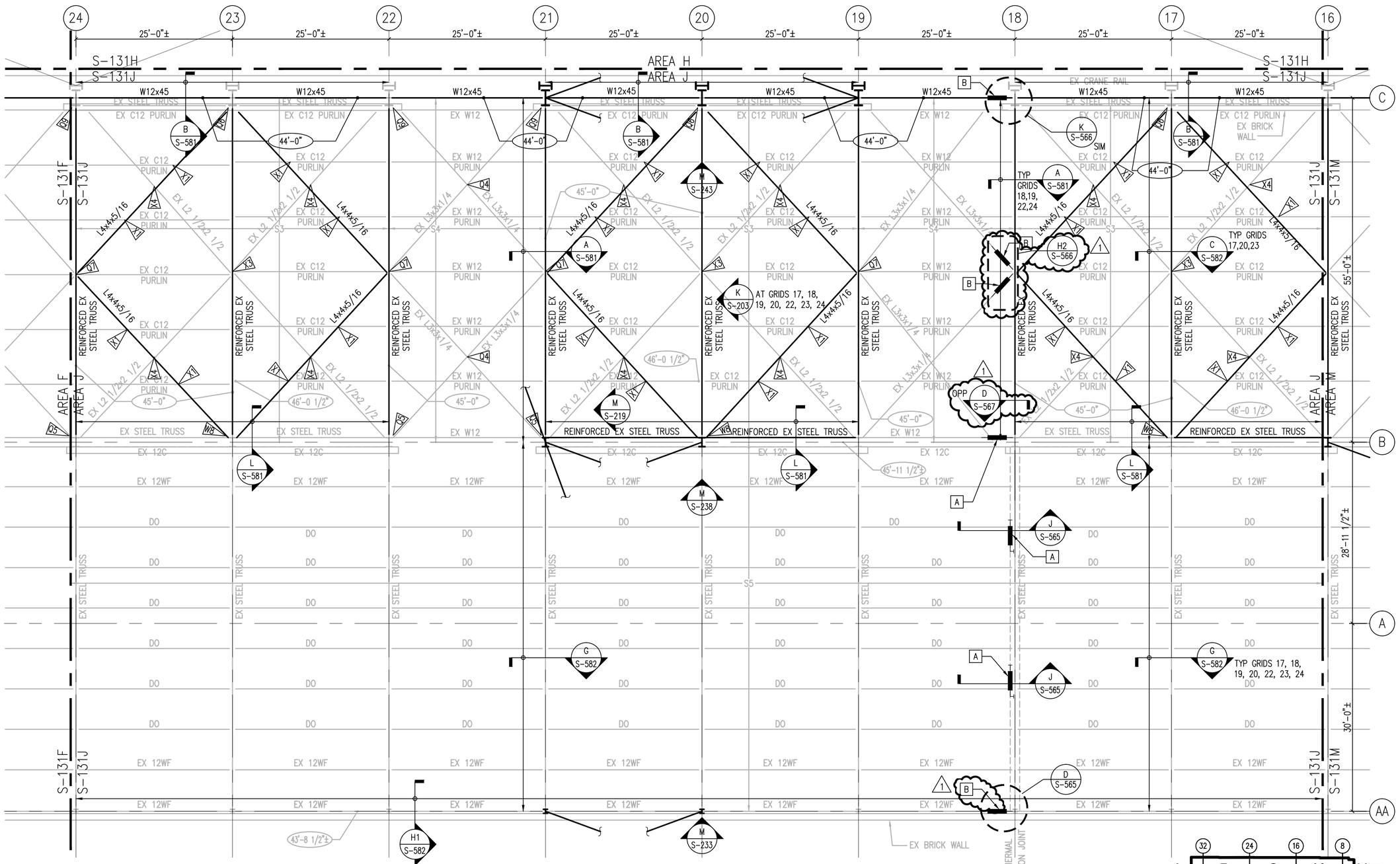

GENERAL PLAN NOTES:

G1. SEE SHEETS S-001 THRU S-008 FOR STRUCTURAL NOTES, INSPECTION SCHEDULE, SYMBOLS AND ABBREVIATIONS.

G2. REFERENCE DRAWINGS:
- S-271 MASONRY WALL INTERIOR ELEVATION KEY AND PLAN
- S-501 TYPICAL FOUNDATION DETAILS
- S-517 CONCRETE DETAILS AND BEAM SCHEDULE
- S-541 BRB DETAILS AND BRB NOTES
- S-551 SCBF DETAILS AND NOTES
- S-801, S-802 TYPICAL CONCRETE SLAB DETAILS
- L/S-581 FOR WF BEAM CONNECTIONS

G3. SEE ARCHITECTURAL SHEETS FOR NON-STRUCTURAL WALL INFORMATION AND EXTENTS, AND FOR ADDITIONAL WALLS NOT SHOWN.

G4. ALL EXISTING ELEVATIONS SHOWN ARE BASED ON INFORMATION FROM ORIGINAL DRAWINGS AND SHALL BE VERIFIED BY THE CONTRACTOR PRIOR TO ANY WORK BEING DONE.

PARTIAL LOW BAY ROOF PLAN - AREA J

SCALE: 1/8" = 1'-0"

LOW BAY ROOF PLAN NOTES:

L1. XX INDICATES CONNECTION REINFORCING. SEE FLAG NOTES ON S-531.

L2. S3 INDICATES EX 2x4 STRAIGHT SHEATHING UNDER PLYWOOD SHEATHING.

L3. S4 INDICATES EX 1 1/2" METAL ROOF DECK

L4. S5 INDICATES EX 3"± STRUCTURAL CONC SLAB

L5. X INDICATES LOCKUP DEVICE PER SCHEDULE ON C/S-565

1/8" = 1'-0"

0 4 8 16 24

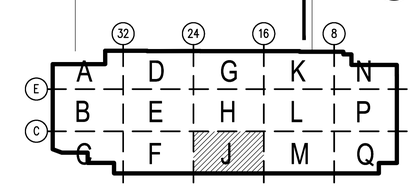

KEY PLAN

SCALE: NTS

1/16/2015

SYM	DESCRIPTION	DATE	APPR
1	AMENDMENT 0003	3/2015	JMH

NAVFAC

GREGORY L. VARNEY, STATE OF WASHINGTON, 25842, STRUCTURAL ENGINEER, PROFESSIONAL ENGINEER, 17 Mar 15, SEAL

kpff Consulting Engineers
1601 Fifth Avenue, Suite 1600
Seattle, Washington 98101
(206) 622-5822 Fax (206) 622-8130

A/E INFO.

APPROVED

FOR COMMANDER NAVFAC

ACTIVITY

SATISFACTORY TO DATE

DES JMH DRW JBB CHK GLV

PM/DM

BRANCH MANAGER

CHIEF ENG/ARCH

FIRE PROTECTION

DEPARTMENT OF THE NAVY
NAVAL FACILITIES ENGINEERING COMMAND
NAVAL FACILITIES ENGINEERING COMMAND ~ NORTHWEST
NAVAL STATION - SILVERDALE, WASHINGTON
IPT
NAVAL BASE KITSAP - PSNS & IMF
BREMERTON, WA

SPECIAL PROJECT RM 09-1471
REPAIR INSIDE MACHINE SHOP, BUILDING 431

PARTIAL LOW BAY ROOF PLAN - AREA J

SCALE: AS NOTED

EPROJECT NO.:

CONSTR. CONTR. NO.

NAVFAC DRAWING NO./PWD NO. 16027604/78251

SHEET 171 OF 207

S-131J

DRAWFORM REVISION: 10 MARCH 2009

FILE NAME: T:\113000-113350\113283 (Building 431)\02 Plans\78251_S131J.dwg LAYOUT NAME: KPFF Plot Layout PLOTTED: Thursday, March 19, 2015 - 8:44am USER: johnh

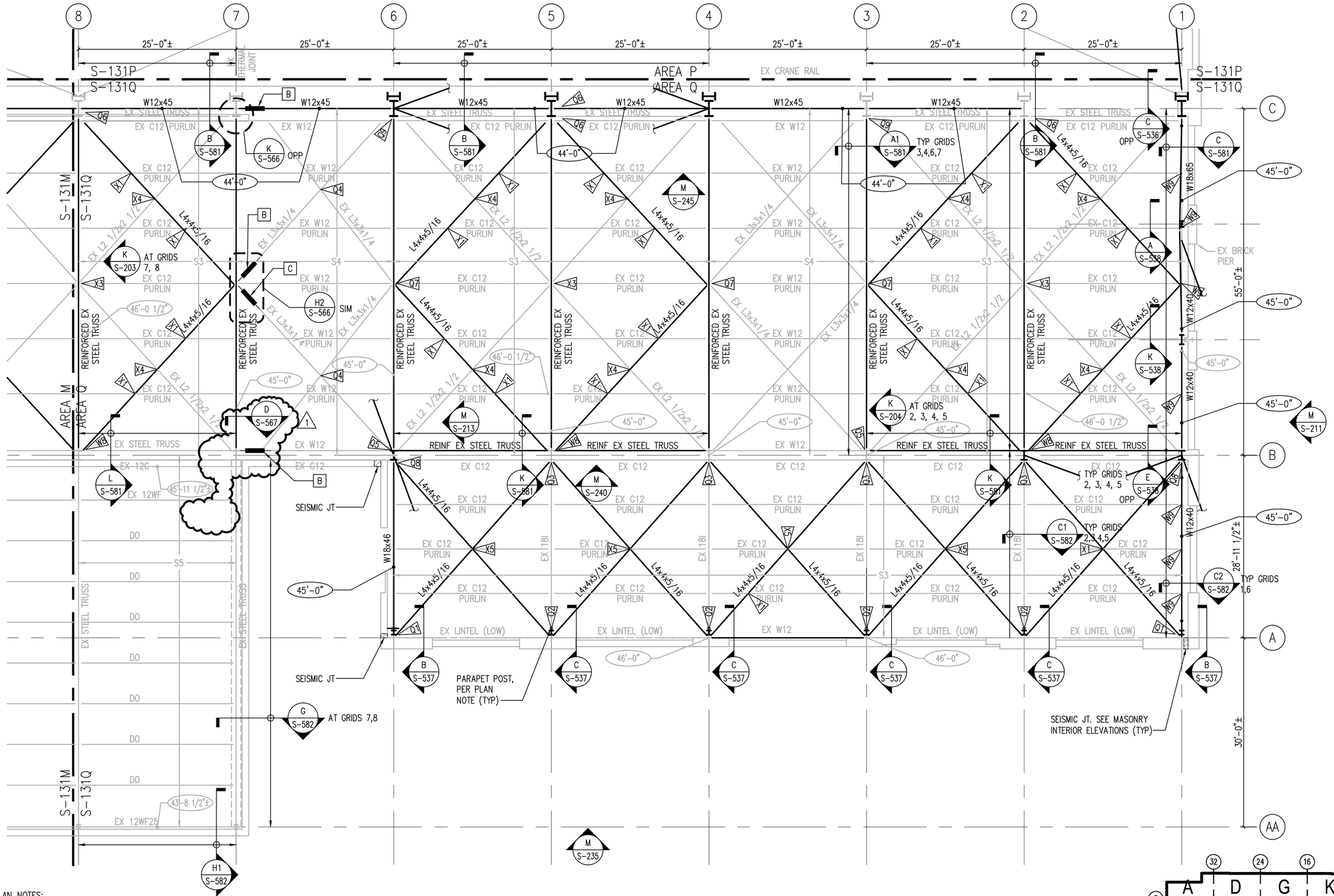

GENERAL PLAN NOTES:

G1. SEE SHEETS S-001 THRU S-008 FOR STRUCTURAL NOTES, INSPECTION SCHEDULE, SYMBOLS AND ABBREVIATIONS.

G2. REFERENCE DRAWINGS:

- S-271 MASONRY WALL INTERIOR ELEVATION KEY AND PLAN
- S-501 TYPICAL FOUNDATION DETAILS
- S-517 CONCRETE DETAILS AND BEAM SCHEDULE
- S-541 BRB DETAILS AND BRB NOTES
- S-551 SCBF DETAILS AND NOTES
- S-801, S-802 TYPICAL CONCRETE SLAB DETAILS
- L/S-581 FOR WF BEAM CONNECTIONS

G3. SEE ARCHITECTURAL SHEETS FOR NON-STRUCTURAL WALL INFORMATION AND EXTENTS, AND FOR ADDITIONAL WALLS NOT SHOWN.

G4. ALL EXISTING ELEVATIONS SHOWN ARE BASED ON INFORMATION FROM ORIGINAL DRAWINGS AND SHALL BE VERIFIED BY THE CONTRACTOR PRIOR TO ANY WORK BEING DONE.

PARTIAL LOW BAY ROOF PLAN - AREA Q

SCALE: 1/8" = 1'-0"

LOW BAY ROOF PLAN NOTES:

L1. XX INDICATES CONNECTION REINFORCING. SEE FLAG NOTES ON S-531.

L2. S3 INDICATES EX 2x4 STRAIGHT SHEATHING UNDER PLYWOOD SHEATHING.

L3. S4 INDICATES EX 1 1/2" METAL ROOF DECK

L4. S5 INDICATES EX 3"± STRUCTURAL CONC SLAB

L5. X INDICATES LOCKUP DEVICE PER SCHEDULE ON C/S-565

L6. ∘ INDICATES PARAPET POSTS PER MASONRY ELEVATIONS S-272-S289

1/8" = 1'-0"

0 4 8 16 24

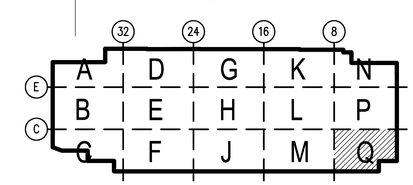

KEY PLAN

SCALE: NTS

1/16/2015

SYM	DESCRIPTION	DATE	APPR
1	AMENDMENT 0003	3/2015	JMH

NAVFAC

GREGORY L. VARNEY, STATE OF WASHINGTON, 25842, STRUCTURAL ENGINEER, PROFESSIONAL ENGINEER, 17 MAR 15

SEAL

kpff Consulting Engineers
1601 Fifth Avenue, Suite 1600
Seattle, Washington 98101
(206) 622-5822 Fax (206) 622-8130

A/E INFO

APPROVED

FOR COMMANDER NAVFAC

ACTIVITY

SATISFACTORY TO DATE

DES JMH DRW JBB CHK GLV

PM/DM

BRANCH MANAGER

CHIEF ENG/ARCH

FIRE PROTECTION

DEPARTMENT OF THE NAVY
NAVAL FACILITIES ENGINEERING COMMAND
NAVFAC
NAVAL FACILITIES ENGINEERING COMMAND – NORTHWEST
NAVAL BASE KITSAP – PSNS & IMF
NAVAL STATION – SILVERDALE, WASHINGTON
BREMERTON, WA

SPECIAL PROJECT RM 09-1471
REPAIR INSIDE MACHINE SHOP, BUILDING 431

PARTIAL LOW BAY ROOF PLAN – AREA Q

SCALE: AS NOTED

EPROJECT NO.:

CONSTR. CONTR. NO.

NAVFAC DRAWING NO./PWD NO. 16027610/78257

SHEET 177 OF 207

S-131Q

DRAWFORM REVISION: 10 MARCH 2009

FILE NAME: T:\113000-113350\113283 (Building 431)\02 Plans\78257_S1310.dwg LAYOUT NAME: KPFF Plot Layout PLOTTED: Thursday, March 19, 2015 - 8:33am USER: johnh

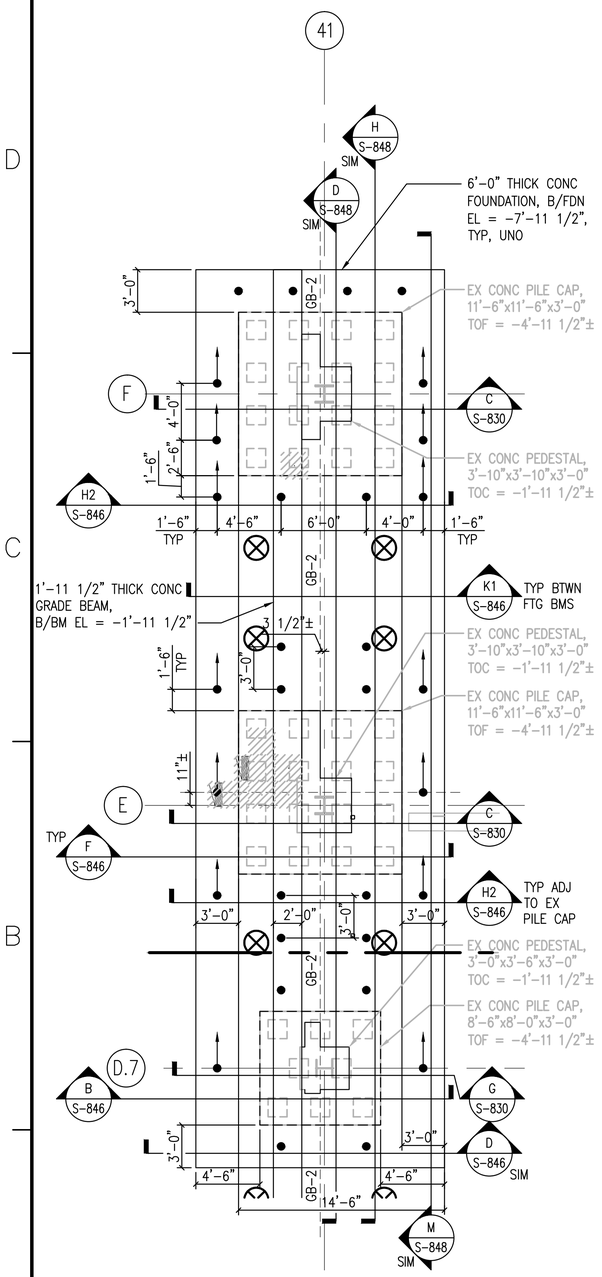

NOTE:
1. GB-X INDICATES GRADE BEAM PER M S-401.
2. MICROPILE LAYOUT SHOWN AT B/FTG ELEVATION. TYP UNO.

PARTIAL FOUNDATION PLAN

SCALE: 3/16" = 1'-0" S-101A, S-101B (J)

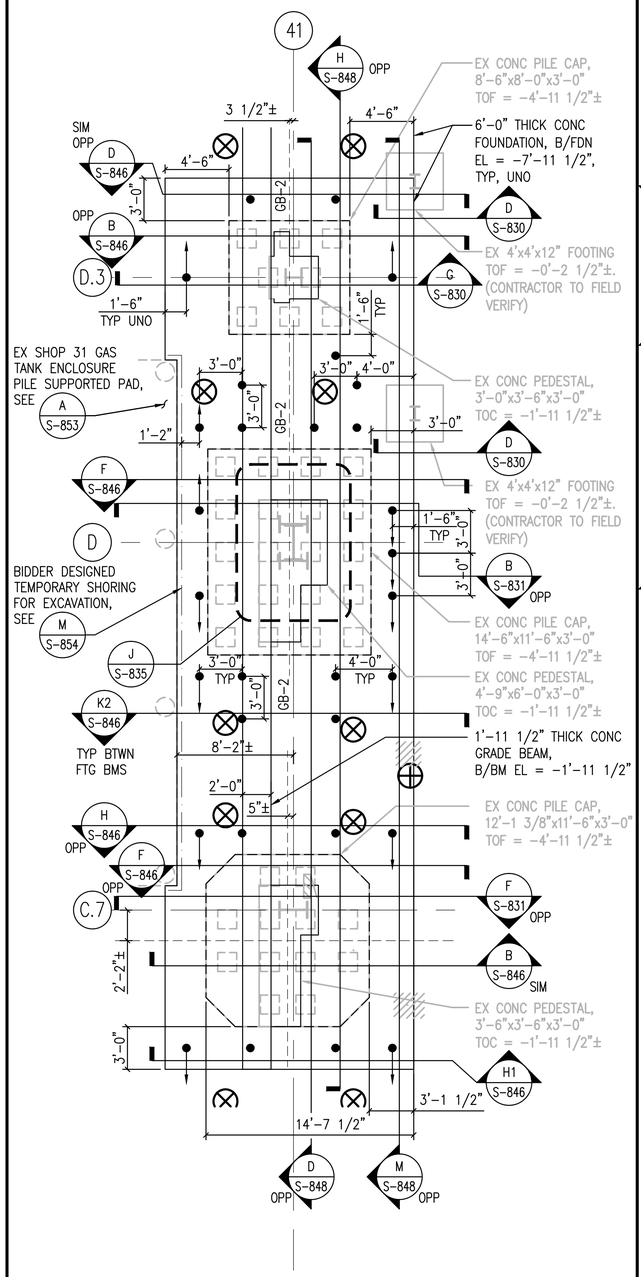

NOTE:
1. GB-X INDICATES GRADE BEAM PER M S-401.
2. MICROPILE LAYOUT SHOWN AT B/FTG ELEVATION. TYP UNO.

PARTIAL FOUNDATION PLAN

SCALE: 3/16" = 1'-0" S-101B (K)

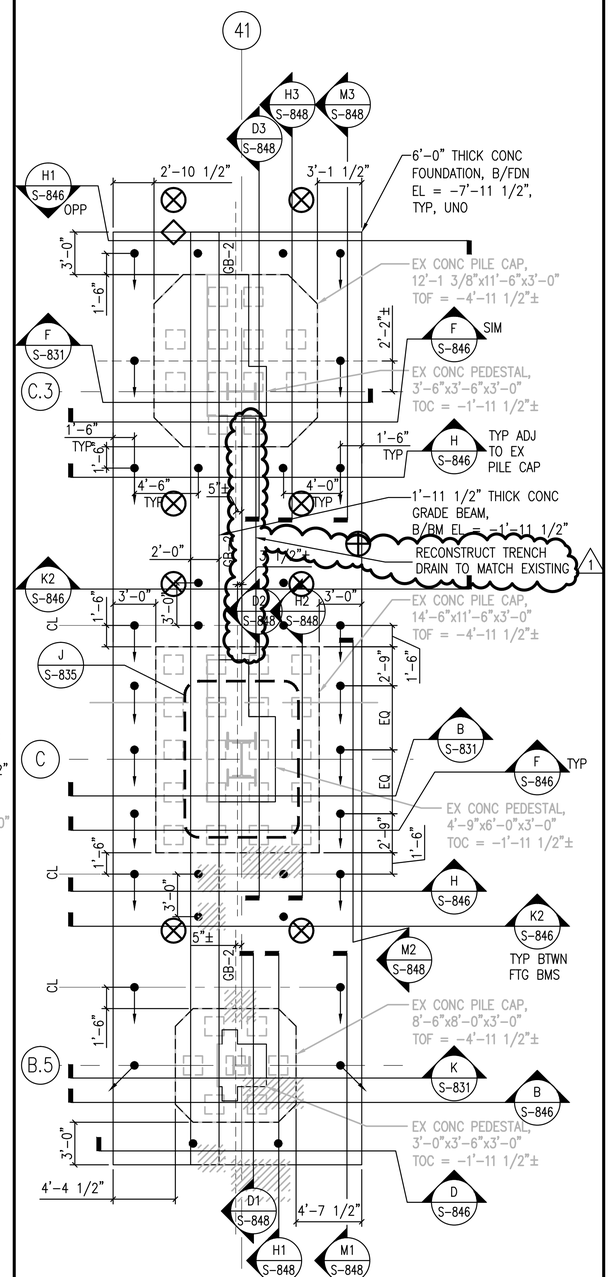

NOTE:
1. GB-X INDICATES GRADE BEAM PER M S-401.
2. MICROPILE LAYOUT SHOWN AT B/FTG ELEVATION. TYP UNO.

PARTIAL FOUNDATION PLAN

SCALE: 3/16" = 1'-0" S-101C, S-101B (L)

3/16" = 1'-0"

0 2 4 8 12 16

1/16/2015

STM	DESCRIPTION	DATE	APPR
1	AMENDMENT 0003	3/2015	JMH

NAVFAC

SEAL: GREGORY L. VARNEY, STATE OF WASHINGTON, 25842, STRUCTURAL ENGINEER, PROFESSIONAL ENGINEER, 17 MAR 15

kpff Consulting Engineers
1601 Fifth Avenue, Suite 1600
Seattle, Washington 98101
(206) 622-5822 Fax (206) 622-8130

A/E INFO

APPROVED

FOR COMMANDER NAVFAC

ACTIVITY

SATISFACTORY TO DATE

DES JMH DRW JBB CHK GLV

PM/DM

BRANCH MANAGER

CHIEF ENG/ARCH

FIRE PROTECTION

DEPARTMENT OF THE NAVY
NAVAL FACILITIES ENGINEERING COMMAND
NAVAL FACILITIES ENGINEERING COMMAND ~ NORTHWEST
NAVAL STATION ~ SILVERDALE, WASHINGTON
BREMERTON, WA
IPT NAVAL BASE KITSAP ~ PSNS & IMF
SPECIAL PROJECT RM 09-1471
REPAIR INSIDE MACHINE SHOP, BUILDING 431
PARTIAL FOUNDATION PLANS

SCALE: AS NOTED

EPROJECT NO.:

CONSTR. CONTR. NO.

NAVFAC DRAWING NO./PWD NO. 16027760/78407

SHEET 120 OF 318

S-404

DRAWFORM REVISION: 10 MARCH 2009

FILE NAME: T:\113000-113350\113283 (Building 431)\04 Details\78407_S404.dwg LAYOUT NAME: KPFF Plot Layout PLOTTED: Wednesday, March 18, 2015 - 3:37pm USER: johnh

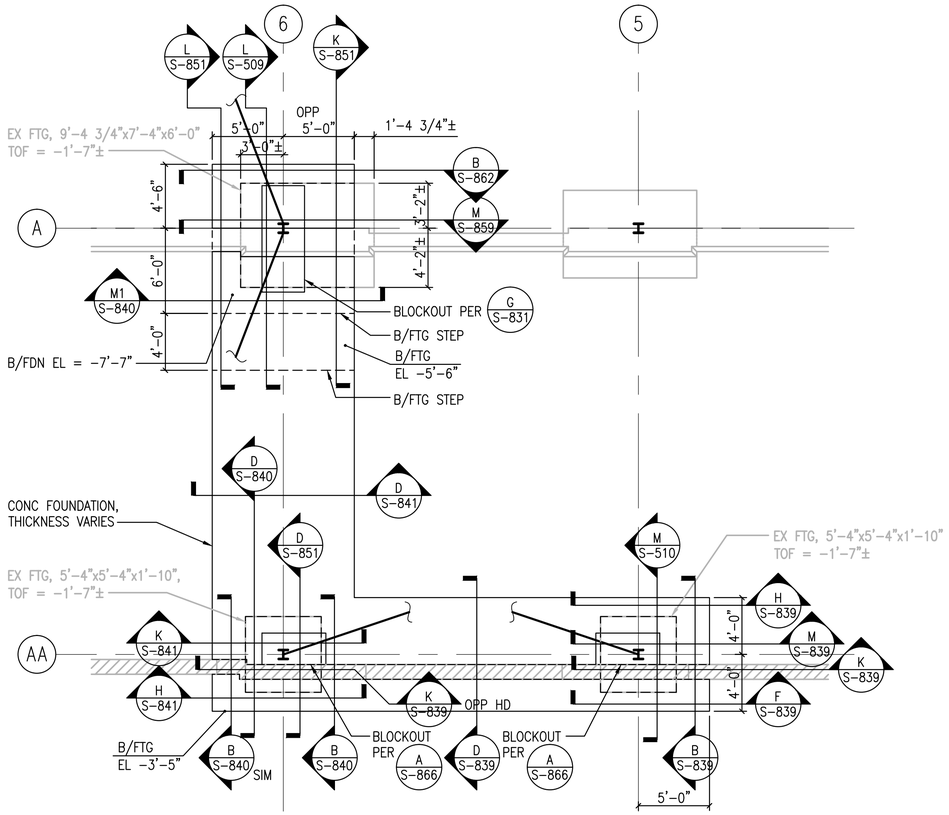

NOTE:

1. SEE L S-501 FOR TEMPORARY SHORING OF EX URM WALL FTG. TYP

PARTIAL FOUNDATION PLAN

SCALE: 3/16" = 1'-0"

S-101Q F

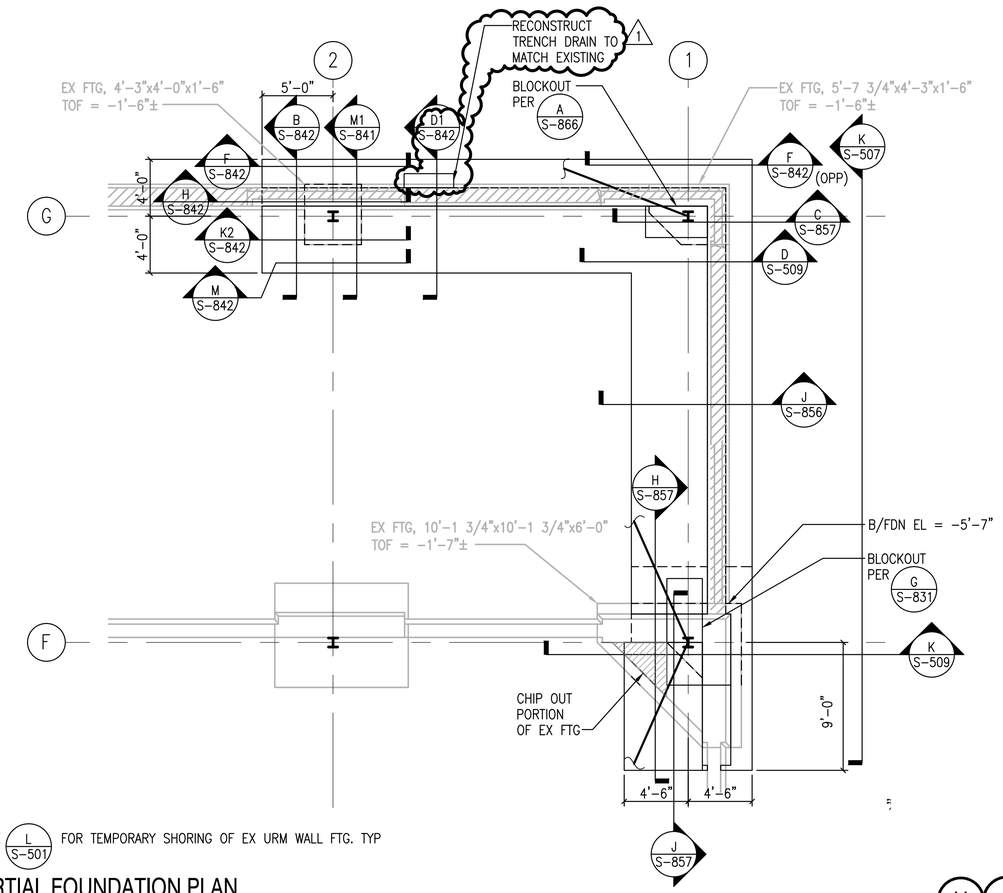

NOTE:

1. SEE L S-501 FOR TEMPORARY SHORING OF EX URM WALL FTG. TYP

PARTIAL FOUNDATION PLAN

SCALE: 3/16" = 1'-0"

S-101N H

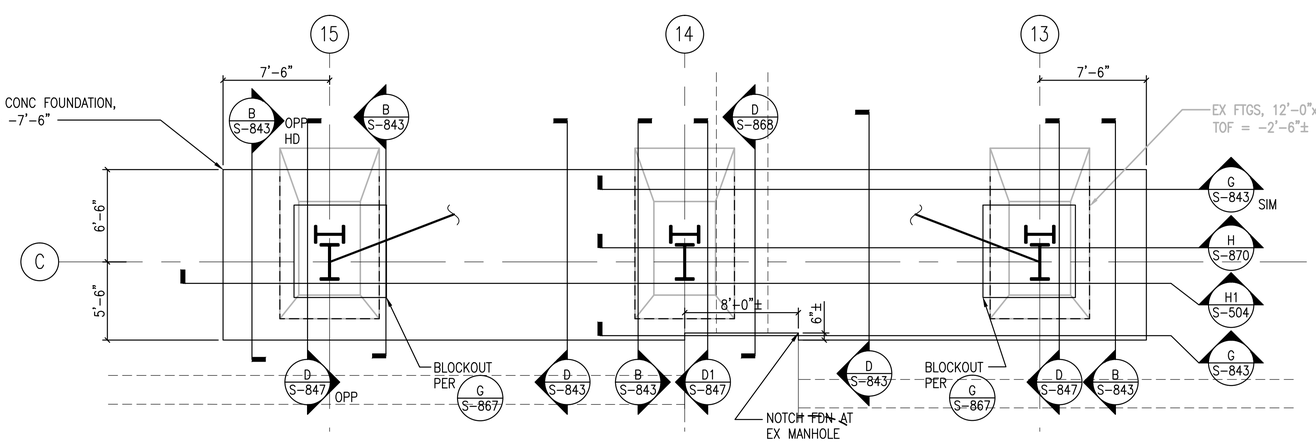

PARTIAL FOUNDATION PLAN

SCALE: 3/16" = 1'-0"

S-101M L

3/16" = 1'-0"

0 2 4 8 12 16

1/16/2015

SYM	DESCRIPTION	DATE	APPR
1	AMENDMENT 0003	3/2015	JMH

NAVFAC

SEAL: GREGORY L. VARNEY, STATE OF WASHINGTON, 25842, STRUCTURAL ENGINEER, PROFESSIONAL ENGINEER, 17 NOV 15

kpff Consulting Engineers
1601 Fifth Avenue, Suite 1600
Seattle, Washington 98101
(206) 622-5822 Fax (206) 622-8130

A/E INFO

APPROVED

FOR COMMANDER NAVFAC

ACTIVITY

SATISFACTORY TO DATE

DES JMH DRW JBB CHK GLV

PM/DM

BRANCH MANAGER

CHIEF ENG/ARCH

FIRE PROTECTION

DEPARTMENT OF THE NAVY
NAVAL FACILITIES ENGINEERING COMMAND
NAVAL FACILITIES ENGINEERING COMMAND – NORTHWEST
NAVAL BASE KITSAP – PSNS & IMF
NAVAL STATION – SILVERDALE, WASHINGTON
BREMERTON, WA

SPECIAL PROJECT RM 09-1471
REPAIR INSIDE MACHINE SHOP, BUILDING 431

PARTIAL FOUNDATION PLANS

SCALE: AS NOTED

EPROJECT NO.:

CONSTR. CONTR. NO.

NAVFAC DRAWING NO./PWD NO. 16027767/78414

SHEET 127 OF 318

S-411

DRAWFORM REVISION: 10 MARCH 2009

FILE NAME: T:\113000-113350\113283 (Building 431)\04 Details\78414_S411.dwg LAYOUT NAME: KPFF Plot Layout PLOTTED: Wednesday, March 18, 2015 - 3:37pm USER: johnh

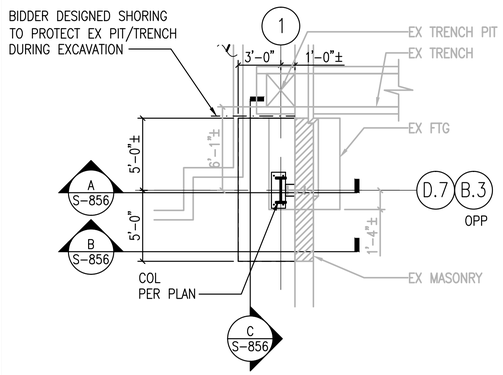

PARTIAL FOUNDATION PLAN
SCALE: 3/16" = 1'-0" S-101P, S-101Q (A)

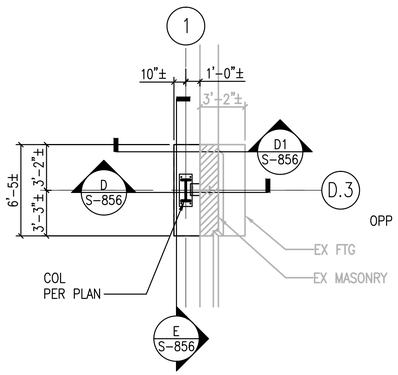

PARTIAL FOUNDATION PLAN
SCALE: 3/16" = 1'-0" S-101P (B)

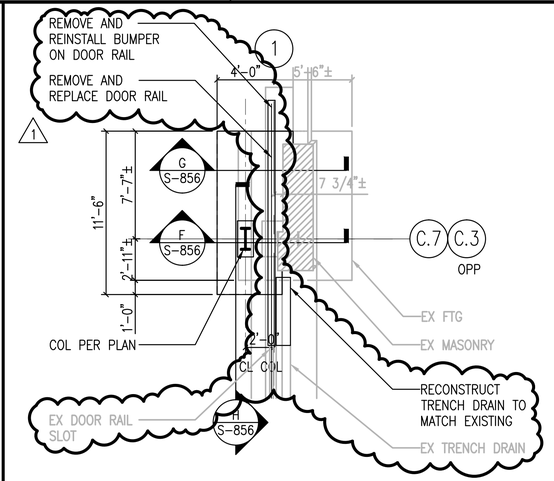

PARTIAL FOUNDATION PLAN
SCALE: 3/16" = 1'-0" S-101P, S-101Q (C)

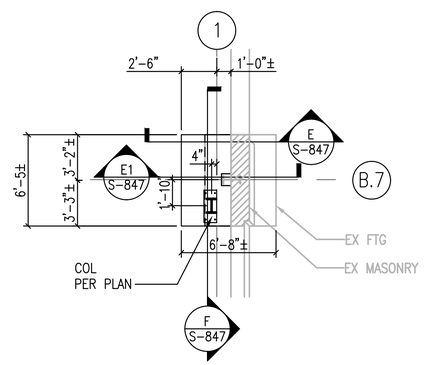

PARTIAL FOUNDATION PLAN
SCALE: 3/16" = 1'-0" S-101Q (F)

1/2" = 1'-0"
0 2 4 6

3/16" = 1'-0"
0 2 4 8 12 16

1/16/2015

SYM	DESCRIPTION	DATE	APPR
1	AMENDMENT 0003	3/2015	JMH

NAVFAC

GREGORY L. VARNEY STATE OF WASHINGTON 25842 STRUCTURAL ENGINEER PROFESSIONAL ENGINEER 17 MAR 15
SEAL

kpff Consulting Engineers
1601 Fifth Avenue, Suite 1600
Seattle, Washington 98101
(206) 622-5822 Fax (206) 622-8130

A/E INFO

APPROVED
FOR COMMANDER NAVFAC
ACTIVITY
SATISFACTORY TO DATE
DES JMH DRW JBB CHK GLV
PM/DM
BRANCH MANAGER
CHIEF ENG/ARCH
FIRE PROTECTION

DEPARTMENT OF THE NAVY
NAVAL FACILITIES ENGINEERING COMMAND
NAVAL FACILITIES ENGINEERING COMMAND ~ NORTHWEST
IPT
NAVAL BASE KITSAP – PSNS & IMF
NAVAL STATION – SILVERDALE, WASHINGTON
BREMERTON, WA
SPECIAL PROJECT RM 09-1471
REPAIR INSIDE MACHINE SHOP, BUILDING 431
PARTIAL FOUNDATION PLANS

SCALE: AS NOTED
EPROJECT NO.:
CONSTR. CONTR. NO.
NAVFAC DRAWING NO./PWD. NO.
16027771/78418
SHEET 131 OF 318
S-415

DRAWFORM REVISION: 10 MARCH 2009

FILE NAME: T:\113000-113350\113283 (Building 431)\04 Details\78418_S415.dwg LAYOUT NAME: KPFF Plot Layout PLOTTED: Wednesday, March 18, 2015 - 3:37pm USER: johnh

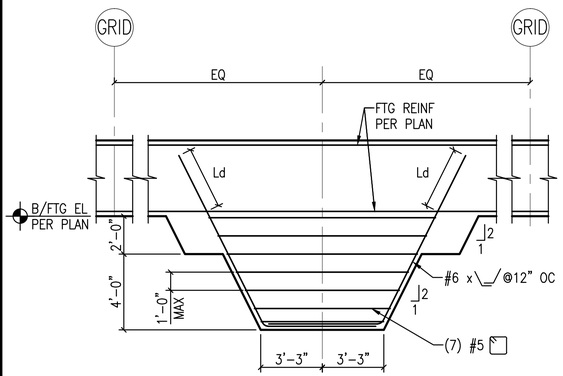

TYP 6'-0" DEEP SHEAR KEY

SCALE: 1/4" = 1'- 0" S-408, S-410 (A)

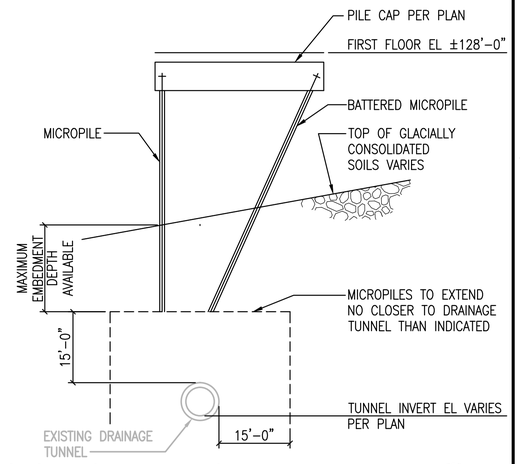

MICROPILES AT DRAINAGE TUNNEL

SCALE: 1/16" = 1'- 0" S-101A, S-501 (B)

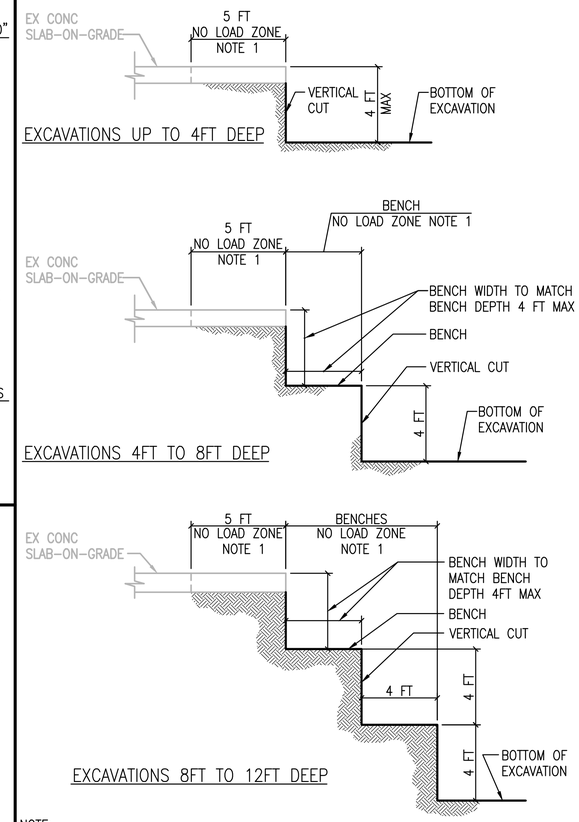

NOTE:
1. NO TRAFFIC, EQUIPMENT, OR STORAGE IS ALLOWED IN THE NO LOAD ZONE.
2. SOIL THAT RAVELS OFF VERTICAL CUT TO BE BACKFILLED WITH SOIL, CDF, OR CONCRETE.
3. SHALLOWER CUT MAY BE REQUIRED IF SEEPAGE IS PRESENT OR IF LOCAL SLOUGHING OCCURS.
4. FOR EXCAVATIONS > 12'-0" DEEP, USE ADDITIONAL 4'-0"x4'-0" BENCHES AS NEEDED.
5. SEE (K / S-801) IF THE LOWEST LEVEL OF EXCAVATION NEEDS TO BE WIDER THAN THE FOUNDATION TO ACCOMODATE THE CONTRACTOR'S MEANS AND METHODS.

TYPICAL EXCAVATION REQUIREMENTS

SCALE: 1/4" = 1'- 0" S-801 (F)

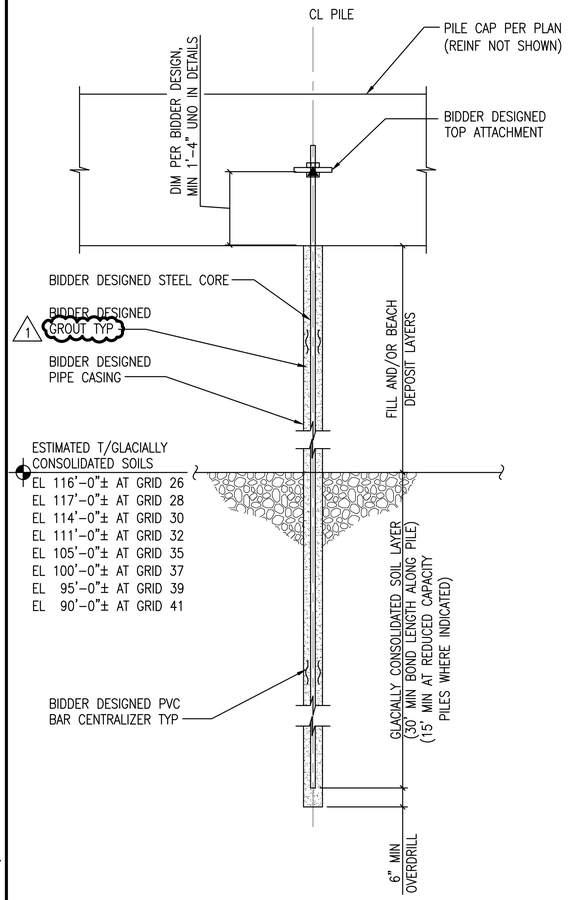

NOTES:
1. TYPICAL VERTICAL INSTALLATION SHOWN, BATTERED (15°) PILE IS SIMILAR.
2. PILE CAP DESIGN PER THESE DRAWINGS. ALL OTHER ELEMENTS OF MICROPILES SHALL BE BIDDER DESIGNED. SEE S-003 FOR REQUIRED ALLOWABLE PILE CAPACITY AND MICROPILE GENERAL NOTES.
3. PROVIDE TYPE II FULL-LOAD BAR COUPLERS AS REQUIRED.
4. ESTIMATED TOP OF GLACIALLY CONSOLIDATED SOILS ELEVATIONS ARE APPROXIMATE LOCATIONS BASED ON SOIL BORINGS AND ARE TAKEN FROM FIGURE 3 OF THE GEOTECHNICAL REPORT. ACTUAL ELEVATIONS WILL VARY. ESTIMATED ELEVATIONS AT GRIDS NOT SHOWN CAN BE INTERPOLATED FROM GIVEN VALUES.
5. MINIMUM OUTSIDE DIAMETER = 6".
6. COORDINATE USE OF DRILLING RIGS WITH WORK RESTRICTIONS IN THE SPECIFICATIONS, INCLUDING THOSE RELATED TO CRANE OPERATIONS.
7. AVAILABLE EMBEDMENT DEPTH IS LIMITED ADJACENT TO DRAINAGE TUNNEL. SEE B/S-501.
8. EQUIPMENT SHALL BE CAPABLE OF INSTALLATION OF MICROPILES THROUGH THE EXISTING RUBBLE SEAWALL.

TYPICAL MICROPILE SECTION

SCALE: 1/2" = 1'- 0" S-101A, S-101B, S-101C, S-101D, S-101E, S-101F, S-101G, S-101H, S-101J, S-101K, S-101L, S-101M, S-101N, S-101P, S-101Q (M)

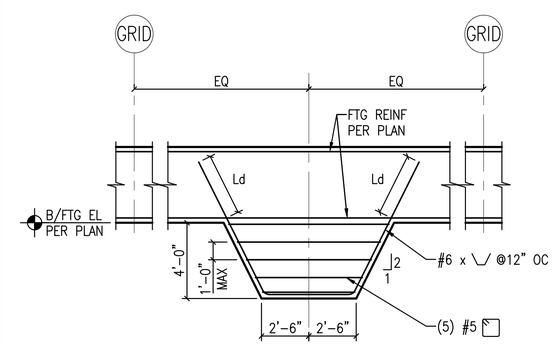

TYP 4'-0" DEEP SHEAR KEY

SCALE: 1/4" = 1'- 0" S-406, S-408 (E)

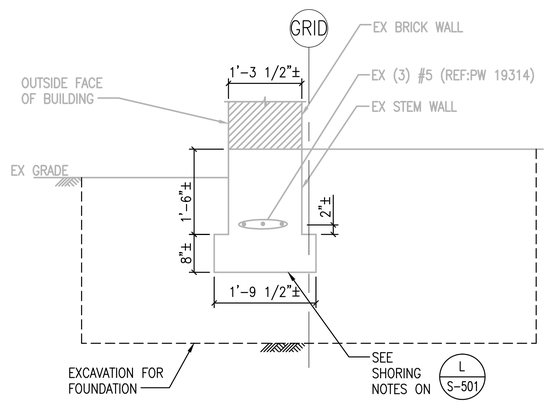

SECTION - EX STEM WALL

SCALE: 3/4" = 1'- 0" S-501 (F)

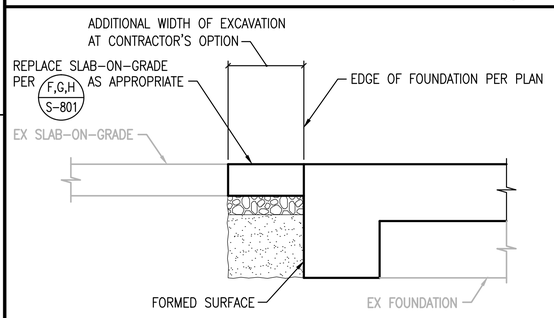

NOTES:
1. DETAIL IS INTENDED FOR CONTRACTOR'S USE WHERE THE CONTRACTOR'S MEANS AND METHODS REQUIRE A GREATER WIDTH OF EXCATION.
2. USE OF THIS OPTION IS SUBJECT TO CONTRACTING OFFICIAL APPROVAL OF IMPACTS ON SITE OPERATIONS.

ADDITIONAL EXCAVATION AT CONTRACTOR'S OPTION

SCALE: 1/2" = 1'- 0" S-501 (K)

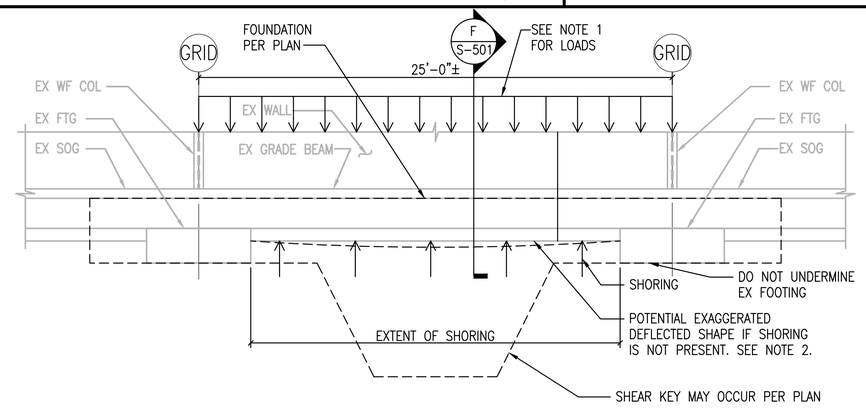

SHORING REQUIREMENTS:
1. SHORING OF EX STEM WALL SHALL SUPPORT A WEIGHT EQUAL TO 2100 LB/FT.
2. EX STEM WALL SHALL NOT DEFLECT MORE THAN 0.3" OR SPAN/600 WHICHEVER IS LESS.
3. SEE (F / S-501) FOR EX STEM WALL INFORMATION.
4. STAMPED AND SIGNED SHORING SUBMITTAL SHALL BE SUBMITTED TO THE CONTRACTING OFFICER PRIOR TO DOING ANY EXCAVATION.

TYP STEM WALL SHORING

SCALE: 1/4" = 1'- 0" (L)

3/4" = 1'-0" 0 1 2 4
1/2" = 1'-0" 0 2 4 6
1/16" = 1'-0" 0 16 32 48
1/4" = 1'-0" 0 2 4 8 12

1/16/2015

STM	DESCRIPTION	DATE	APPR
1	AMENDMENT 0003	3/2015	JMH

NAVFAC

GREGORY L. VERNEY, STATE OF WASHINGTON, 25842, PROFESSIONAL ENGINEER, 17 MAR 15 — SEAL

kpff Consulting Engineers
1601 Fifth Avenue, Suite 1600
Seattle, Washington 98101
(206) 622-5822 Fax (206) 622-8130

A/E INFO

APPROVED
FOR COMMANDER NAVFAC
ACTIVITY
SATISFACTORY TO DATE
DES JMH DRW JBB CHK GLV
PM/DM
BRANCH MANAGER
CHIEF ENG/ARCH
FIRE PROTECTION

DEPARTMENT OF THE NAVY
NAVAL FACILITIES ENGINEERING COMMAND ~ NORTHWEST
NAVAL FACILITIES ENGINEERING COMMAND
NAVAL BASE KITSAP – PSNS & IMF
BREMERTON, WA
SPECIAL PROJECT RM 09-1471
REPAIR INSIDE MACHINE SHOP, BUILDING 431
TYPICAL FOUNDATION DETAILS

SCALE: AS NOTED
EPROJECT NO.:
CONSTR. CONTR. NO.
NAVFAC DRAWING NO./PWD NO. 16027784/78431
SHEET 144 OF 318
S-501

DRAWFORM REVISION: 10 MARCH 2009

FILE NAME: T:\113000-113350\113283 (Building 431)\04 Details\78431_S501.dwg LAYOUT NAME: KPFF Plot Layout PLOTTED: Wednesday, March 18, 2015 - 3:37pm USER: johnh

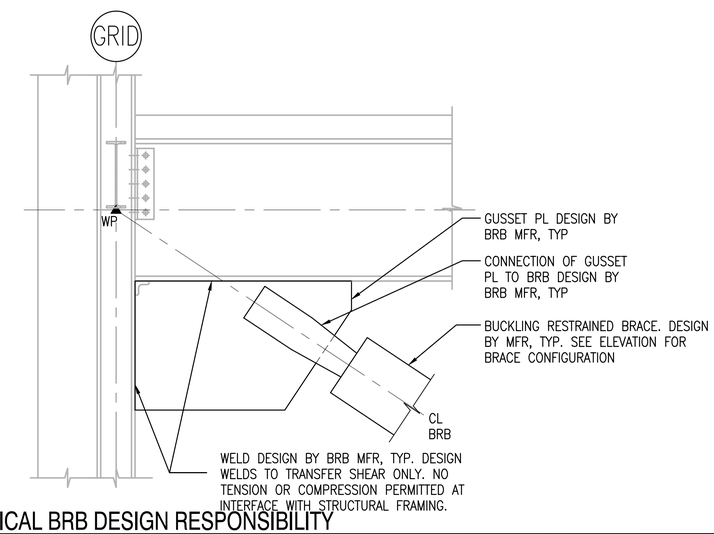

TYPICAL BRB DESIGN RESPONSIBILITY

NOT TO SCALE

S-541 (H)

BUCKLING RESTRAINED BRACE (BRB) SCHEDULE				
BRACE DESIGNATION	AREA Asce (IN2)	YIELD STRENGTH ø Pn (k)	MAX BRACE WIDTH (IN)	MAX BRACE DEPTH (IN)
BRB 0250	2.50	97.5	10	10
BRB 0325	3.25	126.75	10	10
BRB 0400	4.00	156.0	16 DIAMETER	16 DIAMETER
BRB 0450	4.50	175.5	10	10
BRB 0600	6.00	234.0	12	12
BRB 0750	7.50	292.5	12	12
BRB 0900	9.00	351.0	12	12

NOTES:

1. BUCKLING RESTRAINED BRACES ARE TO BE TESTED PER THE PROVISIONS OF AISC 341-10. SUPPLIER TO SUBMIT PROOF OF EACH BRACE'S COMPLIANCE WITH THE QUALIFIED LOADS AND STRAIN RANGES.
2. FSYC IS THE ACTUAL YIELD STRESS OF THE STEEL CORE AS DETERMINED BY A COUPON TEST. 38 KSI ≤ FYSC ≤ 46 KSI.
3. MAXIMUM βw NOT TO EXCEED 1.40. MAXIMUM w NOT TO EXCEED 1.20. WHERE β & ω ARE DEFINED BY AISC SEISMIC PROVISIONS.
4. BRACE STIFFNESS Keff TO BE (1.4 x Asce x E)/(Lwp-wp), WHERE THE VALUES Asce ARE TAKEN FROM THE TABLE AND Lwp-wp IS THE WORKPOINT – WORKPOINT LENGTH OF THE BRACE. Keff IS TO BE DETERMINED INCORPORATING THE STIFFNESS OF THE BEAMS, COLUMNS, AND GUSSET PLATES.
5. ALL BRACES SHALL HAVE PROTECTED ZONES AS DEFINED BY M/S-541.
6. GUSSET PL, BRB CONNECTION TO GUSSET PL, AND GUSSET PL CONNECTION TO STEEL FRAMING TO BE DESIGNED BY BRB MANUFACTURER. THESE CONNECTIONS MAY BE WELDED, BOLTED, OR PIN CONNECTED.
7. BRB 0400 MUST USE A CIRCULAR CASING.
8. SEE H/S-541 FOR EXTENTS OF DESIGN RESPONSIBILITY OF BRB SUPPLIER.

BUCKLING RESTRAINED BRACE SCHEDULE

NOT TO SCALE

S-211 – S-225, S-231 – S-260 (L)

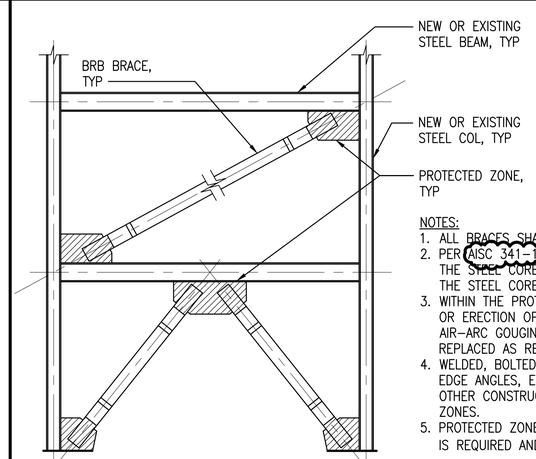

NOTES:

1. ALL BRACES SHALL HAVE PROTECTED ZONES AS SHOWN IN THIS DETAIL.
2. PER AISC 341-10, SECTION 16.6 THE PROTECTED ZONE SHALL INCLUDE THE STEEL CORE OF BRACING MEMBERS AND ELEMENTS THAT CONNECT THE STEEL CORE TO BEAMS AND COLUMNS.
3. WITHIN THE PROTECTED ZONE, DISCONTINUITIES CREATED BY FABRICATION OR ERECTION OPERATIONS, SUCH AS TACK WELDS, ERECTION AIDS, AIR-ARC GOUGING AND THERMAL CUTTING SHALL BE REPAIRED OR REPLACED AS REQUIRED BY THE CONTRACTING OFFICER.
4. WELDED, BOLTED, SCREWED OR SHOT-IN ATTACHMENTS FOR PERIMETER EDGE ANGLES, EXTERIOR FACADES, PARTITIONS, DUCT WORK, PIPING OR OTHER CONSTRUCTION SHALL NOT BE PLACED WITHIN THE PROTECTED ZONES.
5. PROTECTED ZONES SHALL BE PAINTED YELLOW EXCEPT WHERE WELDING IS REQUIRED AND STENCILED WITH "PROTECTED ZONE" IN RED.

TYPICAL BRB PROTECTED ZONE DETAIL

NOT TO SCALE

S-211 – S-225, S-231 – S-260 (M)

1/16/2015

SYM	DESCRIPTION	DATE	APPR
1	AMENDMENT 0003	3/2015	JMH

NAVFAC

GREGORY L. VARNEY, STATE OF WASHINGTON, 25842, STRUCTURAL ENGINEER, PROFESSIONAL ENGINEER, 17 MAR 15

SEAL

kpff Consulting Engineers
1601 Fifth Avenue, Suite 1600
Seattle, Washington 98101
(206) 622-5822 Fax (206) 622-8130

A/E INFO

APPROVED

FOR COMMANDER NAVFAC

ACTIVITY

SATISFACTORY TO DATE

DES JMH DRW JBB CHK GLV

PM/DM

BRANCH MANAGER

CHIEF ENG/ARCH

FIRE PROTECTION

DEPARTMENT OF THE NAVY
NAVAL FACILITIES ENGINEERING COMMAND
NAVAL FACILITIES ENGINEERING COMMAND ~ NORTHWEST
NAVAL STATION – SILVERDALE, WASHINGTON
NAVAL BASE KITSAP – PSNS & IMF
BREMERTON, WA
IPT
SPECIAL PROJECT RM 09-1471
REPAIR INSIDE MACHINE SHOP, BUILDING 431
BRB DETAILS AND BRB NOTES

SCALE: AS NOTED

EPROJECT NO.:

CONSTR. CONTR. NO.

NAVFAC DRAWING NO./PWD NO.
16027814/78461

SHEET 174 OF 318

S-541

DRAWFORM REVISION: 10 MARCH 2009

FILE NAME: T:\113000-113350\113283 (Building 431)\04 Details\78461_S541.dwg LAYOUT NAME: KPFF Plot Layout PLOTTED: Wednesday, March 18, 2015 – 3:37pm USER: johnh

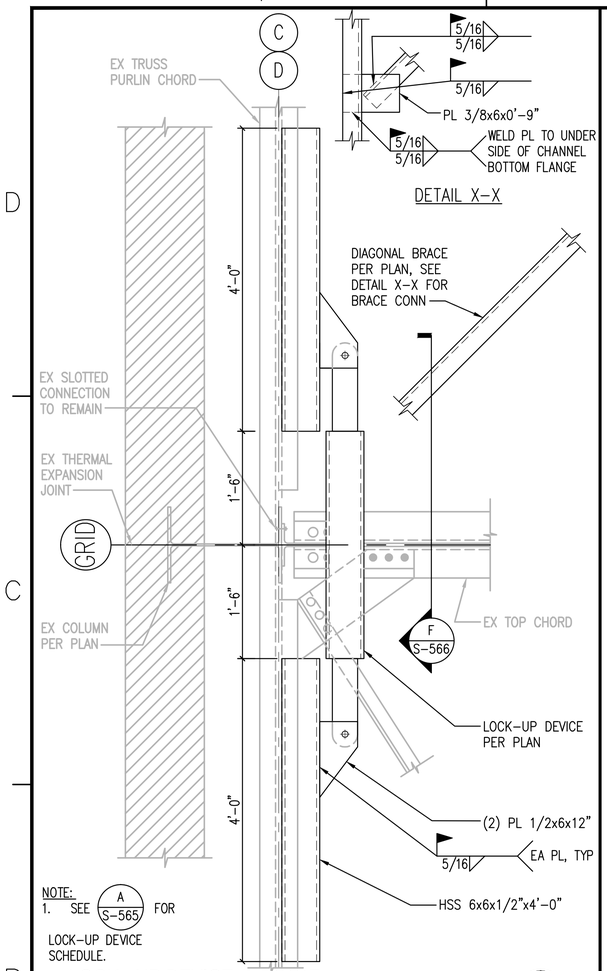

LOCK - UP DEVICE AT ROOF

SCALE: 1" = 1'-0" S-161E, S-161F, S-161H, S-161J, S-161P, S-161Q (E)

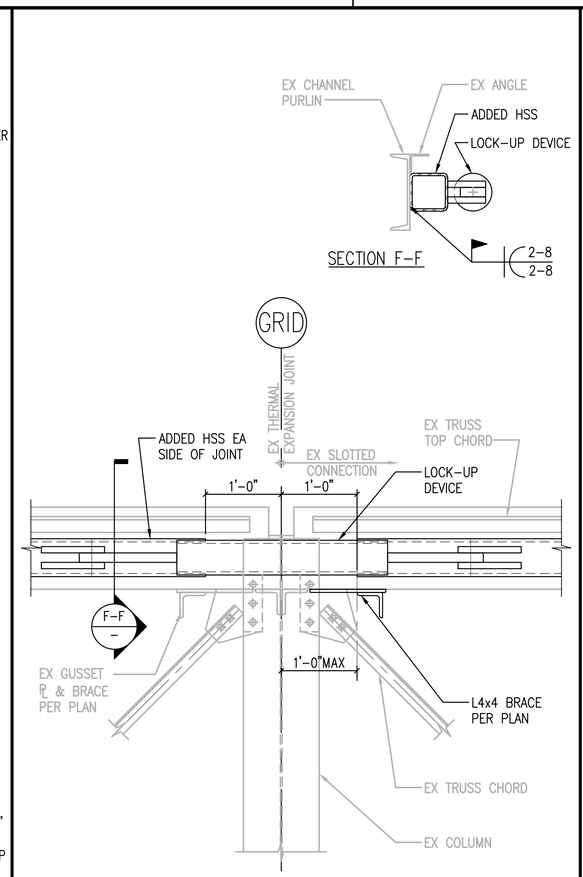

SECTION - LOCK-UP DEVICE AT ROOF

SCALE: 1" = 1'-0" S-566 (F)

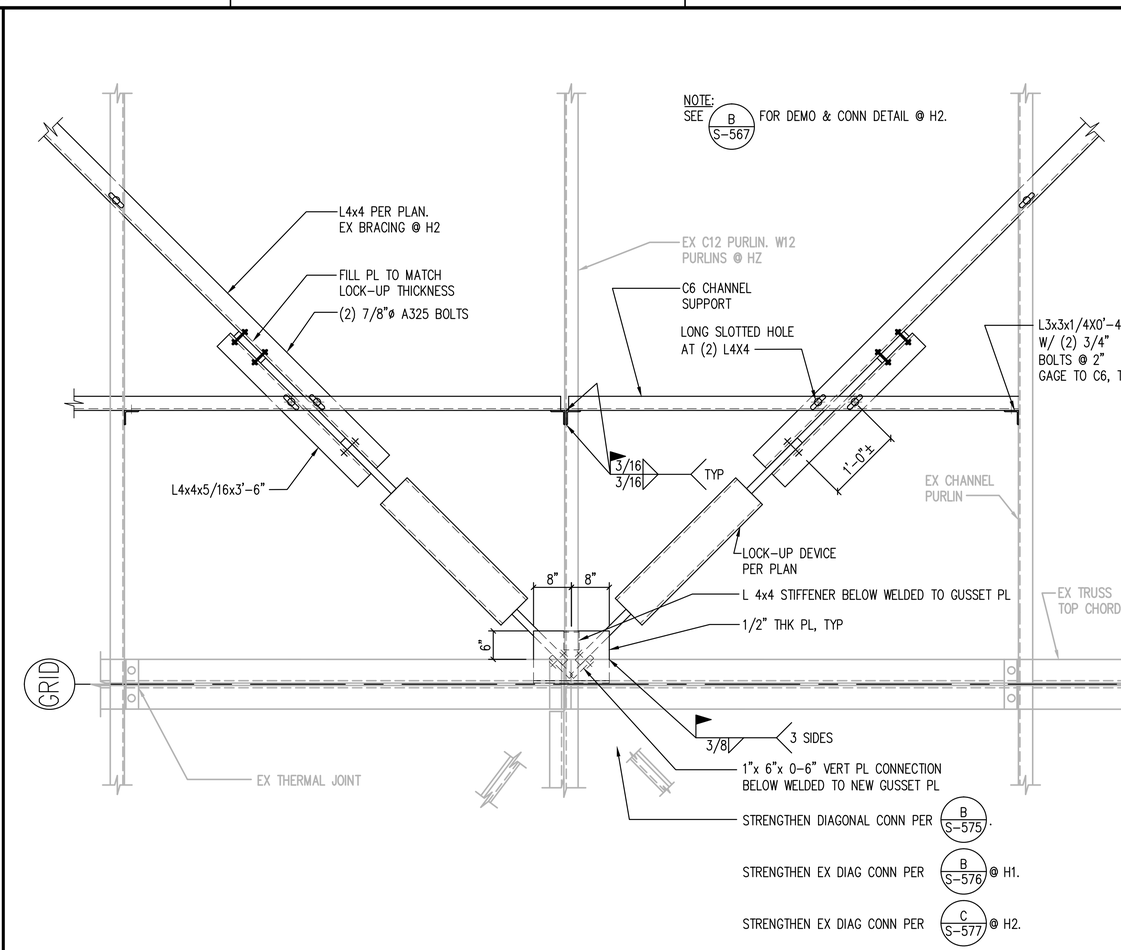

LOCK - UP DEVICE AT THERMAL JT AT HIGH ROOF

SCALE: 3/4" = 1'-0" S-131F, S-131J, S-131Q, S-161E, S-161H, S-161P (H) (H1) (H2)

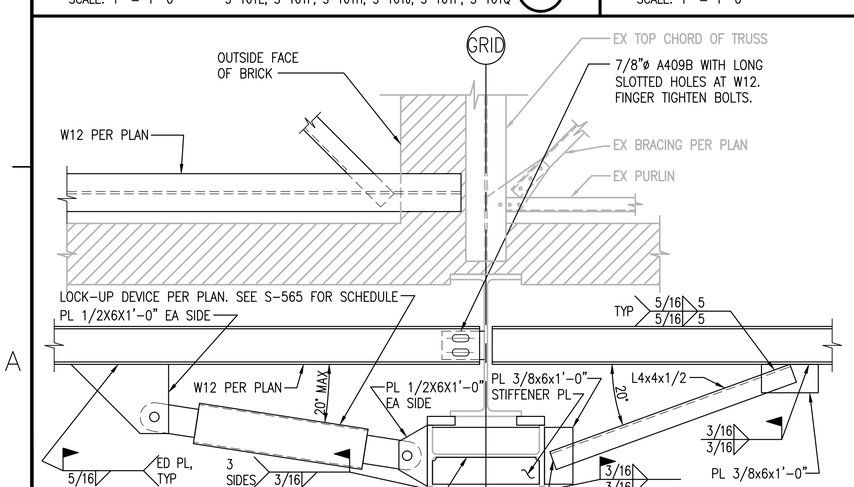

DETAIL - CHORD CONN W/ LOCK-UP DEVICE

SCALE: 3/4" = 1'-0" 1 S-131E, S-131F, S-131H, 1 S-131J, S-131P, 1 S-131Q (K)

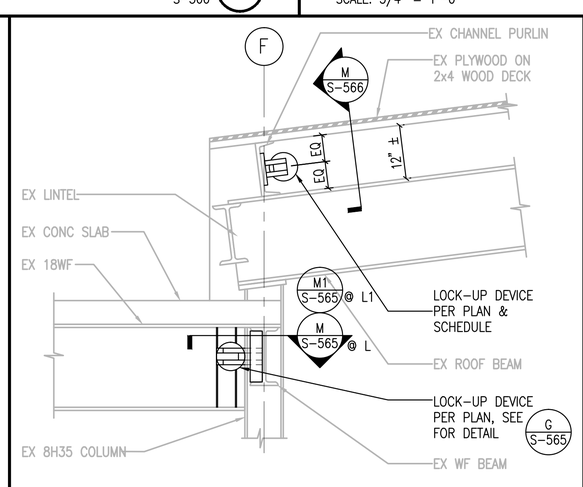

SECTION - THERMAL EXPANSION JOINT

SCALE: 3/4" = 1'-0" 1 S-121D, S-121G, S-121N (L) (L1)

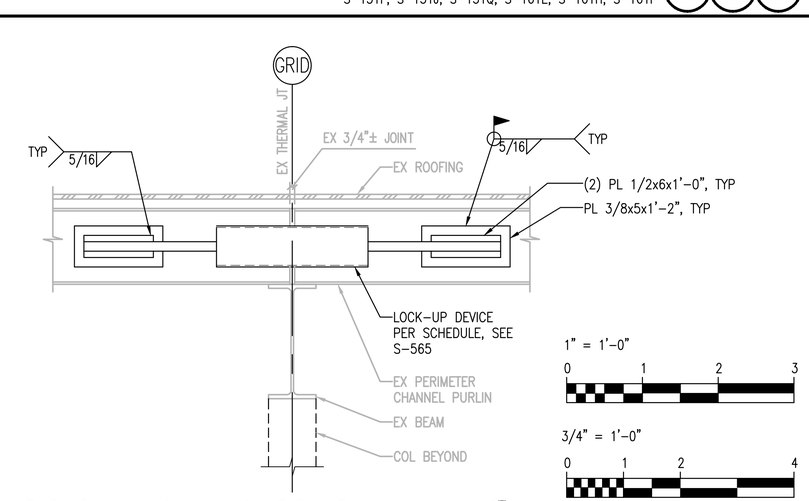

SECTION - THERMAL EXPANSION JOINT

SCALE: 1" = 1'-0" S-566 (M)

1/16/2015

SYM	DESCRIPTION	DATE	APPR
1	AMENDMENT 0003	3/2015	JMH

NAVFAC

GREGORY L. VARNEY, STATE OF WASHINGTON, 25842, STRUCTURAL ENGINEER, PROFESSIONAL ENGINEER, 17 MAR 15

SEAL

kpff Consulting Engineers
1601 Fifth Avenue, Suite 1600
Seattle, Washington 98101
(206) 622-5822 Fax (206) 622-8130

A/E INFO

APPROVED

FOR COMMANDER NAVFAC

ACTIVITY

SATISFACTORY TO DATE

DES JMH DRW JBB CHK GLV

PM/DM

BRANCH MANAGER

CHIEF ENG/ARCH

FIRE PROTECTION

DEPARTMENT OF THE NAVY
NAVAL FACILITIES ENGINEERING COMMAND ~ NORTHWEST
NAVAL FACILITIES ENGINEERING COMMAND
NAVAL STATION - SILVERDALE, WASHINGTON
BREMERTON, WA
IPT
NAVAL BASE KITSAP - PSNS & IMF
SPECIAL PROJECT RM 09-1471
REPAIR INSIDE MACHINE SHOP, BUILDING 431
STEEL LOCK-UP DETAILS

SCALE: AS NOTED

EPROJECT NO.:

CONSTR. CONTR. NO.

NAVFAC DRAWING NO./PWD NO.
16027831/78478

SHEET 191 OF 318

S-566

DRAWFORM REVISION: 10 MARCH 2009

FILE NAME: T:\113000-113350\113283 (Building 431)\04 Details\78478_S566.dwg LAYOUT NAME: KPFF Plot Layout PLOTTED: Thursday, March 19, 2015 - 8:33am USER: johnh

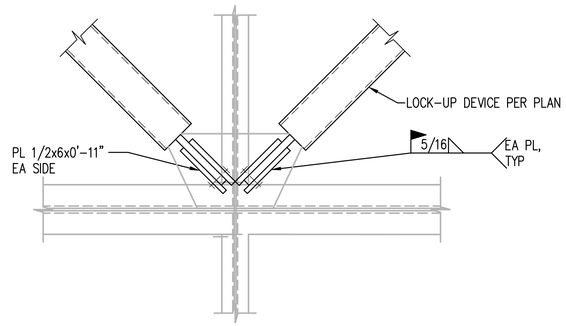

CONNECTION

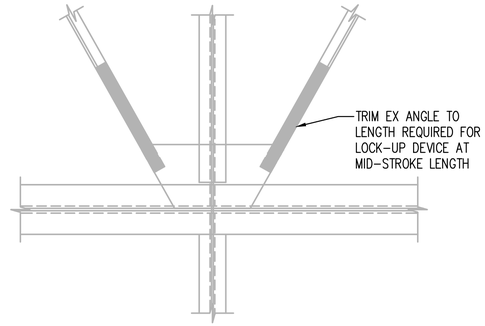

DEMO

LOCK-UP DEVICE DEMO DETAIL

SCALE: 3/4" = 1'-0"

S-566 (B)

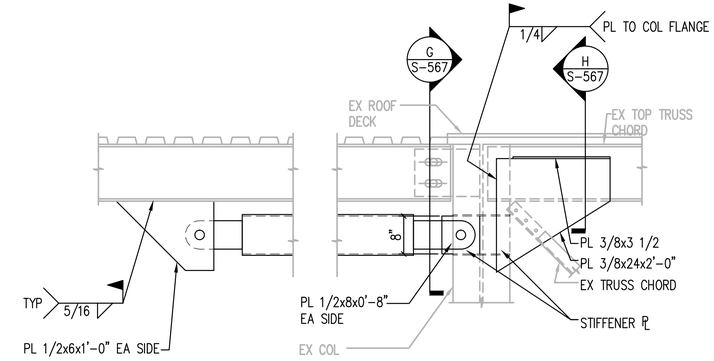

LOCK - UP DEVICE AT GL B

SCALE: 3/4" = 1'-0"

1 S-131F, S-131J, S-131Q (D)

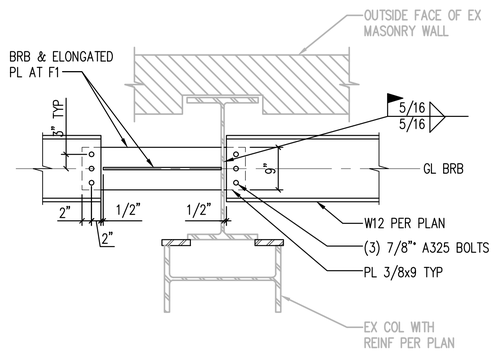

DRAG BEAM CONN

SCALE: 3/4" = 1'-0"

(F) (F1)

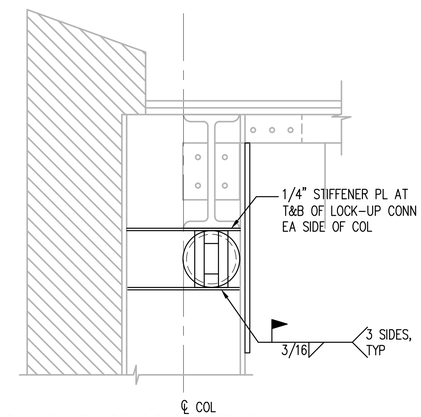

LOCK-UP DEVICE CONN DETAIL

SCALE: 1 1/2" = 1'-0"

S-567 (G)

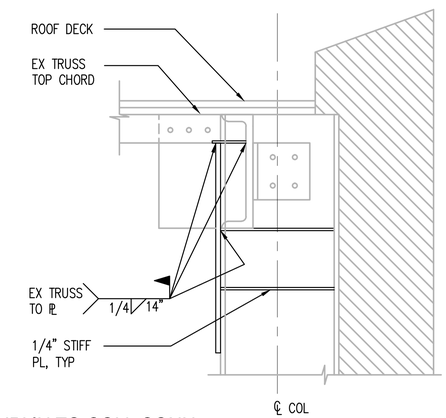

PURLIN TO COLL CONN

SCALE: 1 1/2" = 1'-0"

S-567 (H)

3/4" = 1'-0"

0 1 2 4

1/16/2015

SYM	DESCRIPTION	DATE	APPR
1	AMENDMENT 0003	3/2015	JMH

NAVFAC

GREGORY L. VARNEY, STATE OF WASHINGTON, 25842, PROFESSIONAL ENGINEER, 17 NOV 15

SEAL

kpff Consulting Engineers
1601 Fifth Avenue, Suite 1600
Seattle, Washington 98101
(206) 622-5822 Fax (206) 622-8130

A/E INFO

APPROVED

FOR COMMANDER NAVFAC

ACTIVITY

SATISFACTORY TO DATE

DES JMH DRW JBB CHK GLV

PM/DM

BRANCH MANAGER

CHIEF ENG/ARCH

FIRE PROTECTION

DEPARTMENT OF THE NAVY
NAVAL FACILITIES ENGINEERING COMMAND
IPT NAVAL FACILITIES ENGINEERING COMMAND ~ NORTHWEST
NAVAL STATION - SILVERDALE, WASHINGTON
NAVAL BASE KITSAP - PSNS & IMF
BREMERTON, WA
SPECIAL PROJECT RM 09-1471
REPAIR INSIDE MACHINE SHOP, BUILDING 431
STEEL LOCK-UP DETAILS

SCALE: AS NOTED

EPROJECT NO.:

CONSTR. CONTR. NO.

NAVFAC DRAWING NO./PWD NO.
16027832/78479

SHEET 192 OF 318

S-567

DRAWFORM REVISION: 10 MARCH 2009

FILE NAME: T:\113000-113350\113283 (Building 431)\04 Details\78479_S567.dwg LAYOUT NAME: KPFF Plot Layout PLOTTED: Thursday, March 19, 2015 - 8:33am USER: johnh

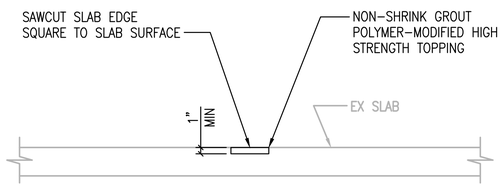

TYPICAL ELEVATED FLOOR SLAB REPAIR DETAIL (A)

NO SCALE

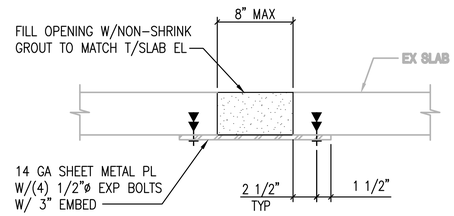

NOTE:
NON-SHRINK GROUT MAY BE PLACED IN EX EMBEDDED PIPE SLEEVES AS SHOWN ABOVE. IF SLEEVES EXTEND BELOW BOTTOM OF EX SLAB, THEY SHALL BE CUT FLUSH W/BOT OF SLAB OR REMOVED BY CORE DRILLING A 1"ø LARGER DIAMETER HOLE(±).

TYPICAL DETAIL AT ELEVATED SLAB OPENING INFILL 8" (B)

NO SCALE

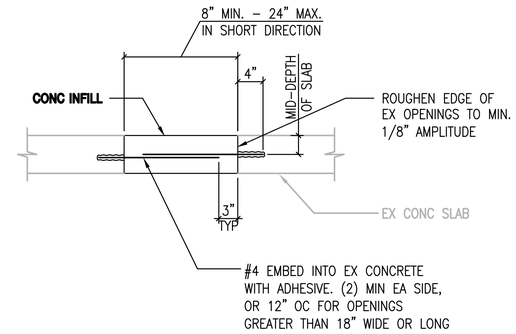

TYPICAL DETAIL AT ELEVATED SLAB OPENING INFILL 8" TO 24" (C)

NO SCALE

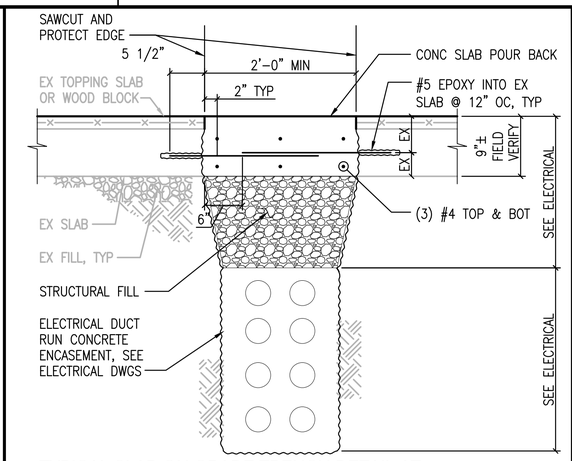

TYPICAL SLAB ON GRADE TRENCH DETAIL AT BELOW GRADE ELECTRICAL DUCT RUNS (D)

SCALE: 1" = 1'-0" S-111B, S-111C, S-111E, S-111F, S-111H, S-111J, S-111L, S-111M, S-111P, S-111Q

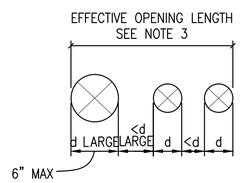

NOTES:
1. MAXIMUM CORE DRILL = 6"ø
2. THE CLEAR DISTANCE BETWEEN ADJACENT PENETRATIONS SHALL NOT BE LESS THAN THE GREATER OF 1/2x DIAMETER OF THE PENETRATION OR 2".
3. EFFECTIVE OPENING LENGTH = 1'-0"
4. LOCATE SLAB REINFORICING AND SUPPORTING STRUCTURE PRUIOR TO CORE DRILLING. DO NOT CUT REINFORCING OR SUPPORTING STRUCTURE.

TYPICAL DETAIL AT CORE DRILLING EX SLAB (E)

NO SCALE

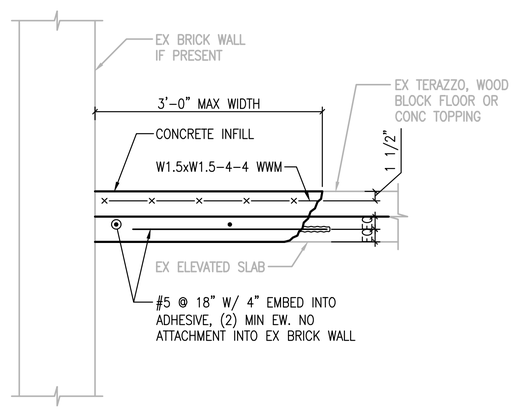

TYPICAL ELEVATED SLAB REPAIR (F)

SCALE: S-535, S-544

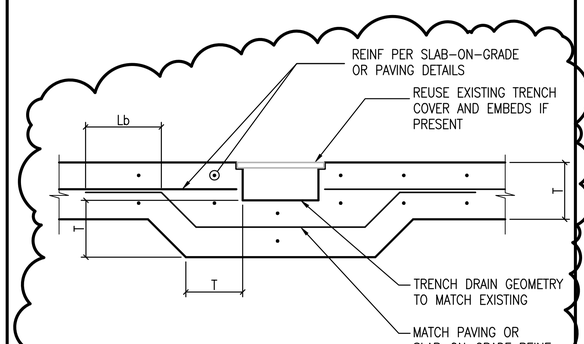

TYPICAL DETAIL AT TRENCH DRAINS (G)

NO SCALE

1

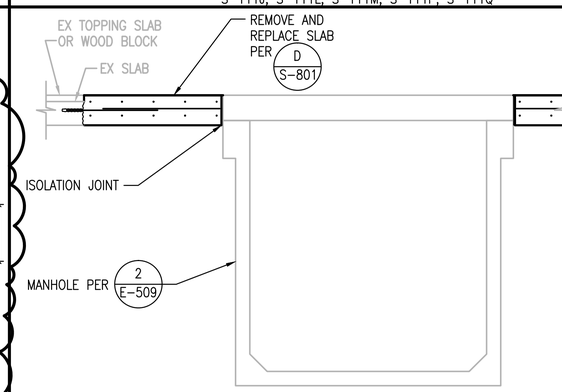

SECTION - MANHOLE AT BELOW GRADE ELECTRICAL DUCT RUNS (H)

SCALE: 3/4" = 1'-0" S-111B, S-111C, S-111F

1" = 1'-0" 0 1 2 3

1/2" = 1'-0" 0 2 4 6

1/16/2015

STM	DESCRIPTION	DATE	APPR
1	AMENDMENT 0003	3/2015	JMH

NAVFAC

GREGORY L. VARNEY, STATE OF WASHINGTON, 25842, STRUCTURAL ENGINEER, PROFESSIONAL ENGINEER, 17 MAR 15

SEAL

kpff Consulting Engineers
1601 Fifth Avenue, Suite 1600
Seattle, Washington 98101
(206) 622-5822 Fax (206) 622-8130

A/E INFO

APPROVED

FOR COMMANDER NAVFAC

ACTIVITY

SATISFACTORY TO DATE

DES JMH | DRW JBB | CHK GLV

PM/DM

BRANCH MANAGER

CHIEF ENG/ARCH

FIRE PROTECTION

DEPARTMENT OF THE NAVY
NAVAL FACILITIES ENGINEERING COMMAND
NAVAL FACILITIES ENGINEERING COMMAND ~ NORTHWEST
NAVAL STATION - SILVERDALE, WASHINGTON
EPT
NAVAL BASE KITSAP – PSNS & IMF
BREMERTON, WA

SPECIAL PROJECT RM 09-1471
REPAIR INSIDE MACHINE SHOP, BUILDING 431

TYPICAL CONCRETE SLAB DETAILS

SCALE: AS NOTED

EPROJECT NO.:

CONSTR. CONTR. NO.

NAVFAC DRAWING NO./PWD NO.: 16027879/78526

SHEET 239 OF 318

S-802

DRAWFORM REVISION: 10 MARCH 2009

FILE NAME: T:\113000-113350\113283 (Building 431)\04 Details\78526_S802.dwg LAYOUT NAME: KPFF Plot Layout PLOTTED: Wednesday, March 18, 2015 - 3:36pm USER: johnh

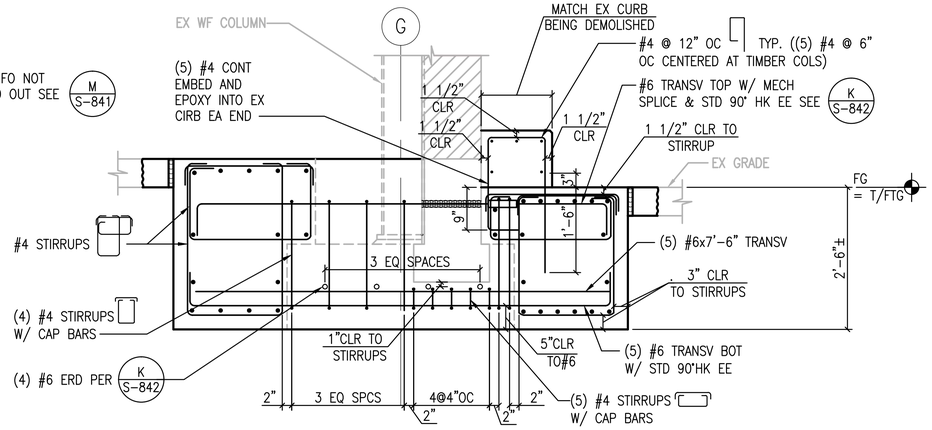

SECTION DETAIL

SCALE: 3/4" = 1'-0"

S-409, S-411, S-508, S-864, S-842 (B)

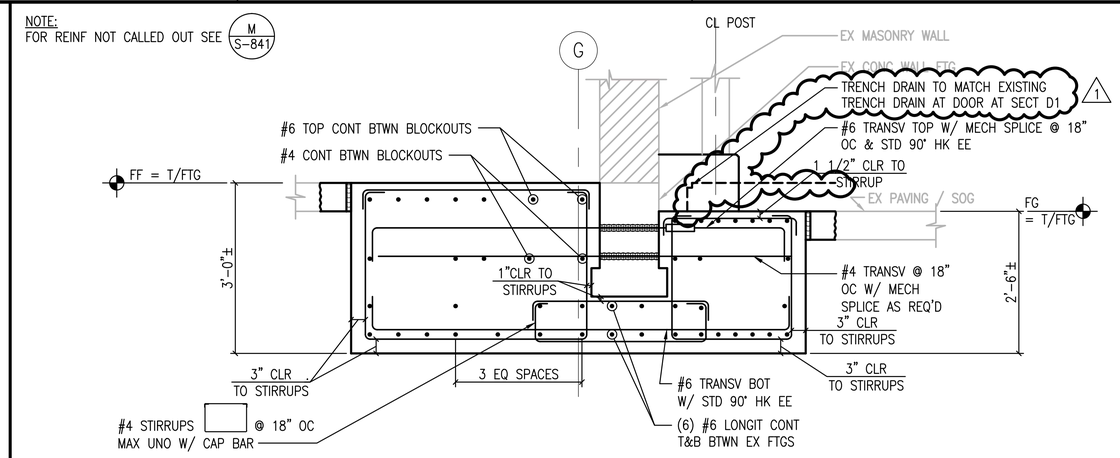

SECTION DETAIL

SCALE: 3/4" = 1'-0"

S-409, S-411, S-842, S-843 (D) (D1)

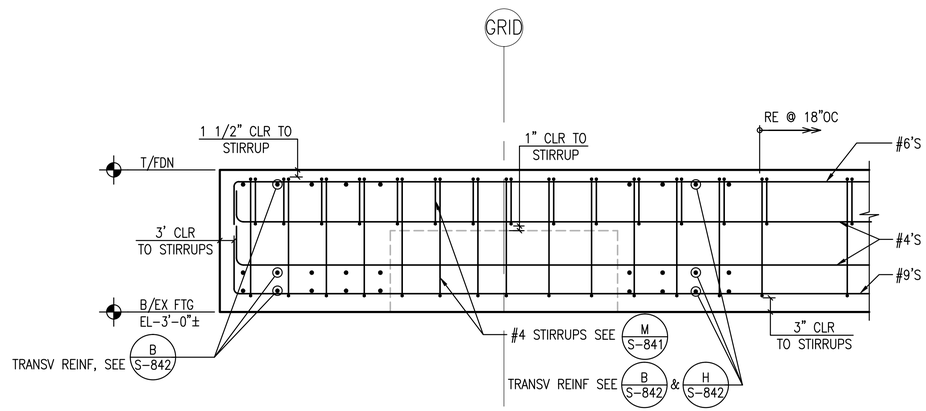

SECTION DETAIL

SCALE: 3/4" = 1'-0"

S-409, S-411 (F)

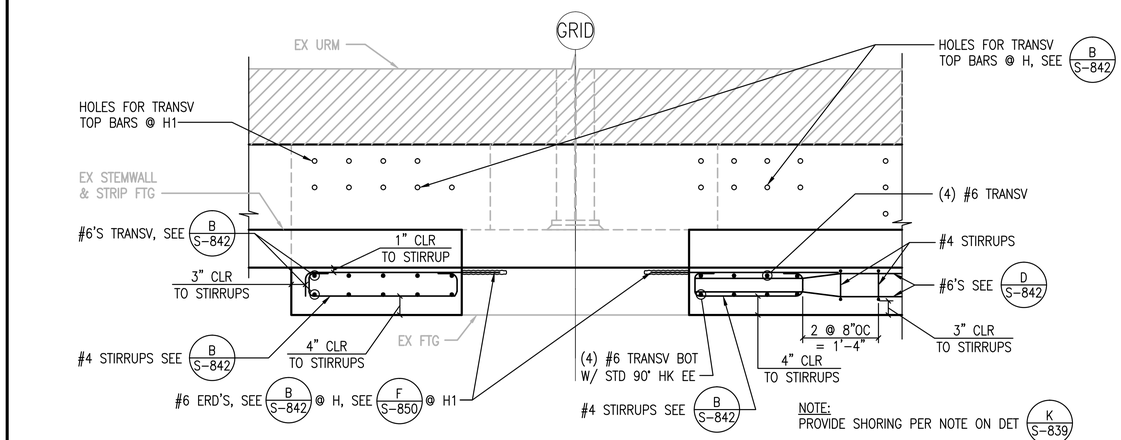

SECTION DETAIL

SCALE: 3/4" = 1'-0"

S-407, S-409, S-411, S-842 (H) (H1)

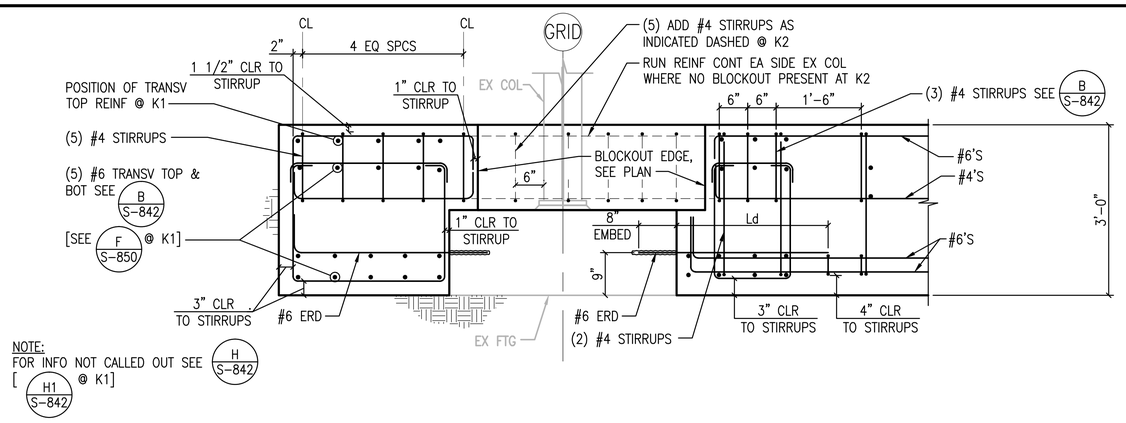

SECTION DETAIL

SCALE: 3/4" = 1'-0"

S-407, S-409, S-411, S-842 (K) (K1) (K2)

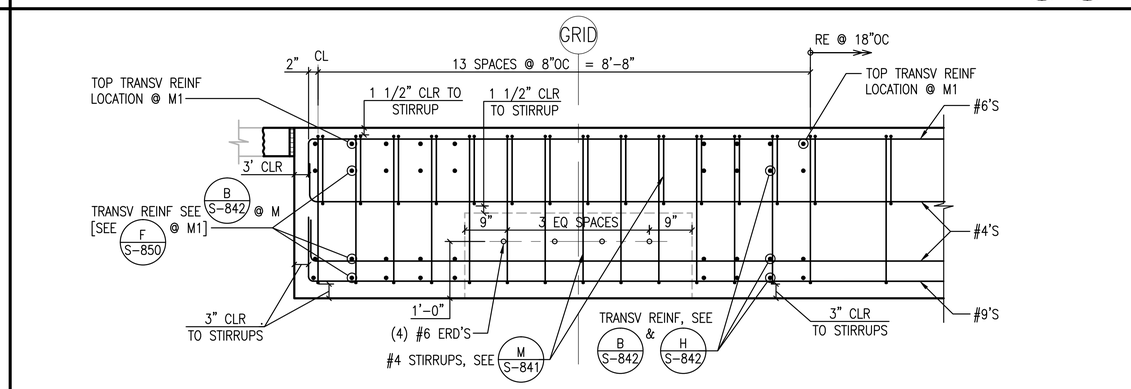

SECTION DETAIL

SCALE: 3/4" = 1'-0"

S-407, S-408, S-409, S-411, S-508 (M) (M1)

3/4" = 1'-0"

0 1 2 4

1/16/2015

SYM	DESCRIPTION	DATE	APPR
1	AMENDMENT 0003	3/2015	JMH

NAVFAC

GREGORY L. VERREY — STATE OF WASHINGTON — 25842 — STRUCTURAL ENGINEER — PROFESSIONAL ENGINEER — 17 MAR 15 — SEAL

kpff Consulting Engineers
1601 Fifth Avenue, Suite 1600
Seattle, Washington 98101
(206) 622-5822 Fax (206) 622-8130

A/E INFO

APPROVED

FOR COMMANDER NAVFAC

ACTIVITY

SATISFACTORY TO DATE

DES JMH DRW JBB CHK GLV

PM/DM

BRANCH MANAGER

CHIEF ENG/ARCH

FIRE PROTECTION

DEPARTMENT OF THE NAVY
NAVAL FACILITIES ENGINEERING COMMAND
NAVAL FACILITIES ENGINEERING COMMAND – NORTHWEST
NAVAL STATION – SILVERDALE, WASHINGTON
BREMERTON, WA
NAVAL BASE KITSAP – PSNS & IMF
SPECIAL PROJECT RM 09-1471
REPAIR INSIDE MACHINE SHOP, BUILDING 431
FOUNDATION DETAILS

SCALE: AS NOTED

EPROJECT NO.:

CONSTR. CONTR. NO.

NAVFAC DRAWING NO./PWD NO.
16027916/78563

SHEET 276 OF 318

S-842

DRAWFORM REVISION: 10 MARCH 2009

FILE NAME: T:\113000-113350\113283 (Building 431)\04 Details\78563_S842.dwg LAYOUT NAME: KPFF Plot Layout PLOTTED: Wednesday, March 18, 2015 - 3:38pm USER: johnh

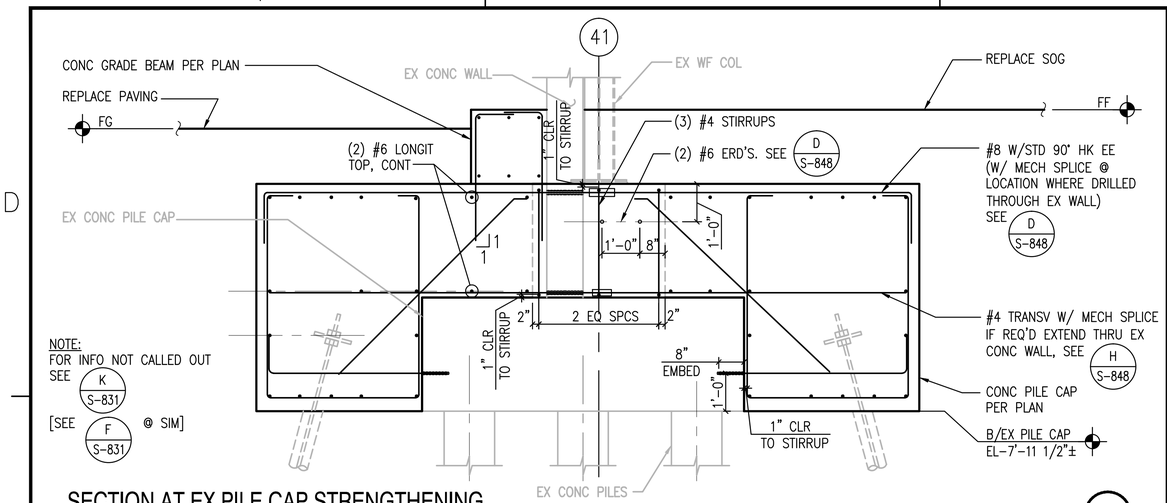

SECTION AT EX PILE CAP STRENGTHENING

SCALE: 1/2" = 1'-0"

S-404, S-846, S-848 (B)

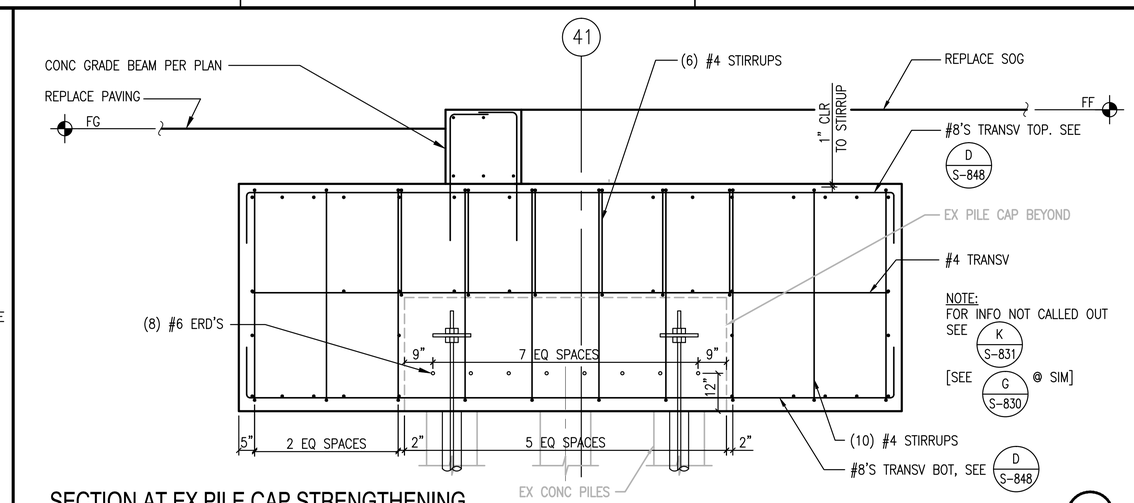

SECTION AT EX PILE CAP STRENGTHENING

SCALE: 1/2" = 1'-0"

S-404, S-846, S-848 (D)

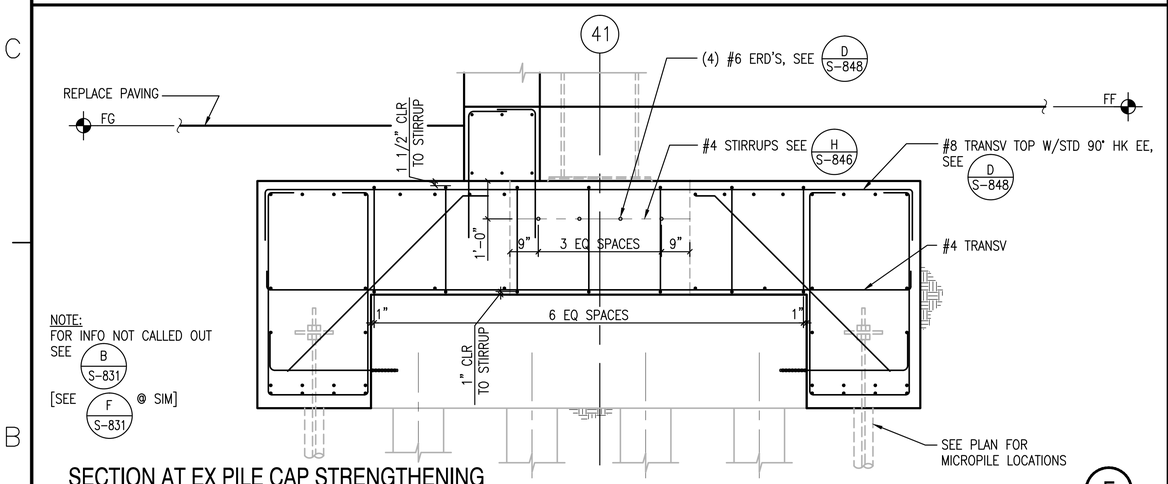

SECTION AT EX PILE CAP STRENGTHENING

SCALE: 1/2" = 1'-0"

S-401, S-404, S-846, S-848 (F)

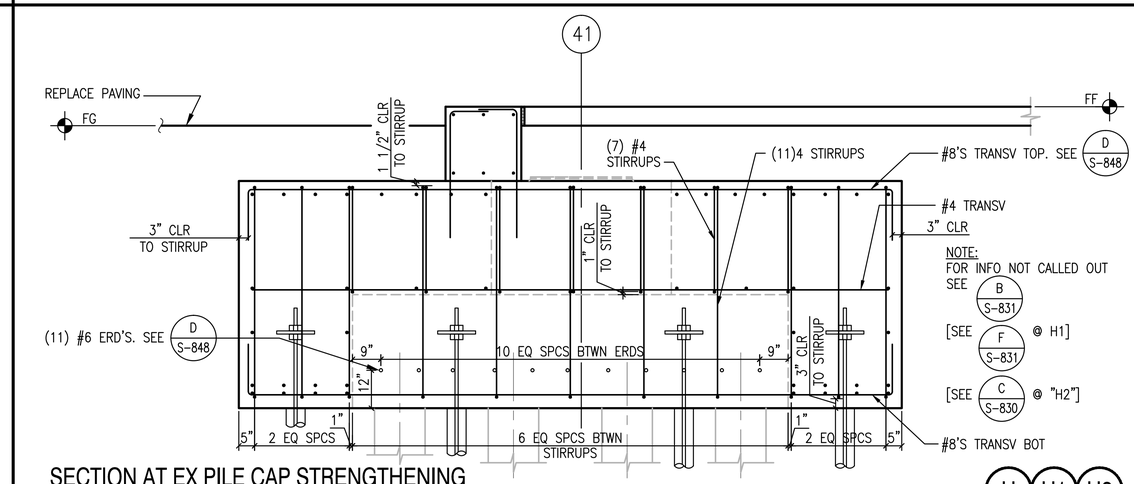

SECTION AT EX PILE CAP STRENGTHENING

SCALE: 1/2" = 1'-0"

S-401, S-404, S-846, S-848 (H) (H1) (H2)

NOTE:
FOR REINF NOT CALLED OUT SEE:
1. C S-830 & G S-830 FOR "K1"
2. B S-831 FOR "K2"

SECTION AT EX PILE CAP STRENGTHENING

SCALE: 1/2" = 1'-0"

S-401, S-404 S-846 (K) (K1) (K2)

1/2" = 1'-0"

0 2 4 6

1/16/2015

SYM	DESCRIPTION	DATE	APPR
1	AMENDMENT 0003	3/2015	JMH

NAVFAC

GREGORY L. VARNEY STATE OF WASHINGTON 25842 STRUCTURAL ENGINEER PROFESSIONAL ENGINEER 17 MAR 15

SEAL

kpff Consulting Engineers
1601 Fifth Avenue, Suite 1600
Seattle, Washington 98101
(206) 622-5822 Fax (206) 622-8130

A/E INFO

APPROVED

FOR COMMANDER NAVFAC

ACTIVITY

SATISFACTORY TO DATE

DES JMH DRW JBB CHK GLV

PM/DM

BRANCH MANAGER

CHIEF ENG/ARCH

FIRE PROTECTION

DEPARTMENT OF THE NAVY
NAVAL FACILITIES ENGINEERING COMMAND
NAVAL FACILITIES ENGINEERING COMMAND ~ NORTHWEST
NAVAL BASE KITSAP – PSNS & IMF
NAVAL STATION – SILVERDALE, WASHINGTON
BREMERTON, WA
IPT
SPECIAL PROJECT RM 09-1471
REPAIR INSIDE MACHINE SHOP, BUILDING 431
FOUNDATION DETAILS

SCALE: AS NOTED

EPROJECT NO.:

CONSTR. CONTR. NO.

NAVFAC DRAWING NO./PWD NO.
16027920/78567

SHEET 280 OF 318

S-846

DRAWFORM REVISION: 10 MARCH 2009

FILE NAME: T:\113000-113350\113283 (Building 431)\04 Details\78567_S846.dwg LAYOUT NAME: KPFF Plot Layout PLOTTED: Wednesday, March 18, 2015 - 3:38pm USER: johnh

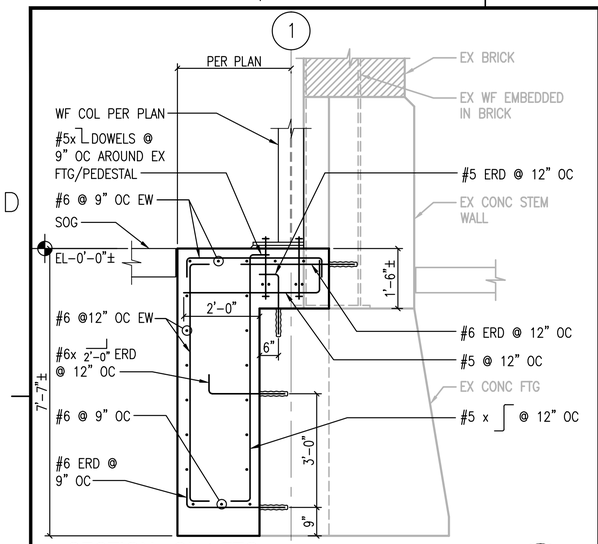

SECTION - GL 1 FTG

SCALE: 1/2" = 1'-0" S-415 (A)

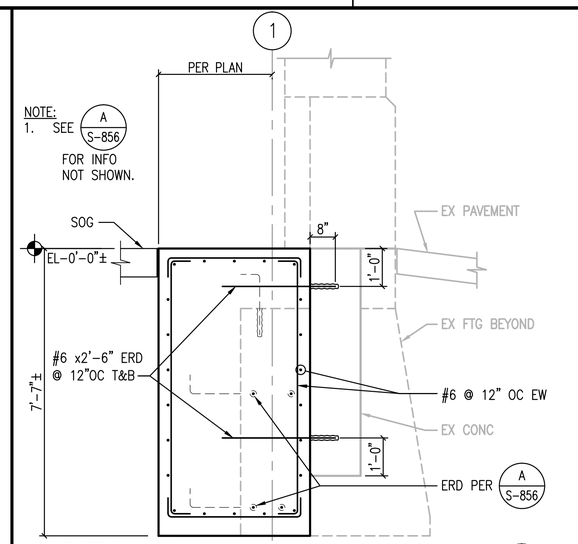

SECTION - GL 1 FTG

SCALE: 1/2" = 1'-0" S-415 (B)

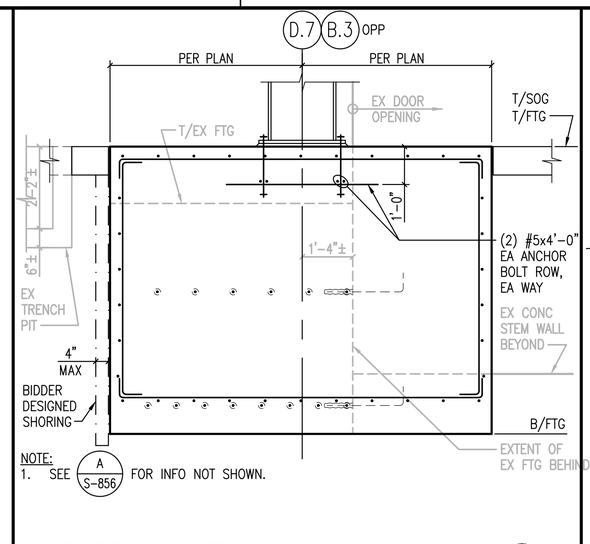

SECTION - GL 1 FTG

SCALE: 1/2" = 1'-0" S-415 (C)

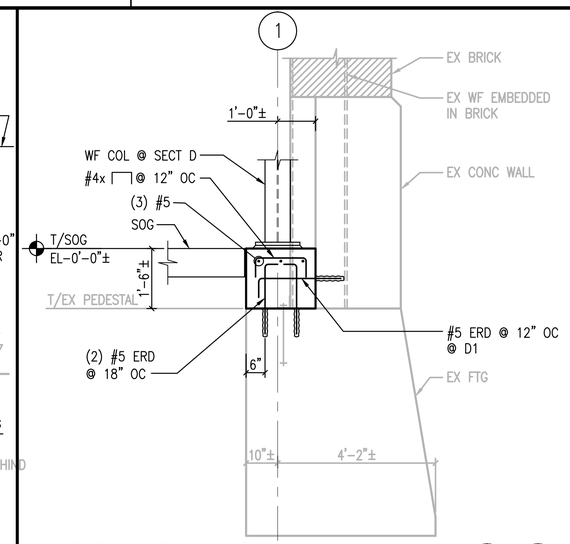

SECTION AT EX VAULT

SCALE: 1/2" = 1'-0" S-415 (D) (D1)

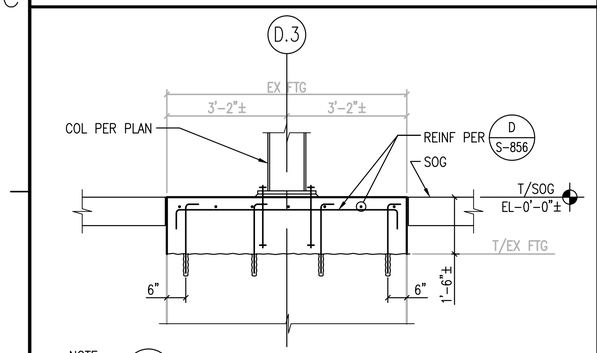

SECTION - GL 1 FTG

SCALE: 1/2" = 1'-0" S-415 (E)

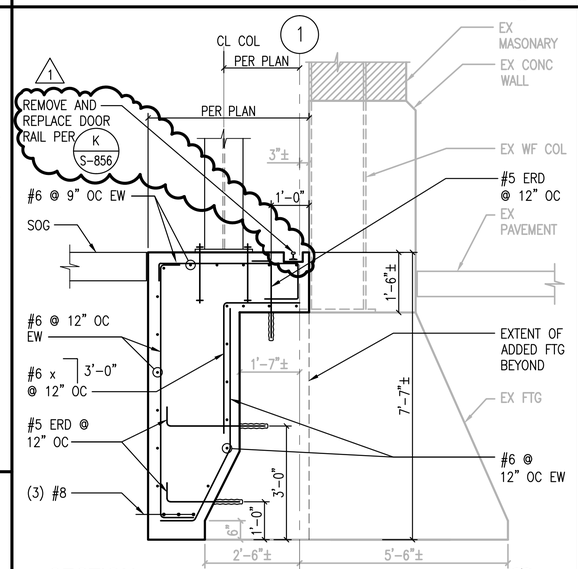

SECTION

SCALE: 1/2" = 1'-0" S-415 (F)

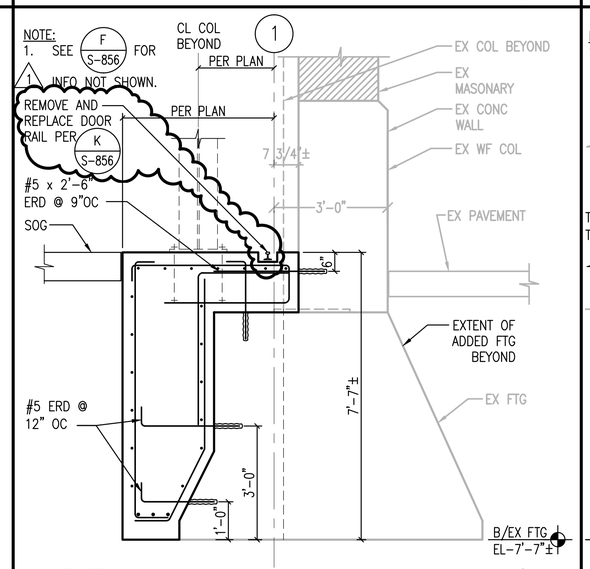

SECTION

SCALE: 1/2" = 1'-0" S-415 (G)

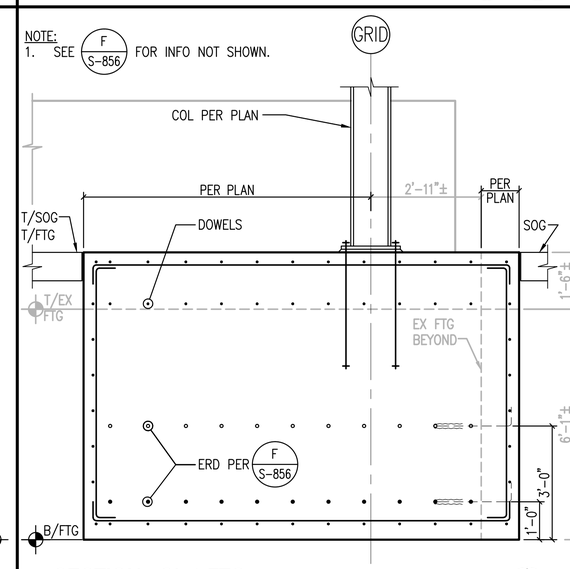

SECTION - GL 1 FTG

SCALE: 1/2" = 1'-0" S-415 (H)

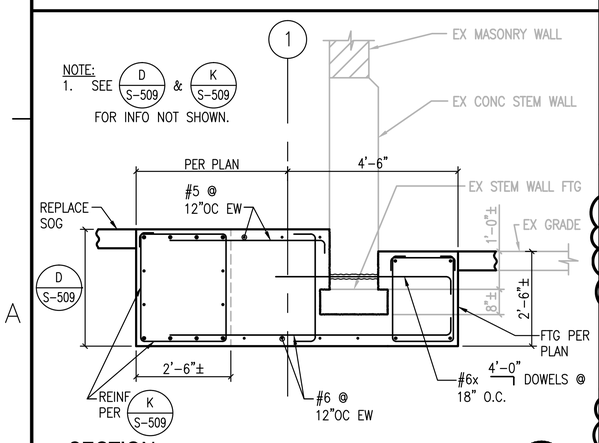

SECTION

SCALE: 1/2" = 1'-0" S-507, S-411 (J)

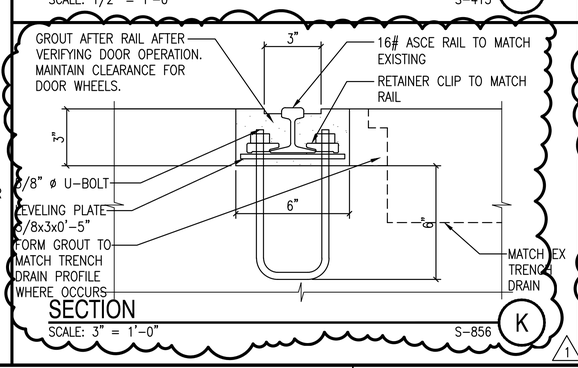

SECTION

SCALE: 3" = 1'-0" S-856 (K)

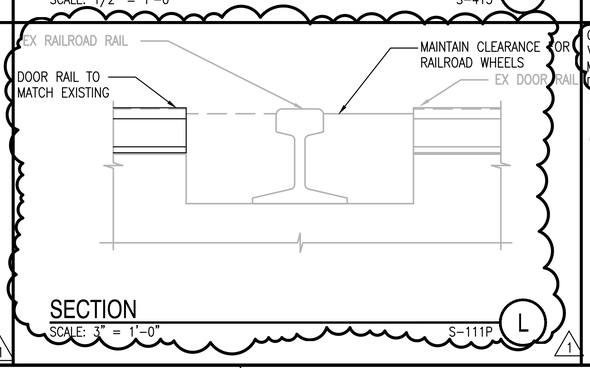

SECTION

SCALE: 3" = 1'-0" S-111P (L)

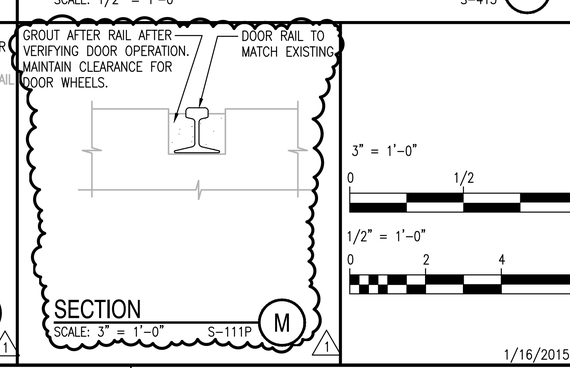

SECTION

SCALE: 3" = 1'-0" S-111P (M)

3" = 1'-0"

0 1/2 1

1/2" = 1'-0"

0 2 4 6

1/16/2015

SYM	DESCRIPTION	DATE	APPR
1	AMENDMENT 0003	3/2015	JMH

NAVFAC

SEAL: GREGORY L. VARNEY, STATE OF WASHINGTON, 25842, PROFESSIONAL ENGINEER, 17 NOV 15

kpff Consulting Engineers
1601 Fifth Avenue, Suite 1600
Seattle, Washington 98101
(206) 622-5822 Fax (206) 622-8130

A/E INFO

APPROVED

FOR COMMANDER NAVFAC

ACTIVITY

SATISFACTORY TO DATE

DES JMH DRW JBB CHK GLV

PM/DM

BRANCH MANAGER

CHIEF ENG/ARCH

FIRE PROTECTION

DEPARTMENT OF THE NAVY
NAVAL FACILITIES ENGINEERING COMMAND ~ NORTHWEST
NAVAL FACILITIES ENGINEERING COMMAND
NAVAL BASE KITSAP – PSNS & IMF
NAVAL STATION – SILVERDALE, WASHINGTON
BREMERTON, WA

SPECIAL PROJECT RM 09-1471
REPAIR INSIDE MACHINE SHOP, BUILDING 431

FOUNDATION DETAILS

SCALE: AS NOTED

EPROJECT NO.:

CONSTR. CONTR. NO.

NAVFAC DRAWING NO./PWD NO.
16027930/78577

SHEET 290 OF 318

S-856

DRAWFORM REVISION: 10 MARCH 2009

FILE NAME: T:\113000-113350\113283 (Building 431)\04 Details\78577_S856.dwg LAYOUT NAME: KPFF Plot Layout PLOTTED: Thursday, March 19, 2015 - 6:08pm USER: johnh

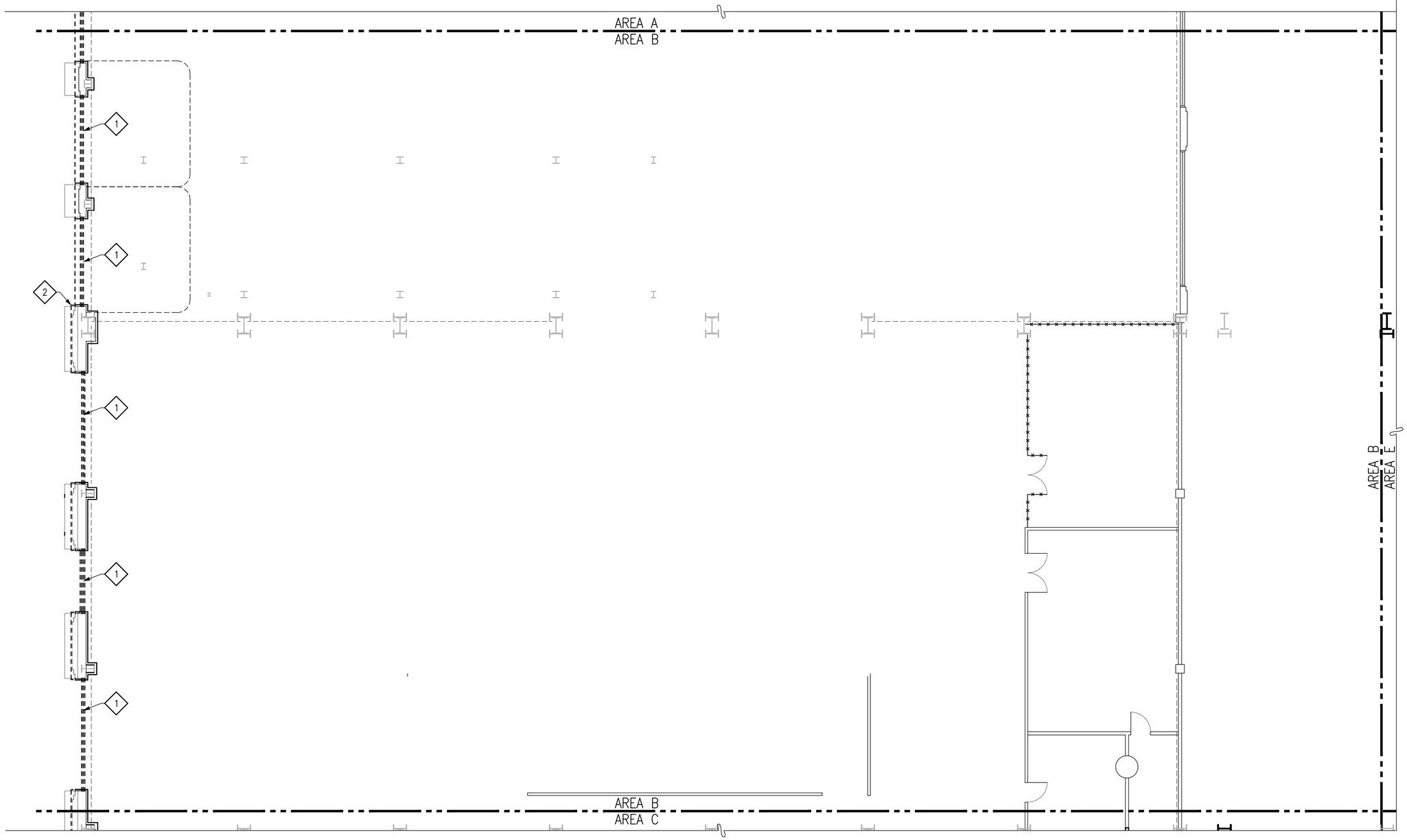

KEYNOTES

1. REMOVE WINDOW, METAL SIDING, METAL INSULATED PANELS AND SUPPORTING STRUCTURE IN CONC OPENING
2. REMOVE METAL SIDING AND METAL INSULATED PANELS AND SUPPORTING STRUCTURE OVER ENTIRE WALL

PARTIAL FOURTH FLOOR DEMO PLAN - AREA B

SCALE: 1/8"=1'-0"

PLAN NORTH

1/8" = 1'-0"

0 4 8 16 24

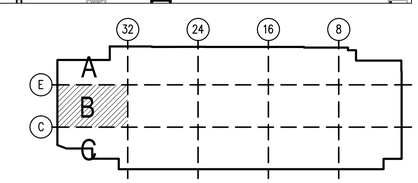

KEY PLAN

SCALE: NTS

PLAN NORTH

1/16/2015

SYM	DESCRIPTION	DATE	APPR

NAVFAC

4899 REGISTERED ARCHITECT
WALLACE S. FRASER
STATE OF WASHINGTON
SEAL

FRASER + FOGLE architects
11061 NE 2ND ST, STE 160
BELLEVUE, WA 98004
A/E INFO

APPROVED
FOR COMMANDER NAVFAC
ACTIVITY
SATISFACTORY TO DATE
DES JS DRW JS CHK WF
PM/DM
BRANCH MANAGER
CHIEF ENG/ARCH
FIRE PROTECTION

DEPARTMENT OF THE NAVY
NAVAL FACILITIES ENGINEERING COMMAND
NAVAL FACILITIES ENGINEERING COMMAND ~ NORTHWEST
NAVAL STATION – SILVERDALE, WASHINGTON
NAVAL BASE KITSAP – PSNS & IMF
BREMERTON, WA
SPECIAL PROJECT RM 09-1471
REPAIR INSIDE MACHINE SHOP, BUILDING 431
PARTIAL FOURTH FLOOR DEMO PLAN – AREA B

SCALE: AS NOTED
EPROJECT NO.:
CONSTR. CONTR. NO.
NAVFAC DRAWING NO./PWD NO.
16028016/78663
SHEET 58 OF 290
AD141B

DRAWFORM REVISION: 10 MARCH 2009

FILE NAME: J:\1102-03 B431 Seismic Upgrades\Drawings\78663_AD141B.dwg LAYOUT NAME: AD141B PLOTTED: Monday, January 26, 2015 – 3:35pm USER: WallyFraser

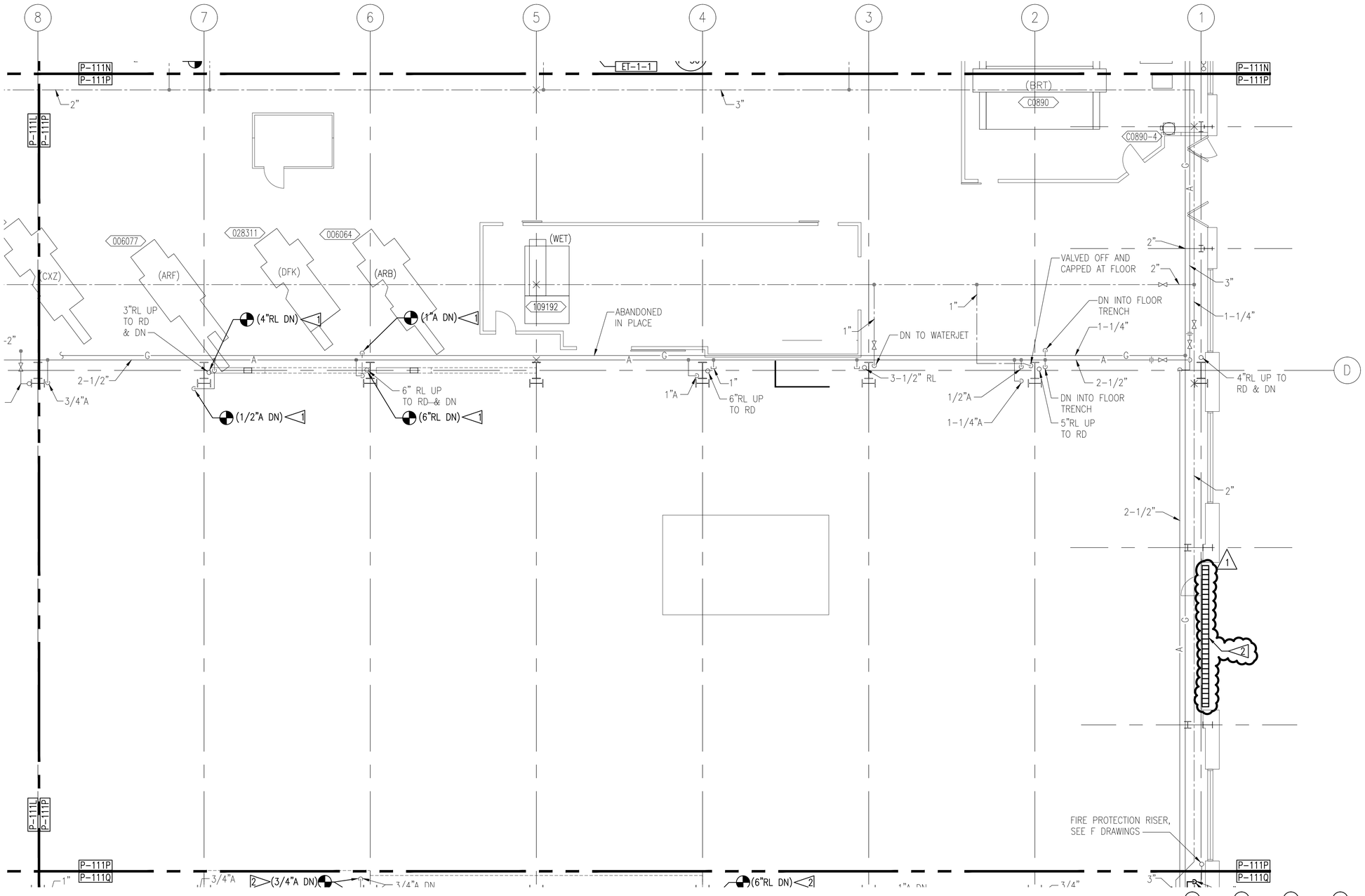

GENERAL NOTES:

1. EXISTING CONDITIONS WERE TAKEN FROM RECORD DRAWINGS AND SELECTIVE FIELD MEASUREMENTS, ACTUAL CONDITIONS AND DIMENSIONS OF PIPING, DUCTWORK AND OTHER APPURTENANCES ARE TO BE FIELD VERIFIED BY THE CONTRACTOR AND ADJUSTMENTS MADE AS REQUIRED.
2. REFER TO SHEET S-802 FOR TYPICAL CONCRETE SLAB REPAIR DETAILS.

FLAG NOTES:

1. PROVIDE PIPING UP TO 6'-0" AFF
2. REINSTALL EXISTING GRATE

PLUMBING FIRST FLOOR PLAN-AREA P

SCALE: 1/8"=1' 0"

1/8" = 1'-0"

0 4 8 16 24

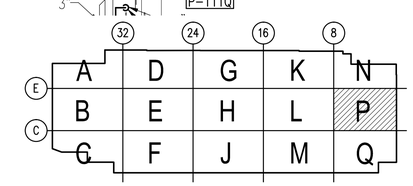

KEY PLAN

SCALE: NTS

1/16/2015

SYM	DESCRIPTION	DATE	APPR
1	AMENDMENT 0003	3/2015	BL

NAVFAC

BRADLEY A. LENTZ, STATE OF WASHINGTON, 47807, REGISTERED PROFESSIONAL ENGINEER

3/18/2015 SEAL

notkin mechanical engineers
www.notkin.com
telephone: 206.448.1911
facsimile: 206.448.9485
2301 5th Avenue, Suite 401
Seattle, WA 98121

Contact: Bradley A. Lentz, P.E.
notkin#: 213038
A/E INFO

APPROVED

FOR COMMANDER NAVFAC

ACTIVITY

SATISFACTORY TO DATE

DES BL DRW IR CHK TF

PM/DM

BRANCH MANAGER

CHIEF ENG/ARCH

FIRE PROTECTION

DEPARTMENT OF THE NAVY
NAVAL FACILITIES ENGINEERING COMMAND
BPT
NAVAL FACILITIES ENGINEERING COMMAND ~ NORTHWEST
NAVAL STATION – SILVERDALE, WASHINGTON
NAVAL BASE KITSAP – PSNS & IMF
BREMERTON, WA

SPECIAL PROJECT RM 09-1471
REPAIR INSIDE MACHINE SHOP, BUILDING 431

PLUMBING FIRST FLOOR PLAN–AREA P

SCALE: AS NOTED

EPROJECT NO.:

CONSTR. CONTR. NO.

NAVFAC DRAWING NO./PWD NO.
16028359/79006

SHEET 111 OF 276

P-111P

DRAWFORM REVISION: 10 MARCH 2009

FILE NAME: C:\Users\jr\appdata\local\temp\AcPublish_26184\79006_P-111P.dwg LAYOUT NAME: P-111P PLOTTED: Wednesday, March 18, 2015 – 10:46am USER: jr
L:\PROJECTS\21303 - Navy - 11- D007 PSNS FY14 8431 Seismic Upgrade\Drawings\79006_P-111P.dwg, 3/18/2015 10:45:59 AM, ir

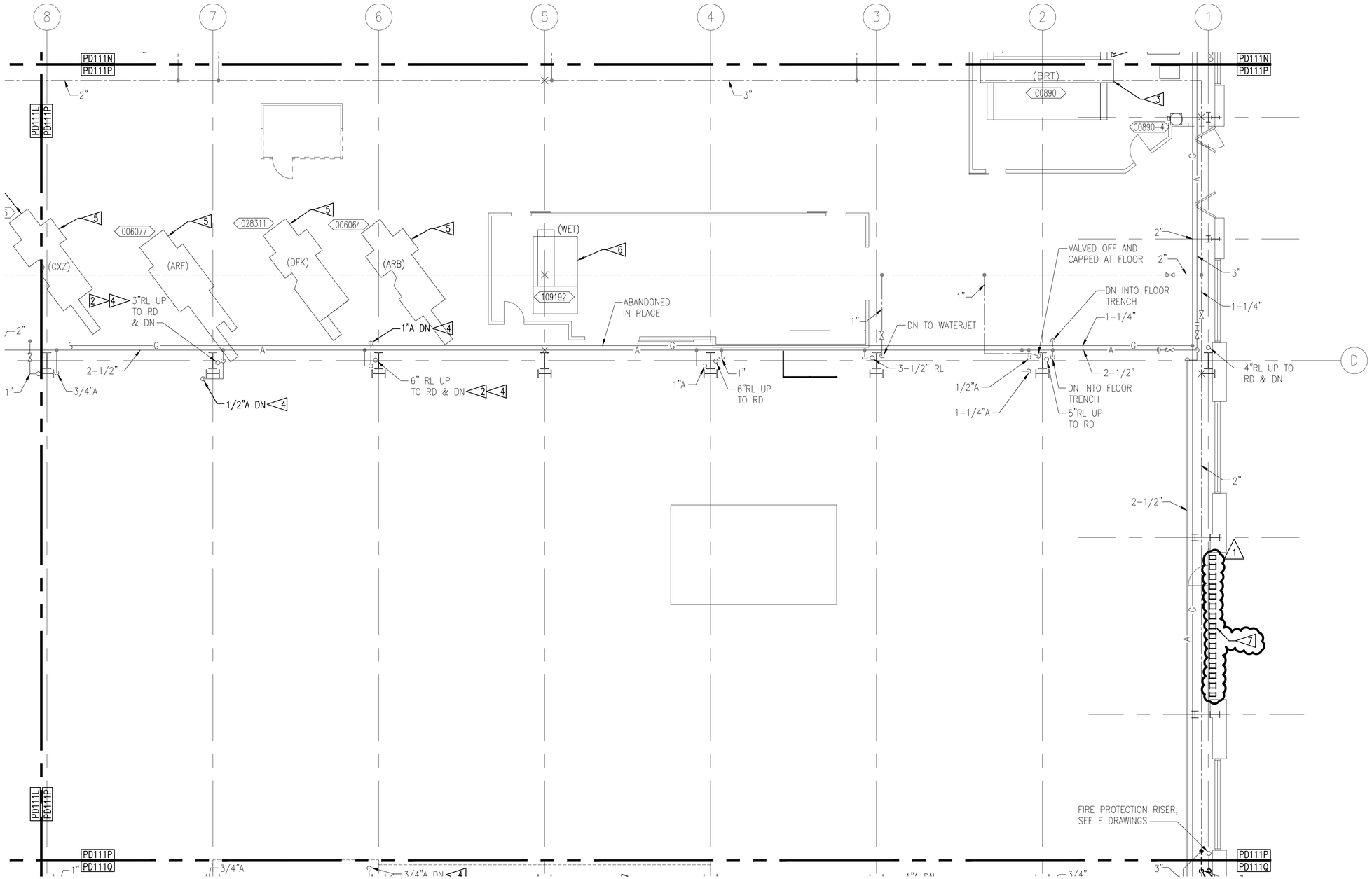

GENERAL NOTES:

1. EXISTING CONDITIONS WERE TAKEN FROM RECORD DRAWINGS AND SELECTIVE FIELD MEASUREMENTS, ACTUAL CONDITIONS AND DIMENSIONS OF PIPING, DUCTWORK AND OTHER APPURTENANCES ARE TO BE FIELD VERIFIED BY THE CONTRACTOR AND ADJUSTMENTS MADE AS REQUIRED.
2. ITEMS SHOWN DARK SHALL BE DEMOLISHED. ITEMS SHOWN LIGHT ARE TO REMAIN.
3. ALL COMPRESSED AIR OUTLETS AND MANIFOLDS ASSOCIATED WITH PIPING BEING DEMOLISHED SHALL BE SALVAGED AND RETURNED TO GOVERNMENT.
4. REFER TO SHEET S-802 FOR TYPICAL CONCRETE SLAB REPAIR DETAILS.

FLAG NOTES:

1. NOT USED
2. PROVIDE TEMPORARY BYPASS TO MAINTAIN SERVICE DURING CONSTRUCTION.
3. DISCONNECT CW AND DRAIN UTILITIES AND RECONNECT AFTER STRUCTURAL WORK IS COMPLETE. SEE SHEET Q-111A.
4. DEMO PIPING UP TO 6'-0" ABOVE FLOOR
5. DISCONNECT COMPRESSED AIR FROM FLOOR OUTLET AND RECONNECT AFTER STRUCTURAL WORK IS COMPLETE. SEE SHEET A-112A
6. DISCONNECT COMPRESSED AIR, CW, AND DRAIN UTILITIES AND RECONNECT AFTER STRUCTURAL WORK IS COMPLETE. SEE SHEET Q-112B.
7. REMOVE GRATE AND REINSTALL IN SAME LOCATION AFTER FOOTING WORK IS COMPLETE. (1)

DEMOLITION-FIRST FLOOR PLAN-AREA P

SCALE: 1/8"=1' 0"

1/8" = 1'-0"

0 4 8 16 24

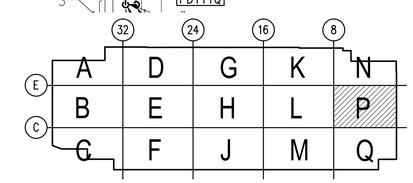

KEY PLAN

SCALE: NTS

1/16/2015

SYM	DESCRIPTION	DATE	APPR
1	AMENDMENT 0003	3/2015	BL

NAVFAC

BRADLEY A. LENTZ, STATE OF WASHINGTON, 47607, REGISTERED PROFESSIONAL ENGINEER

3/18/2015 SEAL

notkin
mechanical engineers
www.notkin.com
telephone: 206.448.1911
facsimile: 206.448.9485
2301 5th Avenue, Suite 401
Seattle, WA 98121

Contact: Bradley A. Lentz, P.E.
notkin#: 213038
A/E INFO

APPROVED

FOR COMMANDER NAVFAC

ACTIVITY

SATISFACTORY TO DATE

DES BL DRW IR CHK TF

PM/OM

BRANCH MANAGER

CHIEF ENG/ARCH

FIRE PROTECTION

DEPARTMENT OF THE NAVY
NAVAL FACILITIES ENGINEERING COMMAND
NAVAL FACILITIES ENGINEERING COMMAND – NORTHWEST
NAVAL BASE KITSAP – PSNS & IMF
NAVAL STATION – SILVERDALE, WASHINGTON
BREMERTON, WA

SPECIAL PROJECT RM 09-1471
REPAIR INSIDE MACHINE SHOP, BUILDING 431

DEMOLITION–FIRST FLOOR PLAN–AREA P

SCALE: AS NOTED

EPROJECT NO.:

CONSTR. CONTR. NO.

NAVFAC DRAWING NO./PWD NO.
16028305/78952

SHEET 57 OF 276

PD111P

DRAWFORM REVISION: 10 MARCH 2009

FILE NAME: L:\PROJECTS\213038 - Navy - 11- 0007 PSNS FY14 B431 Seismic Upgrade\Drawings\78952_PD111P.dwg LAYOUT NAME: PD111P PLOTTED: Wednesday, March 18, 2015 - 10:40am USER: ir

L:\PROJECTS\213038 - Navy - 11- 0007 PSNS FY14 B431 Seismic Upgrade\Drawings\78952_PD111P.dwg, 3/18/2015 10:40:34 AM, ir