ASTM C1107/C1107M	(2014) Packaged Dry, Hydraulic-Cement Grout (Nonshrink)
ASTM C1152/C1152M	(2004; E 2012; R 2012) Acid-Soluble Chloride in Mortar and Concrete
ASTM C1157/C1157M	(2011) Hydraulic Cement
ASTM C1202	(2012) Electrical Indication of Concrete's Ability to Resist Chloride Ion Penetration
ASTM C1218/C1218M	(1999; R 2008) Water-Soluble Chloride in Mortar and Concrete
ASTM C1240	(2014) Silica Fume Used in Cementitious Mixtures
ASTM C1260	(2014) Potential Alkali Reactivity of Aggregates (Mortar-Bar Method)
ASTM C1293	(2015) Determination of Length Change of Concrete Due to Alkali-Silica Reaction
ASTM C138/C138M	(2014) Density ("Unit Weight"), Yield, and Air Content (Gravimetric) of Concrete
ASTM C143/C143M	(2012) Slump of Hydraulic-Cement Concrete
ASTM C150/C150M	(2012) Portland Cement
ASTM C1567	(2013) Potential Alkali-Silica Reactivity of Combinations of Cementitious Materials and Aggregate (Accelerated Mortar-Bar Method)
ASTM C157/C157M	(2008; E 2014) Length Change of Hardened Hydraulic-Cement Mortar and Concrete
ASTM C1602/C1602M	(2012) Mixing Water Used in Production of Hydraulic Cement Concrete
ASTM C1610/C1610M	(2010) Static Segregation of Self-Consolidating Concrete Using Column Technique
ASTM C1611/C1611M	(2014) Slump Flow of Self-Consolidating Concrete
ASTM C1621/C1621M	(2009b) Standard Test Method for Passing Ability of Self-Consolidating Concrete by J-Ring
ASTM C171	(2007) Standard Specification for Sheet Materials for Curing Concrete
ASTM C172/C172M	(2014) Standard Practice for Sampling Freshly Mixed Concrete
ASTM C173/C173M	(2014) Standard Test Method for Air Content of Freshly Mixed Concrete by the Volumetric Method

c. Cement and Concrete Reference Laboratory (CCRL) inspected.

1.6.3 Laboratory and Testing Facilities and Accreditations

Provided by and at the expense of the Contractor as follows.

a. General: Currently accredited in accordance with ASTM C1077, including ASTM C78/C78M and ASTM C1260 including the required test methods, as specified.

b. Aggregate Testing and Mix Proportioning: Performed under the direction of a licensed civil engineer in a United States, who shall sign all reports and designs.

c. Acceptance Testing: Furnish all materials, labor, and facilities required for molding, curing, testing, and protecting test specimens at the site and in the laboratory. Furnish and maintain boxes or other facilities suitable for storing and curing the specimens at the site while in the mold within the temperature range stipulated by ASTM C31/C31M.

d. Contractor Quality Control: Perform all sampling and testing using an approved, onsite, independent, accredited laboratory.

1.7 CONCRETE DURABILITY

1.7.1 Concrete Mixture Proportions

At least 60 days prior to concrete placement, submit concrete mixture proportions, ingredient material certificates and test data, and trial batch test data for each class of concrete proposed for use on the project. Clearly indicate where each mixture will be used when more than one mixture is submitted. Obtain approval from Contracting Officer prior to placement.

1.7.2 Concrete Design Requirements

Proportion concrete mixtures to meet the requirements listed in Table 1 in accordance with the procedures outlined in ACI 201.2R and ACI 211.1.

Develop the mixture proportions for concrete to produce the required compressive strength (f'cr), drying shrinkage, and constructability for mixtures that have the potential to accomplish a structure with the design service life. Drying shrinkage testing need not be performed for concrete used in the precast stage 1 cap beams, nor the precast channel beams.

Table 1 - Concrete Design Requirements		
Prescriptive requirements	Minimum	Maximum
ASTM C666/C666M Method A Durability Factor at 300 cycles	90	--
Concrete ASTM C157/C157M Drying Shrinkage percent, as modified per ACI 364.3R at 28 days except for high volume fly ash (HVFA) at 56 days.	--	0.04 percent

1.7.4 Concrete Qualification Program

1.7.4.1 Fresh Concrete Properties

a. Air Content: Conform to the air limits specified in ACI 301 for exposure and the aggregate size used and tested in accordance with ASTM C231/C231M for air-entrained concrete.

b. Slump: Proportion each concrete mixture to have, at the point of deposit, a maximum slump of 4 inches as determined by ASTM C143/C143M when admixtures that affect slump are not used. Do not exceed 8 inches where an ASTM C494/C494M, Type F or G admixture is used. Comply with the requirements of ACI 117 for slump tolerances.

c. Self-Consolidating Concrete proportion and test for qualification using the following:

(1) ASTM C1611/C1611M, slump flow less than or equal to 24 inches, with visual stability index not greater than 1.

(2) ASTM C1621/C1621M, passing ability using the J-ring with spread within 1 inch less than the slump flow.

(3) Passing Ability Using the L-Box between 4 and 8 seconds.

(4) ASTM C1610/C1610M, static segregation less than 4.0 percent.

d. Underwater concrete: Placed using the tremie technique unless an alternate technique is approved by the Contracting ~~Offider~~Officer. Proportion concrete to be cohesive and flow with minimal segregation. Viscosity modifying admixtures are permitted for underwater concrete. Follow proportioning guidance in ACI 304R. Perform a trial placement and submit to the Contracting Officer for approval. Do not place concrete underwater prior to receiving approval.

1.7.4.2 Hardened Concrete Properties

a. Average Compressive Strength: Determine the minimum required average compressive strength denoted as f'cr for qualification of concrete mixtures and for quality acceptance testing. A compressive strength test result is defined as the mean of three properly conducted tests on 4 by 8 inch cylinders in accordance with ASTM C39/C39M. In addition, meet the following requirements.

(1) Specified Compressive Strength: Denoted as f'c, the design strength at 28 days except use 56 days for concrete containing 50 percent or more fly ash.

(2) Required Average Strength: Proportion concrete such that f'cr exceeds f'c per ACI 301.

(3) f'cr may not exceed f'c at the same age by more than 20 percent unless approved by the Contracting Officer. Precast elements, including the channel beams, stage 1 cap beams, small craft floats, and water quality catch basins, may exceed the concrete strength by 20 percent.

b. Water Soluble Chloride Ion Content: Determine the chloride ion content only for qualification of concrete mixtures. Determine water soluble chloride ion content in accordance with ASTM C1218/C1218M. The limits for allowable water-soluble chloride ion concentrations in hardened concrete are listed in Table 3.

c. Moist curing duration for concrete placed underwater: Ten (10) days.

d. Begin curing immediately after placement. Protect concrete from premature drying, excessively hot temperatures, and mechanical injury; and maintain minimal moisture loss at a relatively constant temperature for the period necessary for hydration of the cement and hardening of the concrete.

e. Precast concrete, cast in a PCI-certified plant, shall be cured in accordance with established curing procedures that have been submitted and approved by the Contracting Officer.

1.8.2.3 Form Removal Schedule

Submit schedule for form removal indicating element and minimum length of time for form removal. Submit technical literature of forming material or liner, form release agent, form ties, and gasketing to prevent leakage at form and construction joints. Provide a full description of materials and methods to be used to patch form-tie holes.

1.8.2.4 Concrete Placement and Compaction

a. Submit technical literature for equipment and methods proposed for use in placing concrete. Include concrete pumping or conveying equipment including type, size and material for pipe, valve characteristics, and the maximum length and height concrete will be pumped. Do not adjust any concrete mixture design to facilitate pumping.

b. Submit technical literature for equipment and methods proposed for vibrating and compacting concrete. Submittal shall include technical literature describing the equipment including vibrator diameter, length, frequency, amplitude, centrifugal force, and manufacturer's description of the radius of influence under load. Where flat work is to be cast, provide similar information relative to the proposed compacting screed or other method to ensure dense placement.

1.8.2.5 Concrete Structural and Service Life Report

Provide a Report inclusive of materials and methods used, test results, and the field test strength (fcr) for concrete that shows compliance with the structural and service life requirements.

1.8.2.6 Preconstruction Sampling and Testing of Materials

Performed by, and at the expense of, the Contractor. Use an approved commercial laboratory or, for cementitious materials and chemical admixtures, a laboratory maintained by the manufacturer of the material. Do not use material until notice of acceptance has been given by the Contracting Officer. The Contractor shall not be entitled to any additional payment or extension of time due to failure of any material to meet project requirements, or for any additional sampling or testing required. Additional tests may be performed by the Government at the discretion of the Contracting Officer; such Government testing will not relieve the Contractor of any testing responsibilities.

1.8.2.7 Material Safety Data Sheets

Submit Material Safety Data Sheets (MSDS) for all materials that are regulated for hazardous health effects. Post the MSDS at the construction site in locations readily visible to all Contractor personnel.

necessary so the report on file is not older than 6 months.

1.8.4.2.2 Fly Ash

Submit test results in accordance with ASTM C618 as a Class F fly ash with the following additional requirements.

a. The strength activity index at 28 days shall be at least 95 percent of the control.

b. The average particle size shall not exceed 6 microns.

c. The sum SiO_2 plus Al_2O_3 plus Fe_2O_3 shall be greater than 77 percent.

d. The loss on ignition does not exceed 2 percent.

Submit test results performed within 6 months of submittal date. Update this report during construction as necessary to assure that the report on file is never older than 6 months.

1.8.4.3 Silica Fume

Submit test results in accordance with ASTM C1240 for silica fume. Data shall be based upon tests performed within 6 months of submittal. Update this report during construction as necessary so the report on file is not older than 6 months.

1.8.4.4 Aggregates

Obtain aggregate samples in accordance with ASTM D75/D75M and that is representative of the materials to be used for the project. Submit test results for aggregate quality in accordance with ASTM C33/C33M, and the combined gradation curve proposed for use in the work and used in the mixture qualification, and ASTM C295/C295M for results of petrographic examination. Confirm that the potential for alkali-silica reaction are within allowable limits by conducting tests in accordance with ASTM C1260 or ASTM C1293. Submit results of all tests during progress of the work in tabular and graphical form as noted above, describing the cumulative combined aggregate grading and the percent of the combined aggregate retained on each sieve.

1.8.4.5 Admixtures

Submit test results in accordance with ASTM C494/C494M and ASTM C1017/C1017M for concrete admixtures, ASTM C260/C260M for air-entraining admixture, and manufacturer's literature and test reports for corrosion inhibitors and anti-washout admixture. Submitted data shall be based upon tests performed within 6 months of submittal. Submit certified copies of test results for the specific lots or batches to be used on the project. Test results shall be not more than 6 months old prior to use in the work. Update test results on file if older than 6 months. Chemical admixtures that have been in storage at the project site for longer than 6 months or that has been subjected to freezing shall be retested at the expense of the Contractor.

1.8.4.6 Portland Cement

Portland cement, ground granulated blast furnace (GGBF) slag, and fly ash will be accepted on the basis of manufacturer's certification of compliance, accompanied by mill test reports showing that the material in each shipment meets the requirements of the specification under which it is

furnished. Mill test reports shall be no more than 1 month old, prior to use in the work. Do not use cementitious material until notice of acceptance has been given by the Contracting Officer. Cementitious material may be subjected to check testing by the Government from samples obtained at the mill, at transfer points, or at the project site. If tests prove that a cementitious material that has been delivered is unsatisfactory, it shall be promptly removed at Contractor's expense from the site of the work. Cementitious material that has not been used within 6 months after testing shall be retested at the Contractor's expense and shall be rejected if test results are not satisfactory. Submit test results in accordance with ASTM C150/C150M portland cement and/or ASTM C595/C595M and ASTM C1157/C1157M for blended cement.

1.8.4.7 Testing During Construction

During construction, the Contractor is responsible for sampling and testing aggregates, cementitious materials, and concrete as specified herein. The Government will sample and test concrete and ingredient materials as considered appropriate. Provide facilities and labor as may be necessary for procurement of representative test samples. Testing by the Government shall not relieve the Contractor of the specified testing requirements.

1.8.4.8 Acceptability of Work

The materials and the structure itself will be accepted on the basis of testing by the Contractor and shall be in compliance with the criteria herein. The Government may make check tests at its expense to validate the results of the Contractor's testing. Testing performed by the Government shall not relieve the Contractor from the specified testing requirements.

PART 2 PRODUCTS

2.1 CONCRETE MIXTURE DESIGN

2.1.1 Minimum Mixture Design Requirements

TABLE 2

Concrete Type	Minimum 28 day Compressive Strength (psi)	Minimum Cement Content (pounds)	Minimum Cementitious Matetial Content (pounds)	Maximum Water To Cementitiou Material Ratio	Notes (see below
CLASS A	4000	420	540	0.45	
CLASS B	5000	505	625	0.40	(2), (3)
CLASS C	5000	505	625	0.40	(1), (2)
CLASS D	6000	564	684	0.38	(2), (3)
CLASS E	6000	564	684	0.38	(1),(2),(3)

NOTES
(1) ASTM C33/C33M coarse aggregate gradation No. 8. Gradation No. 7 is allowed for pile plugs and small craft floats, but not shear keys.
(2) Maximum Coulomb Rating = 1500 at 56 days in accordance with ASTM C1202
(3) Air entrainment = per ACI 301, Table 4.2.2.4 for severe exposure.

2.1.2 Additional Mixture Design Requirements

a. Develop the mixture proportions for marine concrete to produce f'c and to provide durability, workability, and mixture consistency to facilitate placement, compaction into the forms, and compaction around

concrete production and placement using silica fume. Use a High Range Water Reducer (HRWR) with silica fume.

2.2.5 Complementary Cementing Materials (Supplementary Cementitious Materials (SCM))

The concrete mixtures shall contain complementary cementitious materials whether or not the aggregates are found to be reactive in accordance with the subpart entitled "Aggregates". Concrete mixtures shall be designed and proportioned to meet the requirements for strength, constructability, shrinkage, and all other requirements of this specification section.

2.3 AGGREGATES

ASTM C33/C33M Class 4S, except as modified herein.

The quantities to be retained on each sieve may be adjusted only where available aggregates are elongated or slivered and cause interference with mix mobility, or available aggregate gradations do not comply with the 18-8 requirement. When necessary to satisfy local conditions and when permitted, the combined aggregate percentages may be changed to not more than 22 percent nor less than 6 percent retained on any individual sieve. The combined aggregates in the mixture (coarse, intermediate, and fine) shall be well graded with no more than 18 percent nor less than 8 percent of the combined aggregate retained on any individual sieve, unless satisfactory performance can be demonstrated. The No. 50 sieve may have less than 8 percent retained; sieves finer than No. 50 shall have less than 8 percent retained, and the coarsest sieve may have less than 8 percent retained. Use intermediate sizes for blending where necessary, to provide a well graded combined aggregate.

a. Provide gradation of individual aggregate sizes using standard concrete aggregate sieves including 1-1/2 inches, one inch, 3/4 inch, 1/2 inch, 3/8 inch, No. 4, No. 8, No. 16, No. 30, No. 50, and No. 100.

b. Provide aggregates for exposed concrete from one source. Aggregate reactivity shall be limited per the subpart entitled "Aggregates". Provide aggregate containing no deleterious material properties as identified by ASTM C295/C295M.

c. Where a size designation is indicated, that designation indicates the nominal maximum size of the coarse aggregate.

d. Aggregate tests shall be conducted within 6 months from the date of concrete mixture submittal.

e. Provide ASTM C1260, ASTM C1293, or ASTM C1567 test results conducted with 6 months of the submittal date showing the proposed coarse and fine aggregates are either innocuous to alkali silica reaction; or that reactivity has been mitigated by the proposed cementitious materials as modified herein. Conduct ASTM C1260 tests on each aggregate source separately. Fine and coarse aggregates to be used in all concrete shall be evaluated and tested for alkali-aggregate reactivity. Both coarse aggregate size groups shall be tested. Test results of the individual aggregates shall have a measured expansion equal to or less than 0.08 percent after 28 days of immersion in a 1M NaOH solution at 176 degrees.

f. Should the test data indicate an expansion of greater than 0.08

ratio surface paste that may be trapped in pockets between the form and the concrete. Maximum reuse is three times. Provide forms with a form treatment to prevent bond of the concrete to the forms. Use a controlled permeability form liner in strict accordance with the manufacturer's recommendations.

2.8 REINFORCEMENT

2.8.1 Reinforcing Bars

ACI 301 unless otherwise specified and shall meet the design yield strength and ductility requirements. Use Grade 60 deformed reinforcing bars meeting the requirements of ASTM A706/A706M typical; ASTM A767/A767M Class 1 galvanized where indicated. Galvanized reinforcing need not be chromate treated after galvanizing.

The reinforcing steel selected shall match the structural properties of the reinforcing steel specified. Alternative reinforcing bars shall have similar structural properties to the specified reinforcing bars and may be used with the approval of the Contracting Officer prior to use.

2.8.2 Spiral

ASTM A1064/A1064M, Grade 80 plain wire.

2.8.3 Mechanical Reinforcing Bar Connectors

ACI 301. Provide 125 percent minimum yield strength of the reinforcement bar. Coat connectors in accordance with the requirements of the reinforcing bars.

2.8.4 Headed Reinforcement

ASTM A970/A970M, with ASTM A706/A706M Grade 60 deformed reinforcing bars to manufacture the headed bars. Use only forged T-head type, with Class HA round heads.

2.9 ACCESSORY MATERIALS

2.9.1 Materials for Curing Concrete

2.9.1.1 Impervious Sheeting

ASTM C171; waterproof paper, clear or white polyethylene sheeting, or polyethylene-coated burlap.

2.9.1.2 Pervious Sheeting

AASHTO M 182 or carpet covering the free surface and kept continuously wet throughout the curing period.

2.9.2 Joint Sealants

2.9.2.1 Horizontal Surfaces

Horizontal surfaces are defined as all surfaces with a 3 percent maximum slope. ASTM D6690 or ASTM C920, Type M, Class 25, Use T.

3.8.1.4 Unit Weight Test

ASTM C138/C138M. Take concrete samples during concrete placement. Perform tests at commencement of concrete placement, when test cylinders are made, and for each batch (minimum) or every 50 cubic yards (maximum) of concrete.

3.8.2 Hardened Concrete Properties

Sample and test each lot at 100 cubic yards.

Cast and cure specimens in accordance with ASTM C172/C172M, ASTM C31/C31M, and applicable requirements of ACI 305R and ACI 306R.

For each lot, record the date and time sampled, the batch ticket code, cylinder ID code the location of placement, total volume of concrete represented by the sample, and fresh concrete properties; ASTM C143/C143M for slump or ASTM C1611/C1611M for slump flow and visual stability index (VSI), ASTM C231/C231M for air content, ASTM C1064/C1064M for temperature, and ASTM C138/C138M unit weight.

For each lot sample, cast twelve 6 by 12 inch cylinder specimens for strength. Package cylinders to prevent damage and ship priority mail to the approved testing laboratory.

3.8.2.1 Compressive Strength Tests

ACI 214R tests for compressive strength - conduct strength tests of concrete during construction in accordance with the following procedures:

a. Test cylinders in accordance with ASTM C39/C39M. Test three cylinders at 3 days, three cylinders at 7 days, and three cylinders at the age when the compressive strength requirement was specified. Hold the remaining three cylinders in storage. If one specimen in a test shows evidence of improper sampling, molding or testing, discard the specimen and consider the strength of the remaining cylinder to be the test result. If more than one specimen shows excess defects, the Contracting Officer may allow the entire test to be discarded. Test results shall not exceed the specified compressive strength by more than 20 percent for the age specified, except for the precast elements described in 1.7.4.2.

b. If the average strength test results are less than the specified strength f'c extract three core samples from the structure in accordance with ASTM C42/C42M, from the area that correlates to the low test results. These extracted cores shall not contain steel reinforcing. Repair core holes with non-shrink grout. Match color and finish of adjacent concrete. For concrete not meeting strength criteria the Contractor shall prepare a remediation strategy for the review by the Contracting Officer.

c. Provide strength test reports within 7 days of test completion.

3.8.2.2 Chloride Ion Concentration

Comply with ACI 318. Determine water soluble chloride ion concentration. Perform test once for each mix design. The limits for average chloride ion

content are provided in Table 3.

3.8.2.3 Non-Destructive Tests

Use of a rebound hammer to obtain data on the strength of the concrete surface shall be in accordance with ASTM C805/C805M. Test results from the rebound hammer and other non-destructive testing may be helpful in selecting areas to extract concrete cores for destructive testing.

3.8.3 Core Samples and Compressive Strength Testing

Obtain and test cores in accordance with ASTM C42/C42M.

Acceptance criteria for cylinder compressive strength are provided in subpart entitled "Acceptance of Concrete Strength".

Take at least three representative cores from each member or area of concrete in place that is considered potentially strength deficient. Impair the strength of the structure as little as possible. If, before testing, extracted cores show evidence of having been damaged subsequent to or during removal from the structure, take replacement cores.

Fill core holes with low slump concrete of a compressive strength equal to or greater than the original concrete.

The Contracting Officer will evaluate and validate core tests in accordance with the specified procedures.

3.8.4 Acceptance of Concrete Strength

3.8.4.1 Standard Molded and Cured Strength Specimens

Base the acceptance of concrete strengths on averages of results from three consecutive compressive strength tests. When the averages of all sets of three consecutive compressive strength test results are between 1.0 and 1.2 times the field test strength (fcr), and no individual strength test falls below fcr by more than 500 psi, the strength of the concrete is satisfactory. Also apply these criteria when accelerated strength testing is specified unless another basis for acceptance is specified. For the precast elements described in 1.7.4.2, there is no maximum on tested strength.

3.8.4.2 Non-Destructive Tests

Non-destructive tests may be used when permitted to evaluate concrete where standard molded and cured cylinders have yielded results not meeting the criteria.

3.8.4.3 Extracted Core Tests

When the average compressive strengths of the representative cores are between 0.85 fcr and 1.2 fcr and if no single core is less than 0.75 fcr, the strength of concrete is satisfactory. For the precast elements described in 1.7.4.2, there is no maximum on tested strength.

3.8.5 Inspection

ACI 311.4R. Inspect concrete placed under water with qualified divers approved by the Contracting Officer.

fasteners on accessories without backplates. Install accessories with sheet metal screws or wood screws in lead-lined braided jute, PTFE or neoprene sleeves, or lead expansion shields, or with toggle bolts or other approved fasteners as required by the construction. Install backplates in the same manner, or provide with lugs or anchors set in mortar, as required by the construction. Fasten accessories mounted on gypsum board and plaster walls without solid backing into the metal or wood studs or to solid wood blocking secured between wood studs, or to metal backplates secured to metal studs.

3.2 CLEANING

Clean material in accordance with manufacturer's recommendations. Do not use alkaline or abrasive agents. Take precautions to avoid scratching or marring exposed surfaces.

3.3 SCHEDULE

Accessories Required												
Room or Space	MG	PTD/W	TCSD	SD	SH	TTD	GB	SND	SC/SC	TP	FSS	MH
Male Head	5	2	5	2	8	5	~~5~~2	0	8	8	1	0
Female Head	2	1	2	1	2	2	2	1	2	2	1	0
Toilet	1	1	1	1	0	1	1	1	0	0	0	0
Janitor	0	0	0	0	0	0	0	0	0	0	0	1

-- End of Section --

1.3 SUSTAINABILITY REQUIREMENTS

Materials in this technical specification may contribute towards contract compliance with sustainability requirements. See Section 01 33 29 SUSTAINABILITY REPORTING for LEED documentation requirements for project LEED NC recycled content, light pollution reduction, optimize energy performance, controllability of systems - lighting, daylight, and views requirements.

1.4 SUBMITTALS

Government approval is required for submittals with a "G" designation; submittals not having a "G" designation are for Contractor Quality Control approval. Submittals with an "S" are for inclusion in the Sustainability Notebook, in conformance to Section 01 33 29 SUSTAINABILITY REPORTING. Submit the following in accordance with Section 01 33 00 SUBMITTAL PROCEDURES

SD-02 Shop Drawings

Installation; G

SD-03 Product Data

Window Shades; G SD-

04 Samples

Window Shades; G

SD-06 Test Reports

Window Shades

SD-08 Manufacturer's Instructions

Window Shades

SD-10 Operation and Maintenance Data

Window Shades Data Package 1

SD-11 Closeout Submittals

LEED Documentation; S

1.5 QUALITY ASSURANCE

1.5.1 Qualifications

1.5.1.1 Manufacturer's Qualifications

Obtain ~~motor-controlled~~ roller shades through one source from a single manufacturer with a minimum of twenty years' experience and minimum of three projects of similar scope and size in manufacturing products comparable to those specified in this section.

2.2 ABOVEGROUND PIPING SYSTEMS

Provide fittings for changes in direction of piping and for connections. Make changes in piping sizes through tapered reducing pipe fittings; bushings will not be permitted.

2.2.1 Galvanized Pipe and Fittings

NFPA 14, except as modified herein. Piping shall be Schedule 40 hot-dip galvanized steel. Fittings shall be threaded or cut grooved-end type. Plain-end fittings with mechanical couplings and fittings which use steel gripping devices to bite into the pipe when pressure is applied will not be permitted. Rubber gasketed cut grooved-end hot-dip galvanized pipe and fittings with hot-dip galvanized mechanical couplings with hot-dip galvanized nuts and bolts shall be ~~permitted~~provided. Fittings shall be UL Fire Prot Dir listed or FM APP GUIDE approved for use in dry pipe sprinkler systems. Fittings, mechanical couplings, and rubber gaskets shall be supplied by the same manufacturer. Steel piping with wall thickness less than Schedule 40 shall not be permitted. Pipe and fittings shall be hot-dip galvanized. Hot-dip galvanized pipe and fittings shall not be roll grooved. Use cut grooves where grooved hot-dip galvanized pipe and fittings are used. Cut grooves on hot-dip galvanized pipe and fittings shall be repaired by applying a zinc rich coating with a dry film thickness equivalent to the thickness of the hot-dip galvanized coating on the pipe and fittings. Prepare surface in accordance with coating manufacturer. Exposed threads on hot-dip galvanized pipe and fittings shall be repaired by applying a zinc rich coating with a dry film thickness equivalent to the thickness of the hot-dip galvanized coating on the pipe and fittings. Prepare surface in accordance with coating manufacturer. Provide rigid couplings at connections to flexible hoses specified in this Section.

2.2.2 Dielectric Unions and Dielectric Isolation Joints

2.2.2.1 Dielectric Unions

Dielectric unions shall be provided between threaded ferrous and nonferrous metallic pipe, fittings, and piping components. Dielectric unions shall prevent metal-to-metal contact of dissimilar metallic piping elements and shall be suitable for the required working pressure, temperature, and corrosive application.

2.2.2.2 Dielectric Isolation Joints

Isolation joints shall be provided between nonthreaded ferrous and nonferrous metallic pipe, fittings, and piping components. Isolation joints shall consist of an isolation gasket of the dielectric type, isolation washers, and isolation sleeves for flange bolts. Isolation gaskets shall be full faced with an outside diameter equal to the flange outside diameter. Bolt isolation sleeves shall be full length. Units shall be of a shape to prevent metal-to-metal contact of dissimilar metallic piping elements.

2.2.3 Pipe Hangers and Supports

Provide in accordance with NFPA 14. Hangers, supports, and anchor bolts shall be hot-dip galvanized. Hot-dip galvanize finish shall conform to the requirements of Section 05 50 13 MISCELLANEOUS METAL FABRICATIONS.

TABLE 2						
Piping Insulation Thickness (inch) Do not use integral wicking material in Chilled water applications exposed to outdoor ambient conditions in climatic zones 1 through 4.						
Service						
	Material	Tube And Pipe Size (inch)				
		<1	1-<1.5	1.5-<4	4-<8	> or = >8
Cold Domestic Water Piping, Makeup Water & Drinking Fountain Drain Piping						
	Cellular Glass	1.5	1.5	1.5	1.5	1.5
	Flexible Elastomeric Cellular	1	1	1	N/A	N/A
Hot Domestic Water Supply & Recirculating Piping (Max 200 F)						
	Cellular Glass	1.5	1.5	1.5	2	2
	Flexible Elastomeric Cellular	1	1	1	N/A	N/A
Tempered Water (Max 120 F)						
	Cellular Glass	1.5	1.5	1.5	2	2
	Flexible Elastomeric Cellular	1	1	1	N/A	N/A
Refrigerant Suction Piping (35 degrees F nominal)						
	Flexible Elastomeric Cellular	1	1	1	N/A	N/A
	Cellular Glass	1.5	1.5	1.5	1.5	1.5
Exposed Lavatory Drains, Exposed Domestic Water Piping & Drains to Areas for Handicapped Personnel						
	Flexible Elastomeric Cellular	0.5	0.5	0.5	0.5	0.5
Horizontal Roof Drain Leaders (Including Underside of Roof Drain Fittings)						
	Cellular Glass	1.5	1.5	1.5	1.5	1.5
	Flexible Elastomeric Cellular	1	1	1	N/A	N/A
Condensate Drain Located Inside Building						
	Cellular Glass	1.5	1.5	1.5	1.5	1.5
	Flexible Elastomeric Cellular	1	1	1	N/A	N/A
Cold Water and Pumped Waste Offshore Pier Piping						
	Cellular Glass	1.5	1.5	1.5	1.5	1.5
	Flexible Elastomeric Cellular	1	1	1	N/A	N/A
Diesel Fuel Piping						
	Flexible Elastomeric Cellular	1	1	1	1	1

3.2.2 Aboveground Cold Pipelines

The following cold pipelines for minus 30 to plus 60 degrees F, shall be insulated in accordance with Table 2 except those piping listed in

SECTION 31 62 16.19

STEEL PIPE PILES

PART 1 GENERAL

1.1 REFERENCES

The publications listed below form a part of this specification to the extent referenced. The publications are referred to in the text by the basic designation only.

AMERICAN PETROLEUM INSTITUTE (API)

API 5L	(2000) Line Pipe

ASTM International (ASTM)

ASTM A53	(2012) Pipe, Steel, Black and Hot-Dipped, Zinc-Coated, Welded, and Seamless
ASTM A252	(2010) Welded and Seamless Steel Pipe Piles
ASTM A572	(2007) High-Strength Low-Alloy Columbium-Vanadium Structural Steel
ASTM A709	(2011) Structural Steel for Bridges
ASTM D4945	(2008) High-Strain Dynamic Testing of Piles

AMERICAN WELDING SOCIETY (AWS)

AWS D1.1/D1.1M	(2010; Errata 2011) Structural Welding Code - Steel

1.2 SUBMITTALS

Government approval is required for submittals with a "G" designation; submittals not having a "G" designation are for information only or as otherwise designated. When used, a designation following the "G" designation identifies the office that will review the submittal for the Government. The following shall be submitted in accordance with Section 01 33 00, "Submittal Procedures."

SD-01 Preconstruction Submittals Pile driving inspector; G

SD-02 Shop Drawings

Splices;
Pile driving equipment;
Pile upper ring installation procedure; G
Pile driving plan; G

SD-05 Design Data

Pile driving analysis; G
CAPWAP analysis; G
Pile survey; G

SD-06 Test Reports

Non-destructive testing of pile splice welds;
Visual inspection of pile connection welds;
Pipe Weld NDT records;
Non-destruction testing of pile connection welds;

SD-07, Certificates

Fabricator's certification;
Mill certificates for pipe materials; G

SD-11 Closeout Submittals

Pile driving records; G
As-driven pile locations; G
Final Inspection Report; G

Submit complete and accurate pile driving records as specified in the paragraph "Pile Driving Records by the Contractor" and after completion of driving submit an inspection report as specified in the paragraph "Written Final Inspection Report by the Contractor".

1.3 BASIS FOR BIDS

Base bids on the number, size, and length of piles from tip to cutoff as indicated, including batter. Add 5 feet of additional length at each pile and add additional length as determined by the Contractor to account for cutoff of the driving ends as indicated on the drawings and for damage to the driving ends from installation. Should the total number of piles or number of each length vary from that specified as the basis for bidding, or the number of pile restrikes vary from that specified as the basis for bidding, the contract price will be adjusted in accordance with Contract Clause entitled "Changes." Adjustment in contract price will not be made for cutting off piles, for any portion of a pile remaining above the cutoff elevation, for over-driving piles, or for damaged or rejected piles.

1.4 HANDLING, DELIVERY, AND STORAGE

a. Protection: Use all means necessary to protect the materials of this section including coatings before, during and after installation and to protect the installed work and materials of all other trades.

b. Replacements: In the event of damage to piling or coatings, immediately make all repairs and replacements necessary to the approval of the Contracting Officer and its Technical Representative at no additional cost to the Government.

1.5 FABRICATOR'S CERTIFICATION

Manufacturer of steel pipe shall be certified by the Steel Plate Fabricator's Association (SPFA), or have a current ISO 9001 certification, when plates are used to fabricate pipe.

1.6 PILE DRIVING INSPECTOR

For inspection work, the Contractor shall employ a pile driving inspector with at least five years of experience in inspection of driving piles in a

marine environment. The individual's resume shall be submitted to the Contracting Officer for approval prior to the start of pile driving. If additional pile driving inspector(s) are required for the project then each inspector shall meet the requirements of this paragraph.

1.7 DYNAMIC PILE DRIVING ANALYSIS

Perform in accordance with ASTM D4945.

PART 2 PRODUCTS

2.1 PIPE MATERIAL

2.1.1 Pipe

Provide new, ASTM A252, Grade 3, seamless or welded pipe, with the additional requirement that the minimum yield strength of 50 ksi is required for all piles. Provide mill certificates for pipe materials. Pipe piling shall also conform to the following requirements.

2.1.2 Circumference

The outside circumference of each pipe end shall not vary by more than 0.375 inch from the corresponding diameter shown on the drawings.

2.1.3 Variation in Edge Alignment

The maximum allowable variation in edge alignment for adjacent steel pipe ends to be welded shall be 0.1875 times the wall thickness, but not more than 0.063 inch.

2.1.4 Straightness

Steel pipe straightness shall conform to the requirements of API 5L, Section 7.6, "Straightness."

2.1.5 Weld Processes

Welds made at a permanent manufacturing facility shall be performed by either an automatic fusion weld process or an electric resistance weld process. Welds shall have complete joint penetration.

2.1.6 Testing Requirements

One hundred percent of each longitudinal, circumferential, and spiral weld made at a permanent manufacturing facility shall receive non-destructive testing (NDT) by either radiographic, radioscopic, real time imaging systems or ultrasonic methods that are in conformance with the requirements of, AWS D1.1/D1.1M, ASTM A53, or API 5L. Submit pipe weld NDT records for this testing to the Contracting Officer.

2.1.7 Repair Requirements

Perform weld repairs in accordance withAWS D1.1/D1.1M, Section 6, for cyclically loaded non-tubular connections subject to tensile stress. Also perform additional NDT both sides of the repair for a length equal to 10 percent of the length of the pipe outside circumference. After the additional NDT is performed, and if more repairs are required that have a cumulative length equal to or more than 100 percent of the length of the

coatings are not damaged by any means. Inspect piles when delivered and repair all damage to coating systems prior to raising piles into the leads. Inspect piles when in the leads immediately before driving.

3.3 DRIVING EQUIPMENT

3.3.1 Impact Hammer

Use a diesel or hydraulic powered pile hammer with a capacity at least equal to the hammer manufacturer's recommendation for the total weight of pile and character of subsurface material to be encountered. For driving the 18-inch and 24-inch diameter piles, the hammer shall, at a minimum, be ~~provide a hammer~~ capable of delivering variable energy up to ~~107~~114,000 foot-pounds. For driving the 30 and 36 inch diameter piles to significant depth, the hammer shall, at a minimum, be ~~provide a hammer~~ capable of delivering variable energy up to 154,000 foot-pounds. Greater hammer energy capacities may be required to install piles to indicated tip elevations, and to meet other requirements of the contract. Select hammer(s) that obtain driving energy by use of a heavy ram and a short stroke with low impact velocity, rather than a light ram and a long stroke with high impact velocity. Select hammer(s) in excellent working order and capable of supplying at least 90 percent of the maximum rated energy specified by the manufacturer. Provide published characteristics for hammer(s) from which driving data may be obtained. Maintain variable energy setting adjustments for a hammer operable throughout the course of driving.

3.3.2 Hammer Cushion or Cap Block

Use a hammer cushion or cap block placed between the ram and the pile cap or drive cap with consistent elastic properties, that minimizes energy absorption, and that transmits hammer energy uniformly and consistently during the entire driving period. Do not use a pile cushion block.

3.3.3 Helmet

Use a suitable "helmet, "driving head," or "driving cap" fabricated of forged or cast steel, or approved alternate material, shaped to fit the particular pile being driven and designed for the particular hammer being used. Position the helmet between the pile and the hammer.

3.3.4 Leads

Use fixed lead pile drivers when driving with an impact hammer. The use of hanging or swinging leads will not be allowed unless they are so constructed that they can be held in a fixed position during the driving operations. It shall be acceptable to proof with an impact hammer, a pile previously driven to within one foot of tip elevation, provided that the hammer and leads are aligned with the axis of the pile. Provide leads of sufficient length so that the use of a follower is not necessary and that are adjustable for the driving of batter piling. Line leads with suitable materials to protect pile coatings from damage during pile installation.

3.3.5 Vibratory Hammer

Use a vibratory hammer for the initial installation of all piles. Maintain a rigid connection between the hammer and pile during driving. At a minimum, the~~Provide a~~ hammer shall have~~with~~ an eccentric moment of at least 5,700 inch-pounds, variable frequency of 400-1400 vibrations per minute and a centrifugal force of 160~~360~~ tons (short tons, 2,000 pounds per ton). A larger vibratory hammer may be required to install piles to indicated tip elevations, and to meet other requirements of the contract. Operate hammer at the rate(s) recommended by the manufacturer throughout the entire driving period. Use a driving template for the installation of each pile. In lieu of a template the Contractor may use fixed leads equipped to support the pile and vibratory hammer for the initial driving of each pile provided the equipment can maintain pile locations equal to those provided by a driving

template and within the driving tolerances specified.

3.4 DRIVING

3.4.1 General

Drive piling in true line and position. Perform initial pile driving using a vibratory hammer. Complete pile driving using an impact hammer at any pile that does not achieve design tip elevation using a vibratory hammer. Operate hammer at the manufacturer's rated energy, and drive piling without interruption to the indicated tip elevations except piling that do not reach design tip using a vibratory hammer shall be driven further using an impact hammer in which case interruptions in driving are acceptable. ~~At a minimum, one out of every three of the trestle piles, and one out of every four of the pier piles shall be proofed using an impact hammer. The 36-inch diameter guide piles need not be impact driven. Impact hammer efficiency and stresses in the piles shall be demonstrated and stresses in the pile shall be measured by proofing the indicator piles. The 36-inch diameter guide piles need not be impact driven. Use a pile driving analyzer (PDA) supplied and operated by the Contractor. Perform a CAPWAP (Case Pile Wave Analysis Program) analysis on each pile analyzed with PDA. Replace or repair hammers not performing to the minimum required efficiency within two working days, and reproof athe piles. Submit the CAPWAP analysis results to the Contracting Officer within 48 hours of completion.~~

3.4.2 Indicator Piles and Driving Criteria

a. Indicator piles shall consist of one 18 inch diameter pile (at grid lines H′ and 1′), one 24 inch diameter pile (at grid lines E′ and 6′), and two 30 inch piles (at grid lines E′ and 10′ and grid lines P′ and 12′) With the use of a pile driving analyzer (PDA) meeting the requirements of ASTM D4595, the Contractor shall dynamically test, and perform a Case Pile Wave Analysis Program analysis (CAPWAP analysis) for each indicator pile. A CAPWAP analysis shall be provided both for initial drive of the pile, to two feet short of indicated tip elevation, and for a re-drive of the pile occurring a minimum of 72 hours after initial drive. The Contractor shall submit to the Contracting Officer a report that shall include, at a minimum, the blow rate per minute, input and reflected values of force and velocity, the magnitude of stresses in the pile, hammer energy transferred to the pile, and bearing and uplift capacities of the pile from the CAPWAP analysis. The report shall be prepared and sealed by a Professional Engineer registered in U.S. and shall be submitted within three working days of the completion of the testing.

The Contracting Officer shall provide a minimum bearing capacity driving criterion to the Contractor in the form of an inspector’s chart that relates blow count and ram stroke height to the required bearing capacity. The driving criteria, consisting of a minimum tip elevation, and minimum blow count based on a bearing capacity inspector’s chart, shall be used to evaluate the driving acceptance of the piles in the trestle, pier, and dolphins. One out of every three piles in the trestle (9 total), one out of every four piles in the pier (10 total), and one out of every five piles in the dolphins (2 total) shall be required to meet both the tip elevation and blow count criteria. These piles, that require proofing by impact hammer, shall be selected by the Contracting

Officer. The remainder of the piling need be driven to meet the minimum tip elevation criterion only. These piling need not be driven with an impact hammer. Hammers not performing to the minimum required efficiency shall be repaired or replaced within two working days, and the piles shall be re-proofed again. Required ultimate bearing capacity for the trestle, pier, and dolphin piles is indicated in Table 1.

TABLE 1

PILE GRID	ULTIMATE BEARING (KIPS)
1'	320
2' - 5'	375
6' - 8'	450
9'	405
10' - 11'	500
12' - 14'	520
13.2'	770
13.5'	770

~~3.4.2 Minimum Tip Elevations and Restrikes~~

a. ~~Drive piling to minimum tip elevations indicated on the drawings. The Government will develop driving criteria based on the Contractor's proposed equipment and methods to be used for pile driving. To confirm pile capacity, a minimum of three (3) each of the 18-inch, 24-inch, and 30-inch diameter piling shall be restruck as requested by the Government after a minimum of 48 hours of set time and at locations determined by the Government. Additional piles may be impact-hammered at the request of the Contracting Officer. For piles that need not be proofed, use impact driving if the vibratory hammer is not capable of advancing the pile to the final tip elevation. Impact driving is also required to proof the number of piles indicated in Paragraph above titled "General". Minimum penetration by impact driving for proofing is 1 foot. Minimum penetration by impact driving for restrikes is 6 inches. Locations of the piles to be impact driven will be determined by the Government based on driving logs provided by the Contractor~~.

b. Conduct restrikes in such a manner that full and consistent energy from the hammer is imparted to the pile. For each restruck pile, mark the pile in one inch increments. Use level survey techniques from stable ground or an otherwise fixed position for recording restrikes such that the number of blows of the hammer can be recorded accurately for each inch of penetration of the pile. Continue restrikes for the minimum penetration required.

c. If, in driving, it is found that the pile is not of sufficient length to provide the capacities specified, notify the Contracting Officer immediately. If a driven pile fails to reach the indicated tip elevation, or if a pile reaches the indicated tip elevation without reaching the required driving resistance, notify the Contracting Officer immediately and perform corrective measures as required.

d. In the event that any pile does not achieve the required final set

female NPT threads and 2" Victaulic groove. Outlet shall be 1-1/2" female NPT threads. Assembly shall include declutching arbor to prevent damage from reverse winding.

2.11.3 Emergency Shut off Button

Fuel box to be equipped with a round, red emergency fuel shut-off push button. The push button assembly shall be surface mounted NEMA 4X and 12 non-metallic back box. A key shall be required for reset.

2.12 INSULATION

2.12.1 Aboveground Pipe Insulation

Aboveground diesel fuel piping shall be insulated using flexible elastomeric foam insulation. Closed-cell, foam- or expanded-rubber materials containing anti-microbial additive, complying with ASTM C534/C534M, Grade 1, Type I for tubular materials. Type I shall have vapor retarder/vapor barrier skin on one or both sides of the insulation, and require an additional exterior vapor retarder covering for high relative humidity and below ambient temperature applications. Insulation thickness shall be 1-inch.

PART 3 EXECUTION

3.1 INSTALLATION

Installation, workmanship, fabrication, assembly, erection, examination, inspection, and testing shall be in accordance with ASME B31.3 and NFPA 30, except as modified herein. Safety rules as specified in NFPA 30 shall be strictly observed. Never direct bury threaded connections, socket welded connections, unions, flanges, valves, air vents, or drains. Install all work so that parts requiring periodic inspection, operation, maintenance, and repair are readily accessible.

3.1.1 Pumps

Properly level, align, and secure pumps in place in accordance with manufacturer's instructions. Support, anchor, and guide so that no strains are imposed on a pump by weight or thermal movement of piping.

3.1.2 Piping

3.1.2.1 General

Thoroughly clean pipe of all scale and foreign matter before the piping is assembled. Cut pipe accurately to measurements established at the jobsite, and worked into place without springing or forcing. Cut pipe square and have burrs removed by reaming. Install pipe to permit free expansion and contraction without causing damage to the building structure, pipe, joints, or hangers. Cutting or other weakening of the building structure to facilitate piping installation will not be permitted without written approval.

a. Use reducing fittings for changes in pipe sizes. Install equipment and piping into space allotted and allow adequate acceptable clearances for installation, replacement, entry, servicing, and maintenance. Provide electric isolation fittings between dissimilar metals. Install piping straight and true to bear evenly on supports. Piping shall be free of traps, shall not be embedded in concrete pavement, and shall drain as indicated. Make changes in direction with fittings, except that bending of pipe 4 inches and smaller will be permitted, provided a pipe bender is used and wide sweep bends are formed. Mitering or notching pipe or other similar construction to form elbows or tees will not be permitted.

b. The centerline radius of bends shall not be less than 6 diameters of the pipe. Bent pipe showing kinks, wrinkles, flattening, or other malformations will not be accepted. When work is not in progress, securely close open ends of pipe and fittings with an expandable pipe plug so that water, earth, or other substances cannot enter the pipe or fittings. For belowground piping, the full length of each pipe shall

2.2.3 Aggregates

2.2.3.1 Aggregates Selection

See 03 31 29 MARINE CONCRETE. Use coarse aggregate gradation No. 8.

2.2.4 Grout

See 03 31 29 MARINE CONCRETE.

2.2.5 Admixtures

2.2.5.1 Air-Entraining

See 03 31 29 MARINE CONCRETE.

2.2.5.2 Accelerating

ASTM C494/C494M, Type C or E.

2.2.5.3 Water Reducing

ASTM C494/C494M, Type A, E, or F.

2.2.6 Reinforcement

2.2.6.1 Reinforcing Bars

ASTM A615/A615M; ASTM A706/A706M, Grade 60 deformed. All reinforcing bars shall be galvanized per ASTM A767/A767M. Galvanized reinforcing need not be chromate treated after galvanization.

2.2.6.2 Welded Wire Reinforcement

ASTM A1064/A1064M. Provide flat sheets of welded wire fabric, rolled fabric.Maximum fabric grid is 2 inch by 2 inch. Welded wire fabric shall be galvanized per ASTM A641/A641M, Class C.

2.2.7 Metal Accessories

Provide items that are hot-dip galvanized in accordance with ASTM A123/A123M or ASTM A153/A153M, as applicable. Do hot-dip galvanize the high strength bars.

Stainless steel accessories shall be Type 316.

2.2.7.1 Inserts

ASTM A47/A47M, Grade 32510 or 35018, or ASTM A27/A27M Grade U-60-30.

2.2.7.2 Structural Steel

W-shapes	ASTM A992/A992M
Channels and Angles	ASTM A36/A36M
HSS	ASTM A500/A500M Grade B
Pipe	ASTM A53/A53M Grade B
Plate and bar	ASTM A572/A572M, Grade 50

2.3.1 Precast Floats Fabrication

a. Cast precast floats as individual segments as indicated in the drawings, or as a single monolithic float. If cast in segments, use match casting against one another to create a tight interface when joined by high strength bars. If cast monolithically then shear keys need not be formed at joints between segments. A cold joint between the keel slab and the walls of the floats may be used, provided a 5/8 inch deep reveal is cast at the joint and this reveal is fully filled with an epoxy mortar or mastic suitable for long term exposure in a marine environment. Provide performance criteria including service life examples for the epoxy mortar or mastic.

b. Float segments may be joined on a submersible barge, in a dry dock or while floating in the water. If joined in the water, grouting of P/T end pocket shall be done in the dry by cofferdam or other means at submerged locations. High strength P/T bar sleeves shall be flushed of seawater immediately prior to placement of bars. Bar sleeves may be exposed to seawater for no more than 72 hours prior to placement of concrete or grout. High strength P/T bars shall be coated with grease prior to placement in the sleeves.

c. Contractor shall be responsible for the segment lifting plan and details. Lifting of individual float segments shall be done by sling or stainless steel cast-in lifting devices. Lifting shall be done in a manner that prevents cracking of the concrete under dead load plus an assumed 20 percent impact load. The floats shall not be lifted after segments have been joined.

d. Floats may be transported to the project site by tow or by barge. If towed, the Contractor shall be responsible for the towing plan. The Contractor shall also determine the suitability of the floats to endure, without damage, the sea conditions experienced during transport to the site. See the paragraph "Surface Finish" below for definitions of damage and cracking that requires repair, or is grounds for rejection of the float.

2.3.2 Forms

Brace forms to prevent deformation. Forms shall produce a smooth, dense surface. Chamfer exposed edges of floats 1/2 inch, unless otherwise indicated. Form tolerance shall not exceed 1/4~~1/8~~ inch from dimensions indicated on shop drawings. When measured diagonally, floats more than 1/2 inch out of square shall be rejected.

2.3.3 Reinforcement Placement

ACI 318 for placement and splicing. Reinforcement may be preassembled before placement in forms.

2.3.4 Concrete

2.3.4.1 Concrete Mixing

ASTM C94/C94M. Mixing operations shall produce batch-to-batch uniformity of strength, consistency, and appearance.

2.3.4.2 Concrete Placing

ACI 304R, ACI 305R for hot weather concreting, ACI 306.1for cold weather concreting, and ACI 309R, unless otherwise specified. Vibrate concrete internally and/or externally to assure a smooth, dense finish.

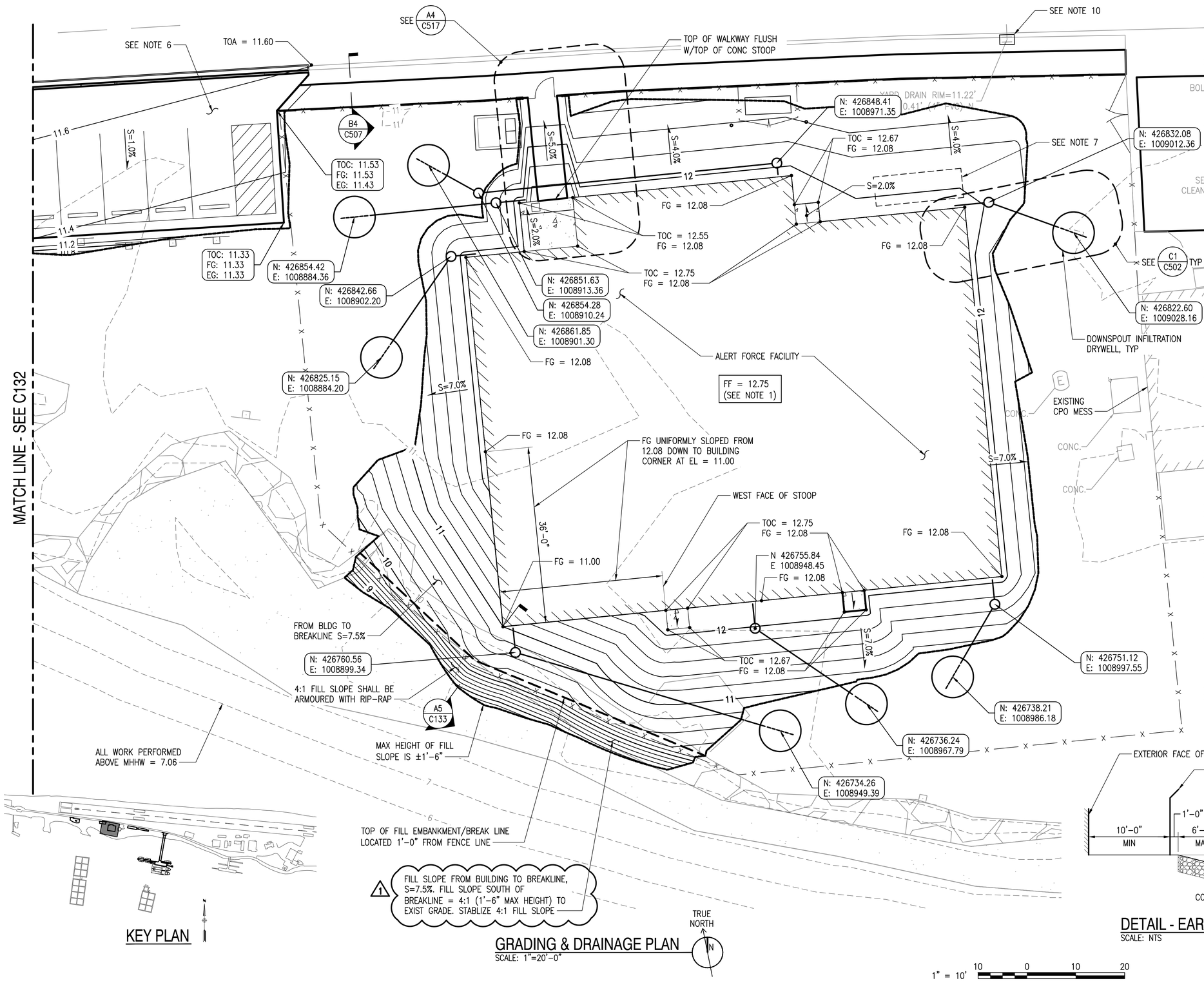

KEY PLAN

GRADING & DRAINAGE PLAN

SCALE: 1"=20'-0"

NOTES:

1. FINISH FLOOR MLLW EL OF AFF = 12.75, WHICH EQUALS FF EL = 100.0' OF REFERENCE VERTICAL DATUM ON ARCH AND STRUCTURAL DRAWINGS.
2. SURROUNDING FINISH GRADE AT BUILDING PERIMETER IS FG = 12.08, WHICH IS 8" LOWER THAN FF EL. (PER UFC 1-200-01).
3. STOOPS SLOPE AWAY FROM BUILDING DOOR AS INDICATED ON THE PLAN, S=2.0%.
4. FINISH GRADE AROUND BUILDING, FG = 12.08. SLOPE DOWN & AWAY FROM BUILDING AT S=7.0% DOWN TO EXISTING GRADE. ALSO SEE NOTE 7. SLOPE ON NORTH SIDE OF BUILDING SHALL BE AS NOTED ON PLAN.
5. CONTOURS ARE AT INTERVALS SHOWN IN LEGEND.
6. SLOPE PERVIOUS CONCRETE FOR PARKING LOT DOWN AT S=1.0% FROM EXISTING ROADWAY TO SOUTH EDGE. FILL SLOPE IS PRODUCED BY SLOPING FINISH GRADE AWAY AND DOWN FROM PERIMETER OF PERVIOUS CONCRETE AT S=2.0% FOR 1'-0" (HORIZ) AND THEN SLOPING DOWN AT 4:1 (HORIZ: VERT) TO EXISTING GRADE.
7. IN AREA RESERVED FOR PORTABLE GENERATOR, GRADE AWAY FROM BUILDING AT S=2.0% FOR A DISTANCE OF 10'-0", THEN SLOPE DOWN TO EXISTING USING S=7.0%.
8. COORDINATES ON PLAN FOR DOWN SPOUT DRYWELLS REPRESENT CENTER OF DRYWELL.
9. EXCAVATION ON NORTH SIDE OF AFF SHALL BE DONE WITH CAUTION USING HAND TOOLS TO AVOID DAMAGING EXISTING BURIED CONDUIT. FOR LOCATION SEE V103 AND C147.
10. REMOVE EXISTING YARD DRAIN AND REPLACE WITH WSDOT TYPE 1 CATCH BASIN. MATCH EXISTING RIM ELEVATION OR SLIGHTLY LOWER RIM TO CREATE LOW POINT FOR DRAINAGE. IF EXISTING PIPING IS FILLED WITH DEBRIS, CONTACT CONTRACTING OFFICER.

LEGEND

FOR GRADING AND DRAINAGE LEGEND, REFER TO C131.

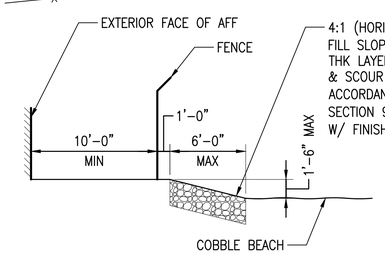

DETAIL - EARTHWORK SCHEMATIC

SCALE: NTS

A5 C133

1	AMENDMENT 0003	10/29/15	VHN
SYM	DESCRIPTION	DATE	APPR

NAVFAC

BergerABAM
33301 9th Avenue South, Suite 300
Federal Way, Washington 98003-2600
(206) 431-2300 Fax: (206) 431-2250
A/E INFO

APPROVED
FOR COMMANDER NAVFAC
ACTIVITY
SATISFACTORY TO DATE
DES VHN DRW MDB CHK CL
PM/DM
BRANCH MANAGER
CHIEF ENG/ARCH
FIRE PROTECTION

DEPARTMENT OF THE NAVY
NAVFAC NW
UNITED STATES COAST GUARD AIR STATION/SECTOR FIELD OFFICE
NAVAL FACILITIES ENGINEERING COMMAND
NAVFAC NORTHWEST
SILVERDALE, WASHINGTON
PORT ANGELES, WASHINGTON

FY 2015 MCON P-993, TPS PORT ANGELES FORWARD OPERATING LOCATION

GRADING & DRAINAGE PLAN - SHEET 3

SCALE: AS SHOWN
EPROJECT NO.: 1291634
CONSTR. CONTR. NO.
NAVFAC DRAWING NO. 16033007
SHEET 44 OF 330
C133

DRAWFORM REVISION: 10 MAY 2014

FILE NAME: Q:\Vdecentley\2014\A14.0078.10\CADD\Dwgs\Site\P993-1291634-C133.dwg PLOTTED: 7/28/15 - 10:51am BY: bollinger

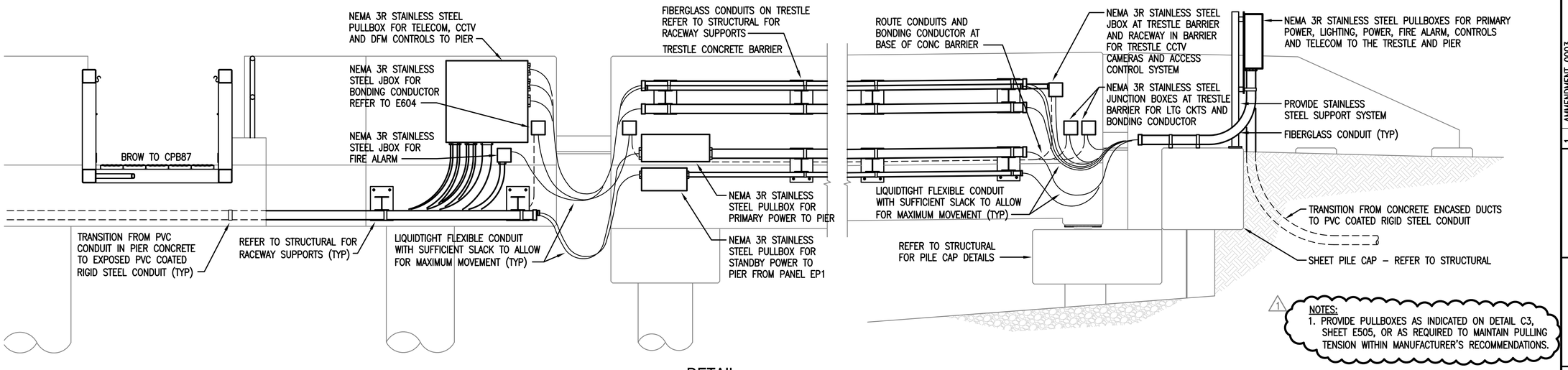

1 NOTES:
1. PROVIDE PULLBOXES AS INDICATED ON DETAIL C3, SHEET E505, OR AS REQUIRED TO MAINTAIN PULLING TENSION WITHIN MANUFACTURER'S RECOMMENDATIONS.

C3 DETAIL

UG POWER AND TELECOM TRANSITION TO TRESTLE
SCALE: NONE

E103, E105

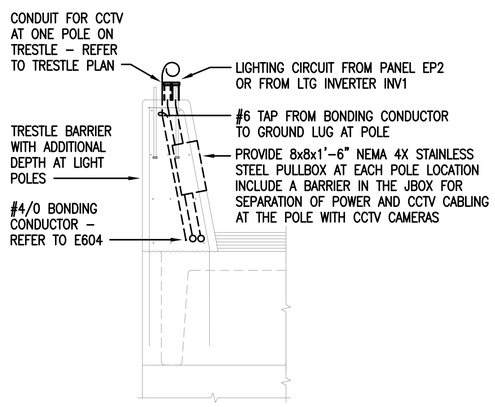

A2 DETAIL

CONDUITS AND BONDING CONDUCTOR AT TRESTLE BARRIER
SCALE: NONE

E103, E104

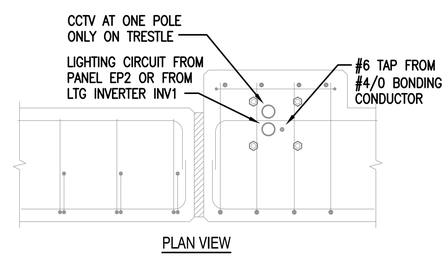

NOTE:
COORDINATE RACEWAY ROUTING WITH REINFORCING STEEL. INSTALL POLES IN ACCORDANCE WITH MANUFACTURER'S WRITTEN INSTRUCTIONS.

A3 DETAIL

CONDUIT AND BONDING CONDUCTOR AT TRESTLE LIGHT POLES
SCALE: NONE

E103, E104

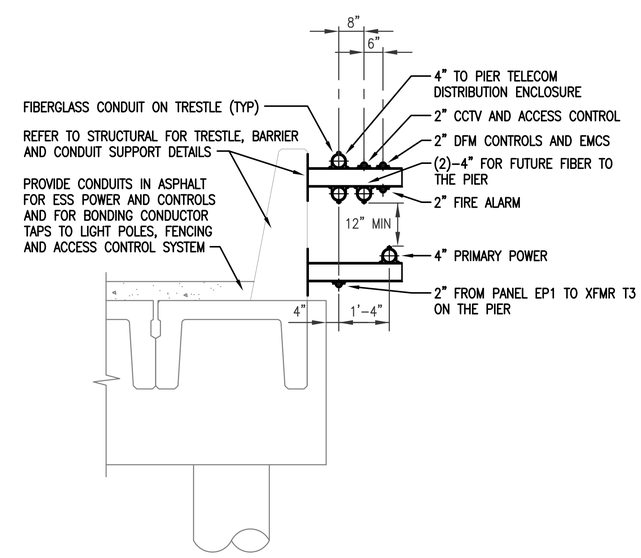

A4 DETAIL

CONDUIT SUPPORT RACK AT TRESTLE BARRIER
SCALE: NONE

E103, E105

1	AMMENDMENT 0003	10/29/15	KTL
SYM	DESCRIPTION	DATE	APPR

NAVFAC

SEAL

BergerABAM
33301 9th Avenue South, Suite 300
Federal Way, Washington 98003-2600
(206) 431-2300 Fax: (206) 431-2250
A/E INFO

APPROVED
FOR COMMANDER NAVFAC
ACTIVITY
SATISFACTORY TO DATE
DES WW DRW WW CHK KTL
PM/DM DM/SC
BRANCH MANAGER
CHIEF ENG/ARCH
FIRE PROTECTION

DEPARTMENT OF THE NAVY
NAVFAC NW
NAVFAC NORTHWEST
NAVAL FACILITIES ENGINEERING COMMAND
SILVERDALE, WASHINGTON
UNITED STATES COAST GUARD AIR STATION/SECTOR FIELD OFFICE
PORT ANGELES, WASHINGTON

FY 2015 MCON P-993, TPS PORT ANGELES
FORWARD OPERATING LOCATION

TYPICAL DETAILS - SHEET 5

SCALE: AS NOTED
EPROJECT NO.: 1291634
CONSTR. CONTR. NO.
NAVFAC DRAWING NO.
16033245
SHEET 282 OF 330
E505

DRAWFORM REVISION: 10 MAY 2014

LANE COBURN & ASSOCIATES
12900 NE 180TH STREET, SUITE 201
BOTHELL, WA 98011
MAIN OFFICE: 425-368-4848
www.lanecoburn.com

FILE NAME: X:\LCA Projects\14132 - P993 TPS Pier - USCG Port Angeles\Dwgs\Elec\P993-1291634-E505.dwg PLOTTED: 10/28/15 - 2:49pm BY: Vicky

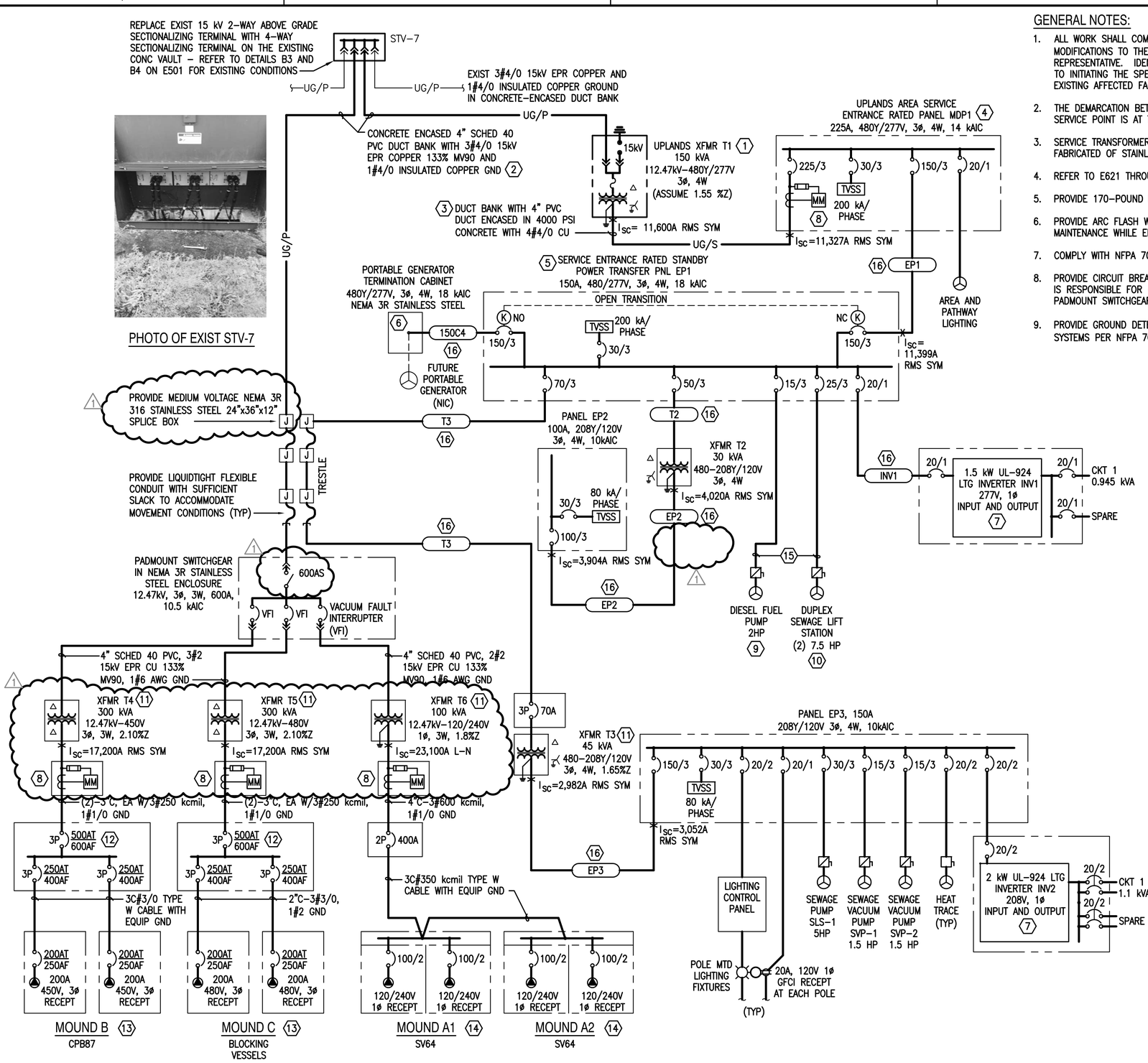

A2 PIER ONE-LINE DIAGRAM
SCALE: NONE

GENERAL NOTES:

1. ALL WORK SHALL COMPLY WITH THE ELECTRICAL SAFETY REQUIREMENTS CONTAINED IN EM 385-1-1. COORDINATE ALL MODIFICATIONS TO THE EXISTING PRIMARY SYSTEM WITH USCGS PORT ANGELES THROUGH THE CONTRACTING OFFICER'S REPRESENTATIVE. IDENTIFY REQUIREMENTS AND SUBMIT OUTAGE REQUESTS FOR APPROVAL BY THE GOVERNMENT PRIOR TO INITIATING THE SPECIFIC WORK TASK. KEEP POWER OUTAGES TO A MINIMUM. PROVIDE TEMPORARY POWER TO EXISTING AFFECTED FACILITIES AS REQUIRED TO MAINTAIN SERVICE.
2. THE DEMARCATION BETWEEN THE NEC AND THE NESC SHALL BE AT THE SERVICE TRANSFORMER SECONDARY. THE SERVICE POINT IS AT THE LINE SIDE OF THE MAIN OVERCURRENT PROTECTIVE DEVICE.
3. SERVICE TRANSFORMERS AND EQUIPMENT ENCLOSURES INSTALLED OUTDOORS SHALL BE CORROSION RESISTANT AND FABRICATED OF STAINLESS STEEL WITH STAINLESS STEEL HARDWARE.
4. REFER TO E621 THROUGH E623 FOR PANEL SCHEDULES.
5. PROVIDE 170-POUND MINIMUM STRENGTH POLY FIBER METERED PULL TAPE OR EQUIVALENT IN ALL EMPTY RACEWAYS.
6. PROVIDE ARC FLASH WARNING LABELS ON ELECTRICAL EQUIPMENT LIKELY TO REQUIRE EXAMINATION, SERVICING OR MAINTENANCE WHILE ENERGIZED. REFER TO TYPICAL DETAIL B5 ON E606.
7. COMPLY WITH NFPA 70 ARTICLE 240.87 AS APPLICABLE FOR PRIMARY SWITCHGEAR.
8. PROVIDE CIRCUIT BREAKERS TO SELECTIVELY COORDINATE TO 0.1 SECOND FOR EMERGENCY LIGHTING. THE CONTRACTOR IS RESPONSIBLE FOR PROVIDING THE SELECTIVE COORDINATION AND ARC FLASH STUDY AND FOR RELAY SETTINGS AT THE PADMOUNT SWITCHGEAR.
9. PROVIDE GROUND DETECTORS (VISUAL INDICATION, AUDIBLE SIGNAL OR BOTH) AND MARKING FOR ALL UNGROUNDED SYSTEMS PER NFPA 70-250.21 (B,C).

KEY NOTES:

(1) PROVIDE TRANSFORMER AND PADMOUNT. REFER TO TYPICAL DETAIL A2 ON E501 AND TO GROUNDING DIAGRAM ON E604.

(2) REFER TO TYPICAL PRIMARY TRENCH DETAIL C2 ON E501.

(3) REFER TO TYPICAL XFMR SECONDARY TRENCH DETAIL B2 ON E501.

(4) PROVIDE SERVICE ENTRANCE RATED PANELBOARD. REFER TO E604 FOR GROUNDING AND BONDING REQUIREMENTS.

(5) PROVIDE SERVICE ENTRANCE RATED DISTRIBUTION PANEL WITH KEY INTERLOCK BREAKERS FOR MANUAL TRANSFER BETWEEN NORMAL AND STANDBY POWER. INSTRUCTIONS PROVIDING SEQUENCE OF OPERATION FOR GENERATOR CONNECTION AND TRANSFER OF LOAD SHALL BE POSTED AT THE GENERATOR CONNECTION CABINET AND AT THE PANEL.

(6) PROVIDE PORTABLE GENERATOR TERMINAL CABINET WITH COLOR-CODED CAM LOCK CONNECTIONS FOR TERMINATION OF CABLES FROM THE GENERATOR.

(7) PROVIDE UL-924 LIGHTING INVERTER WITH INTEGRAL OUTPUT BREAKERS FOR EGRESS LIGHTING CIRCUITS.

(8) COORDINATE METER REQUIREMENTS WITH USCGS PORT ANGELES THROUGH THE CONTRACTING OFFICER. CONTRACTOR'S SYSTEM INTEGRATOR SHALL BE RESPONSIBLE FOR CONFIRMATION OF EXISTING CONDITIONS AND FOR INTEGRATION OF METERING WITH THE BASE ENERGY MANAGEMENT AND CONTROL SYSTEM.

(9) REFER TO MECHANICAL FOR DIESEL FUEL PUMP AND FUEL DISPENSING SYSTEM INFORMATION AND TO DETAIL B4 ON E614 FOR CONTROL WIRING. CONTRACTOR'S SYSTEM INTEGRATOR SHALL BE RESPONSIBLE FOR STATUS AND ALARM WIRING AND INTEGRATION WITH THE BASE ENERGY MANAGEMENT AND CONTROL SYSTEM.

(10) REFER TO CONTROL DIAGRAM A4 ON E613.

(11) REFER TO DETAIL C4 ON E401 FOR PIER SERVICE EQUIPMENT.

(12) PROVIDE ADJUSTABLE ELECTRONIC TRIP MOLDED CASE CIRCUIT BREAKER, ELECTRONIC LINE INSULATION RESISTANCE MONITOR WITH AMBER WARNING ALERT LIGHT AND RED ALARM LIGHT AND HORN, HIGH-SPEED, HIGH POWER SHIPS-SERVICE UNGROUNDED DELTA SURGE PROTECTIVE DEVICE AND CIRCUIT BREAKER SHUNT-TRIP ON PHASE-LOSS AFTER ADJUSTABLE TIME DELAY, INCLUDING SHUNT-TRIP AUXILIARY CONTACTS.

(13) POWER MOUND SHALL BE FABRICATED TO INCORPORATE 200A RECEPTACLES SPECIFICALLY CONSTRUCTED FOR MARINA APPLICATIONS. POWER OUTLETS SHALL BE SINGLE, LOCKING AND GROUNDING TYPE, SIZE AND VOLTAGE AS INDICATED. CIRCUIT BREAKERS SHALL BE SIZED TO MATCH THE OUTLET TO WHICH IT IS CONNECTED. EACH INDIVIDUAL OUTLET AND CIRCUIT BREAKER ENCLOSURE SHALL BE EQUIPPED WITH A SEPARATE WEATHERPROOF COVER AND GASKET. REFER TO E602 FOR ADDITIONAL DETAILS.

(14) POWER MOUND SHALL BE FABRICATED TO INCORPORATE 100A RECEPTACLES FOR SV64'S AND SPECIFICALLY CONSTRUCTED FOR MARINA APPLICATIONS, WITH NEMA 4X 316 STAINLESS STEEL ENCLOSURE. POWER OUTLETS SHALL BE SINGLE, LOCKING AND GROUNDING TYPE, SIZE AND VOLTAGE AS INDICATED. CIRCUIT BREAKERS SHALL BE SIZED TO MATCH THE OUTLET TO WHICH IT IS CONNECTED. EACH INDIVIDUAL OUTLET AND CIRCUIT BREAKER ENCLOSURE SHALL BE EQUIPPED WITH A SEPARATE WEATHERPROOF COVER AND GASKET. REFER TO E602 FOR ADDITIONAL DETAILS.

(15) REFER TO MECHANICAL EQUIPMENT CIRCUITING SCHEDULE ON E642.

(16) REFER TO E606 FOR DISTRIBUTION FEEDER SCHEDULE AND E643 FOR BRANCH CIRCUIT SCHEDULE.

SYM	DESCRIPTION	DATE	APPR
1	AMMENDMENT 0003	10/29/15	KTL

NAVFAC

BergerABAM
33301 9th Avenue South, Suite 300
Federal Way, Washington 98003-2600
(206) 431-2300 Fax: (206) 431-2250

A/E INFO

APPROVED

FOR COMMANDER NAVFAC

ACTIVITY

SATISFACTORY TO DATE

DES WW DRW WW CHK KTL

PM/DM DM/SC

BRANCH MANAGER

CHIEF ENG/ARCH

FIRE PROTECTION

DEPARTMENT OF THE NAVY
NAVFAC NW
UNITED STATES COAST GUARD AIR STATION/SECTOR FIELD OFFICE
NAVAL FACILITIES ENGINEERING COMMAND
NAVFAC NORTHWEST
SILVERDALE, WASHINGTON
PORT ANGELES, WASHINGTON

FY 2015 MCON P-993, TPS PORT ANGELES
FORWARD OPERATING LOCATION

PIER ONE-LINE DIAGRAM - SHEET 1

LANE COBURN & ASSOCIATES
12900 NE 180TH STREET, SUITE 201
BOTHELL, WA 98011
MAIN OFFICE: 425-368-4848
www.lanecoburn.com

SCALE: AS NOTED
EPROJECT NO.: 1291634
CONSTR. CONTR. NO.
NAVFAC DRAWING NO. 16033251
SHEET 288 OF 330
E601

DRAWFORM REVISION: 10 MAY 2014

FILE NAME: V:\LCA Projects\14132 - P993 TPS Pier - USCG Port Angeles\Dwgs\Dwg\P993-1291634-E601.dwg PLOTTED: 10/28/15 - 3:00pm BY: Vicky

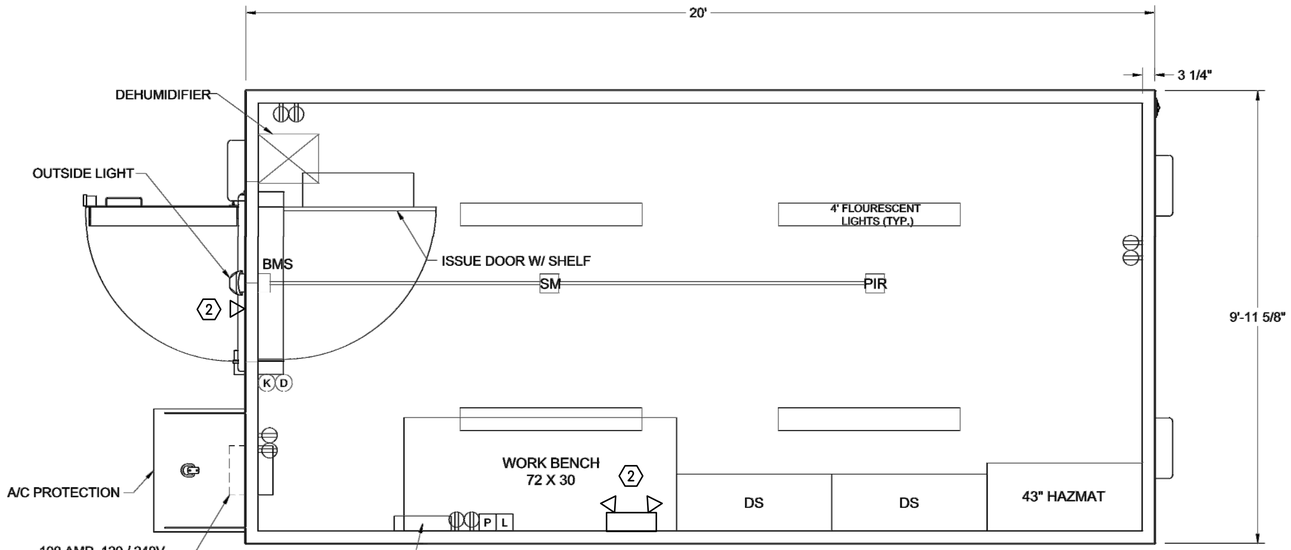

C2 ARMORY ENLARGED PLAN

SCALE: NONE E101

GENERAL NOTES:

1. THE ARMORY IS FURNISHED BY THE GOVERNMENT. INFORMATION SHOWN IS TAKEN FROM DRAWINGS PROVIDED BY THE MANUFACTURER. THE CONTRACTOR IS RESPONSIBLE FOR INSTALLING THE ARMORY, INCLUDING GROUNDING AND LIGHTNING PROTECTION SYSTEMS, SINGLE-POINT CONNECTIONS FOR POWER, SECURITY AND TELEPHONE, FOR INSTALLATION OF A UPS AND MODIFICATIONS TO BRANCH CIRCUIT WIRING SERVING LIGHTS AND THE SECURITY SYSTEM.
2. REFER TO E652 FOR MANUFACTURER'S DRAWING SHOWING ARMORY GROUNDING, LIGHTING, EQUIPMENT AND PANEL SCHEDULES.
3. REFER TO E653 FOR ARMORY LIGHTNING PROTECTION PLAN.

KEY NOTES:

1. COORDINATE WITH CIVIL FOR PLACEMENT OF THE ARMORY ON THE CONCRETE PAD, FOR RACEWAY PENETRATIONS THROUGH THE SLAB FOR POWER, SECURITY AND TELEPHONE CONNECTIONS, AND FOR GROUNDING AND LIGHTNING PROTECTION SYSTEM CONNECTIONS.
2. A UPS WAS PROVIDED BY THE ARMORY MANUFACTURER WITH MINIMUM 8-HOUR UPS BACKUP FOR THE INTRUSION DETECTION SYSTEM ONLY. ARMORY INTERIOR AND EXTERIOR LIGHTS, HOWEVER, ARE ALSO REQUIRED TO HAVE 8-HOUR BACKUP. BY DIRECTION FROM NAVFAC NW, THE CONTRACTOR SHALL PROVIDE INTERIOR AND EXTERIOR EMERGENCY LIGHTING WALL PACK UNITS WITH MINIMUM 8-HOUR BATTERY BACKUP WITH WEATHERPROOF REMOTE HEADS AT THE EXTERIOR ENTRY. REFER TO LUMINAIRE SCHEDULE, FIXTURE TYPE EX3 FOR REQUIREMENTS. WALL PACKS MUST BE SUITABLE FOR USE IN AN ARMORY. HARD WIRE UNITS FROM THE EXISTING BRANCH CIRCUIT PANEL FOR A COMPLETE AND OPERATIONAL SYSTEM. COORDINATE LOCATION OF THE WALL PACK FIXTURES WITH THE CONTRACTING OFFICER'S REPRESENTATIVE.

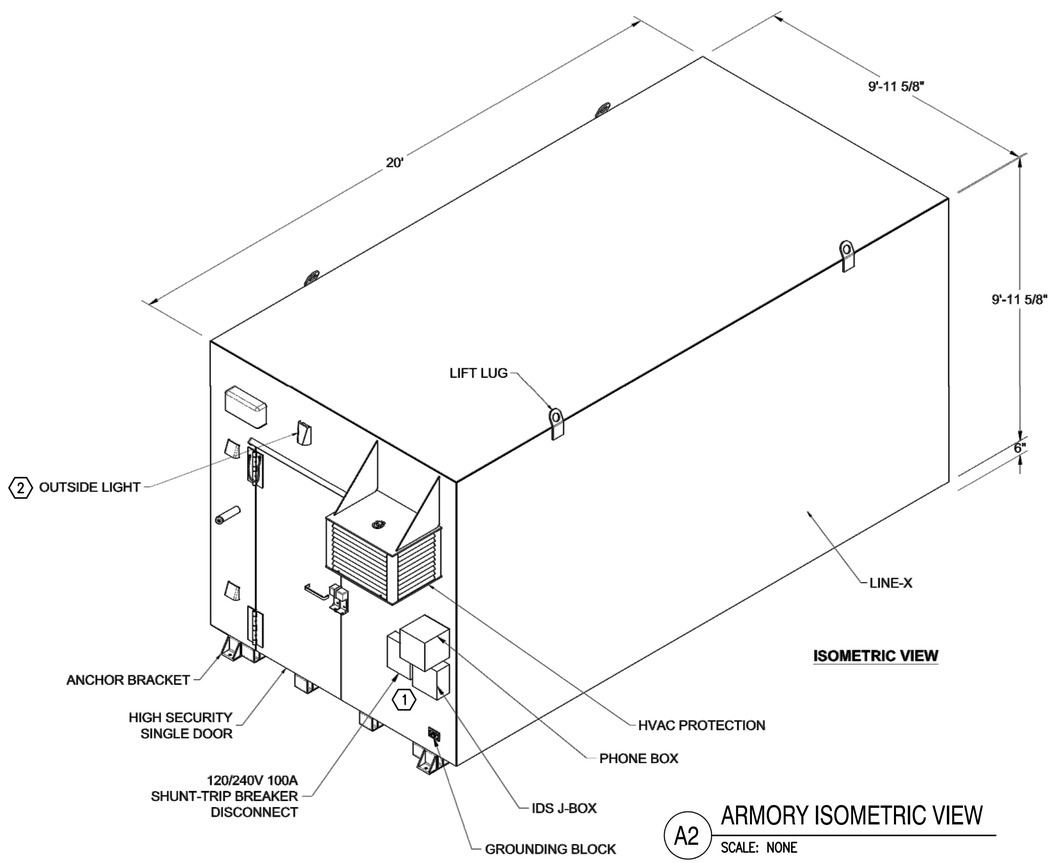

A2 ARMORY ISOMETRIC VIEW

SCALE: NONE

LEGEND:

K	KILL SWITCH
D	DURESS
	ELECTRIC RECEPTACLE
DS	DOUBLE STACKED
SS	SINGLE STACKED
EMR	EMERGENCY LIGHT
P	TELEPHONE JACK
L	LAN CONNECTION
SE	SEISMIC SENSOR
SM	SMOKE DETECTION
PIR	PIR
BT	BULLET TRAP
T	THERMOSTAT
	GROUND

SYM	DESCRIPTION	DATE	APPR
1	AMMENDMENT 0003	10/29/15	KTL

NAVFAC

SEAL

BergerABAM
33301 9th Avenue South, Suite 300
Federal Way, Washington 98003-2600
(206) 431-2300 Fax: (206) 431-2250
A/E INFO

APPROVED
FOR COMMANDER NAVFAC
ACTIVITY
SATISFACTORY TO DATE
DES WW DRW WW CHK KTL
PM/DM DM/SC
BRANCH MANAGER
CHIEF ENG/ARCH
FIRE PROTECTION

DEPARTMENT OF THE NAVY
NAVFAC NW
NAVAL FACILITIES ENGINEERING COMMAND NORTHWEST
UNITED STATES COAST GUARD AIR STATION/SECTOR FIELD OFFICE
SILVERDALE, WASHINGTON
PORT ANGELES, WASHINGTON

FY 2015 MCON P-993, TPS PORT ANGELES
FORWARD OPERATING LOCATION

ARMORY - SHEET 1

SCALE: AS NOTED
EPROJECT NO.: 1291634
CONSTR. CONTR. NO.
NAVFAC DRAWING NO. 16033269
SHEET 306 OF 330
E651

L.C.a ENGINEERING
LANE COBURN & ASSOCIATES
12900 NE 180TH STREET, SUITE 201
BOTHELL, WA 98011
MAIN OFFICE: 425-368-4848
www.lanecoburn.com

DRAWFORM REVISION: 10 MAY 2014

FILE NAME: V:\LCA Projects\14132 - P993 TPS Pier - USCG Port Angeles\Dwgs\Elec\P993-1291634-E651.dwg PLOTTED: 10/28/15 - 3:00pm BY: Vicky

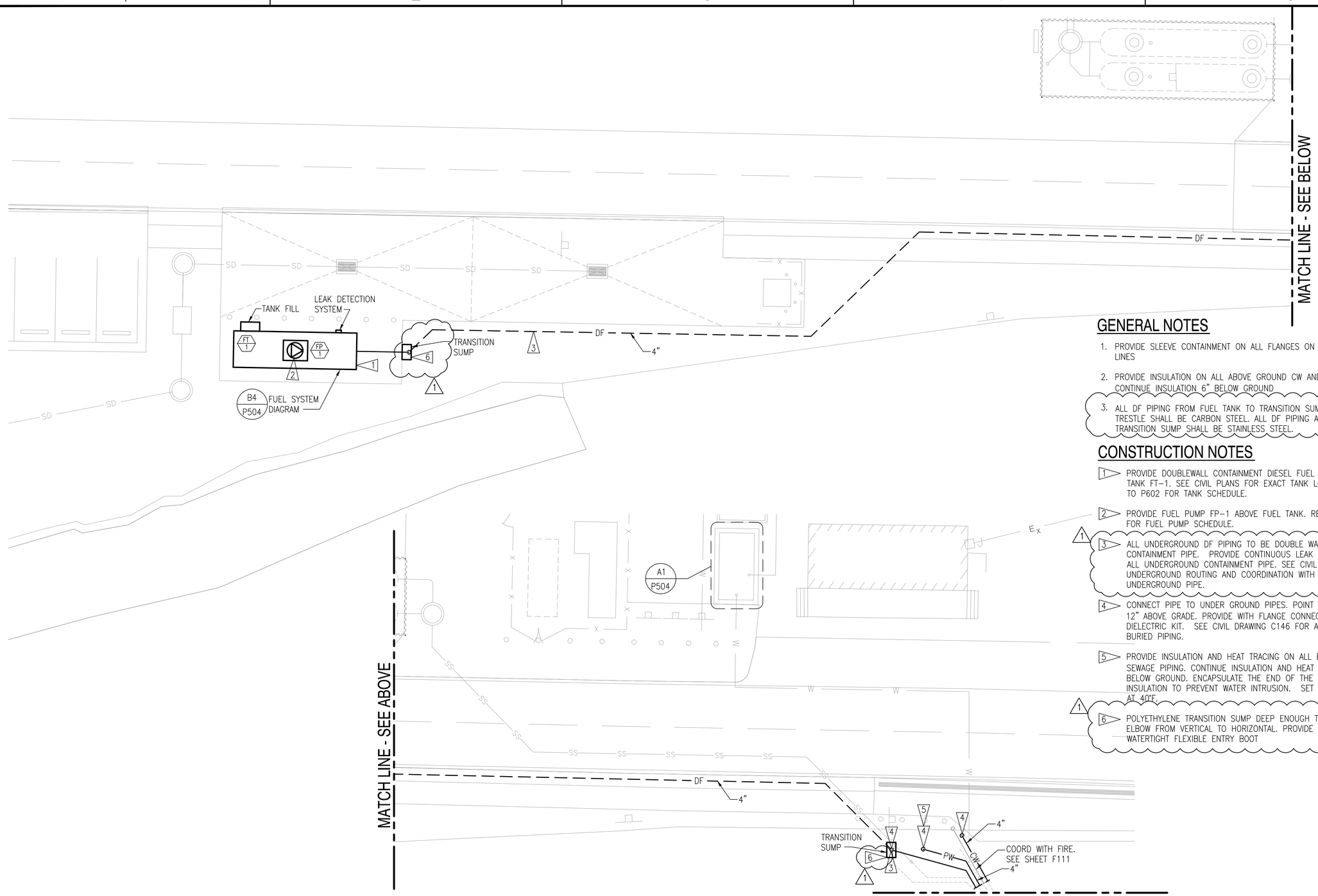

GENERAL NOTES

1. PROVIDE SLEEVE CONTAINMENT ON ALL FLANGES ON DIESEL FUEL LINES
2. PROVIDE INSULATION ON ALL ABOVE GROUND CW AND DF LINES. CONTINUE INSULATION 6" BELOW GROUND
3. ALL DF PIPING FROM FUEL TANK TO TRANSITION SUMP AT TRESTLE SHALL BE CARBON STEEL. ALL DF PIPING AFTER TRANSITION SUMP SHALL BE STAINLESS STEEL. (1)

CONSTRUCTION NOTES

1. PROVIDE DOUBLEWALL CONTAINMENT DIESEL FUEL MARINE STORAGE TANK FT-1. SEE CIVIL PLANS FOR EXACT TANK LOCATION. REFER TO P602 FOR TANK SCHEDULE.
2. PROVIDE FUEL PUMP FP-1 ABOVE FUEL TANK. REFER TO P601 FOR FUEL PUMP SCHEDULE.
3. (1) ALL UNDERGROUND DF PIPING TO BE DOUBLE WALLED CONTAINMENT PIPE. PROVIDE CONTINUOUS LEAK DETECTION ON ALL UNDERGROUND CONTAINMENT PIPE. SEE CIVIL FOR UNDERGROUND ROUTING AND COORDINATION WITH OTHER UNDERGROUND PIPE.
4. CONNECT PIPE TO UNDER GROUND PIPES. POINT OF CONNECTION 12" ABOVE GRADE. PROVIDE WITH FLANGE CONNECTION AND DIELECTRIC KIT. SEE CIVIL DRAWING C146 FOR ALIGNMENT OF BURIED PIPING.
5. PROVIDE INSULATION AND HEAT TRACING ON ALL EXPOSED SEWAGE PIPING. CONTINUE INSULATION AND HEAT TRACING 6" BELOW GROUND. ENCAPSULATE THE END OF THE UNDER GROUND INSULATION TO PREVENT WATER INTRUSION. SET HEAT TRACING AT 40°F.
6. (1) POLYETHYLENE TRANSITION SUMP DEEP ENOUGH TO ENCLOSE ELBOW FROM VERTICAL TO HORIZONTAL. PROVIDE WITH A WATERTIGHT FLEXIBLE ENTRY BOOT

APPROACH STRUCTURES UTILITES PLAN

SCALE: 3/32"=1'-0"

3/32" = 1'-0" 16' 8' 0 16' scale feet

FSi consulting engineers
Seattle, Washington
Solutions & Service

SYM	DESCRIPTION	DATE	APPR
1	AMENDMENT 0003	10/29/15	CMC

NAVFAC

SEAL

BergerABAM
33301 9th Avenue South, Suite 300
Federal Way, Washington 98003-2600
(206) 431-2300 Fax: (206) 431-2250

A/E INFO

APPROVED

FOR COMMANDER NAVFAC

ACTIVITY

SATISFACTORY TO DATE

DES	CBL	DRW	WHB	CHK	MCE

PM/DM

BRANCH MANAGER

CHIEF ENG/ARCH

FIRE PROTECTION

DEPARTMENT OF THE NAVY
NAVFAC NW
NAVAL FACILITIES ENGINEERING COMMAND
NAVFAC NORTHWEST
SILVERDALE, WASHINGTON
UNITED STATES COAST GUARD AIR STATION/SECTOR FIELD OFFICE
PORT ANGELES, WASHINGTON

FY 2015 MCON P-993, TPS PORT ANGELES FORWARD OPERATING LOCATION

UPLANDS UTILITIES PLAN

SCALE: AS SHOWN
EPROJECT NO.: 1291634
CONSTR. CONTR. NO.
NAVFAC DRAWING NO. 16033205
SHEET 242 OF 330

P101

DRAWFORM REVISION: 10 MAY 2014

FILE NAME: L:\14002 P993 USCG Port Angeles\Working Drawings\P993-1291634-P101.dwg PLOTTED: 10/29/15 - 9:46am BY: Chris

PLUMBING FIXTURE SCHEDULE

MARK	FIXTURE DESCRIPTION	BRANCH PIPE SIZE – INCHES DIA. COLD WATER	HOT WATER	WASTE	VENT	FLOW RATES GPM/GPF	NOTES
FD–1	ROUND FLOOR DRAIN	–	–	2"	2"	–	[1]
FS–1	FLOOR SINK	–	–	2"	2"	–	[2]
HB–1	HOSE BIBB	1/2"	–	–	–	–	[3]
KS–1	DOUBLE BASIN KITCHEN SINK	1/2"	1/2"	2"	1 1/2"	1.5 GPM	[8]
DF–1	DRINKING FOUNTAIN	1/2"	–	1 1/2"	1 1/2"	–	[5]
LAV–1	WALL MOUNTED LAVATORY SINK	1/2"	1/2"	2"	1 1/2"	0.5 GPM	[7]
SH–1	SHOWER SPRAY HEAD AND VALVE	1/2"	1/2"	2"	1 1/2"	1.1 GPM	[6]
SH–2	SHOWER SPRAY HEAD AND VALVE, ADA	1/2"	1/2"	2"	1 1/2"	1.1 GPM	[6]
UR–1	HIGH EFFICIENCY WALL MOUNTED URINAL	3/4"	–	4"	2"	0.125 GPF	
WC–1	FLOOR MOUNTED WATER CLOSET TOP SPUD WITH FLUSH VALVE	1"	–	4"	2"	1.28 GPF	
WC–2	FLOOR MOUNTED WATER CLOSET TOP SPUD WITH FLUSH VALVE, ADA	1"	–	4"	2"	1.28 GPF	
DW–1	DISHWASHER	–	1/2"	2"	2"	–	[2]
JS–1	JANITORS SINK	3/4"	3/4"	2"	1 1/2"	2.2 GPM	
LS–1	LAUNDRY SINK	3/4"	3/4"	2"	1 1/2"	2.2 GPM	
WB–1	WALL BOX – ICE MACHINE	1/2"	–	2"	1 1/2"	–	[2]
WB–2	WALL BOX – FLOOR DRAIN/FUNNEL DRAIN	–	–	4"	2"	–	[1][4]
WB–3	WALL BOX – WASHING MACHINE	1/2"	1/2"	2"	1 1/2"	–	

SCHEDULE NOTES:
[1] PROVIDE P–TRAP WITH TRAP PRIMER CONNECTION.
[2] PROVIDE WITH AIR GAP.
[3] PROVIDE WITH VACUUM BREAKER BACKFLOW PREVENTER. PROVIDE FREEZE PROOF HOSE BIBB.
[4] PROVIDE FUNNEL DRAIN.
[5] PROVIDE WITH WASTE BEND AND 1 1/4" IPS TRAP.
[6] PROVIDE EPA WATERSENSE CERTIFIED SHOWER HEADS RATED FOR A MAXIMUM FLOW OF 1.5 GPM @80PSIG AND A MINIMUM FLOW OF 1.1 GPM FROM 45PSIG TO 80PSIG.
[7] PROVIDE WITH VANDAL PROOF AERATOR RATED FOR 0.5 GPM @ 60 PSIG.
[8] PROVIDE WITH VANDAL PROOF AERATOR RATED FOR 1.5 GPM @ 60 PSIG.

DOMESTIC WATER PUMP SCHEDULE

CALLOUT TYPE	CALLOUT MARK	LOCATION	SERVICE	PUMP TYPE	PUMP SPEED	PUMP RPM	PUMP FLOW(GPM)	PUMP TOTAL HEAD(FT)	MOTOR HP	NOTES
DWP	1	MECH ROOM	DOM. HOT WATER RECIRCULATION	IN–LINE	–	3300	4	35	0.36	
DWP	2	MECH ROOM	DOM. HOT WATER RECIRCULATION	IN–LINE	–	3300	4	35	0.36	

SEWAGE VACUUM PUMP SCHEDULE

1

CALLOUT TYPE	CALLOUT MARK	LOCATION	SERVICE	TYPE	SPEED	RPM	FLOW (GPM)	SUCTION HEAD (FT)	DISCHARGE HEAD (FT)	MOTOR HP	NOTES
SVP	1	PIER	SV64	PERISTALTIC	–	–	18	20	79	1.5	
SVP	2	PIER	SV64	PERISTALTIC	–	–	18	20	79	1.5	

SEWAGE LIFT STATION SCHEDULE

CALLOUT TYPE	CALLOUT MARK	LOCATION	SERVICE	TYPE	SPEED	RPM	FLOW (GPM)	TOTAL HEAD (FT)	MOTOR HP	NOTES
SLS	1	PIER	CPB87	SUBMERSIBLE/GRINDER	–	1750	35	71	(2) 5	[1], [2], [3], [4],

SCHEDULE NOTES:
[1] PROVIDE WITH DUPLEX ALTERNATING PUMP CONTROL PANEL
[2] PROVIDE WITH DUPLEX PUMPS. PUMPS TO BE FULLY REDUNDANT
[3] PUMPS TO BE EPOXY COATED, BRONZE IMPELLER, AND EXPLOSION PROOF MOTOR
[4] PROVIDE WITH 60" DIAMETER FIBERGLASS TANK, 54" HIGH

DIESEL FUEL PUMP SCHEDULE

CALLOUT TYPE	CALLOUT MARK	LOCATION	SERVICE	TYPE	SPEED	RPM	FLOW (GPM)	TOTAL HEAD (FT)	MOTOR HP	NOTES
FP	1	PIER	PIER	INLINE PUMP	–	1800	70	68	5.0	

FSi consulting engineers
Seattle, Washington
Solutions & Service

SYM	DESCRIPTION	DATE	APPR
1	AMENDMENT 0003	10/29/15	CMC

NAVFAC

SEAL

BergerABAM
33301 9th Avenue South, Suite 300
Federal Way, Washington 98003-2600
(206) 431-2300 Fax: (206) 431-2250
A/E INFO

APPROVED
FOR COMMANDER NAVFAC
ACTIVITY
SATISFACTORY TO DATE
DES CBL DRW WHB CHK MCE
PM/DM
BRANCH MANAGER
CHIEF ENG/ARCH
FIRE PROTECTION

DEPARTMENT OF THE NAVY
NAVFAC NW
NAVAL FACILITIES ENGINEERING COMMAND
NAVFAC NORTHWEST
SILVERDALE, WASHINGTON
UNITED STATES COAST GUARD AIR STATION/SECTOR FIELD OFFICE
PORT ANGELES, WASHINGTON

FY 2015 MCON P-993, TPS PORT ANGELES
FORWARD OPERATING LOCATION

UTILITIES SCHEDULES - SHEET 1

SCALE: AS SHOWN
EPROJECT NO.: 1291634
CONSTR. CONTR. NO.
NAVFAC DRAWING NO. 16033218
SHEET 255 OF 330
P601

DRAWFORM REVISION: 10 MAY 2014

FILE NAME: I:\14002 P993 USCG Port Angeles\Working Drawings\P993-1291634-P601.dwg PLOTTED 10/29/15 - 2:32pm BY: Chris

DOMESTIC WATER EXPANSION TANK SCHEDULE

CALLOUT				ACCEPTANCE	DIMENSIONS		ORIENTATION	MOUNTING	
TYPE	MARK	LOCATION	VOLUME	VOLUME	DIAMETER	HEIGHT	[1]	[2]	NOTES
DWET	1	MECH ROOM	22.0 GAL	14.5 GAL	1' – 4"	2' – 7"	BLADDER	FLOOR	[1]

SCHEDULE NOTES:
[1] PROVIDE EXPANSION TANK WITH AIR CHARGE PRESSURE = 60 PSIG

ELECTRIC WATER HEATER SCHEDULE

CALLOUT			SERVICE CONDITIONS		RECOVERY CONDITIONS					
TYPE	MARK	LOCATION	ENTERING	LEAVING	CAPACITY (GPH)	TEMP RISE	VOLTS/PH	TOTAL INPUT KW	GAL	NOTES
WH	1	MECH ROOM	45 °F	140 °F	54	90	480/3	12.0	119	[1]
WH	2	MECH ROOM	45 °F	140 °F	54	90	480/3	12.0	119	[1]

SCHEDULE NOTES:
[1] (2) 6 KW ELEMENTS EACH.

DIESEL FUEL TANK SCHEDULE

CALLOUT				ACCEPTANCE	DIMENSIONS		ORIENTATION	MOUNTING	
TYPE	MARK	LOCATION	VOLUME	VOLUME	DIAMETER	HEIGHT			NOTES
FT	1	PIER	10000 GAL	100 GAL	24' – 7"	8' – 0"	HORIZONTAL	FLOOR	DOUBLE WALL DIESEL FUEL STORAGE TANK

FUEL BOX SCHEDULE

CALLOUT					DIMENSIONS		
TYPE	MARK	LOCATION	PRESSURE	FLOW	DIAMETER	HEIGHT	NOTES
FB	1	PIER	20 FT HD	35 GPM	4' – 0"	4' – 0"	PROVIDE WITH FUEL FILTER, ISOLATION VALVE, PRESSURE REDUCING VALVE AND CONTROL VALVE
FB	2	PIER	20 FT HD	35 GPM	4' – 0"	4' – 0"	PROVIDE WITH FUEL FILTER, ISOLATION VALVE, PRESSURE REDUCING VALVE AND CONTROL VALVE
FB	3	PIER	20 FT HD	35 GPM	4' – 0"	4' – 0"	PROVIDE WITH FUEL FILTER, ISOLATION VALVE, PRESSURE REDUCING VALVE AND CONTROL VALVE

PIER CONNECTIONS SCHEDULE

SERVICE	VESSEL	HOSE END CONNECTION TYPE	CONNECTION SIZE	NOTES
FUEL	SV64	GROVED MALE CAM LOCK [1]	1–1/2"	PROVIDE 80' 1–1/2" HOSE ON REEL FOR EACH FLOAT
POTABLE WATER	SV64	MALE IPS CONNECTION	3/4"	PROVIDE 50' 3/4" HOSE FOR EACH FLOAT
RINSE WATER	SV64	FEMALE HOSE END	3/4"	PROVIDE 50' 3/4" HOSE FOR EACH FLOAT
PUMPED WASTE	SV64	UNIVERAL PUMP OUT FITTING [2]	1–1/2"	PROVIDE 60' 1–1/2" HOSE UNIVERSAL PUMP OUT NOZZLE
FRESH WATER	SV64	FEMALE HOSE END	3/4"	PROVIDE 50' 3/4" HOSE FOR EACH FLOAT
FUEL	CPB87	GROVED MALE CAM LOCK [1]	1–1/2"	PROVIDE 70' 1–1/2" HOSE ON REEL
POTABLE WATER	CPB87	FEMALE IPS CONNECTION	3/4"	PROVIDE 65' 3/4" HOSE
PUMPED WASTE	CPB87	GROVED MALE CAM LOCK	1–1/2"	PROVIDE 85' 1–1/2" HOSE
RINSE WATER	CPB87	GROVED MALE CAM LOCK [1]	3/4"	PROVIDE 65' 3/4" HOSE
FRESH WATER	CPB87	FEMALE HOSE END	3/4"	PROVIDE 50' 3/4" HOSE
POTABLE WATER	BV250	FEMALE IPS CONNECTION	1–1/2"	
PUMPED WASTE	BV250	GROVED MALE CAM LOCK	2–1/2"	

SCHEDULE NOTES:
[1] PROVIDE ISOLATION VALVE BETWEEN HOSE END AND CAM LOCK FITTING

[2] PROVIDE WITH SPLASH GUARD

BOOSTER PUMP SCHEDULE

CALLOUT					SPEED	RPM	FLOW (GPM)	INLET PRESSURE (PSI)	DISCHARGE PRESSURE (PSI)	MOTOR HP	NOTES
TYPE	MARK	LOCATION	SERVICE	TYPE							
BP	1	BOOSTER PUMP ENCLOSURE	PIER DOMESTIC WATER	VERTICAL MULTISTAGE	VAR	3500	99	37	165	(2) 7.5	[1] [2] [3]

SCHEDULE NOTES:
[1] PROVIDE ON SKID WITH PUMP CONTROL PANEL

[2] PROVIDE VARIABLE FREQUENCY DRIVE FOR EACH MOTOR

[3] PROVIDE WITH DUPLEX PUMPS 1

HYRDO-PNEUMATIC TANK SCHEDULE

CALLOUT				DIMENSIONS		ORIENTATION	MOUNTING	
TYPE	MARK	LOCATION	VOLUME	DIAMETER	HEIGHT			NOTES
HT	1	BOOSTER PUMP ENCLOSURE	79 GAL	2'–0"	4' – 7"	HORIZONTAL	FLOOR	HYDRO–PNEUMATIC BLADDER TANK

FSi consulting engineers
Seattle, Washington
Solutions & Service

SYM	DESCRIPTION	DATE	APPR
1	AMENDMENT 0003	10/29/15	CMC

NAVFAC

SEAL

BergerABAM
33301 9th Avenue South, Suite 300
Federal Way, Washington 98003-2600
(206) 431-2300 Fax: (206) 431-2250

A/E INFO

APPROVED
FOR COMMANDER NAVFAC
ACTIVITY
SATISFACTORY TO DATE
DES CBL DRW WHB CHK MCE
PM/DM
BRANCH MANAGER
CHIEF ENG/ARCH
FIRE PROTECTION

DEPARTMENT OF THE NAVY
NAVFAC NW
NAVFAC NORTHWEST
NAVAL FACILITIES ENGINEERING COMMAND
SILVERDALE, WASHINGTON
UNITED STATES COAST GUARD AIR STATION/SECTOR FIELD OFFICE
PORT ANGELES, WASHINGTON

FY 2015 MCON P-993, TPS PORT ANGELES
FORWARD OPERATING LOCATION

UTILITIES SCHEDULES - SHEET 2

SCALE: AS SHOWN
EPROJECT NO.: 1291634
CONSTR. CONTR. NO.
NAVFAC DRAWING NO.
16033219
SHEET 256 OF 330
P602
DRAWFORM REVISION: 10 MAY 2014

FILE NAME: L:\14002 P993 USCG Port Angeles\Working Drawings\P993-1291634-P602.dwg PLOTTED: 10/29/15 - 5:40pm BY: Chris

AFF SATELLITE TV DIAGRAM GENERAL NOTES:

1. THE GOVERNMENT WILL COORDINATE SATELLITE TELEVISION SERVICE WITH THE COMMERCIAL SERVICE PROVIDER. THE COMMERCIAL SERVICE PROVIDER SHALL FURNISH AND INSTALL SATELLITE EQUIPMENT AND ENTRANCE CABLING TO THE TELECOMMUNICATIONS ENTRANCE ROOM, HEADEND EQUIPMENT, AMPLIFIERS AND SPLITTERS AS REQUIRED.
2. THE CONTRACTOR SHALL PROVIDE JUNCTION BOXES AT CATV OUTLET LOCATIONS AND 1" CONDUIT WITH PULL STRINGS TO CABLE TRAY OR DIRECTLY TO THE TELECOM ROOM. REFER TO PLAN FOR OUTLET LOCATIONS. PROVIDE 1" CONDUIT WITH PULL STRING FROM THE TELECOM ROOM TO THE SATELLITE DISH LOCATION AT THE ROOF EAVE ON THE WEST SIDE OF THE BUILDING. COORDINATE EXACT LOCATION OF SATELLITE DISH WITH THE COMMERCIAL SERVICE PROVIDER PRIOR TO STARTING ANY WORK.
3. THE COMMERCIAL SERVICE PROVIDER SHALL PROVIDE CATV OUTLETS WITH F-TYPE CABLE TERMINATIONS AND RG6 COAX DROP CABLES FROM THE DEMARCATION FOR A COMPLETE AND USABLE SYSTEM.
4. SCHEDULE A MEETING WITH THE CONTRACTING OFFICER'S REPRESENTATIVE AND THE COMMERCIAL SERVICE PROVIDER TO REVIEW SYSTEM DESIGN. SCHEDULE AND ATTEND SYSTEM TESTING WITH THE CONTRACTING OFFICER'S REPRESENTATIVE AND THE COMMERCIAL SERVICE PROVIDER.

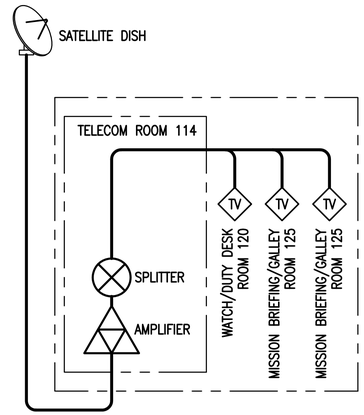

C1 SATELLITE TV SYSTEM RISER DIAGRAM

ALERT FORCE FACILITY — T121
SCALE: NONE

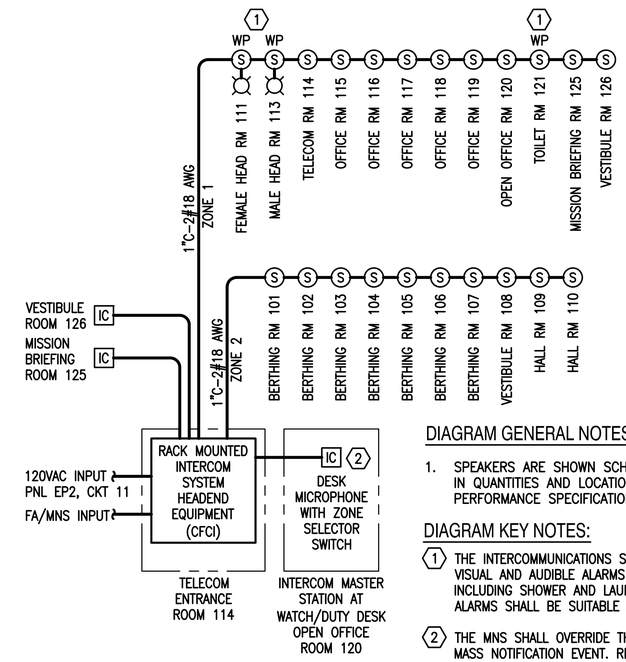

DIAGRAM GENERAL NOTES:

1. SPEAKERS ARE SHOWN SCHEMATIC ONLY. PROVIDE SPEAKERS IN QUANTITIES AND LOCATIONS AS REQUIRED TO COMPLY WITH PERFORMANCE SPECIFICATIONS.

DIAGRAM KEY NOTES:

1. THE INTERCOMMUNICATIONS SYSTEM SHALL INCLUDE SIMULTANEOUS VISUAL AND AUDIBLE ALARMS IN THE MALE AND FEMALE HEADS, INCLUDING SHOWER AND LAUNDRY AREAS. SPEAKERS AND VISUAL ALARMS SHALL BE SUITABLE FOR DAMP LOCATIONS.
2. THE MNS SHALL OVERRIDE THE PUBLIC ADDRESS SYSTEM DURING A MASS NOTIFICATION EVENT. REFER TO FIRE ALARM DRAWINGS FOR MNS MICROPHONE AT THE WATCH DUTY DESK TO ALLOW THE WATCH DUTY OFFICER TO MAKE ANNOUNCEMENTS DURING A MNS EVENT.

C3 INTERCOMMUNICATIONS SYSTEM RISER DIAGRAM

INCLUDING PUBLIC ADDRESS, PAGING AND TALK-BACK FUNCTIONS — T121
ALERT FORCE FACILITY
SCALE: NONE

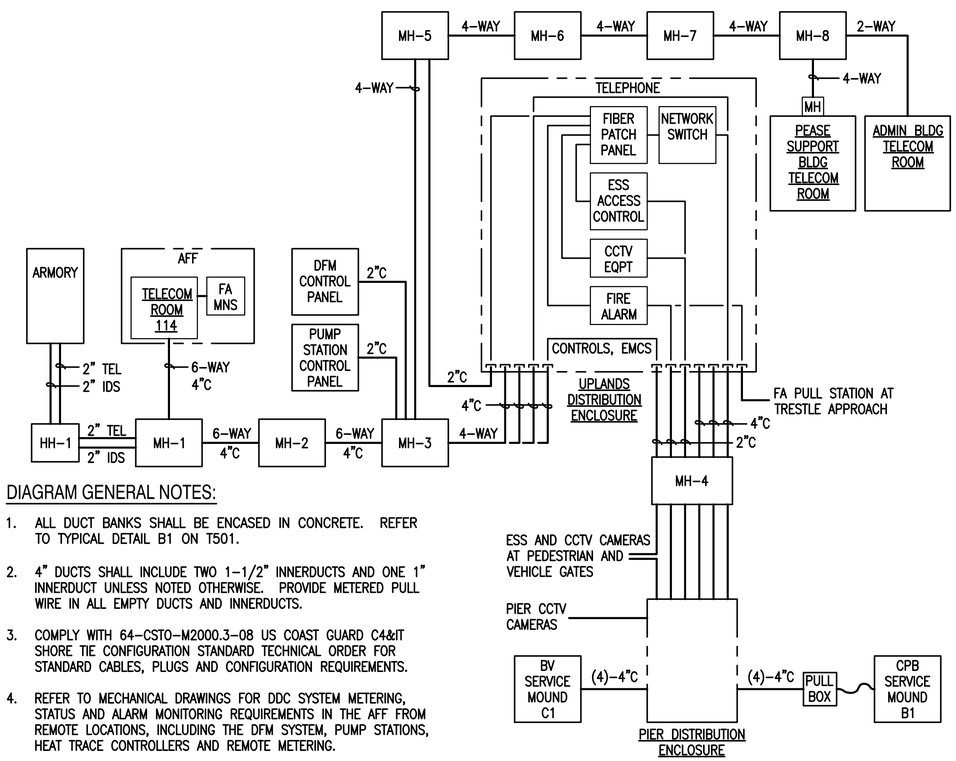

DIAGRAM GENERAL NOTES:

1. ALL DUCT BANKS SHALL BE ENCASED IN CONCRETE. REFER TO TYPICAL DETAIL B1 ON T501.
2. 4" DUCTS SHALL INCLUDE TWO 1-1/2" INNERDUCTS AND ONE 1" INNERDUCT UNLESS NOTED OTHERWISE. PROVIDE METERED PULL WIRE IN ALL EMPTY DUCTS AND INNERDUCTS.
3. COMPLY WITH 64-CSTO-M2000.3-08 US COAST GUARD C4&IT SHORE TIE CONFIGURATION STANDARD TECHNICAL ORDER FOR STANDARD CABLES, PLUGS AND CONFIGURATION REQUIREMENTS.
4. REFER TO MECHANICAL DRAWINGS FOR DDC SYSTEM METERING, STATUS AND ALARM MONITORING REQUIREMENTS IN THE AFF FROM REMOTE LOCATIONS, INCLUDING THE DFM SYSTEM, PUMP STATIONS, HEAT TRACE CONTROLLERS AND REMOTE METERING.
5. REFER TO FIRE ALARM DRAWINGS FOR FIRE ALARM/MNS EQUIPMENT AND DEVICE LOCATIONS AND MONITORING REQUIREMENTS AT THE AFF AND FIRE ALARM DEVICE LOCATIONS AND MONITORING REQUIREMENTS AT THE TRESTLE, PIER AND FLOATS.

A2 TELECOM SYSTEM DISTRIBUTION DIAGRAM

RACEWAY SYSTEMS
SCALE: NONE

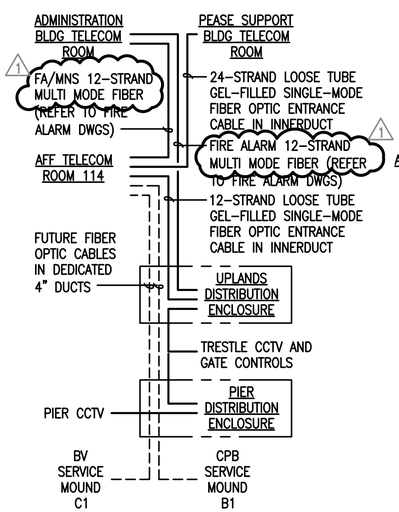

FIBER DISTRIBUTION CABLING DIAGRAM

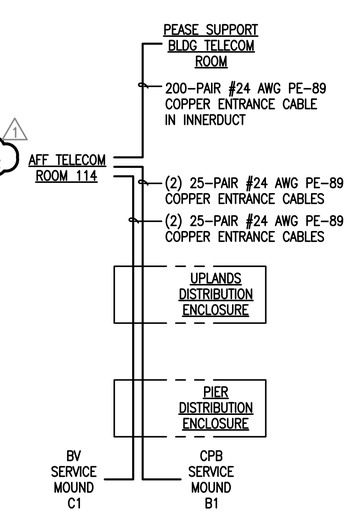

COPPER DISTRIBUTION CABLING DIAGRAM

SYM	DESCRIPTION	DATE	APPR
1	AMMENDMENT 0003	10/29/15	KTL

NAVFAC

BergerABAM
33301 9th Avenue South, Suite 300
Federal Way, Washington 98003-2600
(206) 431-2300 Fax: (206) 431-2250

LANE COBURN & ASSOCIATES
12900 NE 180TH STREET, SUITE 201
BOTHELL, WA 98011
MAIN OFFICE: 425-368-4848
www.lanecoburn.com

DEPARTMENT OF THE NAVY — NAVAL FACILITIES ENGINEERING COMMAND
NAVFAC NW — NAVFAC NORTHWEST — SILVERDALE, WASHINGTON
UNITED STATES COAST GUARD AIR STATION/SECTOR FIELD OFFICE PORT ANGELES, WASHINGTON

FY 2015 MCON P-993, TPS PORT ANGELES FORWARD OPERATING LOCATION

RISER DIAGRAMS - SHEET 2

SCALE: AS NOTED
EPROJECT NO.: 1291634
CONSTR. CONTR. NO.
NAVFAC DRAWING NO. 16033290
SHEET 327 OF 330
T602

DRAWFORM REVISION: 10 MAY 2014

SILENT KNIGHT®

by Honeywell

IntelliKnight®

FIRE ALARM CONTROL COMMUNICATOR

Model 5808

WARNING
HIGH VOLTAGE
DISCONNECT BEFORE SERVICING

122646F