# PROCUREMENT AND INSTALLATION OF FURNITURE, FIXTURES AND EQUIPMENT

## 1.1 GENERAL REQUIREMENTS

Furnishings, Fixtures, and Equipment (FF&E) shall include, but is not limited to, furniture, shop equipment, specialty equipment, appliances, window treatments, accessories, and other miscellaneous items to support facility functions. Weapon racks, drying cages, and lockers are not considered FF&E. FF&E shall be fully integrated with the building systems and finishes. FF&E may also include specialty items for which the customer activity shall be responsible for specifying.

The Contractor shall provide the procurement and installation of all FF&E exactly as designed and specified, or approved as equal by the Government. The Final FF&E package shall be fully integrated with the buildings.

The Contractor shall procure and install the approved Final FF&E package using NAVSUP Blanket Purchase Agreements (BPA's), GSA schedules, and other Federal contracts and complying with priorities found in FAR Part 8.404.

The installers for the FF&E items shall be the manufacturer's approved dealer of record. The Government reserves the right to approve/disapprove the Contractor's FF&E installers.

FF&E items shall be subject to the Buy American Act or Free Trade Agreement.

## 1.2 FF&E PACKAGE PLANNED MODIFICATION

The Government will provide separate funding for procurement and installation of the FF&E package. Construction funds will not be used. Upon receipt of required funding, the Contractor shall be authorized by the Contracting Officer, as a planned modification to the construction contract, to procure and install all Final FF&E using Federal Government price schedules (NAVSUP BPAs and/or GSA). The amount of the modification will be the actual cost of these items from the Federal Government price schedules (NAVSUP BPAs and/or GSA), including any freight and installation charges from the furniture supplier as well as the Contractor's Handling and Administration Rate (HAR). The HAR includes all of the Contractor's effort related to storage, coordination, handling, administration of subcontractors, and all other associated costs and profit for the procurement of FF&E. The Contractor shall propose in the contract solicitation the FF&E HAR. The Contractor's proposed HAR may not exceed 5% of the total FF&E costs, as noted on the bid schedule. ~~The HAR shall not include costs associated with the Interior Design Services required in the base bid~~.

## 1.3 PROCUREMENT AND INSTALLATION

The Contractor shall coordinate the buildings' completion date with the installation dealer(s) specified in the FF&E package.

The FF&E package provided to the Contractor at the modification award shall reflect current pricing certified by the manufacturers and the



Amendment 0005

concrete penetrating sealers that indicate the VOC content of each product.

1.6.3.4 Material Safety Data Sheets

Submit Material Safety Data Sheets (MSDS) for all materials that are regulated for hazardous health effects. MSDS shall be readily accessible during each work shift to employees when they are at the construction site.

1.6.4 Test Reports

1.6.4.1 Fly Ash and Pozzolan

Submit test results in accordance with ASTM C618 for fly ash and pozzolan. Submit test results performed within 6 months of submittal date.

1.6.4.2 Ground Granulated Blast-Furnace Slag

Submit test results in accordance with ASTM C989/C989M for ground granulated blast-furnace slag. Submit test results performed within 6 months of submittal date.

1.6.4.3 Aggregates

~~ASTM C1260 for potential alkali-silica reactions, ASTM C295/C295M for petrographic analysis.~~ See Section 03 31 29 MARINE CONCRETE, part 2.3e and 2.3f.

1.6.5 Field Samples

1.6.6 Quality Control Plan

Develop and submit for approval a concrete quality control program in accordance with the guidelines of ACI 121R and as specified herein. The plan shall include approved laboratories. Provide direct oversight for the concrete qualification program inclusive of associated sampling and testing. Provide all quality control reports to the Contracting Officer, Quality Manager and Concrete Supplier. Maintain a copy of ACI SP-15 and CRSI 10MSP at project site.

1.6.7 Quality Control Personnel Certifications

The Contractor shall submit for approval the responsibilities of the various quality control personnel, including the names and qualifications of the individuals in those positions and a quality control organizational chart defining the quality control hierarchy and the responsibility of the various positions. Quality control personnel shall be employed by the Contractor.

Submit American Concrete Institute certification for the following:

a. CQC personnel responsible for inspection of concrete operations.

b. Lead Foreman or Journeyman of the Concrete Placing, Finishing, and Curing Crews.

c. Field Testing Technicians: ACI Concrete Field Testing Technician, Grade I.

2.3.1.3 Required Average Strength of Mix Design

The selected mixture shall produce an average compressive strength exceeding the specified strength by the amount indicated in ACI 301~~, but may not exceed the specified strength at the same age by more than 20 percent~~. When a concrete production facility has a record of at least 15 consecutive tests, the standard deviation shall be calculated and the required average compressive strength shall be determined in accordance with ACI 301.

2.3.2 Ready-Mix Concrete

Provide concrete that meets the requirements of ASTM C94/C94M.

Ready-mixed concrete manufacturer shall provide duplicate delivery tickets with each load of concrete delivered. Provide delivery tickets with the following information in addition to that required by ASTM C94/C94M:

a. Type and brand cement

b. Cement and complementary cementitious materials content in 94-pound bags per cubic yard of concrete

c. Maximum size of aggregate

d. Amount and brand name of admixtures

e. Total water content expressed by water cementitious material ratio

2.3.3 Concrete Curing Materials

Provide concrete curing material in accordance with ACI 301 Section 5 and ACI 308.1 Section 2. Submit product data for concrete curing compounds. Submit manufactures instructions for placement of curing compound.

2.4 MATERIALS

2.4.1 Cementitious Materials

For exposed concrete, use one manufacturer and one source for each type of cement, ground slag, fly ash, and pozzolan.

2.4.1.1 Fly Ash

ASTM C618, Class F, except that the maximum allowable loss on ignition shall not exceed 2 percent. Class F fly ash for use in mitigating Alkali-Silica Reactivity shall have a Calcium Oxide (CaO) content of less than 8 percent and a total equivalent alkali content less than 1.5 percent.

Add with cement. Fly ash content shall be a maximum of 25 percent by weight of cementitious material, provided the fly ash does not reduce the amount of cement in the concrete mix below the minimum requirements of local building codes. Where the use of fly ash cannot meet the minimum level, provide the maximum amount of fly ash permittable that meets the code requirements for cement content. Report the chemical analysis of the fly ash in accordance with ASTM C311/C311M. Evaluate and classify fly ash in accordance with ASTM D5759.

2.4.1.2 Raw or Calcined Natural Pozzolan

Natural pozzolan shall be raw or calcined and conform to ASTM C618, Class N, including the optional requirements for uniformity and effectiveness in controlling Alkali-Silica reaction and shall have an ignition loss not exceeding 3 percent. Class N pozzolan for use in mitigating Alkali-Silica Reactivity shall have a Calcium Oxide (CaO) content of less than 13 percent and total equivalent alkali content less than 3 percent.

2.4.1.3 Ultra Fine Fly Ash and Ultra Fine Pozzolan

Ultra Fine Fly Ash (UFFA) and Ultra Fine Pozzolan (UFP) shall conform to ASTM C618, Class F, and the following additional requirements:

a. The strength activity index at 28 days of age shall be at least 95 percent of the control specimens.

b. The average particle size shall not exceed 6 microns.

c. The sum of $SiO_2$ + $Al_2O_3$ + $Fe_2O_3$ shall be greater than 77 percent.

2.4.1.4 Ground Granulated Blast-Furnace Slag

ASTM C989/C989M, Grade 120. Slag content shall be a maximum of 50 percent by weight of cementitious material.

2.4.1.5 Portland Cement

Provide cement that conforms to ASTM C150/C150M, Type I/II ~~Type I~~, low alkali with tri-calcium aluminates (C3A) content less than 10 percent and a maximum cement-alkali content of 0.80 percent $Na_2O_e$ (sodium oxide) equivalent. Use one brand and type of cement. If Fly Ash and Ground Granulated Blast-Furnace Slag are used, do not exceed 50 percent of the cementation material.

2.4.2 Water

Comply with the requirements of ASTM C1602/C1602M. Minimize the amount of water in the mix. Improve workability by adjusting the grading rather than by adding water. Water shall be free from injurious amounts of oils, acids, alkalis, salts, organic materials, or other substances deleterious to concrete. Submit test report showing water complies with ASTM C1602/C1602M.

2.4.3 Aggregates

ASTM C33/C33M, except as modified herein. Furnish aggregates for exposed concrete surfaces from one source. Provide aggregates that do not contain any substance which may be deleteriously reactive with the alkalies in the cement. Submit test report showing compliance with ASTM C33/C33M.

Fine and coarse aggregates shall show expansions less than 0.08 percent at 28 days after casting when testing in accordance with ASTM C1260. Should the test data indicate an expansion of 0.08 percent or greater, reject the aggregate(s) or perform additional testing using ASTM C1567 using the Contractor's proposed mix design. In this case, include the mix design low alkali Portland cement and one of the following supplementary cementitious materials:

1.7.4 Concrete Qualification Program

1.7.4.1 Fresh Concrete Properties

a. Air Content: Conform to the air limits specified in ACI 301 for exposure and the aggregate size used and tested in accordance with ASTM C231/C231M for air-entrained concrete.

b. Slump: Proportion each concrete mixture to have, at the point of deposit, a maximum slump of 4 inches as determined by ASTM C143/C143M when admixtures that affect slump are not used. Do not exceed 8 inches where an ASTM C494/C494M, Type F or G admixture is used. Comply with the requirements of ACI 117 for slump tolerances.

c. Self-Consolidating Concrete proportion and test for qualification using the following:

(1) ASTM C1611/C1611M, slump flow less than or equal to 24 inches, with visual stability index not greater than 1.

(2) ASTM C1621/C1621M, passing ability using the J-ring with spread within 1 inch less than the slump flow.

(3) Passing Ability Using the L-Box between 4 and 8 seconds.

(4) ASTM C1610/C1610M, static segregation less than 4.0 percent.

d. Underwater concrete: Placed using the tremie technique unless an alternate technique is approved by the Contracting Officer. Proportion concrete to be cohesive and flow with minimal segregation. Viscosity modifying admixtures are permitted for underwater concrete. Follow proportioning guidance in ACI 304R. Perform a trial placement and submit to the Contracting Officer for approval. Do not place concrete underwater prior to receiving approval.

1.7.4.2 Hardened Concrete Properties

a. Average Compressive Strength: Determine the minimum required average compressive strength denoted as f'cr for qualification of concrete mixtures and for quality acceptance testing. A compressive strength test result is defined as the mean of three properly conducted tests on 4 by 8 inch cylinders in accordance with ASTM C39/C39M. In addition, meet the following requirements.

(1) Specified Compressive Strength: Denoted as f'c, the design strength at 28 days except use 56 days for concrete containing 50 percent or more fly ash.

(2) Required Average Strength: Proportion concrete such that f'cr exceeds f'c per ACI 301.

~~(3) f'cr may not exceed f'c at the same age by more than 20 percent unless approved by the Contracting Officer. Precast elements, including the channel beams, stage 1 cap beams, small craft floats, and water quality catch basins, may exceed the concrete strength by 20 percent.~~

b. Water Soluble Chloride Ion Content: Determine the chloride ion content only for qualification of concrete mixtures. Determine water soluble chloride ion content in accordance with ASTM C1218/C1218M. The limits for allowable water-soluble chloride ion concentrations in hardened concrete are listed in Table 3.

3.8.1.4 Unit Weight Test

ASTM C138/C138M. Take concrete samples during concrete placement. Perform tests at commencement of concrete placement, when test cylinders are made, and for each batch (minimum) or every 50 cubic yards (maximum) of concrete.

3.8.2 Hardened Concrete Properties

Sample and test each lot at 100 cubic yards.

Cast and cure specimens in accordance with ASTM C172/C172M, ASTM C31/C31M, and applicable requirements of ACI 305R and ACI 306R.

For each lot, record the date and time sampled, the batch ticket code, cylinder ID code the location of placement, total volume of concrete represented by the sample, and fresh concrete properties; ASTM C143/C143M for slump or ASTM C1611/C1611M for slump flow and visual stability index (VSI), ASTM C231/C231M for air content, ASTM C1064/C1064M for temperature, and ASTM C138/C138M unit weight.

For each lot sample, cast twelve 6 by 12 inch cylinder specimens for strength. Package cylinders to prevent damage and ship priority mail to the approved testing laboratory.

3.8.2.1 Compressive Strength Tests

ACI 214R tests for compressive strength - conduct strength tests of concrete during construction in accordance with the following procedures:

a. Test cylinders in accordance with ASTM C39/C39M. Test three cylinders at 3 days, three cylinders at 7 days, and three cylinders at the age when the compressive strength requirement was specified. Hold the remaining three cylinders in storage. If one specimen in a test shows evidence of improper sampling, molding or testing, discard the specimen and consider the strength of the remaining cylinder to be the test result. If more than one specimen shows excess defects, the Contracting Officer may allow the entire test to be discarded. ~~Test results shall not exceed the specified compressive strength by more than 20 percent for the age specified, except for the precast elements described in 1.7.4.2~~.

b. If the average strength test results are less than the specified strength f'c extract three core samples from the structure in accordance with ASTM C42/C42M, from the area that correlates to the low test results. These extracted cores shall not contain steel reinforcing. Repair core holes with non-shrink grout. Match color and finish of adjacent concrete. For concrete not meeting strength criteria the Contractor shall prepare a remediation strategy for the review by the Contracting Officer.

c. Provide strength test reports within 7 days of test completion.

3.8.2.2 Chloride Ion Concentration

Comply with ACI 318. Determine water soluble chloride ion concentration. Perform test once for each mix design. The limits for average chloride ion

content are provided in Table 3.

3.8.2.3 Non-Destructive Tests

Use of a rebound hammer to obtain data on the strength of the concrete surface shall be in accordance with ASTM C805/C805M. Test results from the rebound hammer and other non-destructive testing may be helpful in selecting areas to extract concrete cores for destructive testing.

3.8.3 Core Samples and Compressive Strength Testing

Obtain and test cores in accordance with ASTM C42/C42M.

Acceptance criteria for cylinder compressive strength are provided in subpart entitled "Acceptance of Concrete Strength".

Take at least three representative cores from each member or area of concrete in place that is considered potentially strength deficient. Impair the strength of the structure as little as possible. If, before testing, extracted cores show evidence of having been damaged subsequent to or during removal from the structure, take replacement cores.

Fill core holes with low slump concrete of a compressive strength equal to or greater than the original concrete.

The Contracting Officer will evaluate and validate core tests in accordance with the specified procedures.

3.8.4 Acceptance of Concrete Strength

3.8.4.1 Standard Molded and Cured Strength Specimens

Base the acceptance of concrete strengths on averages of results from three consecutive compressive strength tests. When the averages of all sets of three consecutive compressive strength test results are ~~between 1.0 and 1.2 times~~ greater than the field test strength (fcr), and no individual strength test falls below fcr by more than 500 psi, the strength of the concrete is satisfactory. Also apply these criteria when accelerated strength testing is specified unless another basis for acceptance is specified. ~~For the precast elements described in 1.7.4.2, there is no maximum on tested strength.~~

3.8.4.2 Non-Destructive Tests

Non-destructive tests may be used when permitted to evaluate concrete where standard molded and cured cylinders have yielded results not meeting the criteria.

3.8.4.3 Extracted Core Tests

When the average compressive strengths of the representative cores are, at a minimum, ~~between~~ 0.85 fcr, ~~and 1.2 fcr~~ and if no single core is less than 0.75 fcr, the strength of concrete is satisfactory. ~~For the precast elements described in 1.7.4.2, there is no maximum on tested strength.~~

3.8.5 Inspection

ACI 311.4R. Inspect concrete placed under water with qualified divers approved by the Contracting Officer.

Copy of Certificate Documents of Coating Inspector(s); G

1.3 Services of Coating Inspector

The Contractor shall obtain the services of a 3rd party Coating Inspector(s) to supervise, inspect and test the installation of the coating system(s). Coating Inspector refers to a person accredited or certified by the NACE International at the level of Coating Inspector (CIP Level 3). Such person(s) shall have no less than five years of experience in the application of protective coatings applied for use with marine structures and submerged structures. The Contractor shall submit evidence of the qualifications of each Coating Inspector to the Contracting Officer for review and approval.

1.4 ENVIRONMENTAL CONDITIONS

Start work only when ambient and curing temperatures are within limits of coating manufacturer's recommendations and at least 5 degrees F above dew point temperature.

1.5 SAFETY AND HEALTH PRECAUTIONS

Follow safety procedures as recommended by manufacturer. Work in a well ventilated area. Provide, and require workers to use, impervious clothing, gloves, face shields (8 inch minimum), and other appropriate protective clothing necessary to prevent eye and skin contact with coating materials. Keep coatings away from heat, sparks and flame.

~~1.6 SERVICE LIFE~~

~~The coating system in combination with the cathodic protection system shall provide a 50-year service life.~~

1.7 QUALITY ASSURANCE

Each painter must have a minimum of three years' experience in performing the type of work outlined in this specification. Contractor shall provide to Contracting Officer evidence of painter qualifications upon request.

PART 2 PRODUCTS

2.1 COATING SYSTEMS

2.1.1 Coating

Provide an epoxy-polyamide coating consisting of a two-component system that includes a pigmented polyamide resin, Component A and an epoxy resin, Component B. Additionally, include a converter or catalyst to activate the chemical reaction. Use contrasting colors for prime, intermediate, and finish coats. The finish coat color shall be black.

Provide catalyst component for coating specific for resin component. Use thinners which are compatible with the coating.

2.1.1.1 Epoxy-Polyamide

a. System: SSPC PS 13.01

b. Paints: SSPC Paint 22, Primer, Intermediate and Top Coats

Color chips; G

1.3 DELIVERY, HANDLING, AND STORAGE

Deliver lockers and associated materials in their original packages, containers, or bundles bearing the manufacturer's name and the name of the material. Protect from weather, soil, and damage during delivery, storage, and construction.

1.4 FIELD MEASUREMENTS

To ensure proper fits, make field measurements prior to the preparation of drawings and fabrication. Verify correct location.

1.5 QUALITY ASSURANCE

1.5.1 Color Chips

Provide a minimum of three color chips, not less than 3 inches square, of each color indicated.

Government may request performance-characteristic tests on assembled lockers. Tests and results must conform to FS AA-L-00486. Lockers not conforming will be rejected.

PART 2 PRODUCTS

2.1 TYPES

Locker must have the following type and size in the location and quantities indicated. Locker finish colors will be as scheduled.

2.1.1 Single-tier Lockers

Single-tier lockers must be as follows:

Type STL-1: Welded wire mesh gear locker, single-tier locker 24 inches wide, 24 inches deep, and ~~78~~ 72 inches high, attached to ~~6 inch high~~ closed base for an overall height of approximately 78 inches. All welded construction.

2.2 MATERIAL

2.2.1 Galvanized Steel Sheet

ASTM A653/A653M and ASTM A924/A924M, commercial quality, minimized spangle, galvanized steel sheet with not less than G60 zinc coating. Prepare surface of sheet for painting in accordance with ASTM D6386, Method A. Minimum uncoated sheet thickness as specified.

2.2.2 Mesh

2 inch square, 10 gage welded wire mesh.

2.2.3 Finish

FS AA-L-00486. Powder-coated.

2.1.3 Pipe Insulation Material

Insulation shall be as specified in Section 23 07 00 THERMAL INSULATION FOR MECHANICAL SYSTEMS.

2.1.4 Pier Potable Water Hose

Pier potable water hose shall be heavy duty water discharge hose. Tube shall be constructed of SBR (Styrene Butadiene) with textile reinforcement. Hose shall be designed for working pressures of the system. The hose shall include a premium grade cover for protection against the outdoor elements with UV protection.

2.2 PIPE HANGERS, INSERTS, AND SUPPORTS

Pipe hangers, inserts, and supports shall conform to MSS SP-58 and MSS SP-69.

2.3 VALVES

Valves shall be provided on supplies to equipment and fixtures. Valves 2-1/2 inches and smaller shall be bronze with threaded bodies for pipe and solder-type connections for tubing. For valves on the pier, isolation valves 2-1/2 inches and smaller shall be ball valves. Valves 3 inches and larger shall have flanged iron bodies and bronze trim. For valves on the pier, isolation valves 3 inches and larger shall be butterfly valves. Pressure ratings shall be based upon the application. Grooved end valves may be provided if the manufacturer certifies that the valves meet the performance requirements of applicable MSS standard. Valves shall conform to the following standards:

| Description | Standard |
|---|---|
| Butterfly Valves | MSS SP-67 |
| Cast-Iron Gate Valves, Flanged and Threaded Ends | MSS SP-70 |
| Cast-Iron Swing Check Valves, Flanged and Threaded Ends | MSS SP-71 |
| Ball Valves with Flanged Butt-Welding Ends for General Service | MSS SP-72 |
| Ball Valves Threaded, Socket-Welding, Solder Joint, Grooved and Flared Ends | MSS SP-110 |
| Cast-Iron Plug Valves, Flanged and Threaded Ends | MSS SP-78 |
| Bronze Gate, Globe, Angle, and Check Valves | MSS SP-80 |
| Steel Valves, Socket Welding and Threaded Ends | ASME B16.34 |
| Cast-Iron Globe and Angle Valves, Flanged and Threaded Ends | MSS SP-85 |
| Backwater Valves | ASME A112.14.1 |
| Vacuum Relief Valves | ANSI Z21.22/CSA 4.4 |

2.12.2.2 Sleeves Not in Masonry and Concrete

Provide 26 gage galvanized steel sheet or PVC plastic pipe sleeves.

2.12.3 Pipe Hangers (Supports)

Provide MSS SP-58 and MSS SP-69, Type 1 with adjustable type steel support rods, except as specified or indicated otherwise. Attach to steel joists with Type 19 or 23 clamps and retaining straps. Attach to Steel W or S beams with Type 21, 28, 29, or 30 clamps. Attach to steel angles and vertical web steel channels with Type 20 clamp with beam clamp channel adapter. Attach to horizontal web steel channel and wood with drilled hole on centerline and double nut and washer. Attach to concrete with Type 18 insert or drilled expansion anchor. Provide Type 40 insulation protection shield for insulated piping.

2.12.4 Nameplates

Provide 0.125 inch thick melamine laminated plastic nameplates, black matte finish with white center core, for equipment, gages, thermometers, and valves; valves in supplies to faucets will not require nameplates. Accurately align lettering and engrave minimum of 0.25 inch high normal block lettering into the white core. Minimum size of nameplates shall be 1.0 by 2.5 inches. Key nameplates to a chart and schedule for each system. Frame charts and schedules under glass and place where directed near each system. Furnish two copies of each chart and schedule.

2.12.5 Labels

Provide labels for sensor operators at flush valves and faucets. Include the following information on each label:

a. Identification of the sensor and its operation with written and Braille description.

b. Range of the sensor.

c. Battery replacement schedule.

2.12.6 Expansion Joints

Flexible hose expansion loops shall be manufactured complete with two parallel sections of corrugated metal house, compatible braid, 180 deg return bend, with inlet and outlet connections. Field fabricated loops shall not be acceptable. Flexible loops shall be capable of movement in the ±X, ±Y, and ±Z planes. Flexible hose expansion loops shall impart no thrust loads to system support, anchors or building structure.

For diesel service up to 4”, flexible expansion loops shall be CSA / AGA certified.

304 Stainless Steel braid shall be used for any series 300 stainless steel hose. Bronze braid shall be used for any bronze hose. Fittings Materials of construction and end fitting type shall be consistent with pipe material and equipment/ pipe connection fittings. Copper fittings shall not be attached to stainless steel hose. Flexible hose expansion loops shall have a factory supplied, hanger / support lug located at the bottom of the 180deg return. Flexible hose expansion loop(s) shall be furnished with a plugged FPT to be used for a drain or air release vent.

## 2.13 ELECTRICAL HEAT TRACING OF PIER PUMPED SEWAGE

Provide heat trace systems for pipes, valves, and fittings of the pier pumped sewage system that are in accordance with IEEE 515 and be UL listed. System include all necessary components, including heaters and controls to prevent freezing.

Provide self-regulating heaters consisting of two 16 AWG tinned-copper bus wires embedded in parallel in a self-regulating polymer core that varies its power output to respond to temperature along its length. Ensure heater is able to be crossed over itself without overheating. Obtain approval before used directly on plastic pipe. Cover heater with a radiation cross-linked modified polyolefin dielectric jacket in accordance with ASTM D2308.

Provide heater with self-regulating factor of at least 90 percent, in order to provide energy conservation and to prevent overheating.

Operate heater on line voltages of 208 volts without the use of transformers.

2.2.13 Sealants

Sealants shall be chosen from the butyl polymer type, the styrene-butadiene rubber type, or the butyl type of sealants. Sealants shall have a maximum permeance of 0.02 perms based on Procedure B for ASTM E96/E96M, and a maximum flame spread index of 25 and a maximum smoke developed index of 50 when tested in accordance with ASTM E84.

2.3 PIPE INSULATION SYSTEMS

Insulation materials shall conform to Table 1. Insulation thickness shall be as listed in Table 2 and meet or exceed the requirements of ASHRAE 90.1 - IP. ~~Insulation thickness shall be 1inch.~~ Pipe insulation materials shall be limited to those listed herein and shall meet the following requirements:

2.3.1 Aboveground Cold Pipeline (-30 to 60 degrees F)

Insulation for outdoor, indoor, exposed or concealed applications, shall be as follows.

2.3.1.1 Cellular Glass

ASTM C552, Type II, and Type III. Supply the insulation from the fabricator with (paragraph WHITE VAPOR RETARDER ALL SERVICE JACKET (ASJ)) ASJ vapor retarder and installed with all longitudinal overlaps sealed and all circumferential joints ASJ taped or supply the insulation unfaced from the fabricator and install with all longitudinal and circumferential joints sealed with vapor barrier mastic.

2.3.1.2 Flexible Elastomeric Cellular Insulation

Closed-cell, foam- or expanded-rubber materials containing anti-microbial additive, complying with ASTM C534/C534M, Grade 1, Type I or II. Type I, Grade 1 for tubular materials. Type II, Grade 1, for sheet materials. Type I and II shall have vapor retarder/vapor barrier skin on one or both sides of the insulation, and require an additional exterior vapor retarder covering for high relative humidity and below ambient temperature applications.

2.3.2 Aboveground Hot Pipeline (Above 60 degrees F)

Insulation for outdoor, indoor, exposed or concealed applications shall meet the following requirements. Supply the insulation with manufacturer's recommended factory-applied jacket/vapor barrier.

2.3.2.1 Flexible Elastomeric Cellular Insulation

Closed-cell, foam- or expanded-rubber materials containing anti-microbial additive, complying with ASTM C534/C534M, Grade 1, Type I or II to 220 degrees F service. Type I for tubular materials. Type II for sheet materials.

2.3.3 Aboveground Tempered Pipeline (60 - 119 deg.F)

Insulation for outdoor, indoor, exposed or concealed applications shall meet the following requirements. Supply the insulation with manufacturer's recommended factory-applied jacket/vapor barrier.

| TABLE 2 | | | | | | |
|---|---|---|---|---|---|---|
| Piping Insulation Thickness (inch)<br>Do not use integral wicking material in Chilled water applications exposed to outdoor ambient conditions in climatic zones 1 through 4. | | | | | | |
| Service | | | | | | |
| | Material | Tube And Pipe Size (inch) | | | | |
| | | <1 | 1-<1.5 | 1.5-<4 | 4-<8 | > or = >8 |
| Cold Domestic Water Piping, Makeup Water & Drinking Fountain Drain Piping | | | | | | |
| | Cellular Glass | 1.5 | 1.5 | 1.5 | 1.5 | 1.5 |
| | Flexible Elastomeric Cellular | 1 | 1 | 1 | N/A | N/A |
| Hot Domestic Water Supply & Recirculating Piping (Max 200 F) | | | | | | |
| | Cellular Glass | 1.5 | 1.5 | 1.5 | 2 | 2 |
| | Flexible Elastomeric Cellular | 1 | 1 | 1 | N/A | N/A |
| Tempered Water (Max 120 F) | | | | | | |
| | Cellular Glass | 1.5 | 1.5 | 1.5 | 2 | 2 |
| | Flexible Elastomeric Cellular | 1 | 1 | 1 | N/A | N/A |
| Refrigerant Suction Piping (35 degrees F nominal) | | | | | | |
| | Flexible Elastomeric Cellular | 1 | 1 | 1 | N/A | N/A |
| | Cellular Glass | 1.5 | 1.5 | 1.5 | 1.5 | 1.5 |
| Exposed Lavatory Drains, Exposed Domestic Water Piping & Drains to Areas for Handicapped Personnel | | | | | | |
| | Flexible Elastomeric Cellular | 0.5 | 0.5 | 0.5 | 0.5 | 0.5 |
| Horizontal Roof Drain Leaders (Including Underside of Roof Drain Fittings) | | | | | | |
| | Cellular Glass | 1.5 | 1.5 | 1.5 | 1.5 | 1.5 |
| | Flexible Elastomeric Cellular | 1 | 1 | 1 | N/A | N/A |
| Condensate Drain Located Inside Building | | | | | | |
| | Cellular Glass | 1.5 | 1.5 | 1.5 | 1.5 | 1.5 |
| | Flexible Elastomeric Cellular | 1 | 1 | 1 | N/A | N/A |
| Cold Water and Pumped Waste Offshore Pier Piping | | | | | | |
| | Cellular Glass | 1.5 | 1.5 | 1.5 | 1.5 | 1.5 |
| | Flexible Elastomeric Cellular | 1 | 1 | 1 | N/A | N/A |
| Diesel Fuel Piping | | | | | | |
| | Flexible Elastomeric Cellular | 1 | 1 | 1 | 1 | 1 |

### 3.2.2 Aboveground Cold Pipelines

The following cold pipelines for minus 30 to plus 60 degrees F, shall be insulated in accordance with Table 2 except those piping listed in

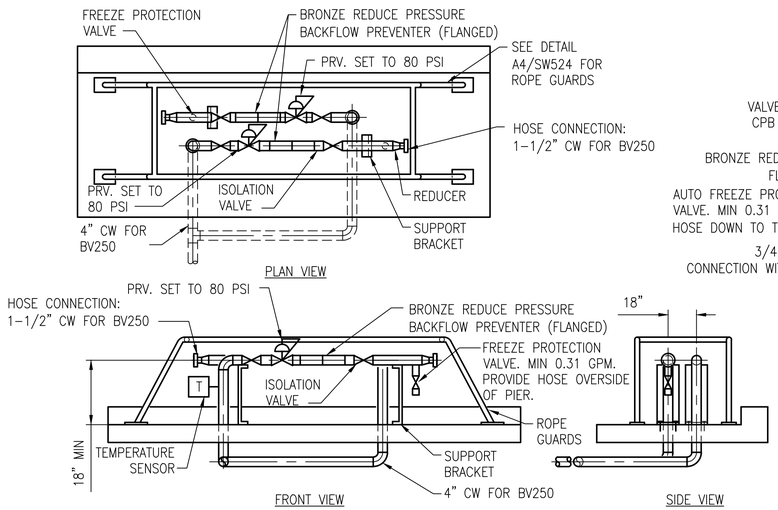


C1 PIER POTABLE WATER OUTLET ASSEMBLY DETAIL
SCALE: NONE P103

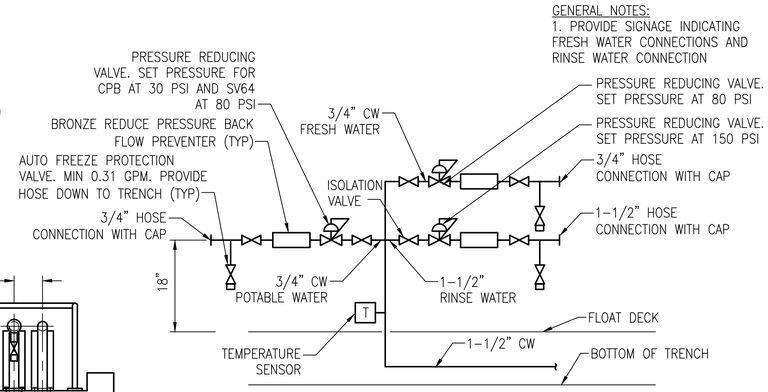


C2 FLOAT WATER RISER DETAIL
SCALE: NONE P104

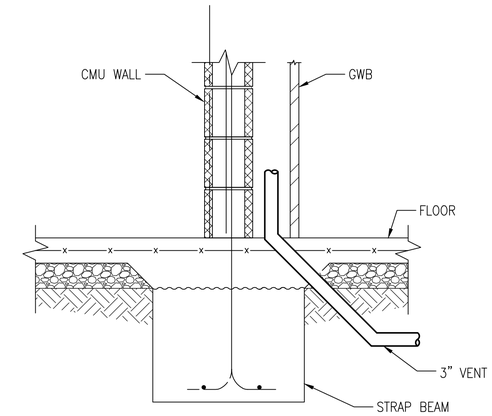


C4 PIPE SLAB PENETRATION DETAIL
SCALE: NONE P111

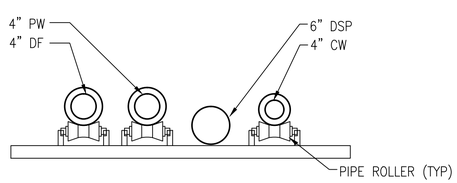


B1 UTILITY RACK ON TRESTLE
SCALE: 1/2" = 6" P102, P103

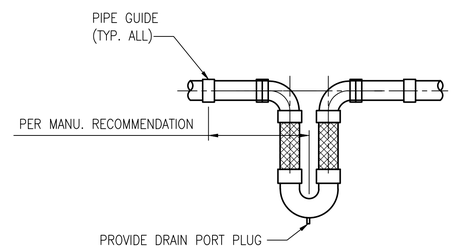


B2 THERMAL EXPANSION JOINT
SCALE: NONE P102, P103

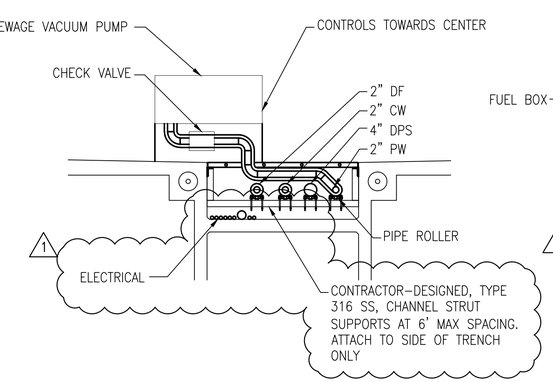


B3 SV64 FLOAT TRENCH DETAIL
SCALE: 1/2" = 1' P104

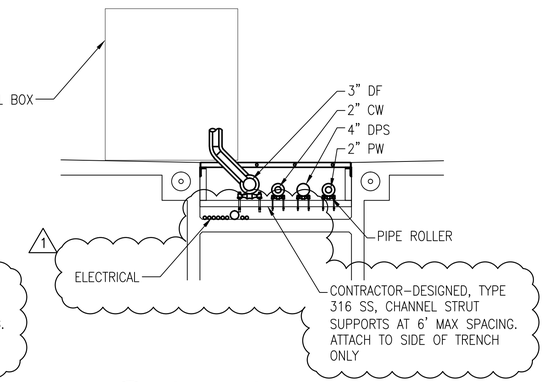


B4 SV64 FLOAT TRENCH DETAIL
SCALE: 1/2" = 1' P104

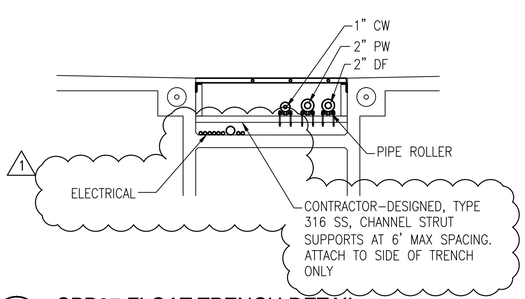


A1 CPB87 FLOAT TRENCH DETAIL
SCALE: 1/2" = 1' P103, P104

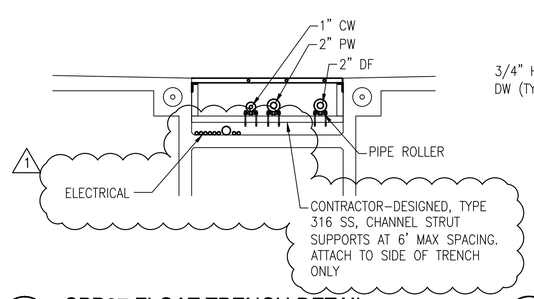


A2 CPB87 FLOAT TRENCH DETAIL
SCALE: 1/2" = 1' P104

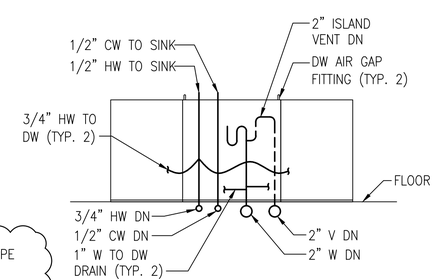


NOTE: PROVIDE WATER HAMMER SHOCK ARRESTOR TO DISHWASHER PIPING.

A3 KITCHEN SINK-DISHWASHER DETAIL
SCALE: NONE –

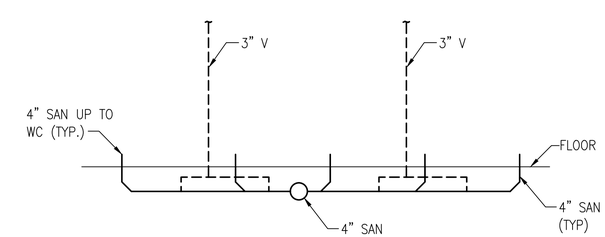


A4 WATER CLOSET PIPE SLAB PENETRATION
SCALE: NONE –

| | | | | | |
|---|---|---|---|---|---|
| 1 | AMENDMENT 0005 | 11/17/15 | CMC | | |
| SYM | DESCRIPTION | DATE | APPR | | |

NAVFAC

BergerABAM
33301 9th Avenue South, Suite 300
Federal Way, Washington 98003-2600
(206) 431-2300 Fax: (206) 431-2250
A/E INFO

APPROVED
FOR COMMANDER NAVFAC
ACTIVITY
SATISFACTORY TO DATE
DES CBL DRW WHB CHK MCE
PM/DM
BRANCH MANAGER
CHIEF ENG/ARCH
FIRE PROTECTION

DEPARTMENT OF THE NAVY
NAVFAC NW
UNITED STATES COAST GUARD AIR STATION/SECTOR FIELD OFFICE
NAVAL FACILITIES ENGINEERING COMMAND
NAVFAC NORTHWEST
SILVERDALE, WASHINGTON
PORT ANGELES, WASHINGTON

FY 2015 MCON P-993, TPS PORT ANGELES
FORWARD OPERATING LOCATION

UTILITIES DETAILS - SHEET 3

SCALE: AS SHOWN
EPROJECT NO.: 1291634
CONSTR. CONTR. NO.
NAVFAC DRAWING NO. 16033216
SHEET 253 OF 330
P503

FSi consulting engineers
Seattle, Washington
Solutions & Service

DRAWFORM REVISION: 10 MAY 2014

FILE NAME: \\14002 P993 USCG Port Angeles\Working Drawings\P993-1291634-P503.dwg PLOTTED: 11/23/15 - 10:39am BY: Chris

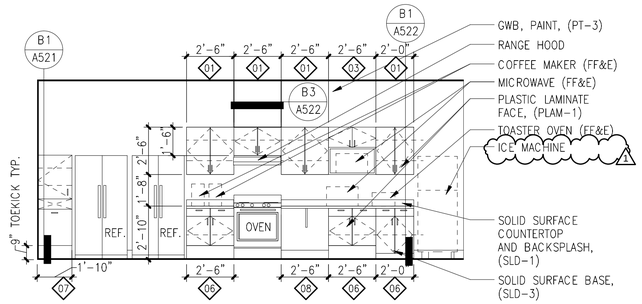


D1 GALLEY 128-EAST
SCALE: 1/4" = 1'-0" A401

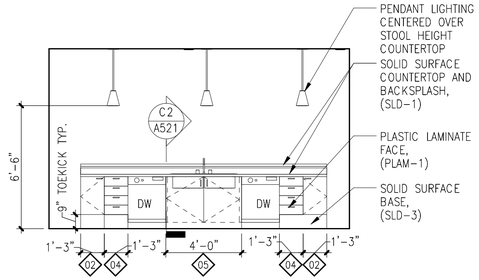


D2 GALLEY 128 - WEST
SCALE: 1/4" = 1'-0" A401

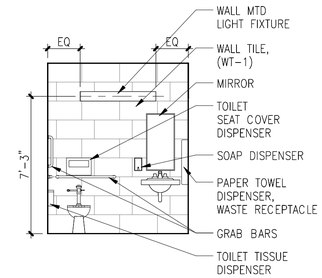


D3 TOILET 121-WEST
SCALE: 1/4" = 1'-0" A401

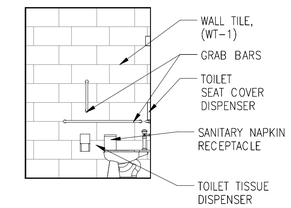


D4 TOILET 121-SOUTH
SCALE: 1/4" = 1'-0" A401

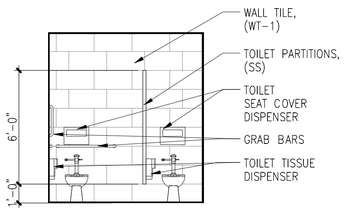


C1 FEMALE HEAD 111-NORTH
SCALE: 1/4" = 1'-0" A401

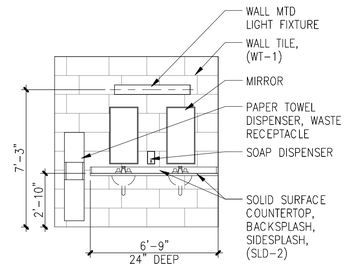


C2 FEMALE HEAD 111-SOUTH
SCALE: 1/4" = 1'-0" A401

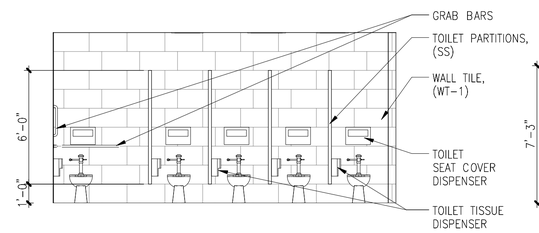


C3 MALE HEAD 113 - NORTH
SCALE: 1/4" = 1'-0" A401

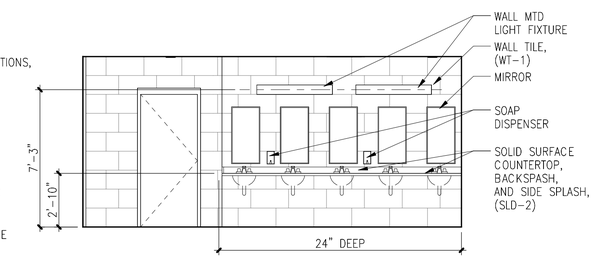


C4 MALE HEAD 113 - EAST
SCALE: 1/4" = 1'-0" A401

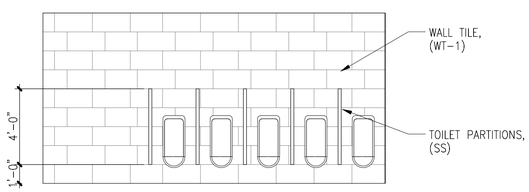


B1 MALE HEAD 113 - SOUTH
SCALE: 1/4" = 1'-0" A401

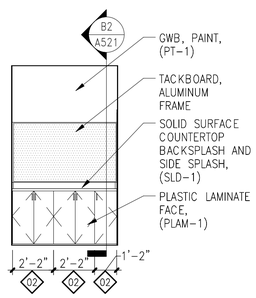


B2 RECYCLING CENTER
SCALE: 1/4" = 1'-0" A401

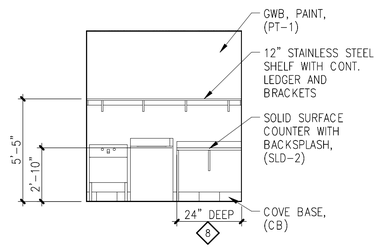


B3 FEMALE HEAD 111-WASHER
SCALE: 1/4" = 1'-0" A401

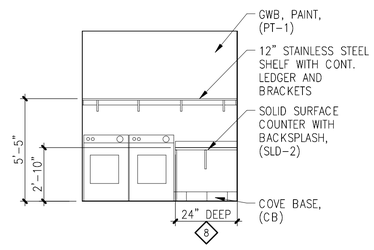


B4 FEMALE HEAD 111-DRYER
SCALE: 1/4" = 1'-0" A401

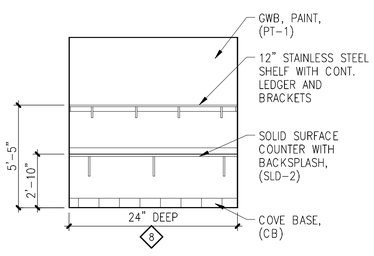


A1 MALE HEAD 113-WASH/DRY
SCALE: 1/4" = 1'-0" A401

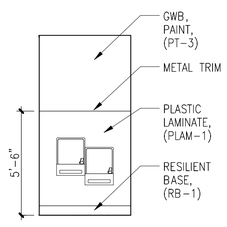


A2 DRINKING FOUNTAIN
SCALE: 1/4" = 1'-0" A401

4' 0 4' 8'
SCALE: 1/4" = 1'-0"

Helix design group
6021 12th street east
suite 201
tacoma, wa. 98424
tel: 253.922.9037
fax: 253.922.6499

| SYM | DESCRIPTION | DATE | APPR. |
|---|---|---|---|
| 1 | AMENDMENT 0005 | 11/17/15 | LC |

NAVFAC

BergerABAM
33301 9th Avenue South, Suite 300
Federal Way, Washington 98003-2600
(206) 431-2300 Fax: (206) 431-2250

APPROVED
FOR COMMANDER NAVFAC
ACTIVITY
SATISFACTORY TO
DES LD | DRW WCS | CHK LC
PM/DM DM/SC
BRANCH MANAGER
CHIEF ENG/ARCH
FIRE PROTECTION

DEPARTMENT OF THE NAVY
NAVFAC, NW
NAVFAC NORTHWEST
NAVAL FACILITIES ENGINEERING COMMAND
UNITED STATES COAST GUARD AIR STATION/SECTOR FIELD OFFICE PORT ANGELES, WASHINGTON
SILVERDALE, WASHINGTON

FY 2015 MCON P-993, TPS PORT ANGELES
FORWARD OPERATING LOCATION
INTERIOR ELEVATIONS

SCALE: 1/4" = 1'-0"
EPROJECT NO.: 1291634
CONSTR. CONTR. NO.
NAVFAC DRAWING NO. 16033165
SHEET 202 OF 330
A412



PLOTTED: 11/23/2015 11:05:31 AM PROJECT: a10-000 FY 2015 MCON P-993, TPS PORT ANGELES FORWARD OPERATING LOCATION
FILE PATH: C:\Users\wills.000\Desktop\Revit Projects - Willa\a14-002-TPS Facility_wills.rvt