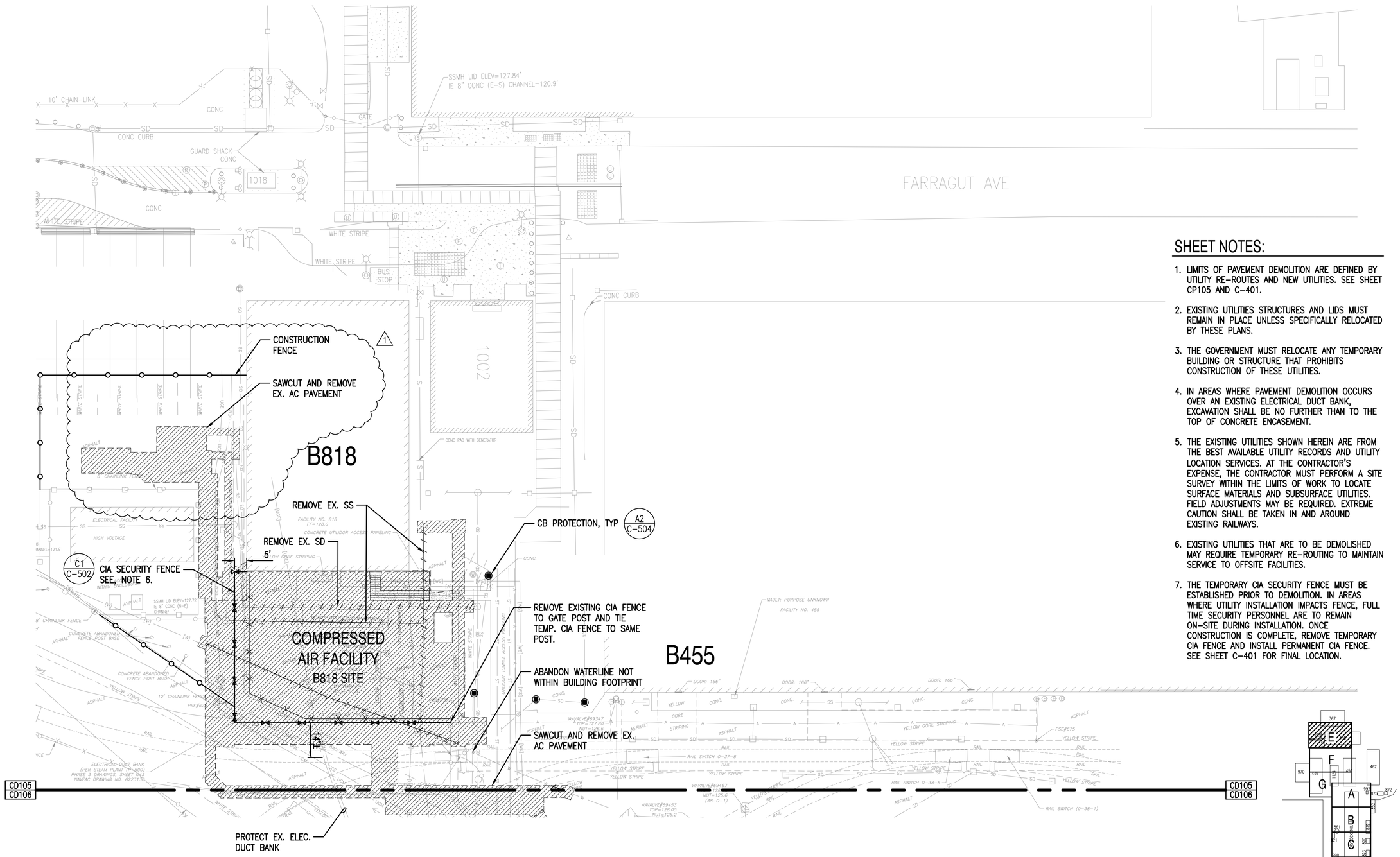

SHEET NOTES:

1. LIMITS OF PAVEMENT DEMOLITION ARE DEFINED BY UTILITY RE-ROUTES AND NEW UTILITIES. SEE SHEET CP105 AND C-401.
2. EXISTING UTILITIES STRUCTURES AND LIDS MUST REMAIN IN PLACE UNLESS SPECIFICALLY RELOCATED BY THESE PLANS.
3. THE GOVERNMENT MUST RELOCATE ANY TEMPORARY BUILDING OR STRUCTURE THAT PROHIBITS CONSTRUCTION OF THESE UTILITIES.
4. IN AREAS WHERE PAVEMENT DEMOLITION OCCURS OVER AN EXISTING ELECTRICAL DUCT BANK, EXCAVATION SHALL BE NO FURTHER THAN TO THE TOP OF CONCRETE ENCASEMENT.
5. THE EXISTING UTILITIES SHOWN HEREIN ARE FROM THE BEST AVAILABLE UTILITY RECORDS AND UTILITY LOCATION SERVICES. AT THE CONTRACTOR'S EXPENSE, THE CONTRACTOR MUST PERFORM A SITE SURVEY WITHIN THE LIMITS OF WORK TO LOCATE SURFACE MATERIALS AND SUBSURFACE UTILITIES. FIELD ADJUSTMENTS MAY BE REQUIRED. EXTREME CAUTION SHALL BE TAKEN IN AND AROUND EXISTING RAILWAYS.
6. EXISTING UTILITIES THAT ARE TO BE DEMOLISHED MAY REQUIRE TEMPORARY RE-ROUTING TO MAINTAIN SERVICE TO OFFSITE FACILITIES.
7. THE TEMPORARY CIA SECURITY FENCE MUST BE ESTABLISHED PRIOR TO DEMOLITION. IN AREAS WHERE UTILITY INSTALLATION IMPACTS FENCE, FULL TIME SECURITY PERSONNEL ARE TO REMAIN ON-SITE DURING INSTALLATION. ONCE CONSTRUCTION IS COMPLETE, REMOVE TEMPORARY CIA FENCE AND INSTALL PERMANENT CIA FENCE. SEE SHEET C-401 FOR FINAL LOCATION.

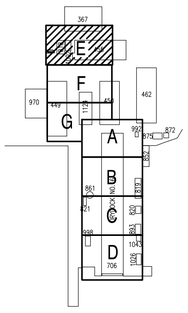

DEMOLITION PLAN-E

SCALE: 1"=20'

1" = 20'

0 20 40 60

HORIZONTAL SCALE IN FEET

KEY PLAN DD-6

SCALE: NONE

SYM	DESCRIPTION	DATE	APPR
1	AMENDMENT 003	04-26-16	SDM

NAVFAC

DAVID E. SCHWARTZ
STATE OF WASHINGTON
25448
REGISTERED PROFESSIONAL ENGINEER
3/2/16
SEAL

kpff
1601 5th Avenue, Suite 1600
Seattle, WA 98101
206.622.5822
www.kpff.com

A/E INFO

APPROVED

FOR COMMANDER NAVFAC

ACTIVITY

SATISFACTORY TO DATE

DES SDM | DRW AST | CHK DES

PM/DM: J. SHEPARD / L. ANDERSEN

BRANCH MANAGER: J. KISIDAY

CHIEF ENG/ARCH: B. GALLOWAY

FIRE PROTECTION: B. NIXON

DEPARTMENT OF THE NAVY
NAVAL FACILITIES ENGINEERING COMMAND
NAVAL FACILITIES ENGINEERING COMMAND ~ NORTHWEST
NAVAL STATION - SILVERDALE, WASHINGTON
IPT
NAVAL BASE KITSAP - PSNS & IMF
BREMERTON, WA

FY-16 MCON PROJECT P-431
DD-6 MODERNIZATION & UTILITY SITE IMPROVEMENTS

DEMOLITION PLAN-E

SCALE: 1" = 20'

EPROJECT NO.: 1355285

CONSTR. CONTR. NO.
N44255-XX-X-XXXX

NAVFAC DRAWING NO./PWD NO.
16034473/80727

SHEET 21 OF 248

CD105

DRAWFORM REVISION: 10 MARCH 2009

FILE NAME: Z:\115000-115400\115201 (nbk bremerton dd6)\CADD\Design\P431-DD06-DM101-7.dwg LAYOUT NAME: CD105 DEMO PLOTTED: Wednesday, March 02, 2016 - 11:27am USER: kurtp

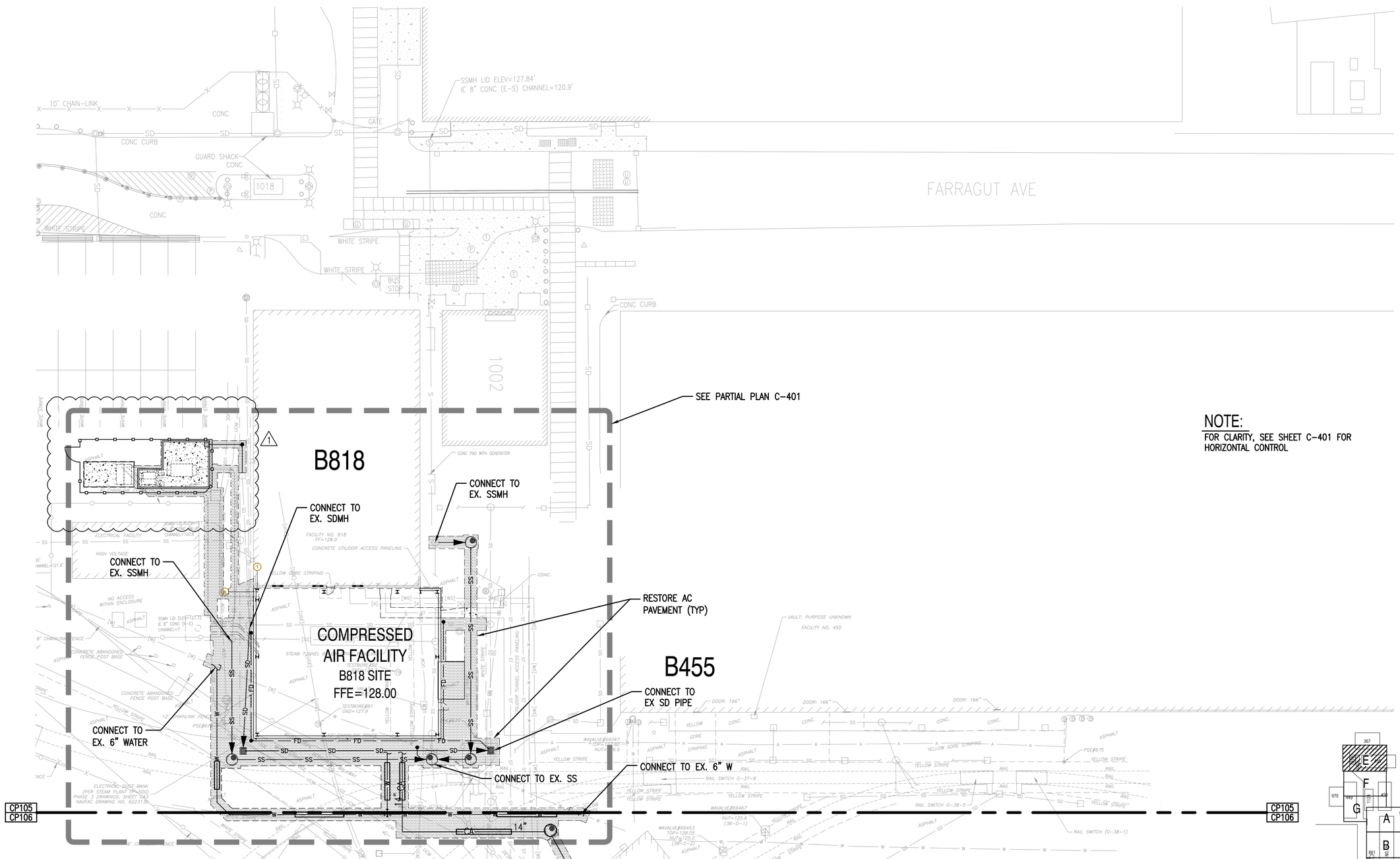

PAVING, UTILITY AND HORIZONTAL CONTROL PLAN-E

SCALE: 1"=20'

NOTE:
FOR CLARITY, SEE SHEET C-401 FOR HORIZONTAL CONTROL

1" = 20'
0 20 40 60
HORIZONTAL SCALE IN FEET

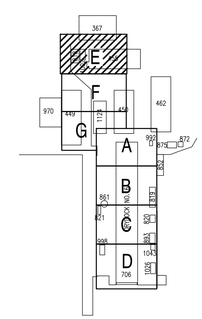

KEY PLAN DD-6
SCALE: NONE

STM	DESCRIPTION	DATE	APPR
1	AMENDMENT 003	04-26-16	SDM

NAVFAC

DAVID E. SCHWARTZ, STATE OF WASHINGTON, 25448, REGISTERED PROFESSIONAL ENGINEER, 3/2/16
SEAL

kpff
1601 5th Avenue, Suite 1600
Seattle, WA 98101
206.622.5822
www.kpff.com

A/E INFO

APPROVED
FOR COMMANDER NAVFAC
ACTIVITY
SATISFACTORY TO DATE

DES	DRW	CHK
SDM	AST	DES

PM/DM: J. SHEPARD / L. ANDERSEN
BRANCH MANAGER: J. KISIDAY
CHIEF ENG/ARCH: B. GALLOWAY
FIRE PROTECTION: B. NIXON

DEPARTMENT OF THE NAVY
NAVAL FACILITIES ENGINEERING COMMAND
NAVAL FACILITIES ENGINEERING COMMAND ~ NORTHWEST
NAVAL STATION - SILVERDALE, WASHINGTON
IPT
NAVAL BASE KITSAP – PSNS & IMF
BREMERTON, WA
FY-16 MCON PROJECT P-431
DD-6 MODERNIZATION & UTILITY SITE IMPROVEMENTS
PAVING, UTILITY AND HORIZONTAL CONTROL PLAN–E

SCALE: 1" = 20'
EPROJECT NO.: 1355285
CONSTR. CONTR. NO.: N44255–XX–X–XXXX
NAVFAC DRAWING NO./PWD NO.: 16034480/80734
SHEET 28 OF 248
CP105

DRAWFORM REVISION: 10 MARCH 2009

FILE NAME: Z:\115000-115400\115201 (nbk bremerton d46)\CADD\Design\P431-D006-CP101-8.dwg LAYOUT NAME: CP105 Paving PLOTTED: Wednesday, March 02, 2016 - 11:27am USER: kurtp

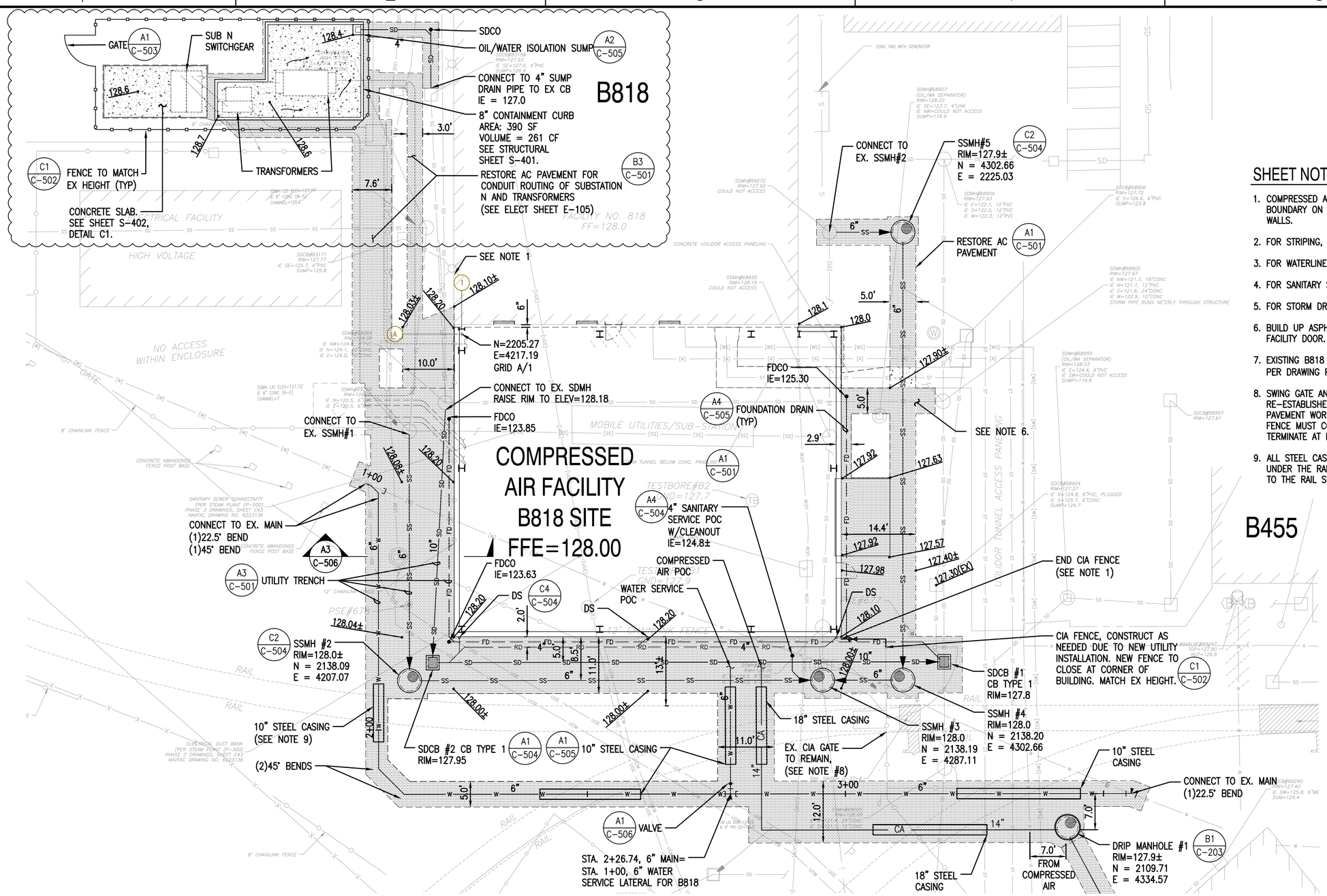

SHEET NOTES:

1. COMPRESSED AIR FACILITY BECOMES THE CIA BOUNDARY ON THE SOUTH AND WEST FACING WALLS.
2. FOR STRIPING, SEE CP108, DETAIL B1.
3. FOR WATERLINE PROFILES, SEE C-201.
4. FOR SANITARY SEWER PROFILES, SEE C-202.
5. FOR STORM DRAIN PROFILES, SEE C-204.
6. BUILD UP ASPHALT SECTION TO MEET FACILITY DOOR.
7. EXISTING B818 SLAB ELEVATION IS 128.0 PER DRAWING PW# 40138.
8. SWING GATE AND POSTS MUST BE RE-ESTABLISHED AFTER UTILITY AND PAVEMENT WORK IS COMPLETED. FINAL CIA FENCE MUST CONNECT TO GATE POST AND TERMINATE AT BUILDING CORNER.
9. ALL STEEL CASINGS SHOWN MUST BE JACKED UNDER THE RAILROAD RAILS. DISTURBANCE TO THE RAIL SUPPORT IS NOT PERMITTED.

PARTIAL PLAN COMPRESSED AIR FACILITY B818

SCALE: 1"=10'

CP105

1" = 10'

0 10 20 30

1 INCH = 10 FT. HORIZ.

STM	DESCRIPTION	DATE	APPR
1	AMENDMENT 003	04-26-16	SDM

NAVFAC

DAVID E. SCHWARTZ, STATE OF WASHINGTON, 25448, REGISTERED PROFESSIONAL ENGINEER, 5/2/16

SEAL

kpff — 1601 5th Avenue, Suite 1600, Seattle, WA 98101, 206.622.5822, www.kpff.com

A/E INFO.

APPROVED

FOR COMMANDER NAVFAC

ACTIVITY

SATISFACTORY TO DATE

DES SDM | DRW AST | CHK DES

PM/DM: J. SHEPARD / L. ANDERSEN

BRANCH MANAGER: J. KISIDAY

CHIEF ENG/ARCH: B. GALLOWAY

FIRE PROTECTION: B. NIXON

DEPARTMENT OF THE NAVY
NAVAL FACILITIES ENGINEERING COMMAND
NAVAL FACILITIES ENGINEERING COMMAND ~ NORTHWEST
NAVAL STATION - SILVERDALE, WASHINGTON
NAVAL BASE KITSAP – PSNS & IMF
BREMERTON, WA

FY-16 MCON PROJECT P-431
DD-6 MODERNIZATION & UTILITY SITE IMPROVEMENTS

PARTIAL PLAN COMPRESSED AIR FACILITY B818

SCALE: 1" = 10'

EPROJECT NO.: 1355285

CONSTR. CONTR. NO.: N44255-XX-X-XXXX

NAVFAC DRAWING NO./PWO NO.: 16034488/80742

SHEET 36 OF 248

C-401

DRAWFORM REVISION: 10 MARCH 2009

FILE NAME: Z:\115000-115499\115201 (nsk bremerton d46)\CADD\Design\P431-0006-C-401-001.dwg LAYOUT NAME: C-401 Details PLOTTED: Wednesday, March 02, 2016 - 11:26am USER: kurtp

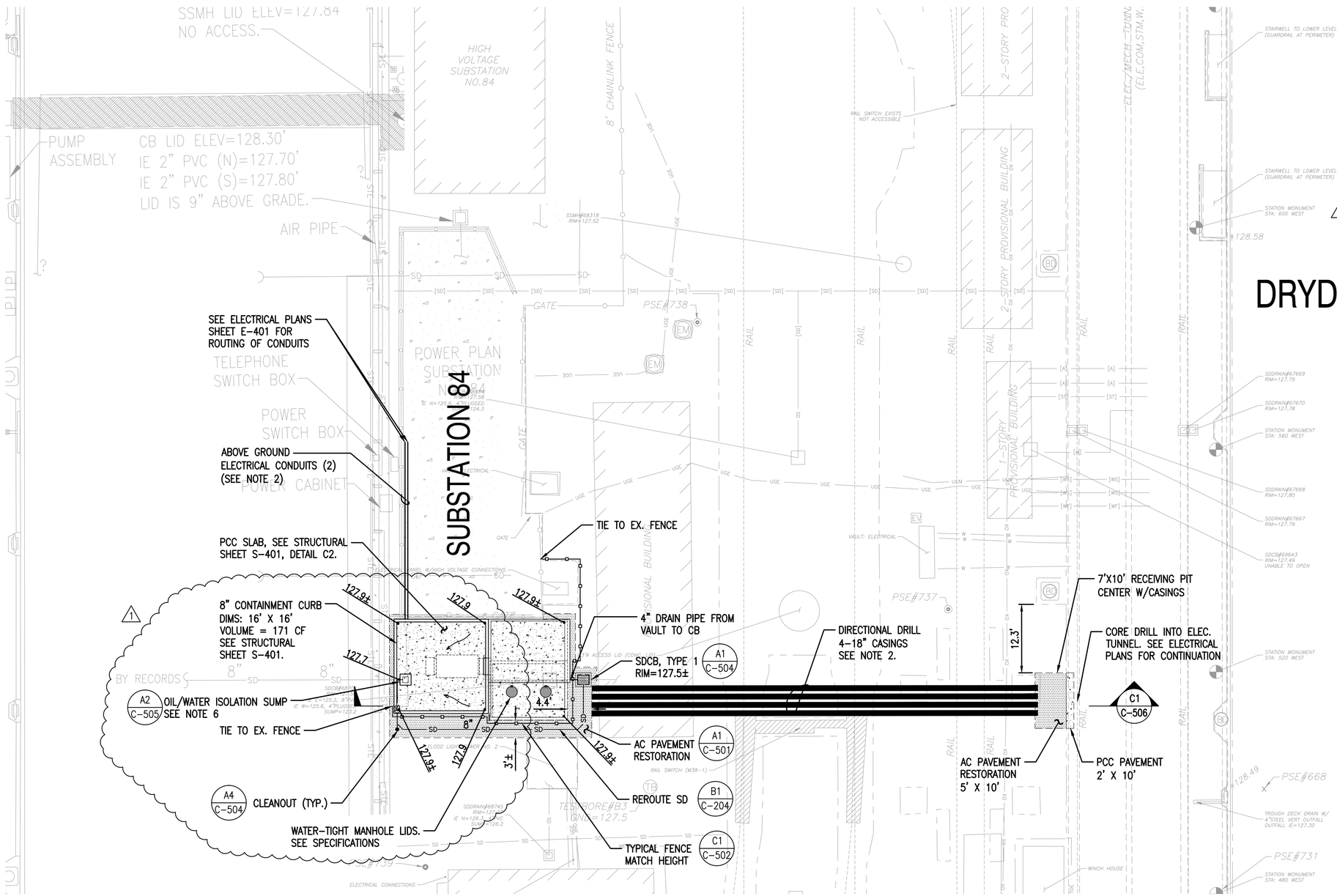

PARTIAL PLAN SUBSTATION 84A

SCALE: 1"=10'

CP103, CP108

1" = 10'

0 10 20 30

1 INCH = 10 FT. HORIZ.

SHEET NOTES:

1. FOR STRIPING, SEE CP108, DETAIL C3.
2. FOR CONDUIT SIZES, SEE ELECTRICAL PLANS SHEET E-401.
3. CONTRACTOR TO FIELD LOCATE EXISTING STORM DRAIN TO BE INTERCEPTED AND REROUTED PRIOR TO INSTALLING THE CATCH BASIN.
4. CONTRACTOR MUST BEGIN DIRECTIONAL DRILLING OPERATIONS FROM THE VAULT SIDE.
5. FOR HORIZONTAL CONTROL, SEE CP103.
6. FIELD CONNECT SUMP DRAIN AND SD REROUTE PIPE TO EXISTING SD PIPE WITH AN 8"x4"x8" TEE BETWEEN FENCE AND 10" CURB.

DRYDOCK 6

STM	DESCRIPTION	DATE	APPR
1	AMENDMENT 003	04-26-16	SDM

NAVFAC

DAVID E. SCHWARTZ, STATE OF WASHINGTON, 25449, REGISTERED PROFESSIONAL ENGINEER, 3/2/16

SEAL

kpff
1601 5th Avenue, Suite 1600
Seattle, WA 98101
206.622.5822
www.kpff.com

A/E INFO

APPROVED

FOR COMMANDER NAVFAC

ACTIVITY

SATISFACTORY TO DATE

DES SDM | DRW AST | CHK DES

PM/DM: J. SHEPARD / L. ANDERSEN

BRANCH MANAGER: J. KISIDAY

CHIEF ENG/ARCH: B. CALLOWAY

FIRE PROTECTION: B. NIXON

DEPARTMENT OF THE NAVY
NAVAL FACILITIES ENGINEERING COMMAND – NORTHWEST
NAVAL STATION – SILVERDALE, WASHINGTON
BREMERTON, WA

IPT NAVAL BASE KITSAP – PSNS & IMF

FY-16 MCON PROJECT P-431
DD-6 MODERNIZATION & UTILITY SITE IMPROVEMENTS

PARTIAL PLAN SUBSTATION 84A

SCALE: 1" = 10'

EPROJECT NO.: 1355285

CONSTR. CONTR. NO.
N44255-XX-X-XXXX

NAVFAC DRAWING NO./PWD NO.
16034489/80743

SHEET 37 OF 248

C-402

DRAWFORM REVISION: 10 MARCH 2009

FILE NAME: Z:\15000-115400\15201 (folk bremerton ddd6)\CADD\Design\P431-0006-C-401-01.dwg LAYOUT NAME: C-402 Details PLOTTED: Wednesday, March 02, 2016 - 11:26am USER: kurtp

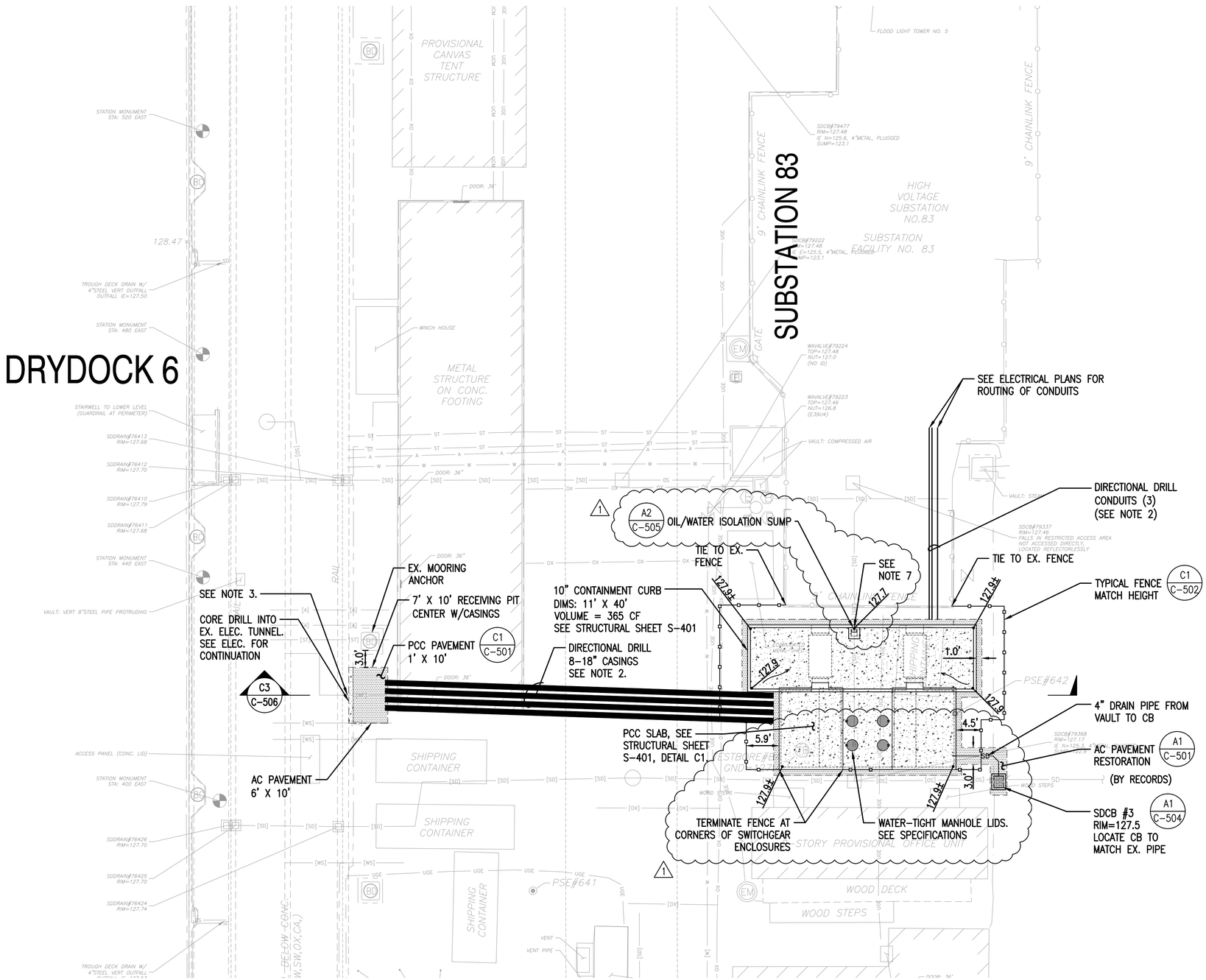

SHEET NOTES:

1. FOR STRIPING, SEE CP108, DETAIL A3.
2. FOR CONDUIT SIZES, SEE ELECTRICAL PLANS SHEET E-402.
3. EXISTING FRESH WATER SERVICE LINE MAY BE IMPACTED BY THE ELECTRICAL WORK. CONTRACTOR SHALL INCLUDE IN THEIR BID THE COST TO PERMANENTLY REROUTE THIS LINE.
4. CONTRACTOR TO FIELD LOCATE EXISTING STORM DRAIN TO BE INTERCEPTED PRIOR TO INSTALLING THE CATCH BASIN.
5. CONTRACTOR MUST BEGIN DIRECTIONAL DRILLING OPERATIONS FROM THE VAULT SIDE.
6. FOR HORIZONTAL CONTROL, SEE CP103.
7. REMOVE CAP AND CONNECT 4" SUMP DRAIN TO EXISTING 8" SD PIPE WITH A COUPLER. 1

PARTIAL PLAN SUBSTATION 83A AND 83B

SCALE: 1"=10'

CP103, CP108

1" = 10'

0 10 20 30

1 INCH = 10 FT. HORIZ.

STM	DESCRIPTION	DATE	APPR
1	AMENDMENT 003	04-26-16	SDM

NAVFAC

DAVID E. SCHWARTZ, STATE OF WASHINGTON, 25448, REGISTERED PROFESSIONAL ENGINEER, 3/2/16

SEAL

kpff 1601 5th Avenue, Suite 1600 Seattle, WA 98101 206.622.5822 www.kpff.com

A/E INFO

APPROVED

FOR COMMANDER NAVFAC

ACTIVITY

SATISFACTORY TO DATE

DES SDM DRW AST CHK DES

PM/DM: J. SHEPARD / L. ANDERSEN

BRANCH MANAGER: J. KISDAY

CHIEF ENG/ARCH: B. GALLOWAY

FIRE PROTECTION: B. NIXON

DEPARTMENT OF THE NAVY
NAVAL FACILITIES ENGINEERING COMMAND – NORTHWEST
NAVAL FACILITIES ENGINEERING COMMAND
NAVAL STATION – SILVERDALE, WASHINGTON
BREMERTON, WA
IPT
NAVAL BASE KITSAP – PSNS & IMF
FY-16 MCON PROJECT P-431
DD-6 MODERNIZATION & UTILITY SITE IMPROVEMENTS
PARTIAL PLAN SUBSTATION 83A AND 83B

SCALE: 1" = 10'

EPROJECT NO.: 1355285

CONSTR. CONTR. NO. N44255-XX-X-XXXX

NAVFAC DRAWING NO./PWD NO. 16034490/80744

SHEET 38 OF 248

C-403

DRAWFORM REVISION: 10 MARCH 2009

FILE NAME: Z:\15000-115400\15201 (folk bremerton dd6)\CADD\Design\P431-D006-C-401-D1.dwg LAYOUT NAME: C-403 Details PLOTTED: Wednesday, March 02, 2016 - 11:26am USER: kurtp

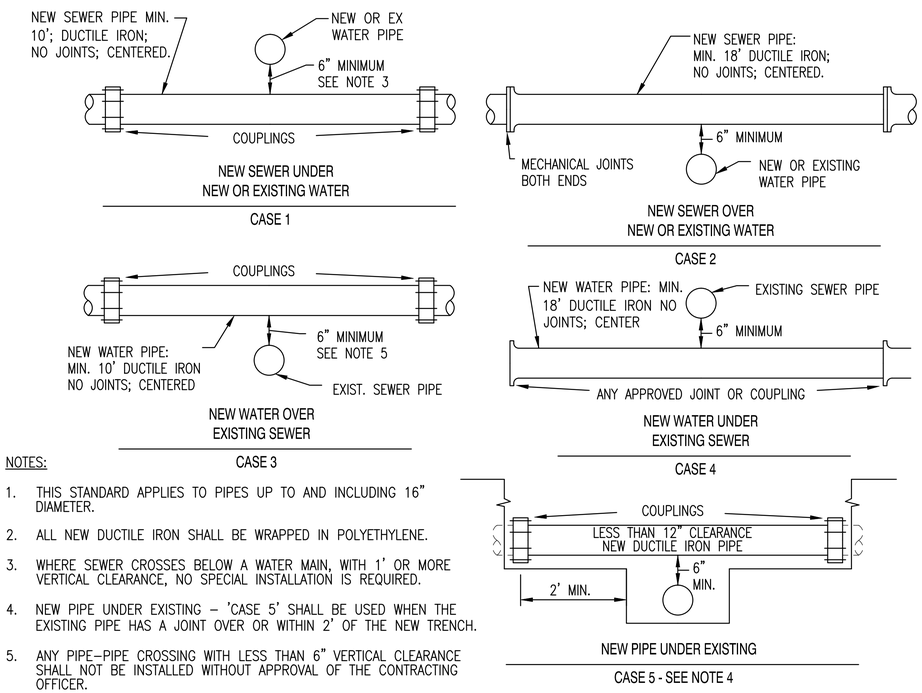

NOTES:

1. THIS STANDARD APPLIES TO PIPES UP TO AND INCLUDING 16" DIAMETER.
2. ALL NEW DUCTILE IRON SHALL BE WRAPPED IN POLYETHYLENE.
3. WHERE SEWER CROSSES BELOW A WATER MAIN, WITH 1' OR MORE VERTICAL CLEARANCE, NO SPECIAL INSTALLATION IS REQUIRED.
4. NEW PIPE UNDER EXISTING – 'CASE 5' SHALL BE USED WHEN THE EXISTING PIPE HAS A JOINT OVER OR WITHIN 2' OF THE NEW TRENCH.
5. ANY PIPE–PIPE CROSSING WITH LESS THAN 6" VERTICAL CLEARANCE SHALL NOT BE INSTALLED WITHOUT APPROVAL OF THE CONTRACTING OFFICER.

STANDARD PIPE CROSSING DETAIL (B1)

SCALE: NTS — WHERE REQUIRED

THRUST BLOCK AREA IN SQUARE FEET

SOIL	FIRM SILT OR FIRM SILTY SAND				COMPACT SAND				COMPACT SAND & GRAVEL			
FITTING	90° BEND	TEE	45° BEND CAP OR PLUG	11¼° & 22½° BEND	90° BEND	TEE	45° BEND CAP OR PLUG	11¼° & 22½° BEND	90° BEND	TEE	45° BEND CAP OR PLUG	11¼° & 22½° BEND
6"	13.3	9.4	3.8	6.7	4.7	4.7	4.7	1.9	5.0	3.5	3.5	1.4

AREAS CALCULATED ON 300 PSI TEST PRESSURE AND 3'-0" MIN. COVER OVER WATERMAIN

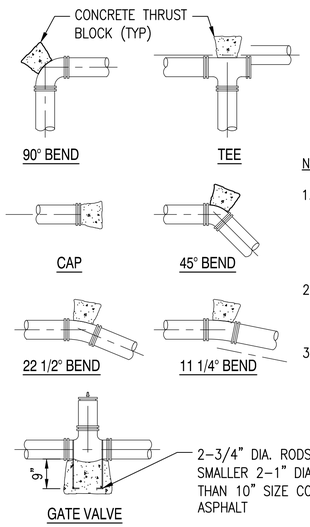

NOTES

1. THRUST BLOCKS SHALL BE CAST IN PLACE CEMENT CONCRETE WITH MINIMUM 28–DAY COMPRESSIVE STRENGTH OF 3000 PSI.
2. THRUST BLOCKS SHALL BEAR AGAINST FITTINGS ONLY AND BE CLEAR OF JOINTS.
3. THRUST BLOCKING AT WATER LINE FITTINGS NOT REQUIRED IF RESTRAINED JOINTS ARE USED.

HORIZONTAL THRUST BLOCK DETAIL (B3)

SCALE: NTS — WHERE REQUIRED

TYPE "A" BLOCKING
FOR 11 1/4°–22 1/2° VERTICAL BENDS

PIPE SIZE NOMINAL DIAMETER– INCHES	TEST PRESSURE PSI	VB: VERTICAL BEND DEGREES	VB: No. OF CU. FT. OF CONC. BLOCKING	S: SIDE OF CUBE LIN. FT.	D: DIAM. OF SHACKLE RODS (2) INCHES	L: DEPTH OF RODS IN CONCRETE LIN. FT.
6"	300	11 1/4	11	2.2	5/8"	2.0
		22 1/2	25	2.9		
6"	300	11 1/4	16	2.5	5/8"	2.0
		22 1/2	47	3.6		

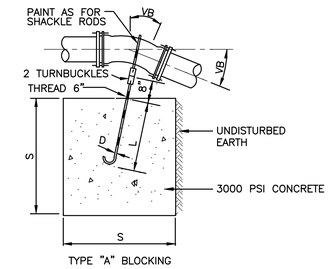

TYPE "B" BLOCKING
FOR – 45° VERTICAL BENDS

		VB		S	D	L
6"	300	45	30	3.1	5/8"	2.0

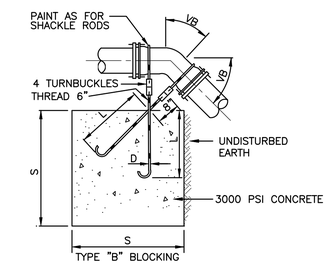

VERTICAL THRUST BLOCK & ANCHOR BLOCK DETAIL (B4)

SCALE: NTS — WHERE REQUIRED

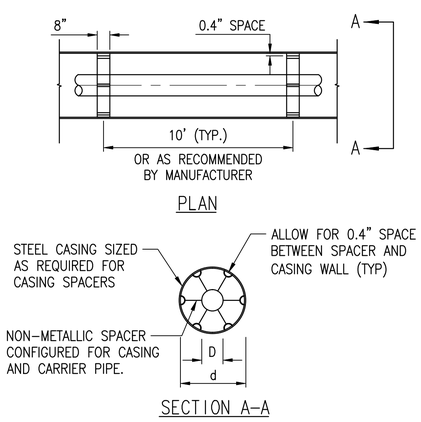

UTILITY PIPE SIZE (D) (IN.)	SLEEVE PIPE SIZE (d) (IN.)
4	8
6	10
10	14
14	16

STEEL CASING DETAIL (A1)

SCALE: NTS — C–401

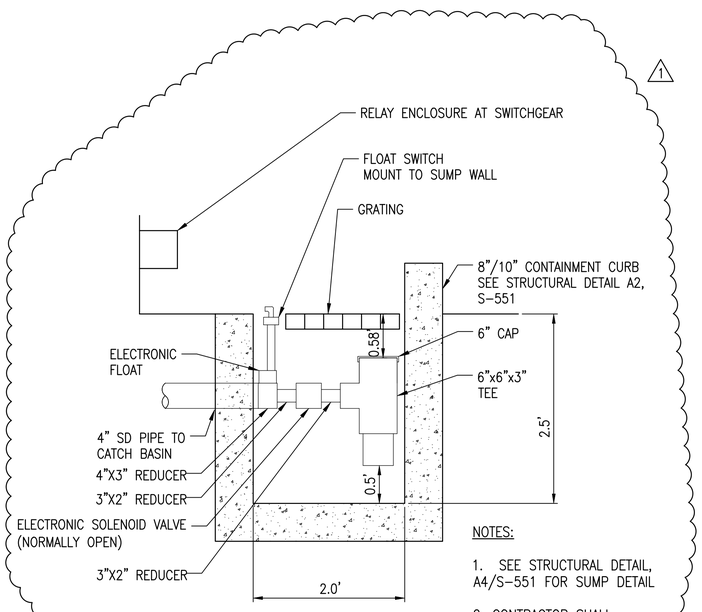

NOTES:

1. SEE STRUCTURAL DETAIL, A4/S–551 FOR SUMP DETAIL
2. CONTRACTOR SHALL CONNECT RELAY TO FLOAT AND SOLENOID SYSTEM.

OIL / WATER ISOLATION SUMP (A2)

SCALE: NTS — C–401, C–402, C–403

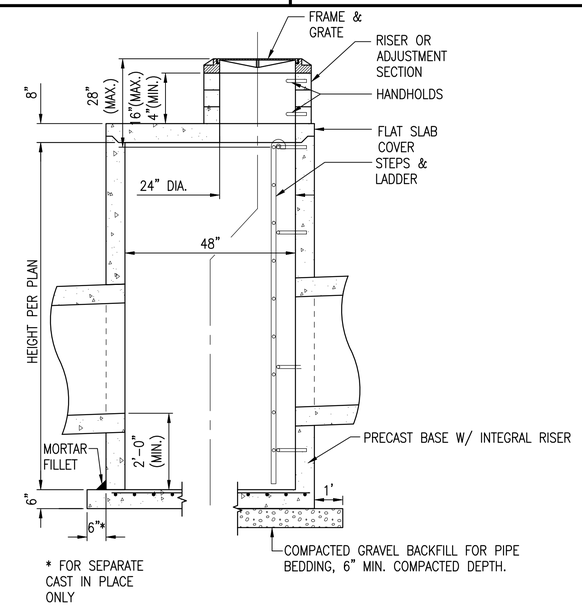

CATCH BASIN TYPE 2 (A3)

SCALE: NTS — C–203

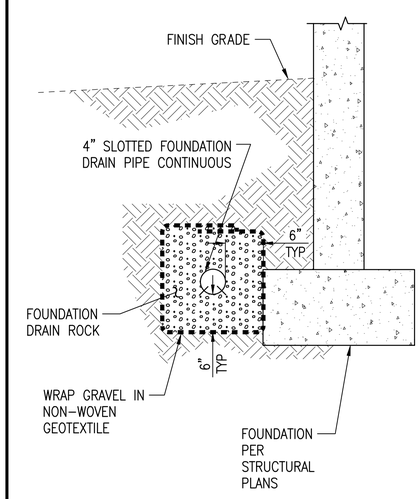

FOUNDATION DRAIN DETAIL (A4)

SCALE: NTS — C–401

DATE	APPR	DESCRIPTION
04-26-16	SDM	AMENDMENT 003

NAVFAC

DAVID E. SCHWARTZ, STATE OF WASHINGTON, 25448, REGISTERED PROFESSIONAL ENGINEER, 3/2/16

kpff — 1601 5th Avenue, Suite 1600, Seattle, WA 98101, 206.622.5822, www.kpff.com

A/E INFO

APPROVED

FOR COMMANDER NAVFAC

ACTIVITY

SATISFACTORY TO DATE

DES SDM | DRW AST | CHK DES

PM/DM: J. SHEPARD / L. ANDERSEN

BRANCH MANAGER: J. KISIDAY

CHIEF ENG/ARCH: B. GALLOWAY

FIRE PROTECTION: B. NIXON

DEPARTMENT OF THE NAVY
NAVAL FACILITIES ENGINEERING COMMAND
NAVAL FACILITIES ENGINEERING COMMAND – NORTHWEST
NAVAL STATION – SILVERDALE, WASHINGTON
NAVAL BASE KITSAP – PSNS & IMF
BREMERTON, WA

FY-16 MCON PROJECT P-431
DD-6 MODERNIZATION & UTILITY SITE IMPROVEMENTS

DETAILS

SCALE: –

EPROJECT NO.: 1355285

CONSTR. CONTR. NO. N44255–XX–X–XXXX

NAVFAC DRAWING NO./PWO NO. 16034495/80749

SHEET 43 OF 248

C-505

DRAWFORM REVISION: 10 MARCH 2009

FILE NAME: Z:\115000–115499\115201 (cbk bremerton ddd)\CAD\Design\P431-DD06-C-501-DT.dwg LAYOUT NAME: C-505 Details PLOTTED: Wednesday, March 02, 2016 – 11:26am USER: kurtp

STRUCTURAL NOTES

CONCRETE

△1

EXISTING MATERIALS: BASED ON DRAWING PW 40013, THE FOLLOWING MATERIAL PROPERTIES HAVE BEEN ASSUMED FOR THE EXISTING DRYDOCK CONSTRUCTION:

CAST-IN-PLACE CONCRETE	F'c = 3,500 PSI
REINFORCING STEEL	Fy = 40,000 PSI

CONCRETE MIXES: CONCRETE MIXES SHALL CONFORM TO THE PROJECT SPECIFICATIONS AND THE FOLLOWING REQUIREMENTS:

F'C (PSI)	TEST AGE (DAYS)	USE
3,000	28	FOUNDATIONS, SLAB-ON-DECK, CURBS AND PADS
4,000	28	SLAB-ON-DECK, WALLS, MISCELLANEOUS

WATER-REDUCING ADMIXTURES MAY BE INCORPORATED IN CONCRETE MIX DESIGNS, BUT SHALL CONFORM TO ASTM C 494, AND BE USED IN STRICT ACCORDANCE WITH THE MANUFACTURER'S RECOMMENDATIONS. $CaCl_2$ OR OTHER WATER-SOLUBLE CHLORIDE ADMIXTURES SHALL NOT BE USED.

FIELD-MEASURED SLUMP SHALL CONFORM TO THE SUBMITTED CONCRETE MIX DESIGN. TOLERANCE OF SLUMP SHALL CONFORM TO ASTM C 94.

AN AIR-ENTRAINING AGENT CONFORMING TO ASTM C 260 SHALL BE USED IN ALL CONCRETE MIXES FOR FLATWORK WHICH IS EXPOSED TO WEATHER. THE AMOUNT OF ENTRAINED AIR SHALL BE 5 PERCENT ±1 1/2 PERCENT BY VOLUME. THE AMOUNT OF ENTRAINED AIR SHALL BE MEASURED IN THE FIELD AT THE DISCHARGE FROM THE TRUCK.

THE CONTRACTOR SHALL SUBMIT CONCRETE MIX DESIGNS FOR APPROVAL 2 WEEKS PRIOR TO PLACING ANY CONCRETE. THE MIX DESIGN SHALL BE IN CONFORMANCE WITH ACI 318, CHAPTER 5. THE SUBMITTAL SHALL INDICATE WHERE EACH CONCRETE MIX IS TO BE USED ON THE PROJECT, AS WELL AS THE MAXIMUM AGGREGATE SIZE OF EACH MIX. MAXIMUM AGGREGATE SIZE SHALL CONFORM TO THE PROJECT SPECIFICATIONS.

CURING: IF THE AIR TEMPERATURE WILL EXCEED 75 DEGREES F WITHIN 48 HOURS OF PLACING CONCRETE, A MOIST CURE SHALL BE APPLIED TO THE CONCRETE FOR A PERIOD OF 36 HOURS AFTER FINISHING CONCRETE SURFACES. REFER TO THE PROJECT SPECIFICATIONS FOR CURING REQUIREMENTS.

REINFORCING STEEL

DEFORMED BARS	ASTM A 615, GRADE 60
ADHESIVE DOWELS:	PROVIDE ADHESIVE AS LISTED FOR "POST-INSTALLED ANCHORS" THIS SHEET.

REINFORCING SHALL BE SUPPORTED AS SPECIFIED BY THE PROJECT SPECIFICATIONS AND THE CRSI MANUAL OF STANDARD PRACTICE. REINFORCING STEEL SHALL BE DETAILED IN ACCORDANCE WITH ACI STANDARD OF PRACTICE AS OUTLINED IN "DETAILS AND DETAILING OF CONCRETE REINFORCEMENT, ACI 315."

LAP ALL REINFORCING BARS AS NOTED ON THE DRAWINGS. WHERE SPLICE LENGTH IS NOT SHOWN, USE TYPE Lb (Lbt FOR TOP BARS) SPLICE PER DEVELOPMENT AND SPLICE LENGTH SCHEDULE. MECHANICAL OR WELDED BUTT SPLICES SHALL BE USED SUBJECT TO CONTRACTING OFFICER'S APPROVAL. MECHANICAL SPLICES CALLED OUT ON THE PLANS SHALL BE TYPE 1, UNLESS OTHERWISE NOTED. TYPE 1 SPLICES SHALL DEVELOP 125 PERCENT OF THE YIELD CAPACITY OF THE SPLICED BARS IN BOTH TENSION AND COMPRESSION. TYPE 2 SPLICES SHALL DEVELOP THE SPECIFIED TENSILE STRENGTH OF THE SPLICED BARS IN TENSION IN ADDITION TO MEETING TYPE 1 SPLICE REQUIREMENTS.

REINFORCING STEEL SHALL HAVE PROTECTION AS FOLLOWS, UNLESS NOTED OTHERWISE:

USE		COVER	
BEAM STIRRUPS AND PILASTER TIES		1 1/2"	
NONSTRUCTURAL SLAB-ON-GRADE		MID-DEPTH	
WALL BARS:	INTERIOR FACES	3/4"	
	EXPOSED TO EARTH OR WEATHER	1 1/2"	(#5 AND SMALLER)
		2"	(#6 AND LARGER)
FOOTING, GRADE BEAM	BOTTOM BARS	3"	(CAST AGAINST EARTH)
	TOP BARS	1 1/2"	
		2"	(#6 AND LARGER WHERE EXPOSED TO EARTH OR WEATHER)
	SIDE BARS	2"	

NONSHRINK GROUT: BASE PLATE GROUT SHALL BE NONSHRINK TYPE WITH MINIMUM F'C = 8,000 PSI. ALL OTHER NONSHRINK GROUT SHALL HAVE MINIMUM F'C = 5,000 PSI.

CONCRETE SURFACE PREPARATION

A. THESE NOTES APPLY TO NEW CONCRETE THAT IS TO BE PLACED IN CONTACT WITH EXISTING CONCRETE WHERE THE SURFACE IS NOT REQUIRED TO BE INTENTIONALLY ROUGHENED.
B. REMOVE 1/8" OF THE EXISTING CONCRETE SURFACE WITH A NEEDLE SCALER. NEEDLE SCALER WEIGHT NOT TO EXCEED 10 POUNDS.
C. CLEAN AND PREPARE CONCRETE SURFACE PRIOR TO CONCRETE PLACEMENT IN ACCORDANCE WITH THE SPECIFICATIONS.

CONCRETE REMOVAL AND REPLACEMENT

A. THESE NOTES APPLY WHERE EXISTING CONCRETE IS TO BE REMOVED AND REPLACED.
B. EDGES OF THE CONCERETE REMOVAL AREA SHALL BE SAW CUT PERPENDICUALR TO THE CONCRETE SURFACE FOR A MINIMUM DEPTH OF AT LEAST 3/4 INCH. DO NOT SAW CUT THROUGH EXISTING REINFORCING BARS. PROTECT THE SAW CUT EDGE FROM ALL SUBSEQUENT OPERATIONS.
C. REMOVE CONCRETE TO PROFILE INDICATED. CHIPPING HAMMER WEIGHT NOT TO EXCEED 25 POUNDS.
D. DO NOT CUT OR DAMAGE EXISTING REINFORCING UNLESS SHOWN IN THESE DRAWINGS. CONTACT THE CONTRACTING OFFICER FOR DIRECTION IF REMOVAL OF REINFORCING NOT INDICATED ON THESE DRAWINGS IS REQUIRED.
E. ANY REINFORCING BARS EXPOSED DURING DEMOLITION SHALL HAVE THE SURROUNDING CONCRETE REMOVED TO PROVIDE NOT LESS THAN 3/4" CLEAR AROUND ALL EXPOSED REINFORCING BAR.
F. ALL EXPOSED REINFORCING BARS SHALL BE CLEANED OF ALL SCALE, LOOSE CORROSION, DIRT, OIL OR ANY OTHER DELETERIOUS MATERIAL BY HAND TOOLS OR WIRE BRUSH. COAT PRIOR TO CONCRETE PLACEMENT WITH A CORROSION INHIBITING PRIMER.
G. CONCRETE SURFACES SHALL HAVE A 1/4" MIN AMPLITUDE. INTENTIONALLY ROUGHEN SURFACE WITH CHIPPING HAMMER AS REQUIRED TO ACHIEVE THIS PROFILE.
H. CLEAN AND PREPARE CONCRETE SURFACE PRIOR TO CONCRETE PLACEMENT IN ACCORDANCE WITH THE SPECIFICATIONS.

CORE DRILLING

A. VERIFY CORE DRILL SIZE AND COORDINATE LOCATION SHOWN ON THESE DRAWINGS WITH TRADES RESPONSIBLE FOR PIPING OR CONDUIT THAT WILL OCCUPY THE HOLE.
B. WHERE INDICATED ON THE DRAWINGS, LOCATE REINFORCING PRIOR TO CORE DRILLING WITH GROUND PENETRATING RADAR AND ADJUST CORE DRILL LOCATION AS REQUIRED TO MISS REINFORCING. VERIFY RESULTING CORE DRILL LOCATION WITH TRADES RESPONSIBLE FOR PIPING OR CONDUIT THAT WILL OCCUPY THE HOLE.
C. SECURE CORE DRILLING APPARATUS AS REQUIRED. DO NOT CUT REINFORCING TO INSTALL ANY REQUIRED ANCHORAGE DEVICES. AFTER COMPLETION OF CORE DRILLING REMOVE ANY ANCHORAGE DEVICES USED AND FILL THE RESULTING HOLES WITH NON-SHRINK GROUT PER THE SPECIFICATIONS.
D. CORE DRILL HOLE THROUGH THE FULL THICKNESS OF THE CONCRETE ELEMENT. CORE DRILL LENGTHS SHOWN ON THE CORE DRILL SCHEDULE ARE BASED ON THE EXISTING DRAWINGS. FOR BIDDING, ASSUME CORE DRILL LENGTHS MAY BE UP TO 6" GREATER THAN OR 6" LESS THAN THE SCHEDULED LENGTH.
E. SUBMIT CORE DRILLING REPORT TO CONTRACTING OFFICER. REPORT SHALL BE COMPLETED BEFORE FABRICATION OF COMPONENTS THAT WILL BE PLACED IN THE HOLE AND SHALL RECORD SIZE, DEPTH, AND ORIENTATION OF ANY REINFORCING ENCOUNTERED

STRUCTURAL STEEL

REFERENCE SPECIFICATIONS

STRUCTURAL STEEL	AISC 360 – SPECIFICATION FOR STRUCTURAL STEEL BUILDINGS
HIGH STRENGTH BOLTS	RCSC SPECIFICATION FOR STRUCTURAL JOINTS USING HIGH-STRENGTH BOLTS
WELDING	AWS D1.1 , TYPICAL AWS D1.3 FOR METAL DECK AND COLD-FORMED FRAMING AWS D1.8 FOR SUPPLEMENTAL SEISMIC PROVISIONS AWS PREQUALIFIED JOINT DETAILS
WELDER CERTIFICATION	AMERICAN WELDING SOCIETY (AWS) WASHINGTON ASSOCIATION OF BUILDING OFFICIALS (WABO)
STEEL DECKING	STEEL DECK INSTITUTE PUBLICATION NO. 31 AISI S100 – NORTH AMERICAN SPECIFICATION FOR THE DESIGN OF COLD-FORMED STEEL STRUCTURAL MEMBERS

CARBON STEEL MATERIALS

WIDE FLANGE SHAPES	ASTM A 992
CONNECTION MATERIAL, EMBEDDED ITEMS, CHANNELS, ANGLES, BASE PLATES, AND MISC. STEEL	ASTM A 36, UNLESS NOTED OTHERWISE
STRUCTURAL TUBES	ASTM A 500, GRADE C
STEEL PIPE	ASTM A 53, GRADE B
BOLTS	ASTM A 307
ANCHOR RODS	ASTM F 1554, GRADE 36
THREADED RODS	ASTM A 36
WELDING ELECTRODES	70 KSI, LOW HYDROGEN, TYPICAL

STRUCTURAL STEEL DESIGN, FABRICATION AND ERECTION SHALL CONFORM TO THE REQUIREMENTS OF IBC CHAPTER 22. ALL MEMBERS ARE TO BE ERECTED WITH NATURAL MILL CAMBER OR INDUCED CAMBER UP, UNLESS OTHERWISE NOTED ON THE PLANS. SUBSTITUTION OF MEMBER SIZES OR STEEL GRADE WILL NOT BE ALLOWED WITHOUT PRIOR APPROVAL OF THE ARCHITECT. BOLTED CONNECTIONS ARE TO BE OF HIGH STRENGTH ASTM *A 325* OR *A 490* BOLTS AS SHOWN, UNLESS NOTED OTHERWISE. A MINIMUM OF TWO BOLTS IS REQUIRED FOR ALL BEAM CONNECTIONS. ALTERNATIVE CONNECTIONS TO THOSE SHOWN ON THESE DRAWINGS WILL REQUIRE PRIOR APPROVAL OF THE ARCHITECT.

BEAM CAMBER INDICATED ON DRAWINGS IS THE UPWARD CAMBER REQUIRED IN THE BEAM AS DELIVERED TO THE JOB SITE. CONTRACTOR TO CONSIDER CAMBER LOSS, IF ANY, DUE TO SHIPPING AND HANDLING.

THE CONTRACTOR SHALL BE RESPONSIBLE FOR ALL ERECTION AIDS AND JOINT PREPARATIONS THAT INCLUDE, BUT ARE NOT LIMITED TO, ERECTION ANGLES, LIFT HOLES AND OTHER AIDS, WELDING PROCEDURES, REQUIRED ROOT OPENINGS, ROOT FACE DIMENSIONS, GROOVE ANGLES, BACKING BARS, COPES, SURFACE ROUGHNESS VALUES, AND UNEQUAL PARTS.

GALVANIZING: STRUCTURAL STEEL IN THE COMPRESSOR BUILDING SHALL BE SHOP PAINTED IN ACCORDANCE WITH THE SPECIFICATIONS ALL OTHER CARBON STEEL AND CONNECTIONS SHALL BE HOT-DIPPED GALVANIZED AFTER FABRICATION IN COMPLIANCE WITH ASTM A 123. ALL FIELD WELDS ON GALVANIZED MATERIAL SHALL BE PROTECTED WITH GALVANIZING REPAIR MATERIALS IN ACCORDANCE WITH THE SPECIFICATIONS.

WELDING: ALL WELDING SHALL BE IN CONFORMANCE WITH AISC AND AWS STANDARDS. REMOVE GALVANIZING PRIOR TO WELDING. WELDING OF CARBON STEEL SHALL BE PERFORMED BY AWS-CERTIFIED OR WABO-CERTIFIED WELDERS USING ELECTRODES SPECIFIED ABOVE AND LOW HYDROGEN PROCESSES. STAINLESS STEEL WELDING SHALL BE PERFORMED BY AWS CERTIFIED WELDERS USING ELECTRODES SPECIFIED ABOVE AND LOW HYRDOGEN PROCESSES. ONLY WELDS THAT ARE PREQUALIFIED, AS DEFINED BY AWS, OR QUALIFIED BY TESTING SHALL BE USED. WELDS SHOWN ON THE DRAWINGS ARE MINIMUM SIZES. INCREASE WELD SIZE TO AWS MINIMUM SIZES BASED ON THICKNESS. MINIMUM WELD SIZE SHALL BE 3/16-INCH, UNLESS NOTED OTHERWISE. THE WELDS SHOWN ARE FOR THE FINAL CONNECTIONS.

WELDING OF THE SEISMIC FORCE RESISTING SYSTEM SHALL BE EXECUED IN ACCORDANCE WITH THE PROVISIONS OF AWS D1.8 "STRUCTRUAL WELDING CODE – SEISMIC SUPPLEMENT". WELDS ASSOCIATED WITH THE SEISMIC FORCE RESISTING SYSTEM ARE IDENTIFIED WITHIN THESE DRAWINGS AS FOLLOWS:

D1.8	INDICATES WELDS SUBJECT TO THE REQUIREMENTS OF D1.8
D1.8-DCW	INDICATES WELDS SUBJECT TO ADDITIONAL SPECIFIC REQUIREMENTS WITHIN D1.8

METAL BAR GRATING: FABRICATE STEEL GRATING IN ACCORDANCE WITH NATIONAL ASSOCIATION OF ARCHITECTURAL METAL MANUFACTURERS (NAAMM) MBG 531 METAL BAR GRATING MANUAL." METAL BAR GRATING SHALL BE WELDED STEEL GRATING, UNLESS NOTED OTHERWISE. HOT DIP GALVANIZE GRATING AFTER FABRICATION PER ASTM A123.

METAL DECK

STEEL DECK SHALL CONFORM TO ASTM A 653, GRADE 33, MINIMUM. MINIMUM FY = 38,000 PSI. WHERE THE DECK IS LEFT PERMANENTLY EXPOSED, GALVANIZED COATING SHALL CONFORM TO ASTM A 924, G90. IN OTHER AREAS, GALVANIZED COATING SHALL CONFORM TO ASTM A 924, G60.

MINIMUM DECK GAGES ARE SHOWN ON PLANS AND ARE BASED ON 3-SPAN, UNSHORED CONDITIONS. HEAVIER DECK GAGES MAY BE REQUIRED FOR CONDITIONS OTHER THAN THESE, DEPENDING ON MANUFACTURER'S AND CONTRACTOR'S LAYOUT. DECK SUPPLIER SHALL VERIFY DECK GAGES AND CAPACITIES BASED ON ACTUAL DECK LAYOUT AND SPAN CONDITIONS. DEVIATIONS IN DECK GAGES FROM THOSE SHOWN SHALL BE SUBMITTED TO THE ARCHITECT, ALONG WITH A VALID ICC REPORT FOR APPROVAL PRIOR TO SHOP DETAILING.

DECK WELDING SHALL BE IN ACCORDANCE WITH AWS D1.3, "STRUCTURAL WELDING CODE – SHEET STEEL." WELDERS SHALL BE QUALIFIED BY WABO SHEET STEEL WELDER CERTIFICATION PROGRAM. ARC SPOT WELD SIZES NOTED ARE BASED ON THE NOMINAL (VISIBLE) DIAMETER.

CONTRACTOR SHALL PROVIDE CLOSURE PLATES, FLASHING, AND ALL MISCELLANEOUS LIGHT GAGE METAL SHAPES NECESSARY TO COMPLETE THE WORK. THE MINIMUM BEARING SHALL BE 2 INCHES.

COMPOSITE FLOOR/ROOF SLAB DECK: STEEL FLOOR DECK SHALL BE A COMPOSITE TYPE DECK WITH RIBS AT 12 INCHES ON CENTER OF THE SIZE AND GAGE SHOWN ON THE PLANS AND DETAILS, OR AN APPROVED EQUAL.

FLOOR DECK FASTENING SHALL BE AS FOLLOWS, UNLESS NOTED OTHERWISE, AND EXCEPT AS INDICATED IN TYPICAL COMPOSITE BEAM DETAILS.

MIN 5/8-INCH DIAMETER ARC-SPOT WELDS AT 12 INCHES ON CENTER AT TRANSVERSE AND PERIMETER SUPPORTS

MIN 5/8-INCH DIAMETER ARC-SPOT WELDS AT 18 INCHES ON CENTER AT LONGITUDINAL SUPPORTS

BUTTON PUNCH OR 1 1/2-INCH TOP OR SIDE SEAM WELD AT 18 INCHES ON CENTER AT SIDE LAP CONNECTIONS

ANCHORS

POST-INSTALLED ANCHORS: WHERE MECHANICAL ANCHORS ARE SPECIFIED, PROVIDE A PRODUCT WITH AN ICC-ESR VALID FOR THE 2012 IBC FOR USE IN RESISTING SEISMIC LOADS IN CRACKED CONCRETE.

WHERE ADHESIVE ANCHORS ARE SPECIFIED, PROVIDE A PRODUCT WITH AN ICC-ESR VALID FOR THE 2012 IBC FOR USE IN RESISTING SEISMIC LOADS IN CRACKED CONCRETE.

ANCHORS SHALL BE HOT DIP GALVANIZED UNLESS NOTED OTHERWISE.

DO NOT CUT EXISTING REINFORCING STEEL DURING ANCHOR INSTALLATION. SEE "FIELD INSTALLATION NOTES" ON DETAILS FOR ADJUSTMENT OF ANCHOR LOCATIONS TO ACCOMMODATE EXISTING REINFORCING STEEL.

HEADED SHEAR STUDS: ALL HEADED SHEAR STUDS SHALL CONFORM TO ASTM A 108 AND SHALL BE 3/4-INCH DIAMETER HEADED STUDS, UNLESS NOTED OTHERWISE. STUD LENGTHS AFTER WELD SHALL BE AS SHOWN ON THE DRAWINGS.

TIDAL INFORMATION

TIDAL INFORMATION:

	PSNS REF: DATUM	REF: MLLW
TOP OF CONCRETE FOR DRYDOCK	128.7*	19.3
EXTREME HIGH WATER (EHW)	124.8	15.4
MEAN HIGHER HIGH WATER (MHHW)	121.1	11.7
MEAN LOWER LOW WATER (MLLW)	109.4	0.0
EXTREME LOW WATER (ELW)	105.0	-4.4

* ELEVATION BASED ON PSNS REFERENCE DATUM SHOWN ON PUBLIC WORKS REFERENCE DRAWINGS.

OTHER TIDAL INFORMATION BASED ON NOAA/NAS, TIDAL EPOCH 1983-2001, IN FEET.

SYM	DESCRIPTION	DATE	APPR
1	AMENDMENT 003	04-26-16	JMH

NAVFAC

GREGORY L. VARNEY — STATE OF WASHINGTON — 25842 — STRUCTURAL ENGINEER — PROFESSIONAL ENGINEER — 02 Mar 16 — SEAL

kpff
1601 5th Avenue, Suite 1600
Seattle, WA 98101
206.622.5822
www.kpff.com
A/E INFO

APPROVED
FOR COMMANDER NAVFAC
ACTIVITY
SATISFACTORY TO DATE

DES JMH | DRW DYL | CHK GLV
PM/DM J. SHEPARD/L. ANDERSEN
BRANCH MANAGER D. STARKEL
CHIEF ENG/ARCH B. GALLOWAY
FIRE PROTECTION B. NIXON

DEPARTMENT OF THE NAVY
NAVAL FACILITIES ENGINEERING COMMAND
NAVAL FACILITIES ENGINEERING COMMAND ~ NORTHWEST
IPT NAVAL STATION – SILVERDALE, WASHINGTON
NAVAL BASE KITSAP – PSNS & IMF BREMERTON, WA
FY-16 MCON PROJECT P-431
DD-6 MODERNIZATION & UTILITY SITE IMPROVEMENTS
STRUCTURAL NOTES

SCALE: AS NOTED
EPROJECT NO.: 1355285
CONSTR. CONTR. NO. N44255-XX-X-XXXX
NAVFAC DRAWING NO./PWD NO. 16034498/80752
SHEET 46 OF 248
S-002

FILE NAME: U:\115000-115350\115199 (P431 DD6 Modernization)\01 GenlNotes\80752_S-002.dwg LAYOUT NAME: KPFF Plot Layout PLOTTED: Wednesday, March 02, 2016 - 2:21pm USER: DianeL

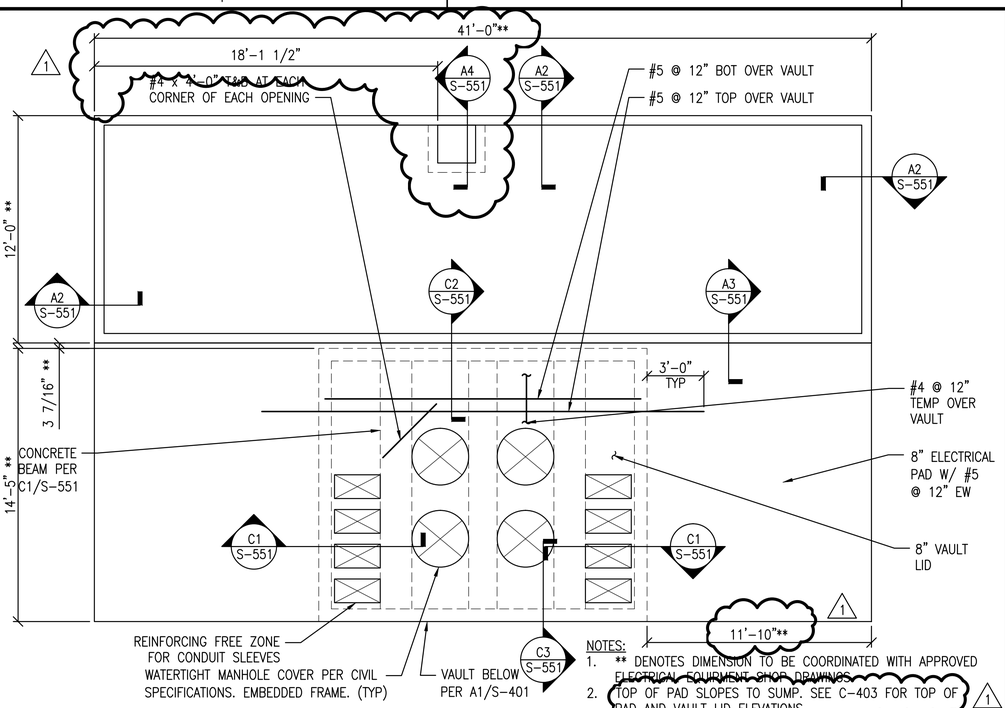

NOTES:
1. ** DENOTES DIMENSION TO BE COORDINATED WITH APPROVED ELECTRICAL EQUIPMENT SHOP DRAWINGS.
2. TOP OF PAD SLOPES TO SUMP. SEE C-403 FOR TOP OF PAD AND VAULT LID ELEVATIONS.

SUBSTATION 83A AND 83B SURFACE PLAN

SCALE: 1/4" = 1'-0"

S-103, S-401 C1

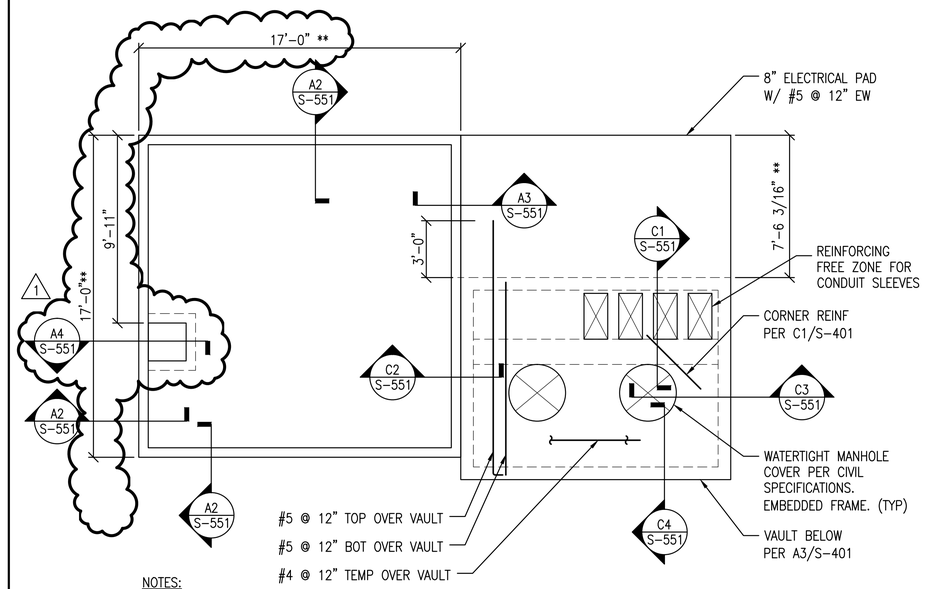

NOTES:
1. ** DENOTES DIMENSION TO BE COORDINATED WITH APPROVED ELECTRICAL EQUIPMENT SHOP DRAWINGS.
2. TOP OF PAD SLOPES TO SUMP. SEE C-402 FOR TOP OF PAD AND VAULT LID ELEVATIONS.

SUBSTATION 84A SURFACE PLAN

SCALE: 1/4" = 1'-0"

S-103 C3

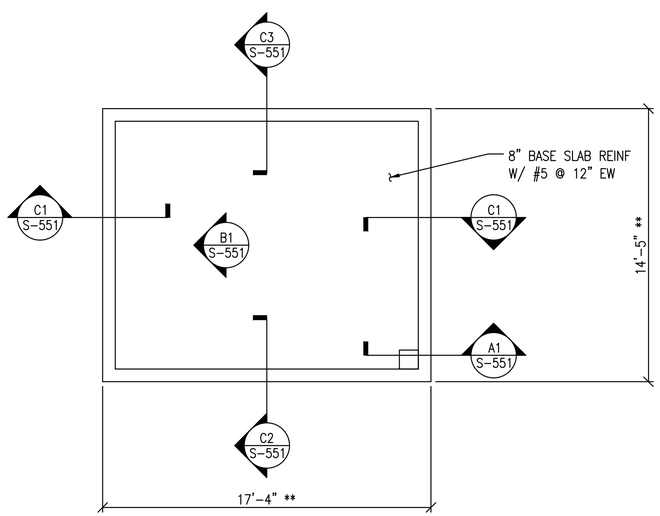

NOTES:
1. ** DENOTES DIMENSION TO BE COORDINATED WITH APPROVED ELECTRICAL EQUIPMENT SHOP DRAWINGS.

SUBSTATION 83A AND 83B SUBSURFACE PLAN

SCALE: 1/4" = 1'-0"

S-401 A1

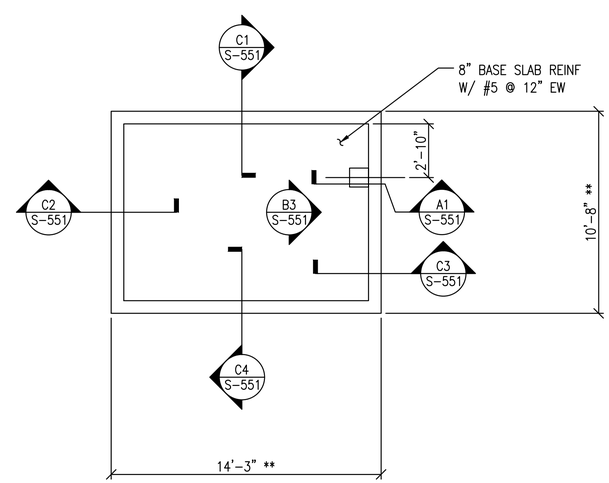

NOTES:
1. ** DENOTES DIMENSION TO BE COORDINATED WITH APPROVED ELECTRICAL EQUIPMENT SHOP DRAWINGS.

SUBSTATION 84A SUBSURFACE PLAN

SCALE: 1/4" = 1'-0"

S-401 A3

1/4" = 1'-0"

0 2 4 8 12

STM	DESCRIPTION	DATE	APPR
1	AMENDMENT 003	04-26-16	JMH

NAVFAC

LAUREY L. JOHNSON, STATE OF WASHINGTON, 25842, PROFESSIONAL ENGINEER, 02 Mar 16, SEAL

kpff
1601 5th Avenue, Suite 1600
Seattle, WA 98101
206.622.5822
www.kpff.com
A/E INFO

APPROVED
FOR COMMANDER NAVFAC
ACTIVITY
SATISFACTORY TO DATE

DES JMH DRW DYL CHK GLV
PM/DM J. SHEPARD/L. ANDERSEN
BRANCH MANAGER D. STARKEL
CHIEF ENG/ARCH B. GALLOWAY
FIRE PROTECTION B. NIXON

DEPARTMENT OF THE NAVY
NAVAL FACILITIES ENGINEERING COMMAND
NAVAL FACILITIES ENGINEERING COMMAND – NORTHWEST
NAVAL STATION – SILVERDALE, WASHINGTON
IPT
NAVAL BASE KITSAP – PSNS & IMF
BREMERTON, WA
FY-16 MCON PROJECT P-431
DD-6 MODERNIZATION & UTILITY SITE IMPROVEMENTS
SUBSTATION FOUNDATION PARTIAL PLANS

SCALE: AS NOTED
EPROJECT NO.: 1355285
CONSTR. CONTR. NO.: N44255-XX-X-XXXX
NAVFAC DRAWING NO./PWD NO.: 16034524/80778
SHEET 72 OF 248
S-401

DRAWFORM REVISION: 10 MARCH 2009

FILE NAME: U:\115000-115350\115199 (P431 DD6 Modernization)\02 Plans\80778_S-401.dwg LAYOUT NAME: KPFF Plot Layout PLOTTED: Wednesday, March 02, 2016 - 2:22pm USER: Daned.

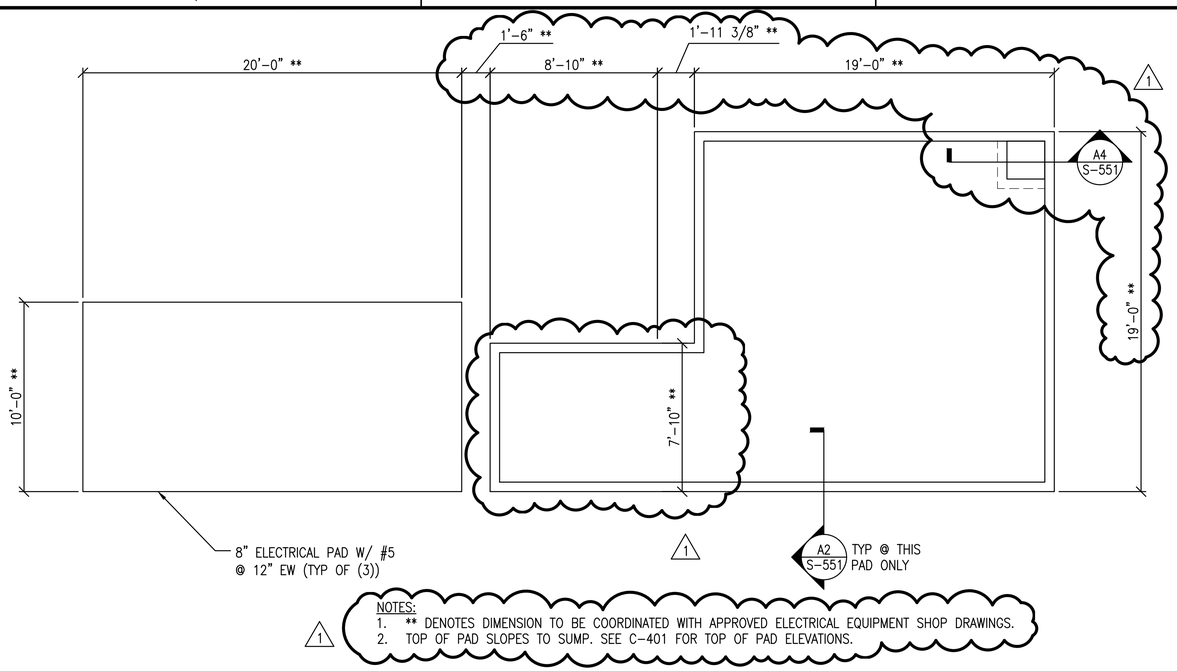

NOTES:
1. ** DENOTES DIMENSION TO BE COORDINATED WITH APPROVED ELECTRICAL EQUIPMENT SHOP DRAWINGS.
2. TOP OF PAD SLOPES TO SUMP. SEE C-401 FOR TOP OF PAD ELEVATIONS.

SUBSTATION N FOUNDATION PLAN

SCALE: 1/4" = 1'-0"

S-105 C1

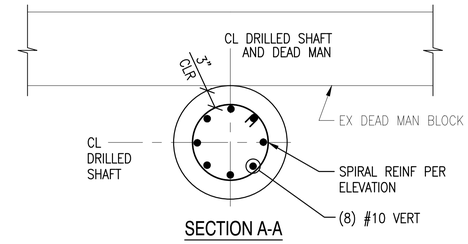

SECTION A-A

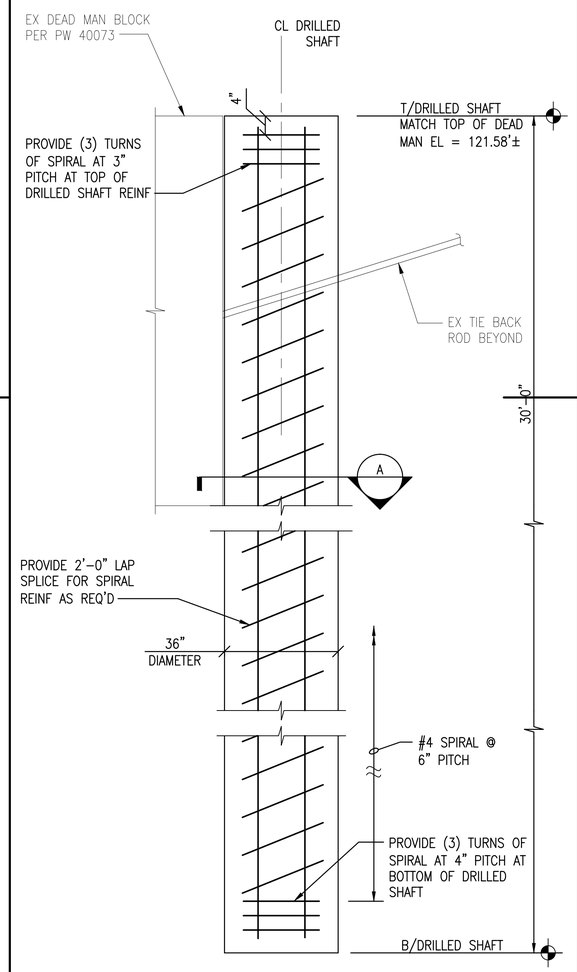

ELEVATION

NOTES:
1. VERTICAL BARS TO BE AT EQUAL SPACING AROUND DRILLED SHAFT PERIMETER.
2. LOCATE EX DEAD MAN BLOCK AND TIEBACKS BY VACUUM TRUCK EXCAVATION PRIOR TO DRILLED SHAFT INSTALLATION.

DRILLED SHAFT DETAIL

SCALE: 1" = 1'-0"

S-103 A3

1" = 1'-0"

0 1 2 3

1/4" = 1'-0"

0 2 4 8 12

STM	DESCRIPTION	DATE	APPR
1	AMENDMENT 003	04-26-16	JMH

NAVFAC

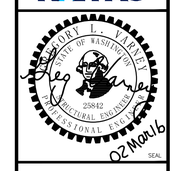

kpff
1601 5th Avenue, Suite 1600
Seattle, WA 98101
206.622.5822
www.kpff.com
A/E INFO

APPROVED

FOR COMMANDER NAVFAC

ACTIVITY

SATISFACTORY TO DATE

DES JMH DRW DYL CHK GLV
PM/DM J. SHEPARD/L. ANDERSEN
BRANCH MANAGER D. STARKEL
CHIEF ENG/ARCH B. GALLOWAY
FIRE PROTECTION B. NIXON

DEPARTMENT OF THE NAVY
NAVAL FACILITIES ENGINEERING COMMAND
NAVAL FACILITIES ENGINEERING COMMAND ~ NORTHWEST
NAVAL STATION - SILVERDALE, WASHINGTON
NAVAL BASE KITSAP – PSNS & IMF
BREMERTON, WA
IPT
FY-16 MCON PROJECT P-431
DD-6 MODERNIZATION & UTILITY SITE IMPROVEMENTS
SUBSTATION FOUNDATION PARTIAL PLANS

SCALE: AS NOTED
EPROJECT NO.: 1355285
CONSTR. CONTR. NO.: N44255-XX-X-XXXX
NAVFAC DRAWING NO./PWO NO.: 16034525/80779
SHEET 73 OF 248

S-402

DRAWFORM REVISION: 10 MARCH 2009

FILE NAME: U:\115000-115350\115199 (P431 DD6 Modernization)\02 Plans\80779_S-402.dwg LAYOUT NAME: KPFF Plot Layout PLOTTED: Wednesday, March 02, 2016 - 2:22pm USER: Danel.

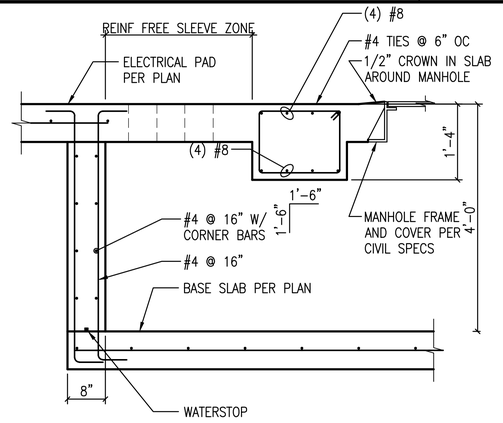

ELECTRICAL VAULT SECTION (C1)

SCALE: 3/4"=1'-0" S-401, S-551

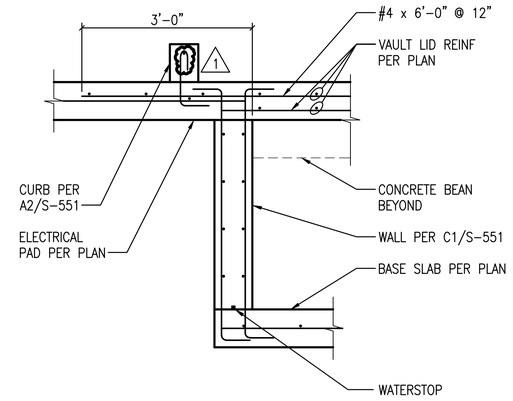

ELECTRICAL VAULT SECTION (C2)

SCALE: 3/4"=1'-0" S-401

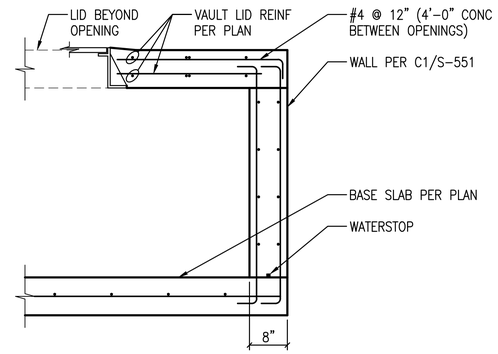

NOTE:
1. SEE C1/S-551 FOR INFORMATION NOT SHOWN.

ELECTRICAL VAULT SECTION (C3)

SCALE: 3/4"=1'-0" S-401

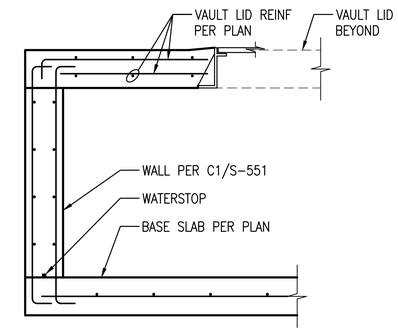

NOTE:
1. SEE C1/S-551 FOR INFORMATION NOT SHOWN.

ELECTRICAL VAULT SECTION (C4)

SCALE: 3/4"=1'-0" S-401

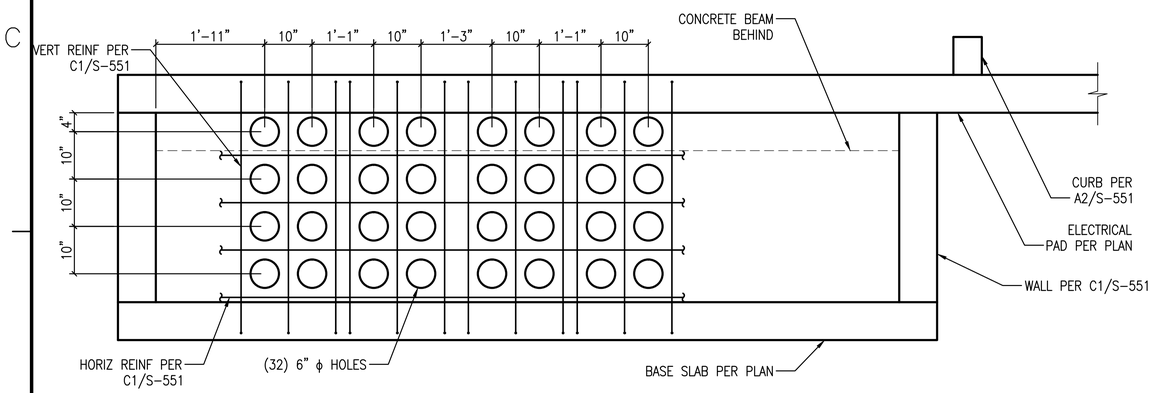

ELECTRICAL VAULT ELEVATION (B1)

SCALE: 3/4"=1'-0" S-401

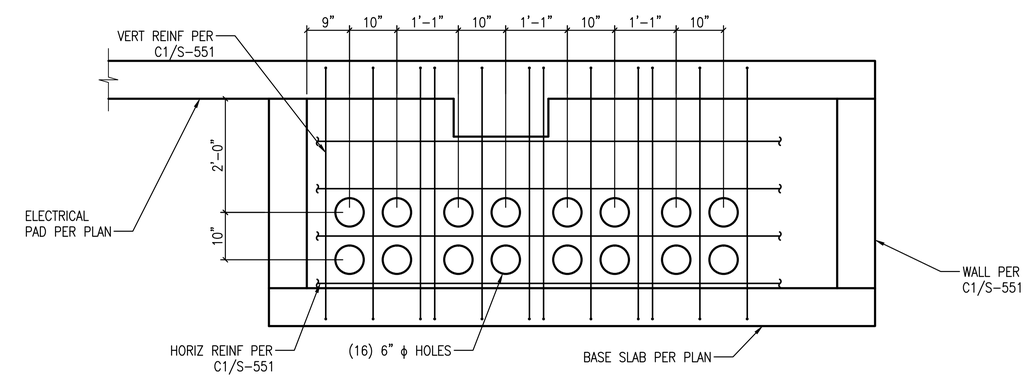

ELECTRICAL VAULT ELEVATION (B3)

SCALE: 3/4"=1'-0" S-401

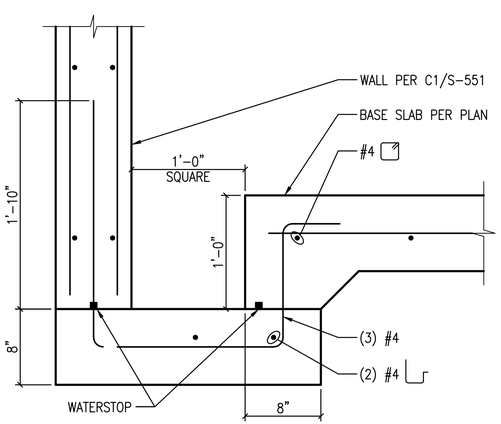

ELECTRICAL VAULT SECTION (A1)

SCALE: 1 1/2"=1'-0" S-401

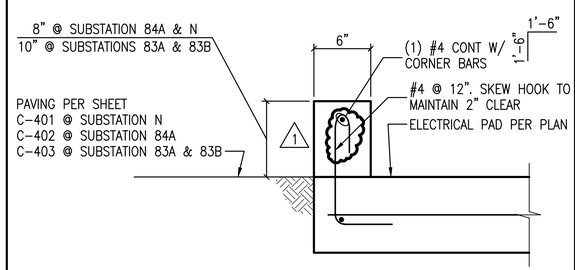

NOTE:
COORDINATE EMBEDDED ITEMS FOR GATE VALVE SHOWN ON A2/C-505.

ELECTRICAL PAD SECTION (A2)

SCALE: 1 1/2"=1'-0" S-401, S-402, S-551

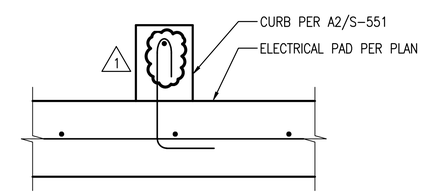

ELECTRICAL PAD SECTION (A3)

SCALE: 1 1/2"=1'-0" S-401

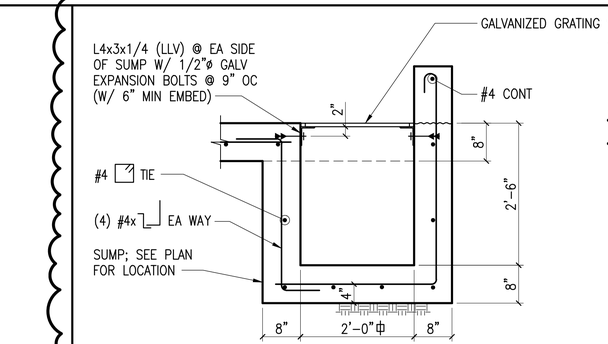

SUMP SECTION (A4)

SCALE: NTS S-401, S-402

1 1/2" = 1'-0" 3/4" = 1'-0"

0 1 2 0 1 2 4

1	AMENDMENT 003	04-26-16	JMH
SYM	DESCRIPTION	DATE	APPR

NAVFAC

kpff
1601 5th Avenue, Suite 1600
Seattle, WA 98101
206.622.5822
www.kpff.com
A/E INFO

APPROVED
FOR COMMANDER NAVFAC
ACTIVITY
SATISFACTORY TO DATE

DES: JMH DRW: DYL CHK: GLV
PM/CM J. SHEPARD/L. ANDERSEN
BRANCH MANAGER D. STARKEL
CHIEF ENG/ARCH B. GALLOWAY
FIRE PROTECTION B. NIXON

DEPARTMENT OF THE NAVY
NAVAL FACILITIES ENGINEERING COMMAND
NAVAL FACILITIES ENGINEERING COMMAND – NORTHWEST
NAVAL BASE KITSAP – PSNS & IMF NAVAL STATION – SILVERDALE, WASHINGTON BREMERTON, WA
FY-16 MCON PROJECT P-431
DD-6 MODERNIZATION & UTILITY SITE IMPROVEMENTS
ELECTRICAL VAULT SECTIONS AND DETAILS

SCALE: AS NOTED
EPROJECT NO.: 1355285
CONSTR. CONTR. NO. N44255-XX-X-XXXX
NAVFAC DRAWING NO./PWO NO. 16034544/80798
SHEET 92 OF 248
S-551

DRAWFORM REVISION: 10 MARCH 2009

FILE NAME: U:\115000-115350\115199 (P431 DD6 Modernization)\04 Details\80798_S-551.dwg LAYOUT NAME: KPFF Plot Layout PLOTTED: Wednesday, March 02, 2016 – 2:23pm USER: Dionel, R. Dionel

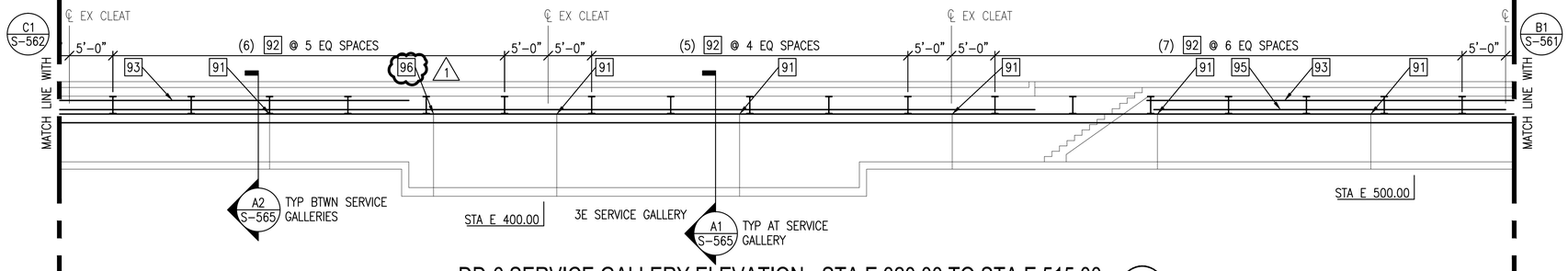

DD-6 SERVICE GALLERY ELEVATION - STA E 320.00 TO STA E 515.00 (D1)

SCALE: 1/8"=1'-0"

S-103, S-561, S-562

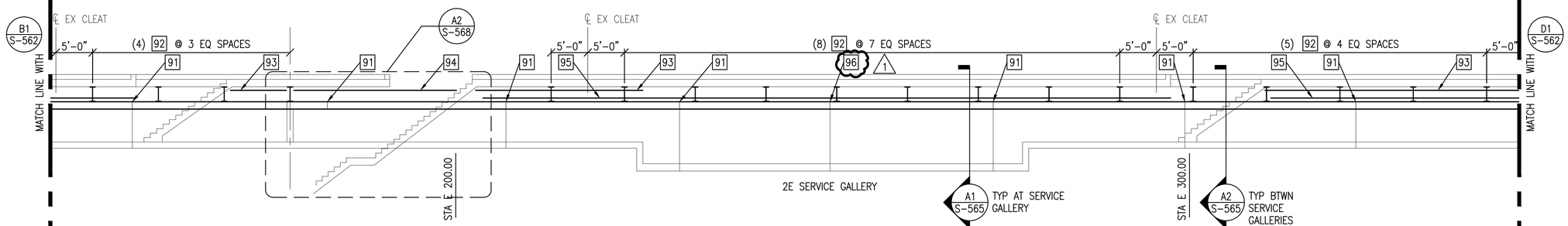

DD-6 SERVICE GALLERY ELEVATION - STA E 145.00 TO STA E 325.00 (C1)

SCALE: 1/8"=1'-0"

S-103, S-104, S-562

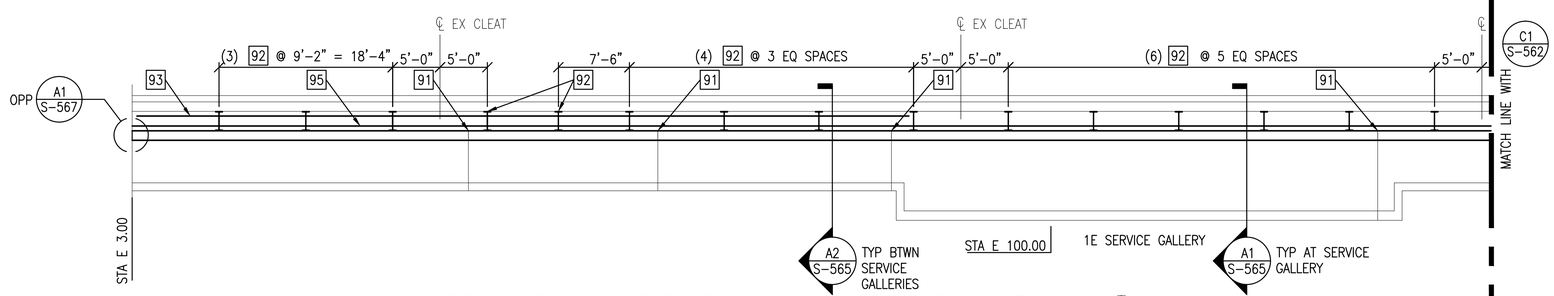

DD-6 SERVICE GALLERY ELEVATION - STA E 3.00 TO STA E 145.00 (B1)

SCALE: 1/8"=1'-0"

S-104, S-562

KEY NOTES:

ITEM	DETAIL	DESCRIPTION	QTY
91	C2/S-567	CONSTRUCTION JOINT	17
92	A4/S-566	SUPPORT STRUT	50
93	A3/S-567	UPPER TIE RAIL	230 LF
94	A2/S-569	UPPER TIE RAIL	25 LF
95	A2/S-566	LOWER TIE RAIL	435 LF
96	A4/S-567	EXPANSION JOINT	2

1

NOTES:

1. MECHANICAL TUNNEL STATIONING IS BASED ON EXISTING MARKS ON ONE WALL IN EACH TUNNEL. THE MARKS ARE IN WHITE PAINT IN 10-FOOT INCREMENTS WITH STATION NUMBERS NOTED IN 50-FOOT INCREMENTS.
2. MECHANICAL TUNNEL STATIONS NOTED ARE ESTIMATED AND MAY VARY BY +/- 1 FOOT. FIELD VERIFY EXISTING CONDITIONS PRIOR TO STARTING CONSTRUCTION.
3. PROVIDE ADDITIONAL CONSTRUCTION JOINTS AS REQUIRED FOR WORK SEQUENCING IN ACCORDANCE WITH C4/S-567.

1/8" = 1'-0"

0 4 8 16 24

STM	DESCRIPTION	DATE	APPR
1	AMENDMENT 003	04-26-16	JMH

NAVFAC

SEAL: 02 Mar 16

kpff
1601 5th Avenue, Suite 1600
Seattle, WA 98101
206.622.5822
www.kpff.com
A/E INFO

APPROVED

FOR COMMANDER NAVFAC

ACTIVITY

SATISFACTORY TO DATE

DES JMH DRW DYL CHK GLV
PM/DM J. SHEPARD/L. ANDERSEN
BRANCH MANAGER D. STARKEL
CHIEF ENG/ARCH B. GALLOWAY
FIRE PROTECTION B. NIXON

DEPARTMENT OF THE NAVY
NAVAL FACILITIES ENGINEERING COMMAND
NAVAL FACILITIES ENGINEERING COMMAND ~ NORTHWEST
NAVAL STATION - SILVERDALE, WASHINGTON
BREMERTON, WA
NAVAL BASE KITSAP – PSNS & IMF
FY-16 MCON PROJECT P-431
DD-6 MODERNIZATION & UTILITY SITE IMPROVEMENTS
DD-6 EAST GALLERY ELEVATION

SCALE: AS NOTED
EPROJECT NO. 1355285
CONSTR. CONTR. NO. N44255-XX-X-XXXX
NAVFAC DRAWING NO./PWD NO. 16034547/80801
SHEET 95 OF 248

S-562

DRAWFORM REVISION: 10 MARCH 2009

FILE NAME: U:\115000-115350\115199 (P431 DD6 Modernization)\04 Details\80801_S-562.dwg LAYOUT NAME: KPFF Plot Layout PLOTTED: Wednesday, March 02, 2016 - 2:23pm USER: DanelL

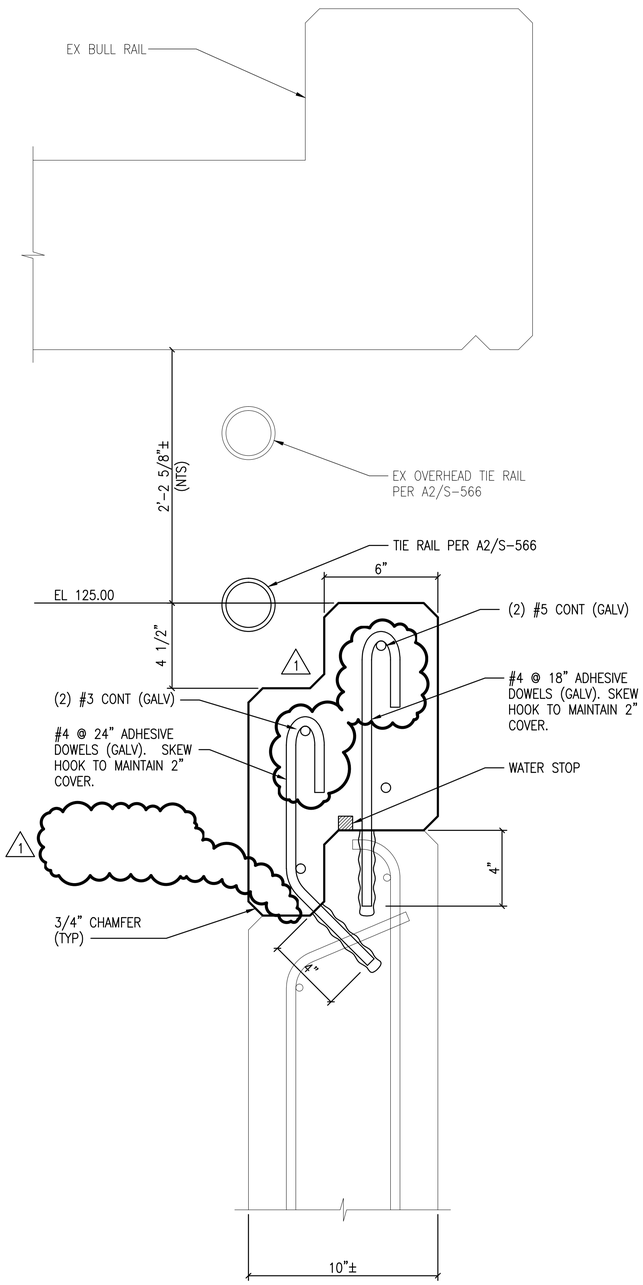

SERVICE GALLERY SECTION - REINFORCING (A1)

SCALE: 3"=1'-0" S-565, S-566, S-567

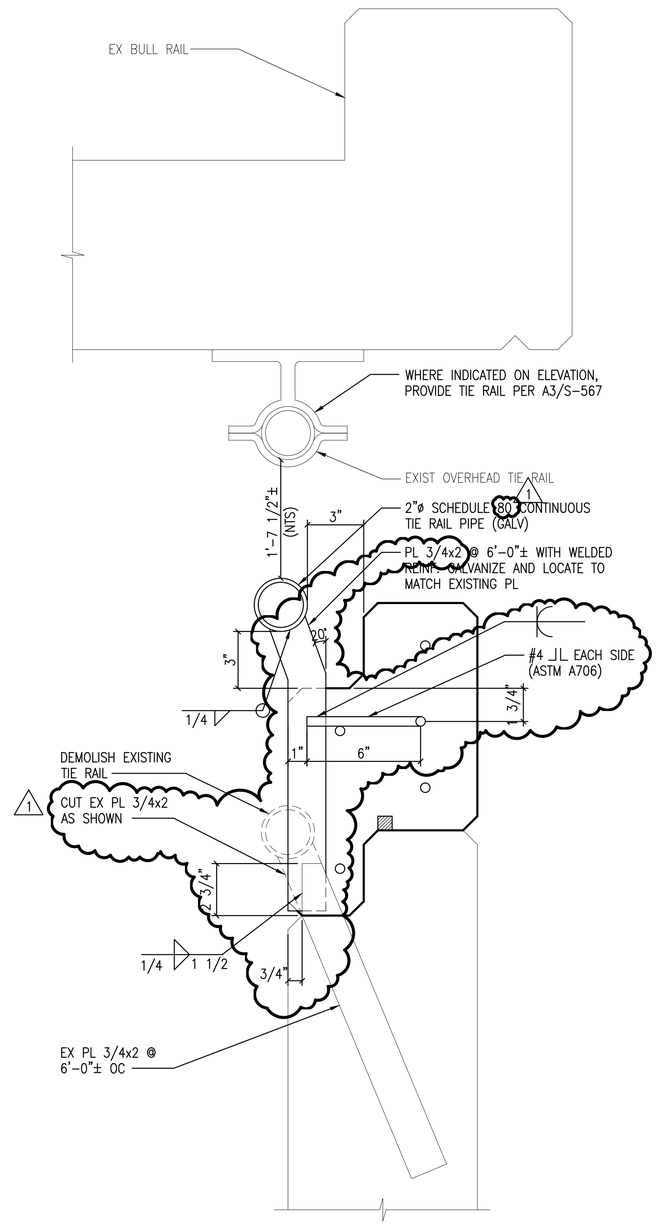

NOTE:
1. TIE RAIL TO BE FIELD SPLICED AS REQUIRED TO CREATE CONTINUOUS RAIL OR TO ACCOMMODATE WORK SEQUENCING. SPLICE WITH ALL AROUND COMPLETE PENETRATION WELD.
2. WHERE TIE RAIL TERMINATES, PROVIDE 1/4" CAP PLATE, SEAL WELDED ALL AROUND.
3. SEE A1/S-566 FOR INFORMATION NOT NOTED.

SERVICE GALLERY SECTION - TIE RAIL (A2)

SCALE: 3"=1'-0" S-565

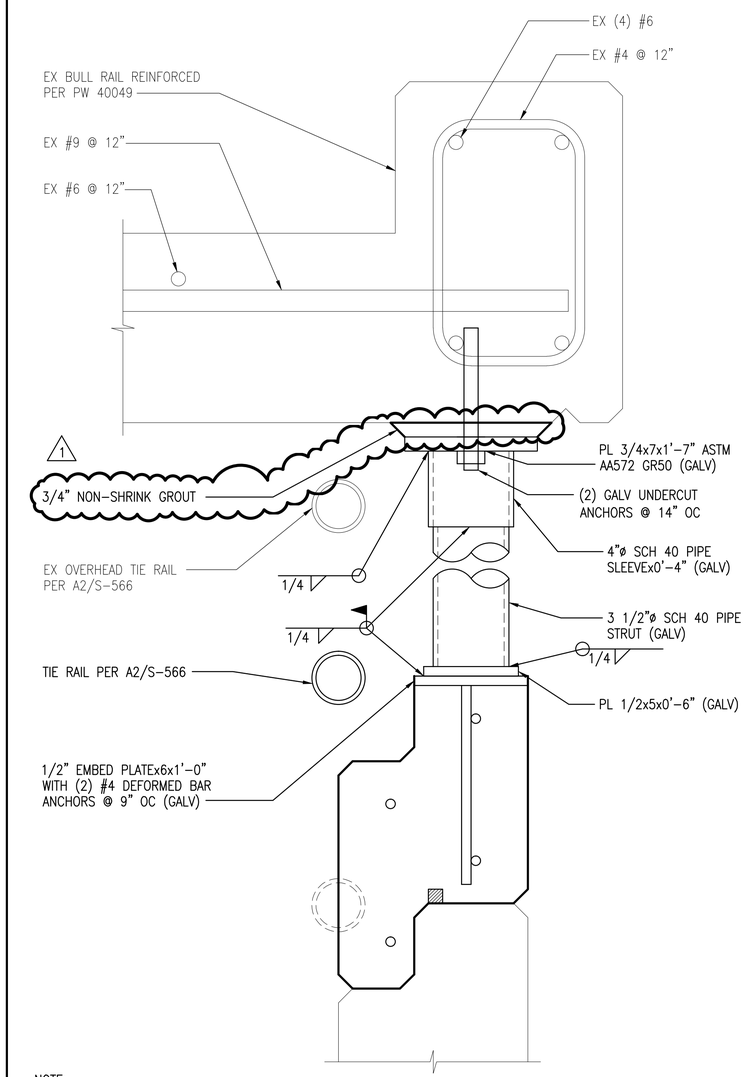

NOTE:
1. ADJUST STRUT SPACING UP TO 6" TO RESOLVE CONFLICTS WITH EXISTING REINFORCING AND TIE RAIL SUPPORT BRACKETS.
2. SEE A1/S-566 FOR INFORMATION NOT NOTED.
3. MACHINE PIPE SLEEVE SO THAT STRUT PIPE WILL FIT INSIDE THE SLEEVE AFTER GALVANIZING. REMOVE NO MORE THAN 1/16" OF MATERIAL.
4. INSTALL EMBED PLATE LEVEL SUCH THAT GAP BETWEEN BASE PLATE AND EMBED PLATE WILL NOT EXCEED THE PERMITTED GAP DISTANCE FOR FILLET WELDS IN ACCORDANCE WITH AWS D1.1.
5. THE FOLLOWING ARE ACCEPTABLE UNDERCUT ANCHORS: HILTI HDA-P M-12X125/50 WITH 4.92" EFFECTIVE EMBED DEPTH; SIMPSON TORQ-CUT 1/2" ø X 5.75" EFFECTIVE EMBED DEPTH; POWERS ATOMIC+ 5/8" ø X 4.5" EFFECTIVE EMBED DEPTH. ALTERNATE ANCHORS PROVIDING A CAPACITY EQUAL TO OR EXCEEDING A SIMULTANEOUS ULTIMATE TENSION LOAD OF 14,400 POUNDS AND AN ULTIMATE SHEAR LOAD OF 4,000 POUNDS ARE ACCEPTABLE PROVIDED THAT THE FOLLOWING CRITERIA ARE MET:
   - THE ANCHOR BOLT CAPACITY IS BASED ON CRACKED CONCRETE WITH A MINIMUM COMPRESSIVE STRENGTH, F'C, OF 3,500 PSI AND THE ANCHOR GEOMETRY DEFINED ABOVE.
   - THE ANCHOR HAS AN ICC-ESR DEMONSTRATING COMPLIANCE OF THE ANCHOR WITH THE 2012 INTERNATIONAL BUILDING CODE.
   - SUPPORTING CALCULATIONS STAMPED BY PROFESSIONAL ENGINEER LICENSED IN THE STATE OF WASHINGTON ARE SUBMITTED, DEMONSTRATING COMPLIANCE OF THE ANCHOR WITH THE ABOVE LOAD CRITERIA.

3" = 1'-0"

0 1/2 1

SERVICE GALLERY SECTION - STRUT (A4)

SCALE: 3"=1'-0" S-561, S-562, S-563, S-564, S-565, S-568

SYM	DESCRIPTION	DATE	APPR
1	AMENDMENT 003	04-26-16	JMH

NAVFAC

kpff
1601 5th Avenue, Suite 1600
Seattle, WA 98101
206.622.5822
www.kpff.com
A/E INFO

APPROVED
FOR COMMANDER NAVFAC
ACTIVITY
SATISFACTORY TO DATE

DES JMH DRW DYL CHK GLV
PM/DM J. SHEPARD/L. ANDERSEN
BRANCH MANAGER D. STARKEL
CHIEF ENG/ARCH B. GALLOWAY
FIRE PROTECTION B. NIXON

DEPARTMENT OF THE NAVY: NAVAL FACILITIES ENGINEERING COMMAND
NAVAL FACILITIES ENGINEERING COMMAND – NORTHWEST
NAVAL STATION – SILVERDALE, WASHINGTON
IPT NAVAL BASE KITSAP – PSNS & IMF
BREMERTON, WA
FY-16 MCON PROJECT P-431
DD-6 MODERNIZATION & UTILITY SITE IMPROVEMENTS
SERVICE GALLERY SECTIONS AND DETAILS

SCALE: AS NOTED
EPROJECT NO: 1355285
CONSTR. CONTR. NO. N44255-XX-X-XXXX
NAVFAC DRAWING NO./PWO NO. 16034551/80805
SHEET 99 OF 248
S-566

DRAWFORM REVISION: 10 MARCH 2009

FILE NAME: U:\115000-115350\115199 (P431 D06 Modernization)\04 Details\80805_S-566.dwg LAYOUT NAME: KPFF Plot Layout PLOTTED: Wednesday, March 02, 2016 - 2:23pm USER: DianeL

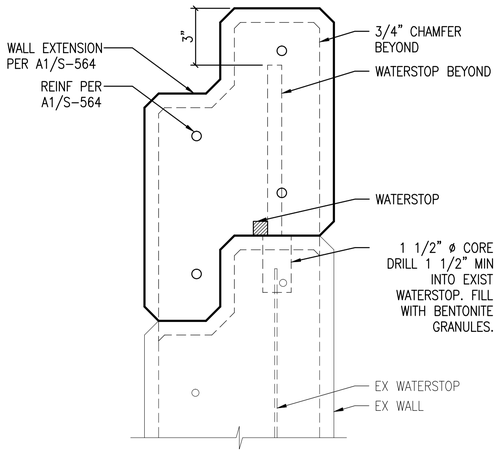

CONSTRUCTION JOINT SECTION

SCALE: 3"=1'-0" S-567 (C1)

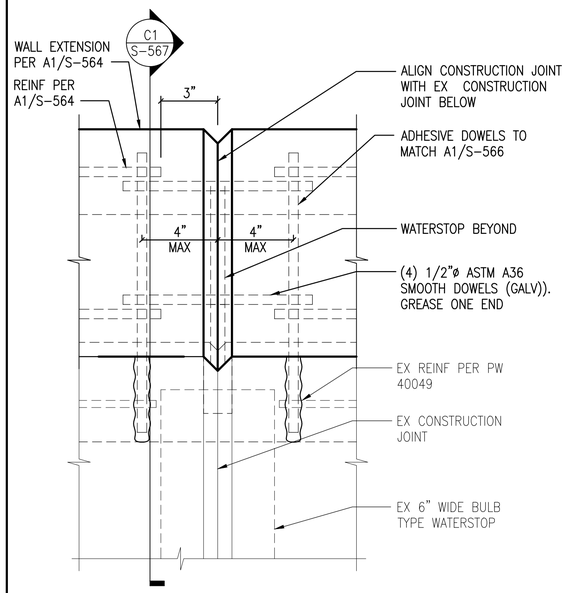

CONSTRUCTION JOINT DETAIL

SCALE: 3"=1'-0" S-561, S-562, S-563, S-564, S-567 (1 C2)

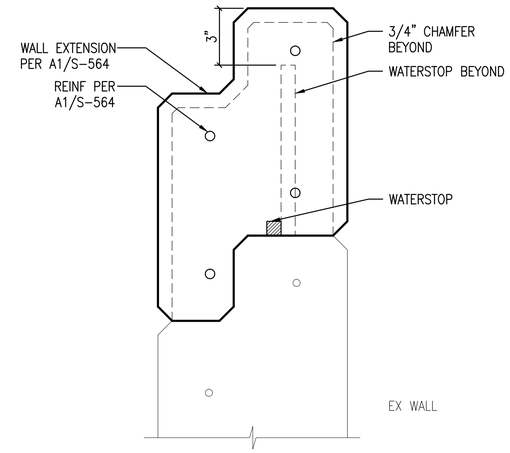

CONSTRUCTION JOINT SECTION

SCALE: 3"=1'-0" S-567 (C3)

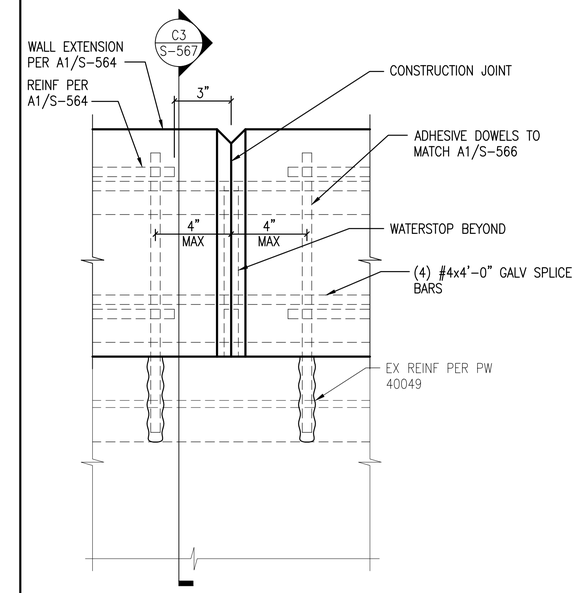

CONSTRUCTION JOINT DETAIL

SCALE: 3"=1'-0" S-561, S-562, S-563, S-564 (C4)

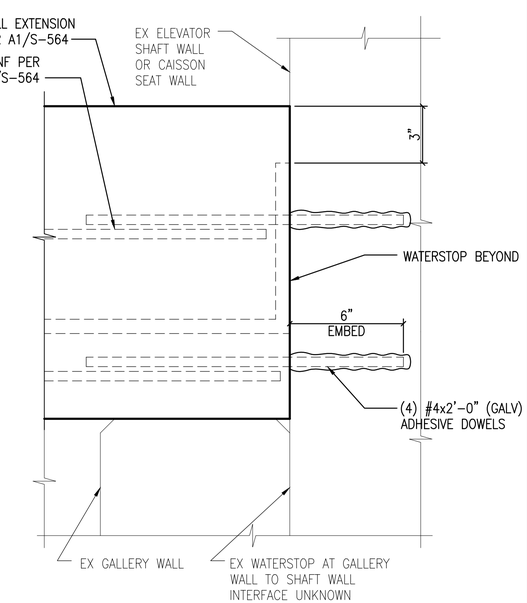

TERMINATION DETAIL

SCALE: 3"=1'-0" S-561, S-562, S-564 (A1)

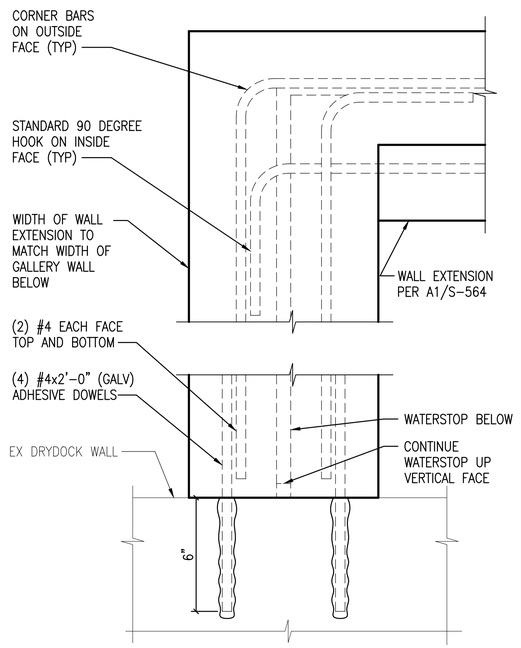

TERMINATION DETAIL

SCALE: 3"=1'-0" S-563, S-568 (A2)

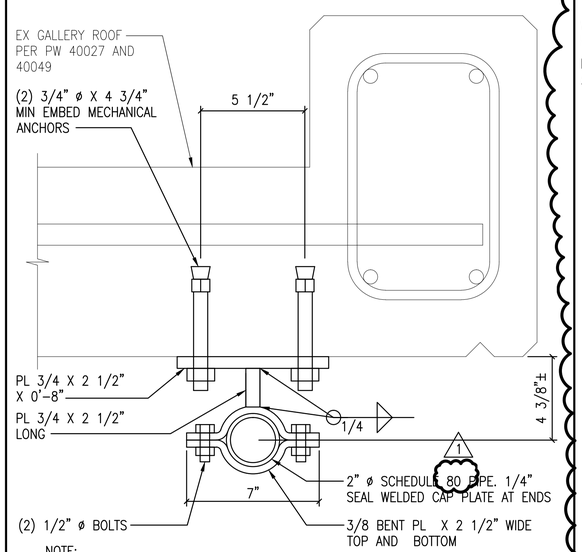

NOTE:
1. ALL MATERIAL THIS DETAIL IS HOT DIP GALVANIZED
2. END CAPS AND SPLICES PER A3/S-569.
3. PROVIDE RAIL SUPPORTS 1'-0" FROM PIPE ENDS AND AT 6'-0" OC MAX
4. MAXIMUM LOAD ON RAIL IS 2500 LBS AT 6'-0" OC PER PW 40014.

TIE RAIL SECTION

SCALE: 3"=1'-0" S-561, S-562, S-563, S-564, S-566, S-569 (A3)

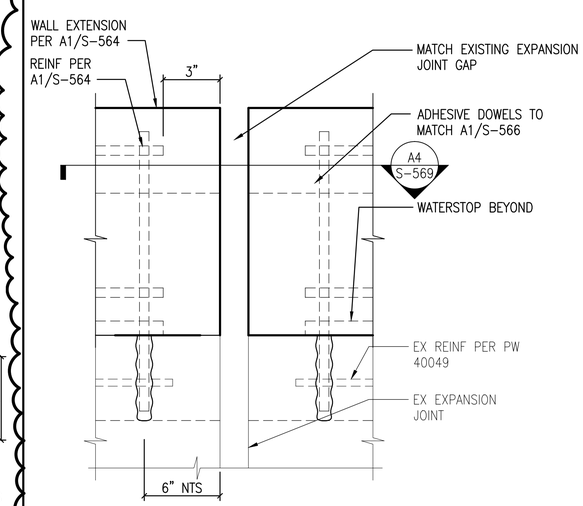

EXPANSION JOINT DETAIL

SCALE: 3"=1'-0" S-562 (A4)

3" = 1'-0"

0 1/2 1

SYM	DESCRIPTION	DATE	APPR
1	AMENDMENT 003	04-26-16	JMH

NAVFAC

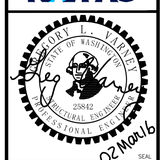

SEAL

kpff
1601 5th Avenue, Suite 1600
Seattle, WA 98101
206.622.5822
www.kpff.com
A/E INFO

APPROVED
CO COMMANDER NAVFAC
ACTIVITY
SATISFACTORY TO DATE
CS JMH DRW DYL CHK GLV
A/DM J. SHEPARD/L. ANDERSEN
BRANCH MANAGER D. STARKEL
CHIEF ENG/ARCH B. GALLOWAY
FIRE PROTECTION B. NIXON

DEPARTMENT OF THE NAVY
NAVAL FACILITIES ENGINEERING AND ASSOCIATED COMMAND ~ NORTHWEST
NAVAL STATION - SILVERDALE, WASHINGTON BREMERTON, WA
IPT NAVAL BASE KITSAP – PSNS & IMF
FY-16 MCON PROJECT P-431
DD-6 MODERNIZATION & UTILITY SITE IMPROVEMENTS
SERVICE GALLERY SECTIONS AND DETAILS

SCALE: AS NOTED
EPROJECT NO.: 1355285
CONSTR. CONTR. NO.: N44255-XX-X-XXXX
NAVFAC DRAWING NO./PWO NO.: 16034552/80806
SHEET 100 OF 248
S-567

DRAWFORM REVISION: 10 MARCH 2009

FILE NAME: U:\115000-115350\115199 (P431 DD6 Modernization)\04 Details\80806_S-567.dwg LAYOUT NAME: KPFF Plot Layout PLOTTED: Wednesday, March 02, 2016 - 2:24pm USER: DoneL

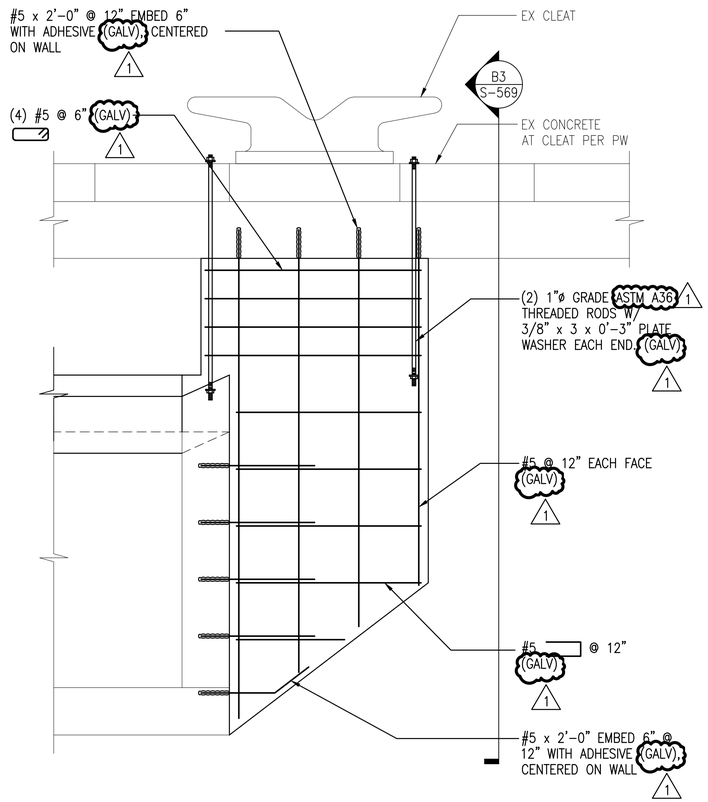

ELEVATION AT CLEAT

SCALE: 3/4"=1'-0" S-561, S-563, S-569 B1

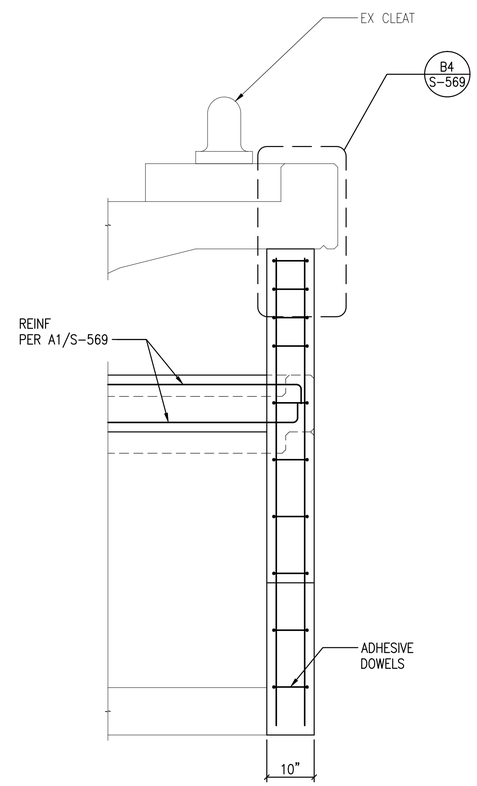

SECTION AT CLEAT

SCALE: 3/4"=1'-0" S-569 B3

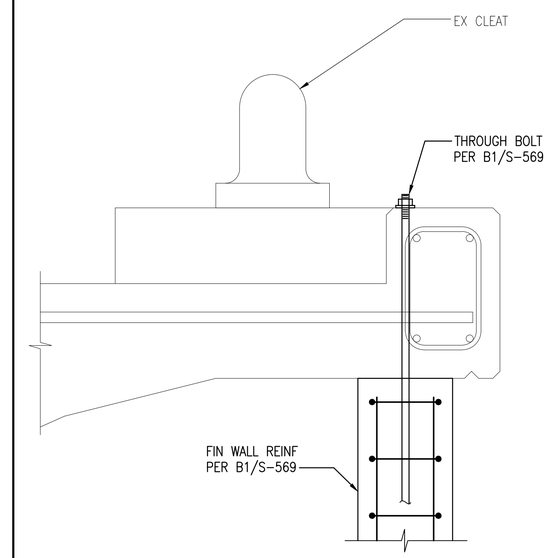

DETAIL AT CLEAT

SCALE: 1 1/2"=1'-0" S-569 B4

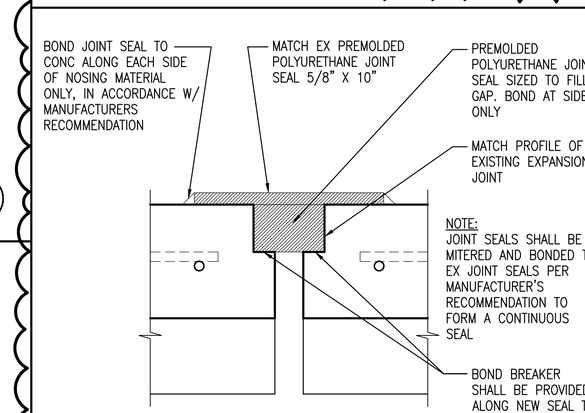

DETAIL AT EXPANSION JOINT

SCALE: 1 1/2"=1'-0" S-567 A4

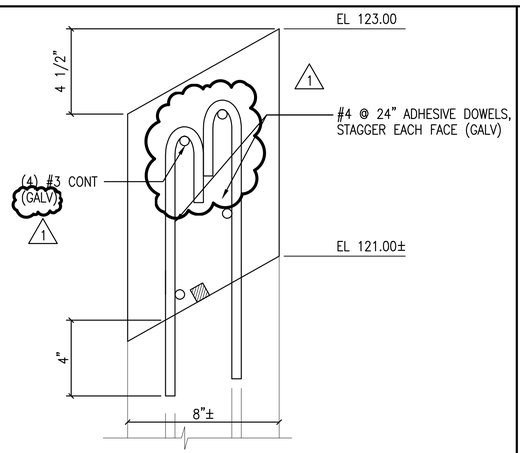

WALL EXTENSION AT STAIR

SCALE: 3"=1'-0" S-565, S-569 A1

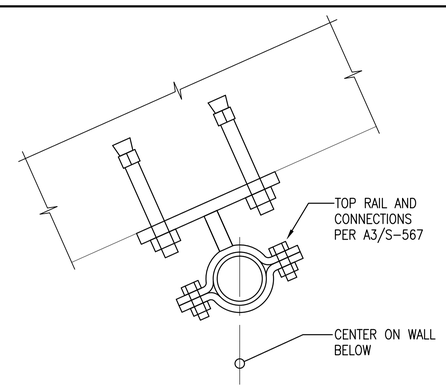

TOP RAIL, AT STAIR

SCALE: 3"=1'-0" S-565 A2

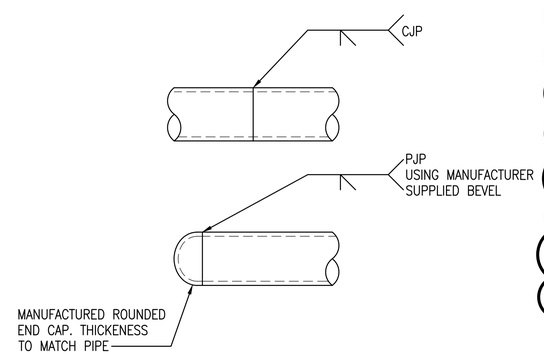

RAIL SPLICE DETAILS

SCALE: 3"=1'-0" S-565 A3

1

3/4" = 1'-0" 0 1 2 4

1 1/2" = 1'-0" 0 1 2

3" = 1'-0" 0 1/2 1

SYM	DESCRIPTION	DATE	APPR
1	AMENDMENT 003	04-26-16	JMH

NAVFAC

SEAL: JEFFREY L. DYRAKY, STATE OF WASHINGTON, 25842, PROFESSIONAL ENGINEER, 02 Mar 16

kpff
1601 5th Avenue, Suite 1600
Seattle, WA 98101
206.622.5822
www.kpff.com
A/E INFO

APPROVED
FOR COMMANDER NAVFAC
ACTING
DATE
COPY TO DATE

DESIGN JMH DRWN DYL CHK GLV
PM/DM J. SHEPARD/L. ANDERSEN
BRANCH MANAGER D. STARKEL
CHIEF ENG/ARCH B. GALLOWAY
FIELD DIRECTION B. NIXON

DEPARTMENT OF THE NAVY
NAVAL FACILITIES ENGINEERING COMMAND NORTHWEST
NAVAL BASE KITSAP – PSNS & IMF NAVAL STATION - SILVERDALE, WASHINGTON BREMERTON, WA
FY-16 MCON PROJECT P-431
DD-6 MODERNIZATION & UTILITY SITE IMPROVEMENTS
SERVICE GALLERY SECTIONS AND DETAILS

SCALE: AS NOTED
EPROJECT NO. 1355285
CONSTR. CONTR. NO. N44255-XX-X-XXXX
NAVFAC DRAWING NO./PWD NO. 16034554/80808
SHEET 102 OF 248
S-569

DRAWFORM REVISION: 10 MARCH 2009

FILE NAME: U:\115000-115350\115199 (P431 DD6 Modernization)\04 Details\80808_S-569.dwg LAYOUT NAME: KPFF Plot Layout PLOTTED: Wednesday, March 02, 2016 - 2:24pm USER: DionelL

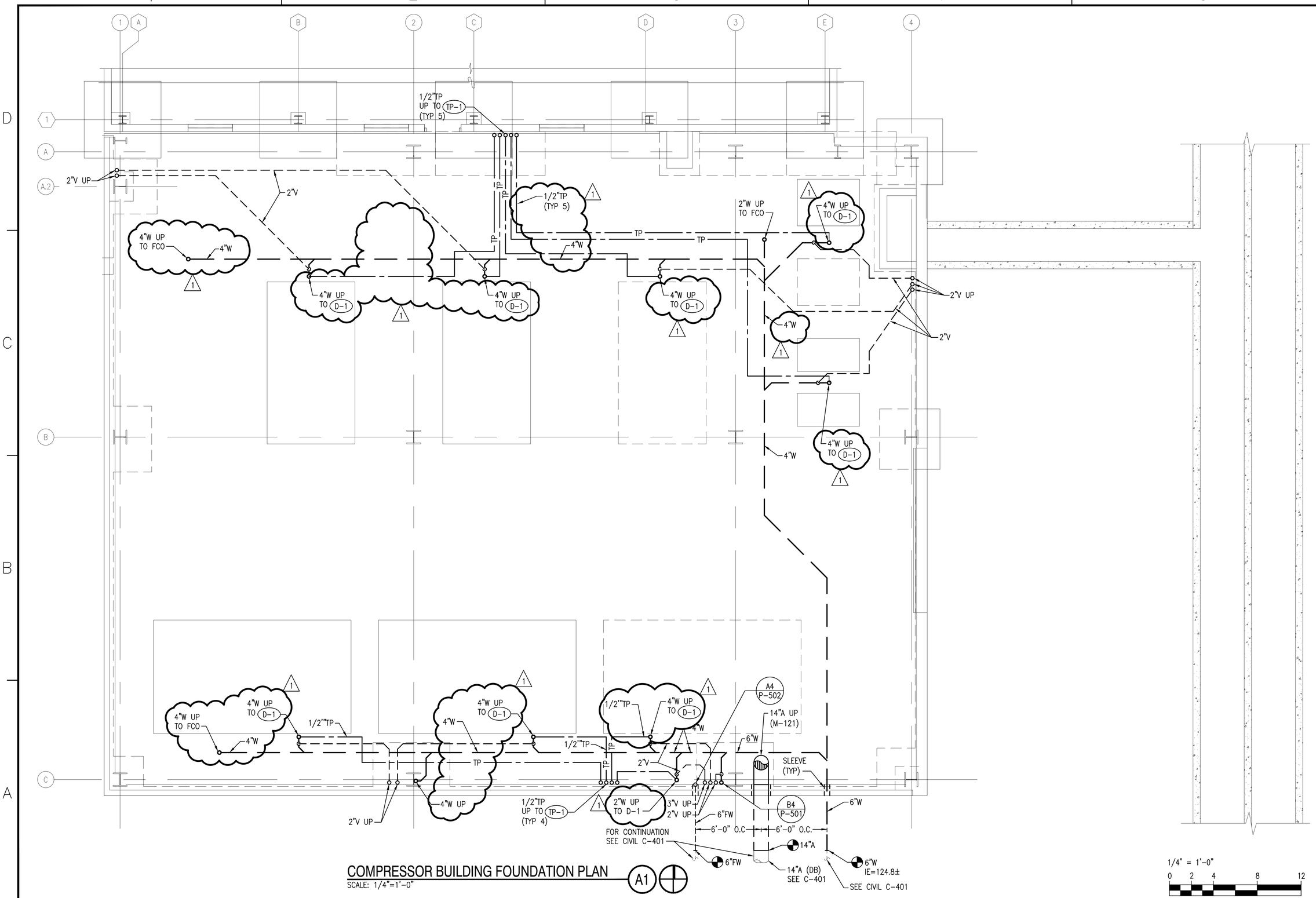

COMPRESSOR BUILDING FOUNDATION PLAN (A1)

SCALE: 1/4"=1'-0"

SYM	DESCRIPTION	DATE	APPR
1	AMENDMENT 003	4/26/16	JVH

NAVFAC

LARRY D. SWARTZ — STATE OF WASHINGTON — 27501 — REGISTERED PROFESSIONAL ENGINEER

01/27/16 SEAL

notkin
mechanical engineers
www.notkin.com
telephone: 206.448.1911
facsimile: 206.448.9485
2301 5th Avenue, Suite 401
Seattle, WA 98121

Contact: Larry Swartz, P.E.
notkin#: 215031
A/E INFO

APPROVED

FOR COMMANDER NAVFAC

ACTIVITY

SATISFACTORY TO DATE

DES: JH | DRW: RR | CHK: LS

PM/DM: J. SHEPARD/L. ANDERSEN

BRANCH MANAGER: K. PAULSON

CHIEF ENG/ARCH: B. GALLOWAY

FIRE PROTECTION: B. NIXON

DEPARTMENT OF THE NAVY
NAVAL FACILITIES ENGINEERING COMMAND
NAVAL FACILITIES ENGINEERING COMMAND ~ NORTHWEST
NAVAL BASE KITSAP – PSNS & IMF
NAVAL STATION – SILVERDALE, WASHINGTON
BREMERTON, WA

FY-16 MCON PROJECT P-431
DD-6 MODERNIZATION & UTILITY SITE IMPROVEMENTS

COMPRESSOR BUILDING FOUNDATION PLAN

SCALE: AS NOTED

EPROJECT NO.: 1355285

CONSTR. CONTR. NO.: N44255–XX–X–XXXX

NAVFAC DRAWING NO./PWD NO.: 16034567/80821

SHEET 115 OF 248

P-121

DRAWFORM REVISION: 10 MARCH 2009

L:\PROJECTS\215031 - Navy 1100\11 PSNS P-431 DD-6 Modernization\Drawings\80821_P-121.dwg, 4/25/2016 11:44:46 AM, kh

PLC CONTROL POINTS MATRIX

DEVICE NUMBER	DEVICE IDENTITY	SERVES	DESCRIPTION	UNITS	ANALOG INPUT (AI)	ANALOG OUTPUT (AO)	DIGITAL INPUT (DI)	DIGITAL OUTPUT (DO)	HI ALARM	HI FAULT	LO ALARM	LO FAULT	TRENDING	OVERRIDE	TOTALIZE	GRAPHICS	COMMENTS
			CENTRIFUGAL AIR COMPRESSSORS														
1209	PT (F)	AC–12	MACHINE DISCHARGE AIR PRESSURE	PSIG	X				X	X			X			X	
[5]	FCV (F)	AC–12	OA COMPRESSOR INLET VANES	%	X								X			X	% VANES OPEN
1205	FCV (F)	AC–12	COMPRESSED AIR BLOW OFF CONTROL VALVE	%	X								X			X	% VALVE CLOSED
1210	FCV (F)	AC–12	COMPRESSED AIR BLOCK CONTROL VALVE				X						X			X	2–POSITION VALVE
[5]	TT (F)	AC–12	OIL TEMPERATURE	DEG F					X	X	X	X	X			X	
1208	TT (F)	AC–12	MACHINE DISCHARGE AIR TEMPERATURE	DEG F	X				X	X	X	X	X			X	
[5]	PT (F)	AC–12	OIL PRESSURE	PSIG					X	X	X	X	X			X	
[5]	IY (F)	AC–12	MOTOR CURRENT	AMPS	X				X	X	X	X	X		X	X	CALCULATE KWH TO TOTALIZE
[5]	VT (F)	AC–12	STAGE 1 VIBRATION	MILS					X	X	X	X	X			X	
[5]	VT (F)	AC–12	STAGE 2 VIBRATION	MILS					X	X	X	X	X			X	
[5]	VT (F)	AC–12	STAGE 3 VIBRATION	MILS					X	X	X	X	X			X	
[5]	TT (F)	AC–12	STAGE 1 AIR TEMPERATURE	DEG F					X	X	X	X	X			X	
[5]	TT (F)	AC–12	STAGE 2 AIR TEMPERATURE	DEG F					X	X	X	X	X			X	
[5]	TT (F)	AC–12	STAGE 3 AIR TEMPERATURE	DEG F					X	X	X	X	X			X	
[5]	PT (F)	AC–12	STAGE 1 AIR PRESSURE	PSIG					X	X	X	X	X			X	
[5]	PT (F)	AC–12	STAGE 2 AIR PRESSURE	PSIG					X	X	X	X	X			X	
		AC–12	STAGE 3 AIR PRESSURE	PSIG													SAME AS 1209
[5]	VT (F)	AC–12	BULLGEAR VIBRATION	MILS					X	X	X	X	X			X	
[5]	TT (F)	AC–12	WINDING TEMPERATURE A	DEG F					X	X	X	X	X			X	
[5]	TT (F)	AC–12	WINDING TEMPERATURE B	DEG F					X	X	X	X	X			X	
[5]	TT (F)	AC–12	WINDING TEMPERATURE C	DEG F					X	X	X	X	X			X	
[5]	TT (F)	AC–12	INBOARD BEARING TEMPERATURE	DEG F					X	X	X	X	X			X	
1206	TT (F)	AC–12	CCWS WATER TEMPERATURE IN	DEG F	X				X	X	X	X	X			X	
1207	TT (F)	AC–12	CCWR WATER TEMPERATURE OUT	DEG F	X				X	X	X	X	X			X	
[5]	(F)	AC–12	ALARM INDICATION				X						X			X	
[5]	(F)	AC–12	FAULT INDICATION				X						X			X	
[5]	(F)	AC–12	ALARM AND/OR FAULT INDICATION				X									X	
[5]	(F)	AC–12	COMPRESSOR READY TO START				X									X	
[5]	YY (F)	AC–12	COOLING FLOW (ON/OFF STATUS)				X						X			X	
[5]	YC (F)	AC–12	AUXILIARY OIL PUMP (ON/OFF STATUS)				X						X			X	
[5]	(F)	AC–12	AUX OIL PUMP FILTER DIFFERENTIAL PRESSURE	PSIG	X								X			X	
[5]	QT (F)	AC–12	COMPRESSOR HOURS (HUNDREDS)	HRS	X								X			X	
[5]	QT (F)	AC–12	COMPRESSOR HOURS (THOUSANDS)	HRS	X								X			X	
[5]	(F)	AC–12	COAST DOWN TIME REMAINING	SEC	X								X			X	
[5]	(F)	AC–12	SYSTEM PRESSURE SET POINT (READ ONLY)	PSIG	X								X			X	
[5]	(F)	AC–12	SYSTEM PRESSURE SET POINT (REMOTE WRITE ONLY)	PSIG		X										X	
[5]	(F)	AC–12	REMOTE/LOCAL MODE INDICATION					X								X	SELECT MODE
[5]	YC (F)	AC–12	REMOTE START (REMOTE MODE ONLY)					X								X	MOMENTARY PULSE
[5]	YC (F)	AC–12	REMOTE STOP (REMOTE MODE ONLY)					X								X	MAINTAINED STOP
[5]	(F)	AC–12	REMOTE LOAD (REMOTE MODE ONLY)					X								X	
[5]	(F)	AC–12	REMOTE UNLOAD (REMOTE MODE ONLY)					X								X	
[5]	YC (F)	AC–12	MOTOR CONTROL CENTER SOFT STARTER STATUS				X									X	
[5]	(F)	AC–12	START PB STATUS										X			X	[6]
[5]	(F)	AC–12	LOAD PB STATUS										X			X	[7]
[5]	(F)	AC–12	STOP PB STATUS				X									X	OFF / STOP
[5]	(F)	AC–12	UNLOAD PB STATUS				X									X	UNLOAD / UNLOADED
[5]	(F)	AC–12	PROCESSOR FAULT STATUS				X									X	
[5]	(F)	AC–12	PROCESSOR FAULT DESCRIPTION				X									X	
[5]	(F)	AC–12	COMMUNICATION VERIFICATION				X									X	

LEGEND:

FILENAME: CONTROL POINTS MATRIX 2 – PLC.XLS

X = PROVIDE SELECTED CONTROL POINT OR FUNCTION
HMI = HUMAN MACHINE INTERFACE
PLC = PROGRAMMABLE LOGIC CONTROLLER
(F) = FURNISHED WITH EQUIPMENT
(E) = EXISTING EQUIPMENT
CCW(S&R) = COMPRESSOR COOLING WATER (SUPPLY & RETURN)

NOTES:

[1] PROVIDE PROGRAMMING AND GRAPHICS UTILIZING THE EXISTING MASTER B818 PLC AND HMI WITH PROGRAMMING PRODUCED USING ALLEN–BRADLEY (A–B) FACTORY–TALK (A–B REGISTERED TRADEMARK). THE EXISTING PLC AND HMI ARE LOCATED ON THE MEZZANINE LEVEL, EAST WALL, OF B818 NEAR GRIDS 1.25–E
[2] ALL SETPOINTS PROGRAMMED INTO THE SYSTEM MUST BE TREND CAPABLE, OVERRIDE CAPABLE, AND SHOWN ON GRAPHICS
[3] PROVIDE CABLING BETWEEN EQUIPMENT AND THE EXISTING MASTER B818 PLC.
[4] PROVISIONS FOR FUTURE AIR COMPRESSOR AC–14, AIR DRYER AD–14, AND FLUID COOLER FC–3 ARE NOT REQUIRED UNLESS INDICATED OTHERWISE.
[5] PROVIDED BY MANUFACTURER
[6] STATUS IS NOT READY, START, RUNNING, COAST DOWN TIME REMAINING, POWER OFF
[7] STATUS IS LOAD, LOADING, LOADED, UNLOADING

PLC CONTROL POINTS MATRIX

DEVICE NUMBER	DEVICE IDENTITY	SERVES	DESCRIPTION	UNITS	ANALOG INPUT (AI)	ANALOG OUTPUT (AO)	DIGITAL INPUT (DI)	DIGITAL OUTPUT (DO)	HI ALARM	HI FAULT	LO ALARM	LO FAULT	TRENDING	OVERRIDE	TOTALIZE	GRAPHICS	COMMENTS
			CENTRIFUGAL AIR COMPRESSSORS														
1309	PT (F)	AC–13	MACHINE DISCHARGE AIR PRESSURE	PSIG	X				X	X			X			X	
[5]	FCV (F)	AC–13	OA COMPRESSOR INLET VANES	%	X								X			X	% VANES OPEN
1305	FCV (F)	AC–13	COMPRESSED AIR BLOW OFF CONTROL VALVE	%	X								X			X	% VALVE CLOSED
1310	FCV (F)	AC–13	COMPRESSED AIR BLOCK CONTROL VALVE				X						X			X	2–POSITION VALVE
[5]	TT (F)	AC–13	OIL TEMPERATURE	DEG F					X	X	X	X	X			X	
1308	TT (F)	AC–13	MACHINE DISCHARGE AIR TEMPERATURE	DEG F	X				X	X	X	X	X			X	
[5]	PT (F)	AC–13	OIL PRESSURE	PSIG					X	X	X	X	X			X	
[5]	IY (F)	AC–13	MOTOR CURRENT	AMPS	X				X	X	X	X	X		X	X	CALCULATE KWH TO TOTALIZE
[5]	VT (F)	AC–13	STAGE 1 VIBRATION	MILS					X	X	X	X	X			X	
[5]	VT (F)	AC–13	STAGE 2 VIBRATION	MILS					X	X	X	X	X			X	
[5]	VT (F)	AC–13	STAGE 3 VIBRATION	MILS					X	X	X	X	X			X	
[5]	TT (F)	AC–13	STAGE 1 AIR TEMPERATURE	DEG F					X	X	X	X	X			X	
[5]	TT (F)	AC–13	STAGE 2 AIR TEMPERATURE	DEG F					X	X	X	X	X			X	
[5]	TT (F)	AC–13	STAGE 3 AIR TEMPERATURE	DEG F					X	X	X	X	X			X	
[5]	PT (F)	AC–13	STAGE 1 AIR PRESSURE	PSIG					X	X	X	X	X			X	
[5]	PT (F)	AC–13	STAGE 2 AIR PRESSURE	PSIG					X	X	X	X	X			X	
[5]		AC–13	STAGE 3 AIR PRESSURE	PSIG													SAME AS 1209
[5]	VT (F)	AC–13	BULLGEAR VIBRATION	MILS					X	X	X	X	X			X	
[5]	TT (F)	AC–13	WINDING TEMPERATURE A	DEG F					X	X	X	X	X			X	
[5]	TT (F)	AC–13	WINDING TEMPERATURE B	DEG F					X	X	X	X	X			X	
[5]	TT (F)	AC–13	WINDING TEMPERATURE C	DEG F					X	X	X	X	X			X	
[5]	TT (F)	AC–13	INBOARD BEARING TEMPERATURE	DEG F					X	X	X	X	X			X	
1306	TT (F)	AC–13	CCWS WATER TEMPERATURE IN	DEG F	X				X	X	X	X	X			X	
1307	TT (F)	AC–13	CCWR WATER TEMPERATURE OUT	DEG F	X				X	X	X	X	X			X	
[5]	(F)	AC–13	ALARM INDICATION				X						X			X	
[5]	(F)	AC–13	FAULT INDICATION				X						X			X	
[5]	(F)	AC–13	ALARM AND/OR FAULT INDICATION				X									X	
[5]	(F)	AC–13	COMPRESSOR READY TO START				X									X	
[5]	YY (F)	AC–13	COOLING FLOW (ON/OFF STATUS)				X						X			X	
[5]	YC (F)	AC–13	AUXILIARY OIL PUMP (ON/OFF STATUS)				X						X			X	
[5]	(F)	AC–13	AUX OIL PUMP FILTER DIFFERENTIAL PRESSURE	PSIG	X								X			X	
[5]	QT (F)	AC–13	COMPRESSOR HOURS (HUNDREDS)	HRS	X								X			X	
[5]	QT (F)	AC–13	COMPRESSOR HOURS (THOUSANDS)	HRS	X								X			X	
[5]	(F)	AC–13	COAST DOWN TIME REMAINING	SEC	X								X			X	
[5]	(F)	AC–13	SYSTEM PRESSURE SET POINT (READ ONLY)	PSIG	X								X			X	
[5]	(F)	AC–13	SYSTEM PRESSURE SET POINT (REMOTE WRITE ONLY)	PSIG		X										X	
[5]	(F)	AC–13	REMOTE/LOCAL MODE INDICATION					X								X	SELECT MODE
[5]	YC (F)	AC–13	REMOTE START (REMOTE MODE ONLY)					X								X	MOMENTARY PULSE
[5]	YC (F)	AC–13	REMOTE STOP (REMOTE MODE ONLY)					X								X	MAINTAINED STOP
[5]	(F)	AC–13	REMOTE LOAD (REMOTE MODE ONLY)					X								X	
[5]	(F)	AC–13	REMOTE UNLOAD (REMOTE MODE ONLY)					X								X	
[5]	YC (F)	AC–13	MOTOR CONTROL CENTER SOFT STARTER STATUS				X									X	
[5]	(F)	AC–13	START PB STATUS										X			X	[6]
[5]	(F)	AC–13	LOAD PB STATUS										X			X	[7]
[5]	(F)	AC–12	STOP PB STATUS				X									X	OFF / STOP
[5]	(F)	AC–12	UNLOAD PB STATUS				X									X	UNLOAD / UNLOADED
[5]	(F)	AC–12	PROCESSOR FAULT STATUS				X									X	
[5]	(F)	AC–12	PROCESSOR FAULT DESCRIPTION				X									X	
[5]	(F)	AC–12	COMMUNICATION VERIFICATION				X									X	

LEGEND:

FILENAME: CONTROL POINTS MATRIX 3 – PLC.XLS

X = PROVIDE SELECTED CONTROL POINT OR FUNCTION
HMI = HUMAN MACHINE INTERFACE
PLC = PROGRAMMABLE LOGIC CONTROLLER
(F) = FURNISHED WITH EQUIPMENT
(E) = EXISTING EQUIPMENT
CCW(S&R) = COMPRESSOR COOLING WATER (SUPPLY & RETURN)

NOTES:

[1] PROVIDE PROGRAMMING AND GRAPHICS UTILIZING THE EXISTING MASTER B818 PLC AND HMI WITH PROGRAMMING PRODUCED USING ALLEN–BRADLEY (A–B) FACTORY–TALK (A–B REGISTERED TRADEMARK). THE EXISTING PLC AND HMI ARE LOCATED ON THE MEZZANINE LEVEL, EAST WALL, OF B818 NEAR GRIDS 1.25–E
[2] ALL SETPOINTS PROGRAMMED INTO THE SYSTEM MUST BE TREND CAPABLE, OVERRIDE CAPABLE, AND SHOWN ON GRAPHICS
[3] PROVIDE CABLING BETWEEN EQUIPMENT AND THE EXISTING MASTER B818 PLC.
[4] PROVISIONS FOR FUTURE AIR COMPRESSOR AC–14, AIR DRYER AD–14, AND FLUID COOLER FC–3 ARE NOT REQUIRED UNLESS INDICATED OTHERWISE.
[5] PROVIDED BY MANUFACTURER
[6] STATUS IS NOT READY, START, RUNNING, COAST DOWN TIME REMAINING, POWER OFF
[7] STATUS IS LOAD, LOADING, LOADED, UNLOADING

SYM	DESCRIPTION	DATE	APPR
1	AMENDMENT 003	04-26-16	JVH

NAVFAC

LARRY D. SWARTZ STATE OF WASHINGTON 27501 REGISTERED PROFESSIONAL ENGINEER
01/27/16 SEAL

notkin mechanical engineers
www.notkin.com
telephone: 206.448.1911
facsimile: 206.448.9485
2301 5th Avenue, Suite 401
Seattle, WA 98121

Contact: Larry Swartz, P.E.
notkin#: 215031
A/E INFO

APPROVED
FOR COMMANDER NAVFAC
ACTIVITY
SATISFACTORY TO DATE

DES CF DRW KH CHK LDS
PM/DM: J. SHEPARD/L. ANDERSEN
BRANCH MANAGER: K. PAULSON
CHIEF ENG/ARCH: B. GALLOWAY
FIRE PROTECTION: B. NIXON

DEPARTMENT OF THE NAVY
NAVAL FACILITIES ENGINEERING COMMAND
NAVAL FACILITIES ENGINEERING COMMAND ~ NORTHWEST
NAVAL BASE KITSAP – PSNS & IMF
BREMERTON, WA
NAVAL STATION – SILVERDALE, WASHINGTON
IPT
FY-16 MCON PROJECT P-431
DD-6 MODERNIZATION & UTILITY SITE IMPROVEMENTS
CONTROL POINTS MATRIX

SCALE: AS NOTED
EPROJECT NO.: 1355285
CONSTR. CONTR. NO. N44255–XX–X–XXXX
NAVFAC DRAWING NO./PWD NO. 16034611/80865
SHEET 159 OF 248
M-802

DRAWFORM REVISION: 10 MARCH 2009

GENERAL NOTES:

1. SEE PLANS M-121, M-122, AND M-123 FOR PIPE SIZES.

SHEET KEYNOTES:

1. EXISTING MASTER B818 PLC AND HMI ARE LOCATED ON THE MEZZANINE LEVEL OF B818, ON THE WEST WALL NEAR GRIDS 1.25 AND E.
2. FOR ADDITIONAL INSTRUMENTATION, SEE A4/M-501
3. FOR ADDITIONAL INSTRUMENTATION, SEE B4/M-502
4. FOR ADDITIONAL INSTRUMENTATION, SEE C2/M-502
5. FOR ADDITIONAL INSTRUMENTATION, SEE C1/M-502
6. FOR ADDITIONAL INSTRUMENTATION, SEE A1/M-501
7. FOR ADDITIONAL INSTRUMENTATION, SEE C4/M-501

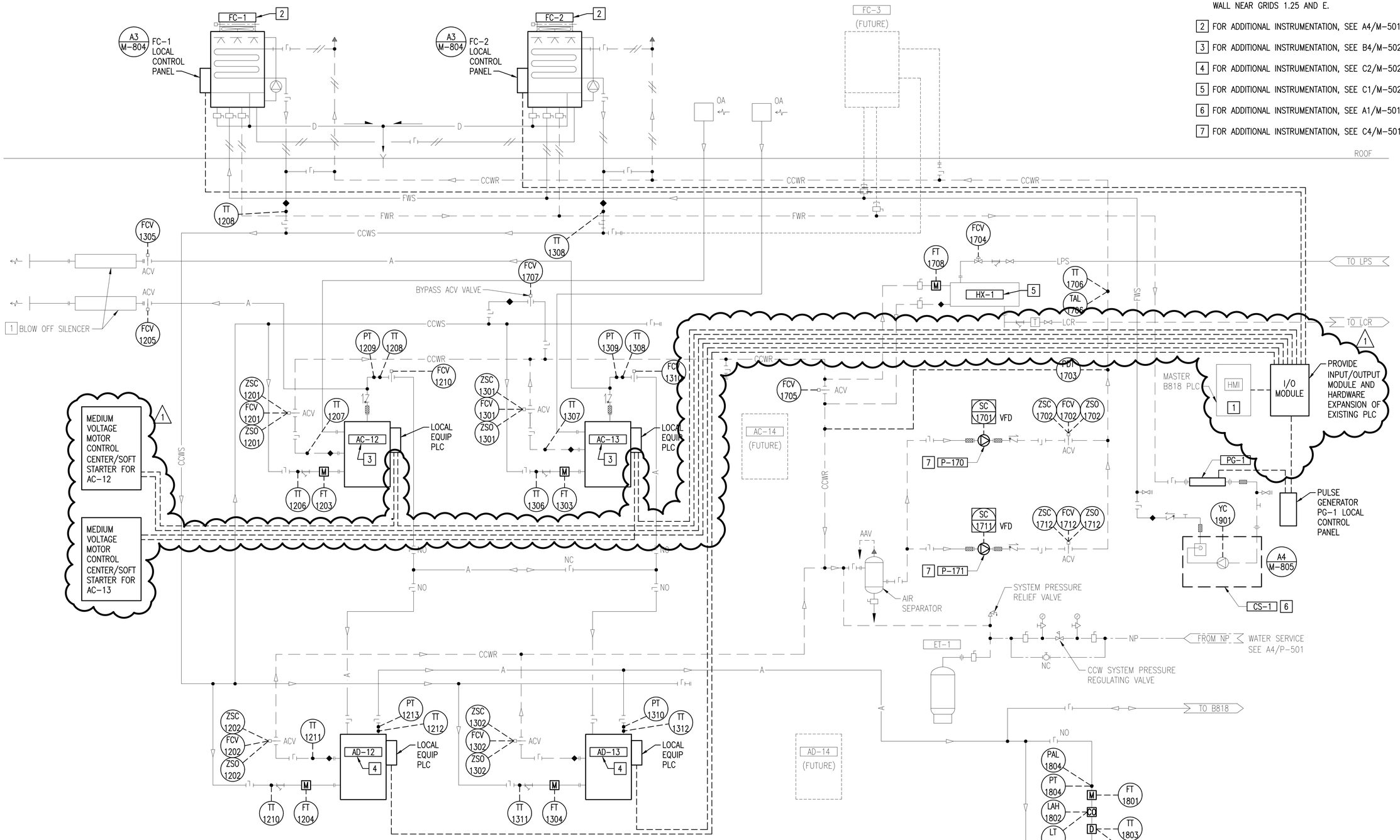

COMPRESSED AIR SYSTEM PROCESS & INSTRUMENTATION DIAGRAM (A1)

SCALE: NONE

SYM	DESCRIPTION	DATE	APPR
1	AMENDMENT 003	04-26-16	JVH

NAVFAC

LARRY D. SWARTZ — STATE OF WASHINGTON — 27501 — REGISTERED PROFESSIONAL ENGINEER — 01/27/16 — SEAL

notkin mechanical engineers
www.notkin.com
telephone: 206.448.1911
facsimile: 206.448.9485
2301 5th Avenue, Suite 401
Seattle, WA 98121

Contact: Larry Swartz, P.E.
notkin#: 215031
A/E INFO

APPROVED

FOR COMMANDER NAVFAC

ACTIVITY

SATISFACTORY TO DATE

DES: CF DRW: KH CHK: LDS

PM/DM: J. SHEPARD/L. ANDERSEN

BRANCH MANAGER: K. PAULSON

CHIEF ENG/ARCH: B. GALLOWAY

FIRE PROTECTION: B. NIXON

DEPARTMENT OF THE NAVY
NAVAL FACILITIES ENGINEERING COMMAND
NAVAL FACILITIES ENGINEERING COMMAND ~ NORTHWEST
NAVAL STATION – SILVERDALE, WASHINGTON
NAVAL BASE KITSAP – PSNS & IMF
BREMERTON, WA

FY-16 MCON PROJECT P-431
DD-6 MODERNIZATION & UTILITY SITE IMPROVEMENTS

COMPRESSED AIR SYSTEM P&ID

SCALE: AS NOTED
EPROJECT NO.: 1355285
CONSTR. CONTR. NO.: N44255-XX-X-XXXX
NAVFAC DRAWING NO./PWO NO.: 16034612/80866
SHEET 160 OF 248

M-803

DRAWFORM REVISION: 10 MARCH 2009

GENERAL NOTES:

1. FOR SYMBOLS AND ABBREVIATIONS REFER TO SHEET E-001 & E-002.

SHEET KEYNOTES:

1. PROVIDE 15KV VACUUM CIRCUIT BREAKER AND SWITCHGEAR SECTION. ALIGN HORIZONTAL BUS WITH EXISTING ITE 15-HK-500 SWITCHGEAR BUS.
2. PROVIDE NEW INDUSTRIAL POWER SUBSTATION 84A.
3. PROVIDE OVERHEAD ROUTE FROM NEW SWITCHGEAR SECTION CIRCUIT 4098-84 TO NEW SUBSTATION 84A.
4. PROVIDE OVERHEAD ROUTE, CONTROL WIRING, AND NEW SCADA WIRING TO EXISTING SCADA CABINET.
5. INTERCEPT AND EXTEND BORED DUCTS THROUGH ELECTRICAL TUNNEL WALL.
6. CONNECT SUMP FLOAT SWITCH TO SCADA. SEE SHEET E-604. (1)

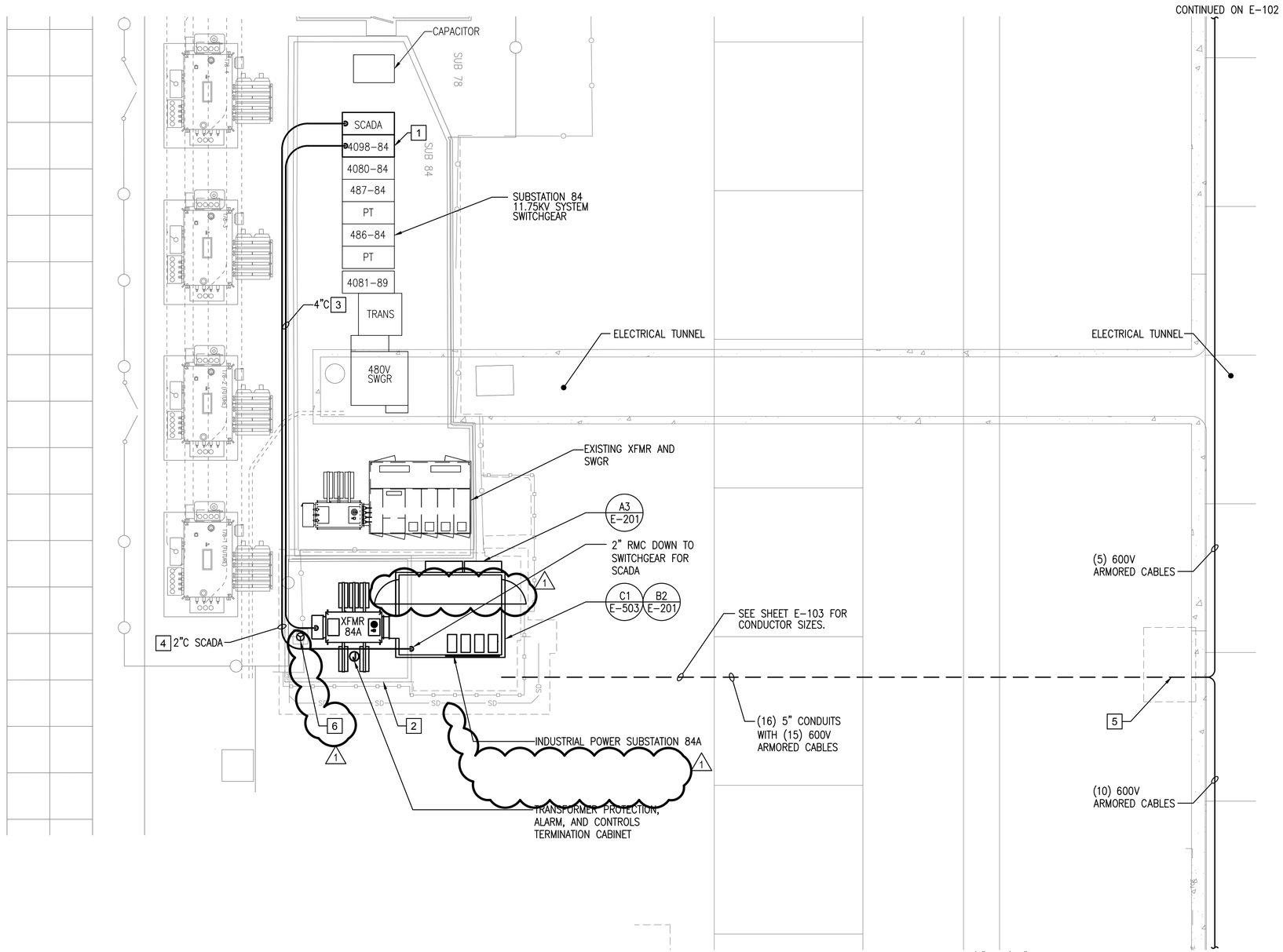

ENLARGED SUBSTATIONS 84 AND 84A

SCALE: 1/8" = 1'-0"

E-103 A1

1/8" = 1'-0"

0 4 8 16 24

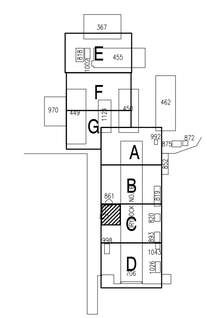

KEY PLAN

SCALE: NONE

SYM	DESCRIPTION	DATE	APPR
1	AMENDMENT 003	04-26-16	DES

NAVFAC

DOUGLAS C. BUSHNELL, STATE OF WASHINGTON, 40923, REGISTERED PROFESSIONAL ENGINEER, SEAL

Wood Harbinger
3009 112th Ave NE, Suite 100
Bellevue WA 98004
425.628.6000
woodharbinger.com
A/E INFO

APPROVED

FOR COMMANDER NAVFAC

ACTIVITY

SATISFACTORY TO DATE

DES DES DRW CN CHK DCB

PM/DM: J. SHEPARD/L. ANDERSEN

BRANCH MANAGER: S. TEICHMANN

CHIEF ENG/ARCH: B. GALLOWAY

FIRE PROTECTION: B. NIXON

DEPARTMENT OF THE NAVY
NAVAL FACILITIES ENGINEERING COMMAND
NAVAL FACILITIES ENGINEERING COMMAND ~ NORTHWEST
NAVAL STATION - SILVERDALE, WASHINGTON
NAVAL BASE KITSAP – PSNS & IMF
BREMERTON, WA

FY-16 MCON PROJECT P-431
DD-6 MODERNIZATION & UTILITY SITE IMPROVEMENTS

ENLARGED SUBSTATIONS 84 AND 84A

SCALE: 1/8"=1'-0"

EPROJECT NO.: 1355285

CONSTR. CONTR. NO.: N44255-XX-X-XXXX

NAVFAC DRAWING NO./PWD NO.: 16034657/80911

SHEET 205 OF 248

E-401

DRAWFORM REVISION: 10 MARCH 2009

FILE NAME: G:\2010\10090\05 P431 DD6\DWG\E\80911_E-401.dwg LAYOUT NAME: 80911_E-401 PLOTTED: Wednesday, March 02, 2016 - 8:36am USER: cnelson

GENERAL NOTES:

1. FOR SYMBOLS AND ABBREVIATIONS REFER TO SHEET E-001 & E-002.

SHEET KEYNOTES:

1. 5-INCH CONDUIT AND DIRECTIONALLY BORED DUCTS FROM EXISTING 15KV SWITCHGEAR IN SUBSTATION 83 VAULT TO NEW INDUSTRIAL POWER SUBSTATIONS 83A AND 83B.
2. INDUSTRIAL POWER SUBSTATIONS 83A AND 83B.
3. 4-INCH CONDUIT AND DIRECTIONALLY BORED DUCT FROM EXISTING SCADA AND COMM IN SUBSTATION 83 VAULT TO NEW LOW VOLTAGE SWITCHGEAR.
4. INTERCEPT AND EXTEND BORED DUCTS THROUGH ELECTRICAL TUNNEL WALL.
5. CONNECT SUMP FLOAT SWITCH TO SCADA. SEE SHEET E-614.

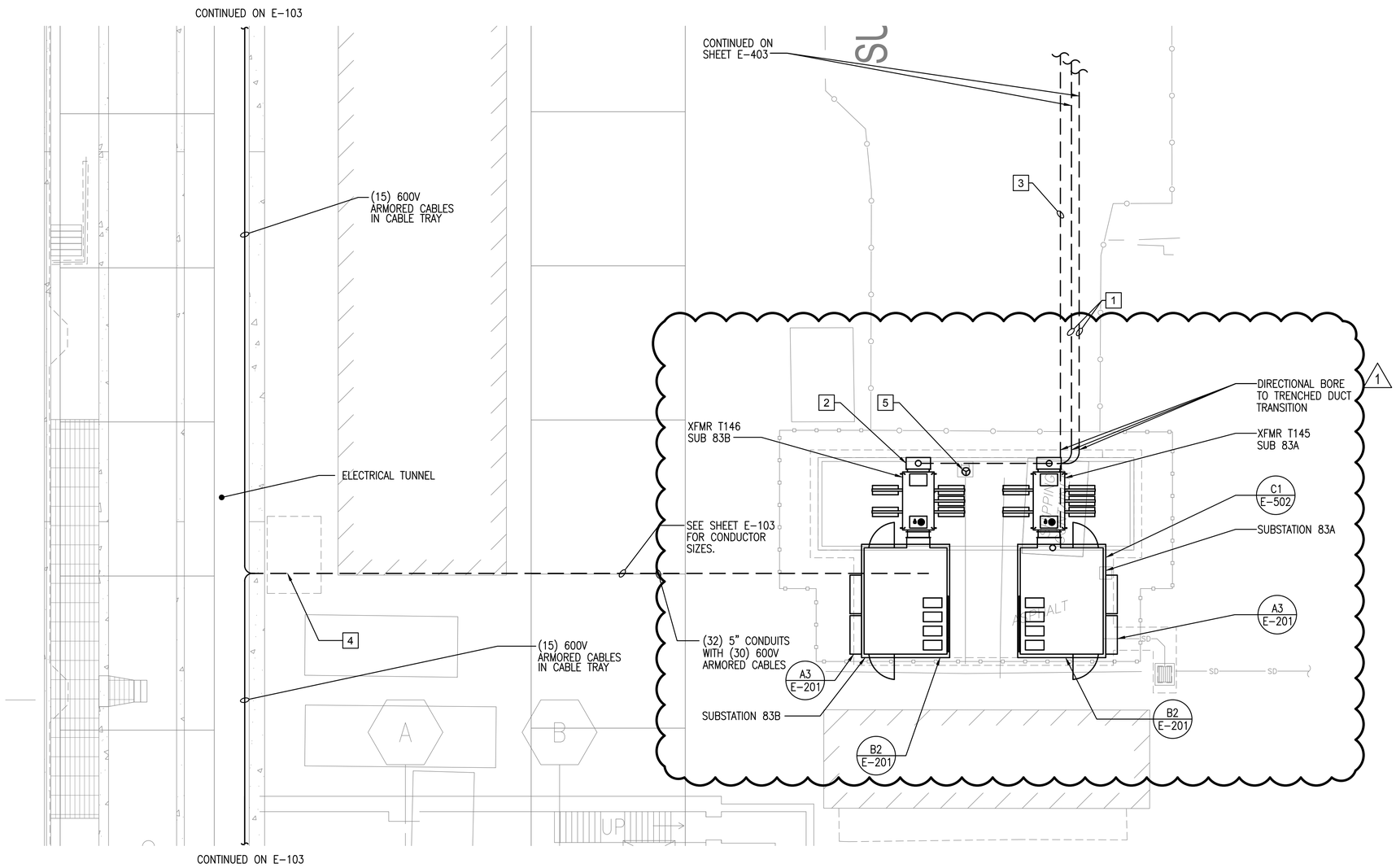

ENLARGED SUBSTATIONS 83A AND 83B

SCALE: 1/8" = 1'-0"

E-103 A1

1/8" = 1'-0"

0 4 8 16 24

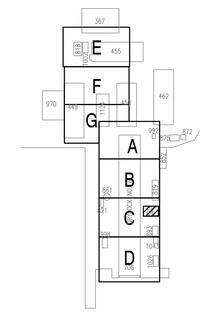

KEY PLAN

SCALE: NONE

STM	DESCRIPTION	DATE	APPR
1	AMENDMENT 003	04-26-16	DES

NAVFAC

DOUGLAS C. BUSHARD, STATE OF WASHINGTON, 40923, REGISTERED PROFESSIONAL ENGINEER — SEAL

Wood Harbinger
3009 112th Ave NE, Suite 100
Bellevue WA 98004
425.628.6000
woodharbinger.com
A/E INFO

APPROVED

FOR COMMANDER NAVFAC

ACTIVITY

SATISFACTORY TO DATE

DES DES DRW CN CHK DCB

PM/DM: J. SHEPARD/L. ANDERSEN

BRANCH MANAGER: S. TEICHMANN

CHIEF ENG/ARCH: B. GALLOWAY

FIRE PROTECTION: B. NIXON

DEPARTMENT OF THE NAVY
NAVAL FACILITIES ENGINEERING COMMAND
BY NAVAL FACILITIES ENGINEERING COMMAND ~ NORTHWEST
NAVAL STATION - SILVERDALE, WASHINGTON

NAVAL BASE KITSAP – PSNS & IMF
BREMERTON, WA

FY-16 MCON PROJECT P-431
DD-6 MODERNIZATION & UTILITY SITE IMPROVEMENTS

ENLARGED SUBSTATIONS 83A AND 83B

SCALE: 1/8" = 1'-0"

EPROJECT NO.: 1355285

CONSTR. CONTR. NO.: N44255-XX-X-XXXX

NAVFAC DRAWING NO./PWD NO.: 16034658/80912

SHEET 206 OF 248

E-402

DRAWFORM REVISION: 10 MARCH 2009

FILE NAME: G:\2010\10090\DG P431 DD6\DWG\E\80912_E-402.dwg LAYOUT NAME: 80912_E-402 PLOTTED: Wednesday, March 02, 2016 - 8:36am USER: cnelson

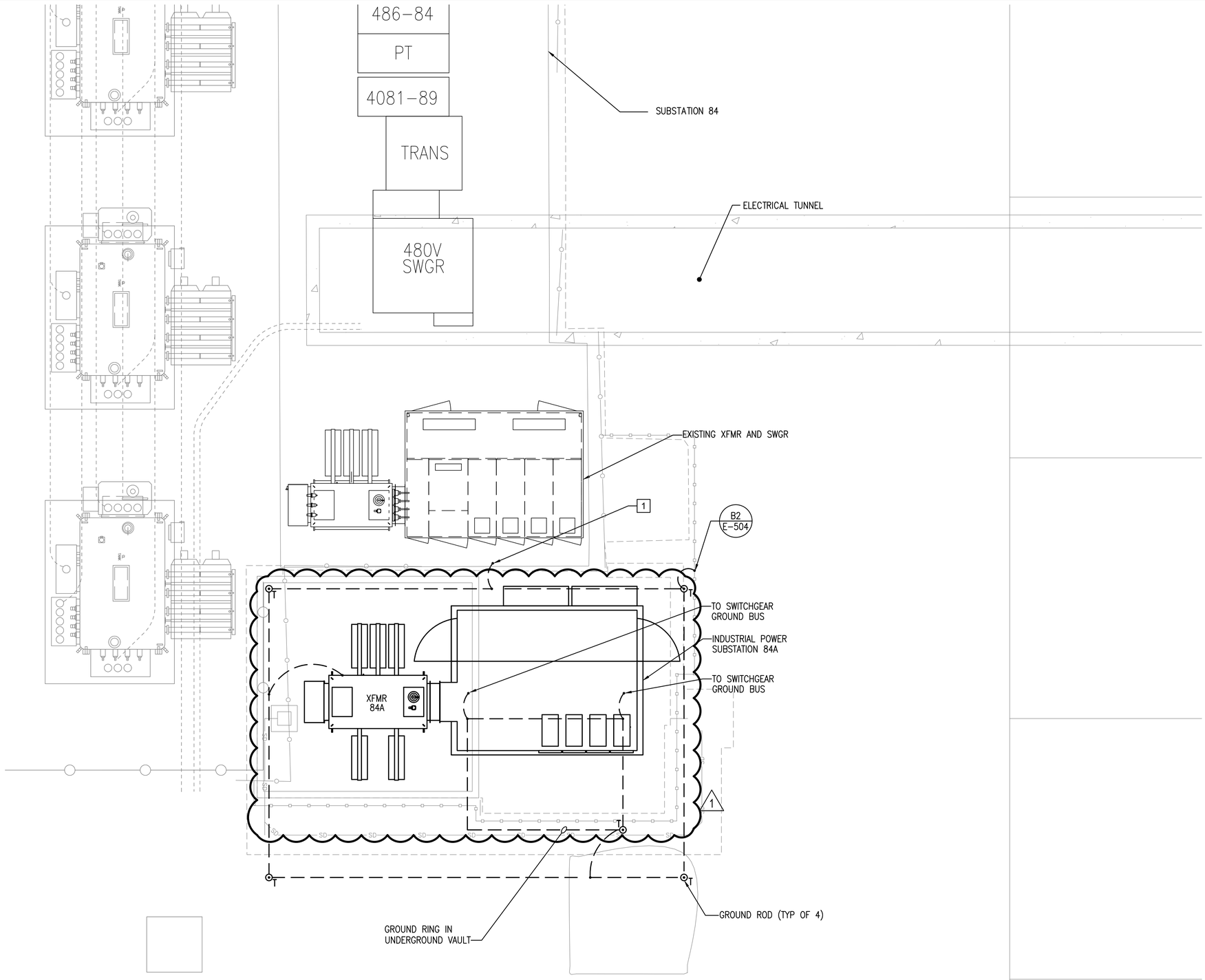

SUBSTATIONS 84 AND 84A - GROUNDING

SCALE: 1/4" = 1'-0"

E-103 A1

GENERAL NOTES:

1. FOR SYMBOLS AND ABBREVIATIONS REFER TO SHEET E-001 & E-002.
2. PROVIDE #4/0 AWG FOR ALL GROUNDING AND BONDING CONDUCTORS UNLESS OTHERWISE NOTED.

SHEET KEYNOTES:

1 BOND NEW SUBSTATION GROUND TO EXISTING SUBSTATION 84 GROUND.

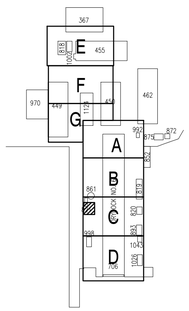

1/4" = 1'-0"

0 2 4 8 12

KEY PLAN

SCALE: NONE

STM	DESCRIPTION	DATE	APPR
1	AMENDMENT 003	04-26-16	DES

NAVFAC

DOUGLAS C. BUSHARD, STATE OF WASHINGTON, 40923, REGISTERED PROFESSIONAL ENGINEER, SEAL

Wood Harbinger
3009 112th Ave NE, Suite 100
Bellevue WA 98004
425.628.6000
woodharbinger.com
A/E INFO

APPROVED

FOR COMMANDER NAVFAC

ACTIVITY

SATISFACTORY TO DATE

DES DES DRW CN CHK DCB

PM/DM: J. SHEPARD/L. ANDERSEN

BRANCH MANAGER: S. TEICHMANN

CHIEF ENG/ARCH: B. GALLOWAY

FIRE PROTECTION: B. NIXON

DEPARTMENT OF THE NAVY
NAVAL FACILITIES ENGINEERING COMMAND
NAVAL FACILITIES ENGINEERING COMMAND – NORTHWEST
NAVAL STATION – SILVERDALE, WASHINGTON
NAVAL BASE KITSAP – PSNS & IMF
BREMERTON, WA

FY-16 MCON PROJECT P-431
DD-6 MODERNIZATION & UTILITY SITE IMPROVEMENTS

SUBSTATIONS 84 AND 84A – GROUNDING

SCALE: 1/4"=1'-0"

EPROJECT NO.: 1355285

CONSTR. CONTR. NO. N44255-XX-X-XXXX

NAVFAC DRAWING NO./PWD NO. 16034660/80914

SHEET 208 OF 248

E-411

DRAWFORM REVISION: 10 MARCH 2009

FILE NAME: G:\2010\10090\DD P431 DD6\DWG\E\80914_E-411.dwg LAYOUT NAME: 80914_E-411 PLOTTED: Wednesday, March 02, 2016 - 8:35am USER: cnelson

GENERAL NOTES:

1. FOR SYMBOLS AND ABBREVIATIONS REFER TO SHEET E-001 & E-002.
2. PROVIDE #4/0 AWG FOR ALL GROUNDING AND BONDING CONDUCTORS UNLESS OTHERWISE NOTED.

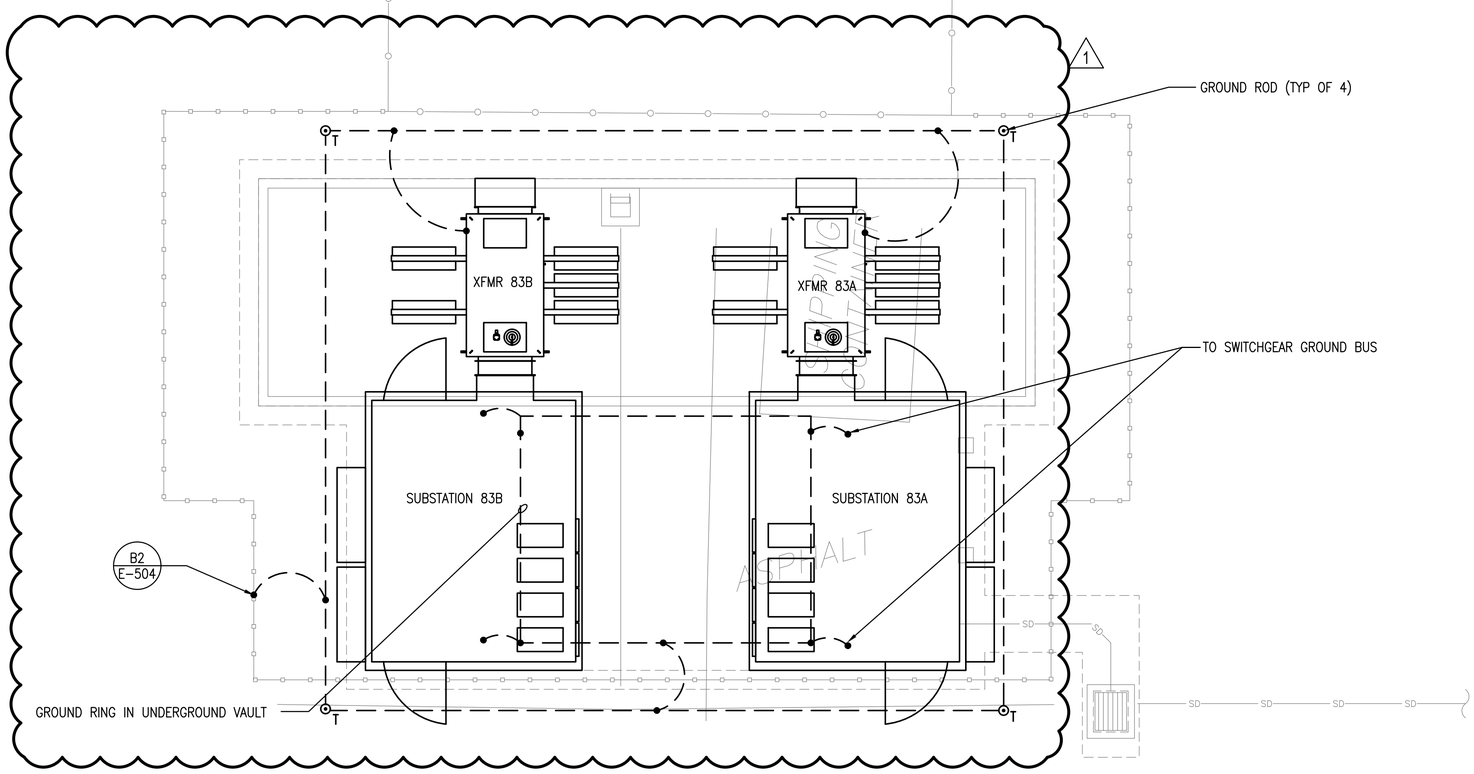

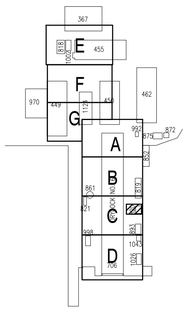

1/4" = 1'-0"

0 2 4 8 12

KEY PLAN

SCALE: NONE

SUBSTATIONS 83A AND 83B - GROUNDING

SCALE: 1/4" = 1'-0"

E-103 A1

STM	DESCRIPTION	DATE	APPR
1	AMENDMENT 003	04-26-16	DES

NAVFAC

DOUGLAS C. BUSHNELL — STATE OF WASHINGTON — 40923 — REGISTERED PROFESSIONAL ENGINEER — SEAL

Wood Harbinger
3009 112th Ave NE, Suite 100
Bellevue WA 98004
425.628.6000
woodharbinger.com
A/E INFO

APPROVED

FOR COMMANDER NAVFAC

ACTIVITY

SATISFACTORY TO DATE

DES DES DRW CN CHK DCB

PM/DM: J. SHEPARD/L. ANDERSEN

BRANCH MANAGER: S. TEICHMANN

CHIEF ENG/ARCH: B. GALLOWAY

FIRE PROTECTION: B. NIXON

DEPARTMENT OF THE NAVY
NAVAL FACILITIES ENGINEERING COMMAND
NAVAL FACILITIES ENGINEERING COMMAND ~ NORTHWEST
NAVAL STATION - SILVERDALE, WASHINGTON
NAVAL BASE KITSAP – PSNS & IMF
BREMERTON, WA

FY-16 MCON PROJECT P-431
DD-6 MODERNIZATION & UTILITY SITE IMPROVEMENTS

SUBSTATIONS 83A AND 83B – GROUNDING

SCALE: 1/4" = 1'-0"

EPROJECT NO.: 1355285

CONSTR. CONTR. NO.: N44255-XX-X-XXXX

NAVFAC DRAWING NO./PWD NO.: 16034661/80915

SHEET 209 OF 248

E-412

DRAWFORM REVISION: 10 MARCH 2009

FILE NAME: G:\2010\100960\05 P431 DD6\DWG\E\80915_E-412.dwg LAYOUT NAME: 80915_E-412 PLOTTED: Wednesday, March 02, 2016 - 8:36am USER: cnelson

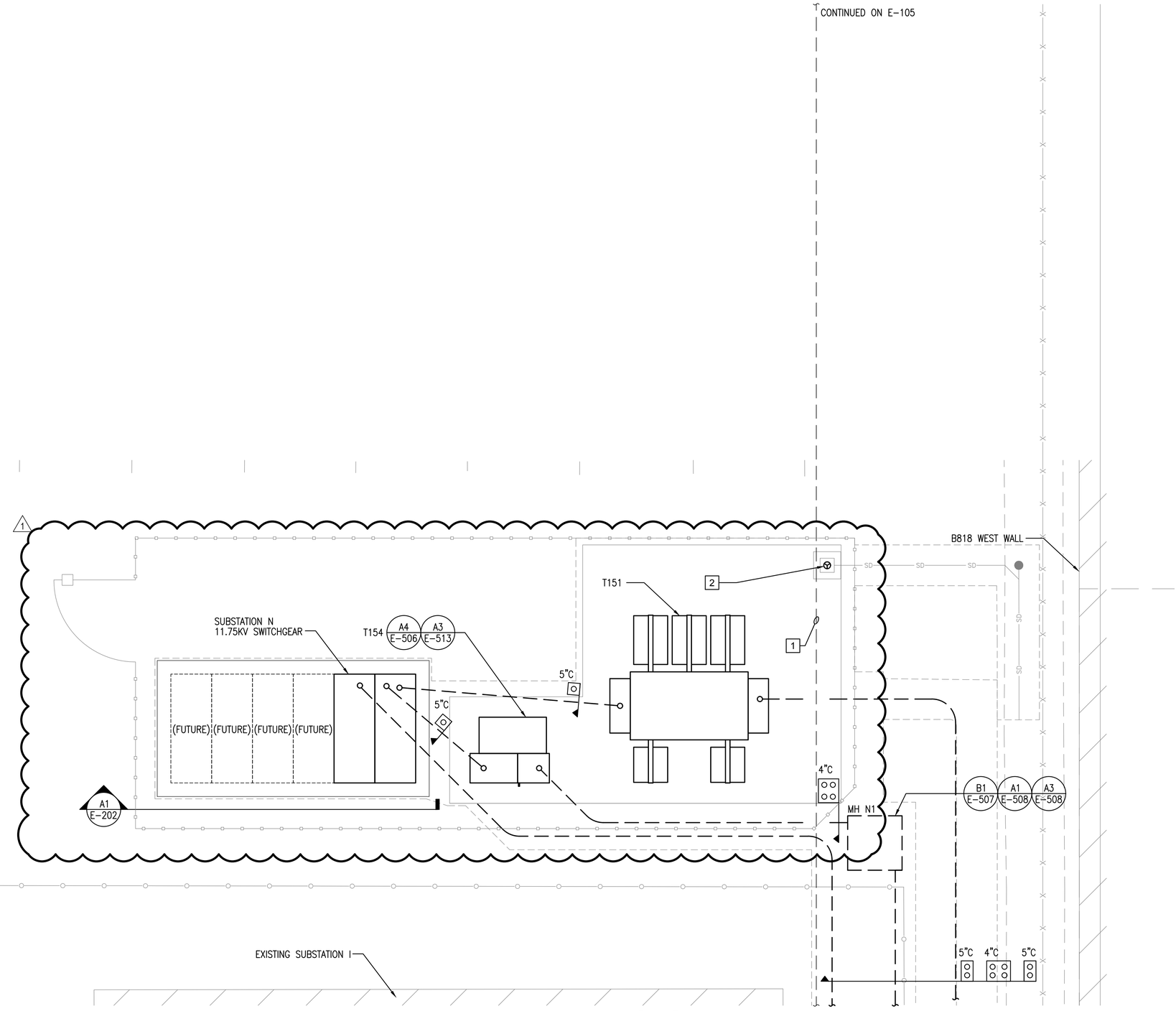

ENLARGED SUBSTATION N PLAN - AREA E

SCALE: 1/4"=1'-0"

E-105 A1

GENERAL NOTES:

1. FOR SYMBOLS AND ABBREVIATIONS REFER TO SHEET E-001 & E-002.

SHEET KEYNOTES:

1. EXISTING DUCTBANK FROM MH-813 TO MH-852P.
2. CONNECT SUMP FLOAT SWITCH TO SCADA. SEE SHEET E-624.

1/4" = 1'-0"

0 2 4 8 12

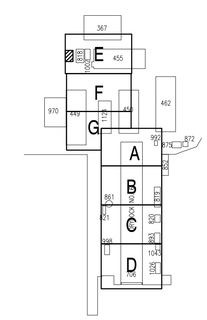

KEY PLAN

SCALE: NONE

STM	DESCRIPTION	DATE	APPR
1	AMENDMENT 003	04-26-16	DES

NAVFAC

DOUGLAS C. BUSHARD
STATE OF WASHINGTON
40923
REGISTERED
PROFESSIONAL ENGINEER
SEAL

Wood Harbinger
3009 112th Ave NE, Suite 100
Bellevue WA 98004
425.628.6000
woodharbinger.com
A/E INFO

APPROVED

FOR COMMANDER NAVFAC

ACTIVITY

SATISFACTORY TO DATE

DES DES DRW CN CHK DCB

PM/DM: J. SHEPARD/L. ANDERSEN

BRANCH MANAGER: S. TEICHMANN

CHIEF ENG/ARCH: B. GALLOWAY

FIRE PROTECTION: B. NIXON

DEPARTMENT OF THE NAVY
NAVAL FACILITIES ENGINEERING COMMAND
NAVAL FACILITIES ENGINEERING COMMAND – NORTHWEST
NAVAL BASE KITSAP – PSNS & IMF
NAVAL STATION – SILVERDALE, WASHINGTON
BREMERTON, WA

FY-16 MCON PROJECT P-431
DD-6 MODERNIZATION & UTILITY SITE IMPROVEMENTS

ENLARGED SUBSTATION N PLAN – AREA E

SCALE: 1/4"=1'-0"

EPROJECT NO.: 1355285

CONSTR. CONTR. NO. N44255-XX-X-XXXX

NAVFAC DRAWING NO./PWD NO. 16034662/80916

SHEET 210 OF 248

E-421

DRAWFORM REVISION: 10 MARCH 2009

FILE NAME: G:\2016\10980\05 P431 DD6\DWG\E\80916_E-421.dwg LAYOUT NAME: 80916_E-421 PLOTTED: Wednesday, March 02, 2016 - 8:36am USER: cnelson

GENERAL NOTES:

1. FOR SYMBOLS AND ABBREVIATIONS REFER TO SHEET E-001 & E-002.
2. PROVIDE #4/0 AWG FOR ALL GROUNDING AND BONDING CONDUCTORS UNLESS OTHERWISE NOTED.

SHEET KEYNOTES:

1 BOND NEW SUBSTATION GROUND TO EXISTING SUBSTATION GROUND.

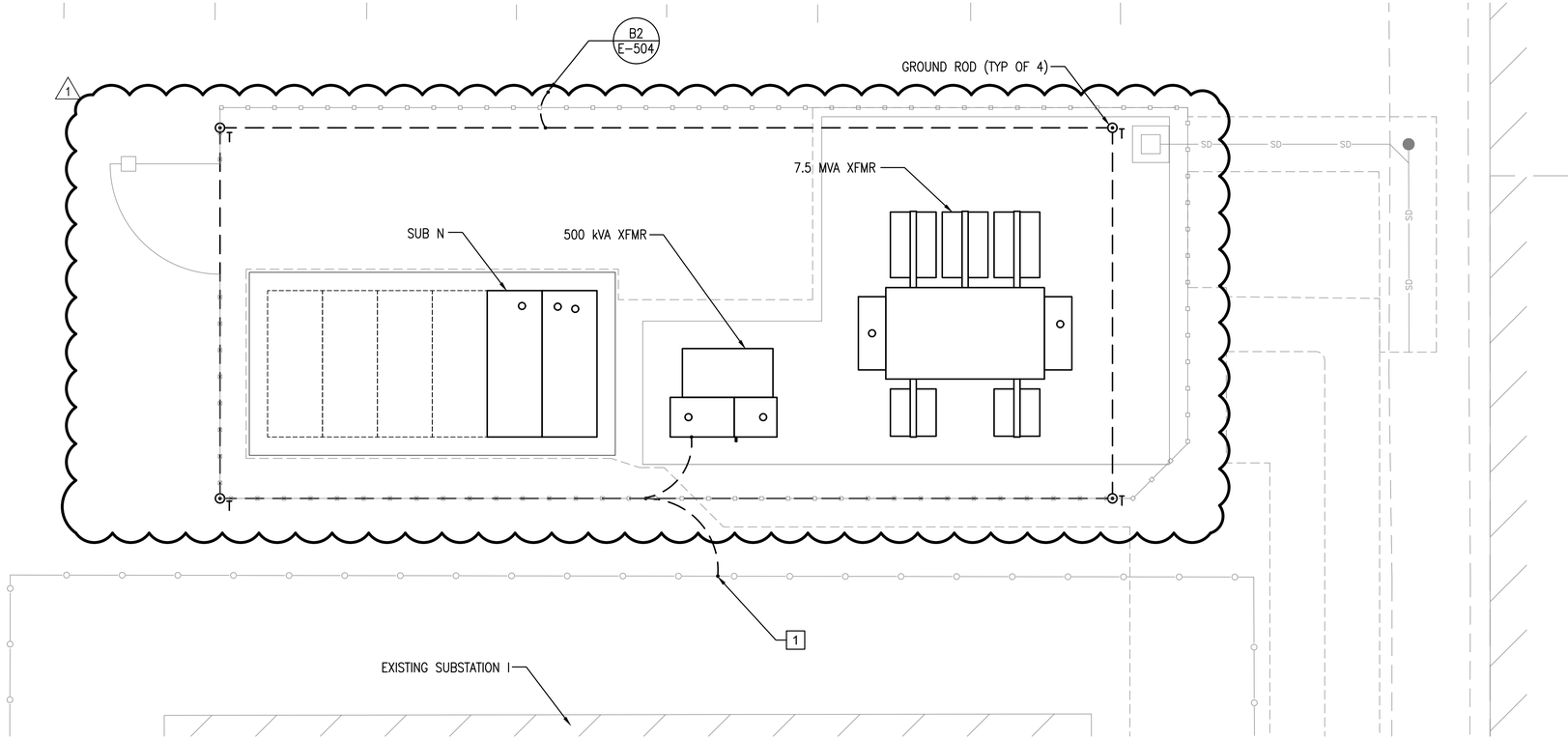

SUBSTATION N PLAN - GROUNDING

SCALE: 1/4"=1'-0"

E-105 A1

1/4" = 1'-0"

0 2 4 8 12

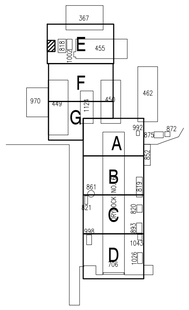

KEY PLAN

SCALE: NONE

STM	DESCRIPTION	DATE	APPR
1	AMENDMENT 003	04-26-16	DES

NAVFAC

DOUGLAS C. BUSHARD, STATE OF WASHINGTON, 40923, REGISTERED PROFESSIONAL ENGINEER, SEAL

Wood Harbinger
3009 112th Ave NE, Suite 100
Bellevue WA 98004
425.628.6000
woodharbinger.com
A/E INFO

APPROVED

FOR COMMANDER NAVFAC

ACTIVITY

SATISFACTORY TO DATE

DES DES DRW CN CHK DCB

PM/DM: J. SHEPARD/L. ANDERSEN

BRANCH MANAGER: S. TEICHMANN

CHIEF ENG/ARCH: B. GALLOWAY

FIRE PROTECTION: B. NIXON

DEPARTMENT OF THE NAVY
NAVAL FACILITIES ENGINEERING COMMAND
NAVAL FACILITIES ENGINEERING COMMAND – NORTHWEST
NAVAL BASE KITSAP – PSNS & IMF
NAVAL STATION – SILVERDALE, WASHINGTON
BREMERTON, WA

FY-16 MCON PROJECT P-431
DD-6 MODERNIZATION & UTILITY SITE IMPROVEMENTS

SUBSTATION N PLAN – GROUNDING

SCALE: 1/4"=1'-0"

EPROJECT NO.: 1355285

CONSTR. CONTR. NO. N44255-XX-X-XXXX

NAVFAC DRAWING NO./PWD NO. 16034664/80918

SHEET 212 OF 248

E-423

DRAWFORM REVISION: 10 MARCH 2009

FILE NAME: G:\2016\10090\05 P431 DD6\DWG\E\80918_E-423.dwg LAYOUT NAME: 80918_E-423 PLOTTED: Wednesday, March 02, 2016 - 8:36am USER: cnelson

GENERAL NOTES:

1. FOR SYMBOLS AND ABBREVIATIONS REFER TO SHEET E-001 & E-002.

SHEET KEYNOTES:

1. PROVIDE SERIAL FIBER COMMUNICATIONS TO EXISTING ADVANCED CONTROL SYSTEMS 7560 RTU. PROVIDE RS232 SERIAL COPPER TO MULTIMODE FIBER ADAPTERS AT EACH END. PROGRAM AND TEST RTU AND COMMUNICATIONS.
2. EXISTING SCADA CUBICLE. EXISTING RTU AND I/O TO REMAIN.

LINE LEGEND

NEW	EXISTING	
		EQUIPMENT OR SUBSTATION
		SCADA COMM TO BLDG 900
		STP COPPER CABLING
		DNP3 PROTOCOL OVER OPTICAL FIBER CABLING
		MODBUS PROTOCOL OVER COPPER SERIAL CABLING

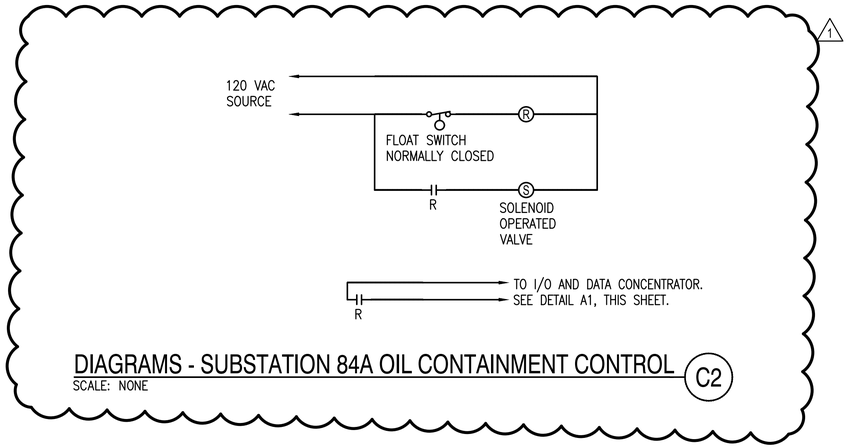

DIAGRAMS - SUBSTATION 84A OIL CONTAINMENT CONTROL (C2)
SCALE: NONE

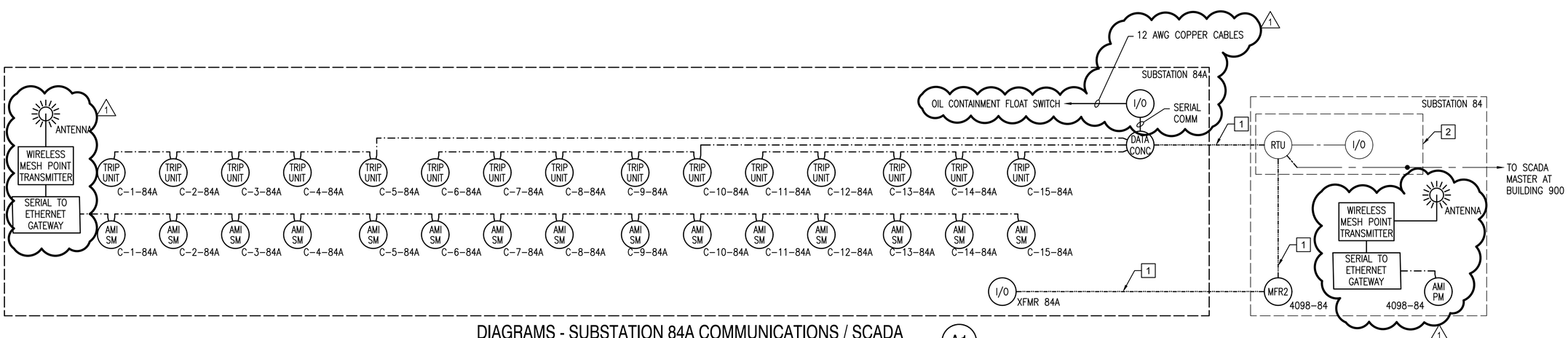

DIAGRAMS - SUBSTATION 84A COMMUNICATIONS / SCADA (A1)
SCALE: NONE

STM	DESCRIPTION	DATE	APPR
1	AMENDMENT 003	04-26-16	DES

NAVFAC

DOUGLAS C. BUSHARD — STATE OF WASHINGTON — 40923 — REGISTERED PROFESSIONAL ENGINEER — SEAL

Wood Harbinger
3009 112th Ave NE, Suite 100
Bellevue WA 98004
425.628.6000
woodharbinger.com
A/E INFO

APPROVED
FOR COMMANDER NAVFAC
ACTIVITY
SATISFACTORY TO DATE

DES DES | DRW CN | CHK DCB
PM/DM: J. SHEPARD/L. ANDERSEN
BRANCH MANAGER: S. TEICHMANN
CHIEF ENG/ARCH: B. GALLOWAY
FIRE PROTECTION: B. NIXON

DEPARTMENT OF THE NAVY
NAVAL FACILITIES ENGINEERING COMMAND
NAVAL FACILITIES ENGINEERING COMMAND ~ NORTHWEST
NAVAL STATION – SILVERDALE, WASHINGTON
BPT
NAVAL BASE KITSAP – PSNS & IMF
BREMERTON, WA
FY-16 MCON PROJECT P-431
DD-6 MODERNIZATION & UTILITY SITE IMPROVEMENTS
DIAGRAMS – SUBSTATION 84A COMMUNICATIONS / SCADA

SCALE: NTS
EPROJECT NO.: 1355285
CONSTR. CONTR. NO. N44255-XX-X-XXXX
NAVFAC DRAWING NO./PWO. NO. 16034683/80937
SHEET 231 OF 248
E-604

DRAWFORM REVISION: 10 MARCH 2009

FILE NAME: G:\2010\10090\05 P431 DD6\DWG\E\80937_E-604.dwg LAYOUT NAME: 80937_E-604 PLOTTED: Wednesday, March 02, 2016 – 8:35am USER: cnelson

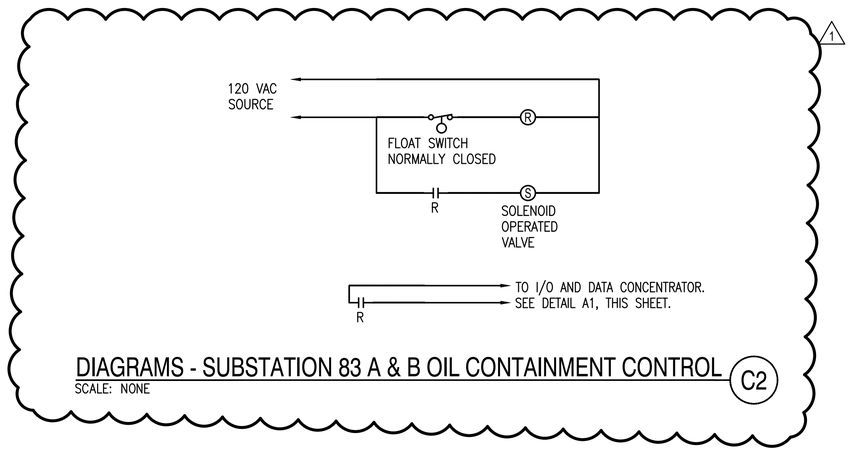

DIAGRAMS - SUBSTATION 83 A & B OIL CONTAINMENT CONTROL (C2)

SCALE: NONE

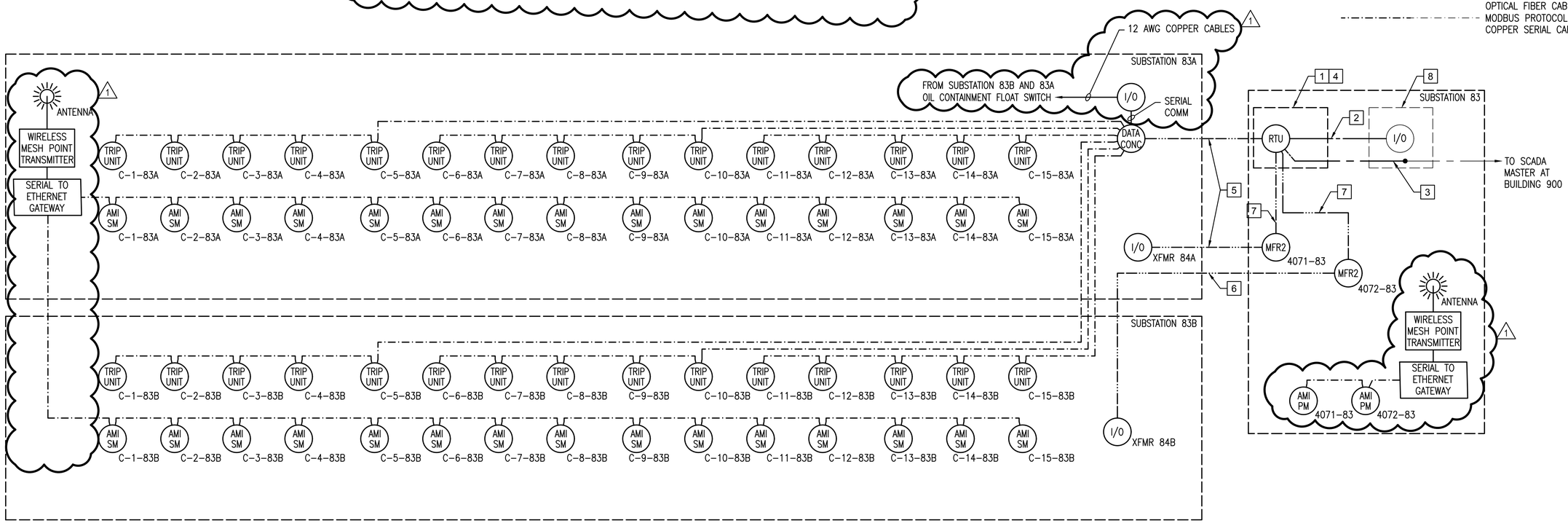

DIAGRAMS - SUBSTATION 83 A & B COMMUNICATIONS / SCADA (A1)

SCALE: NONE

GENERAL NOTES:

1. FOR SYMBOLS AND ABBREVIATIONS REFER TO SHEET E-001 & E-002.
2. WORK OF THIS SHEET UPGRADES EXISTING ADVANCED CONTROL SYSTEMS ACS-7050 RTU.

SHEET KEYNOTES:

1. PROVIDE NEW RTU CARD FILE, PATCH PANEL, WIRING, AND ENCLOSURE. PROGRAM AND TEST RTU.
2. EXTEND EXISTING I/O CIRCUITS TO NEW RTU. EXISTING RTU HAS FOUR ACS MODEL 070536 DIGITAL INPUT MODULES, TWO ACS MODEL 070535 ANALOG INPUT MODULES, AND SEVEN ACS MODEL 070543 RELAY MODULES.
3. EXTEND EXISTING SERIAL COMMUNICATIONS TO NEW RTU. PROGRAM NEW RTU FOR MODEM COMMUNICATIONS. MATCH EXISTING SETTINGS.
4. PROVIDE 10/100-BASE-T ETHERNET PORT FOR FUTURE CONNECTION.
5. PROVIDE 12-STRAND MULTIMODE FIBER CABLE. PROVIDE PATCH PANEL AT NEW RTU CABINET IN SUBSTATION 83 AND IN AUXILIARY CABINET OF SUBSTATION 83A. TERMINATE SPARES.
6. PROVIDE 12-STRAND MULTIMODE FIBER CABLE. PROVIDE PATCH PANEL AT NEW RTU CABINET IN SUBSTATION 83 AND IN AUXILIARY CABINET OF SUBSTATION 83B. TERMINATE SPARES.
7. PROVIDE 2-STRAND MULTIMODE FIBER CABLE. PROVIDE RS232 FIBER TO SERIAL CONVERTER AT EACH END.
8. EXISTING RTU CABINET.

LINE LEGEND

NEW	EXISTING	
		EQUIPMENT OR SUBSTATION
		SCADA COMM TO BLDG 900
		STP COPPER CABLING
		DNP3 PROTOCOL OVER OPTICAL FIBER CABLING
		MODBUS PROTOCOL OVER COPPER SERIAL CABLING

SYM	DESCRIPTION	DATE	APPR
1	AMENDMENT 003	04-26-16	DES

NAVFAC

DOUGLAS C. BUSHARD
STATE OF WASHINGTON
40923
REGISTERED
PROFESSIONAL ENGINEER
SEAL

Wood Harbinger
3009 112th Ave NE, Suite 100
Bellevue WA 98004
425.628.6000
woodharbinger.com
A/E INFO

APPROVED
FOR COMMANDER NAVFAC
ACTIVITY
SATISFACTORY TO DATE

DES DES DRW CN CHK DCB
PM/DM J. SHEPARD/L. ANDERSEN
BRANCH MANAGER: S. TEICHMANN
CHIEF ENG/ARCH: B. GALLOWAY
FIRE PROTECTION: B. NIXON

DEPARTMENT OF THE NAVY
NAVAL FACILITIES ENGINEERING COMMAND
NAVAL FACILITIES ENGINEERING COMMAND ~ NORTHWEST
NAVAL STATION - SILVERDALE, WASHINGTON
IPT
NAVAL BASE KITSAP – PSNS & IMF
BREMERTON, WA
FY-16 MCON PROJECT P-431
DD-6 MODERNIZATION & UTILITY SITE IMPROVEMENTS
DIAGRAMS – SUBSTATION 83 A & B COMMUNICATIONS / SCADA

SCALE: NTS
EPROJECT NO.: 1355285
CONSTR. CONTR. NO.: N44255-XX-X-XXXX
NAVFAC DRAWING NO./PWD NO.: 16034687/80941
SHEET 235 OF 248

E-614

DRAWFORM REVISION: 10 MARCH 2009

FILE NAME: G:\2010\10090\05 P431 DD6\DWG\E\80941_E-614.dwg LAYOUT NAME: 80941_E-614 PLOTTED: Wednesday, March 02, 2016 - 8:37am USER: cnelson

GENERAL NOTES:

1. FOR SYMBOLS AND ABBREVIATIONS REFER TO SHEET E-001 & E-002.

SHEET KEYNOTES:

1. EXTEND EXISTING SERIAL COMMUNICATIONS TO EXISTING SCHWEITZER (SEL) REAL TIME AUTOMATION CONTROLLER. PROGRAM NEW DATA CONCENTRATOR AND EXISTING RTAC.
2. PROVIDE 24-STRAND MULTIMODE FIBER CABLE FOR LINE DIFFERENTIAL PILOT WIRE. PROVIDE PATCH PANEL AT SUBSTATION N AND IN EXISTING SCADA CABINET OF SUBSTATION D. TERMINATE SPARES.
3. PROVIDE 24-STRAND MULTIMODE FIBER CABLE FOR SCADA COMMUNICATIONS. PROVIDE PATCH PANEL AT SUBSTATION N AND IN EXISTING SCADA CABINET OF SUBSTATION D. TERMINATE SPARES.
4. PROVIDE IRIG-B COMMUNICATIONS CABLE PER EQUIPMENT MANUFACTURER'S REQUIREMENTS.

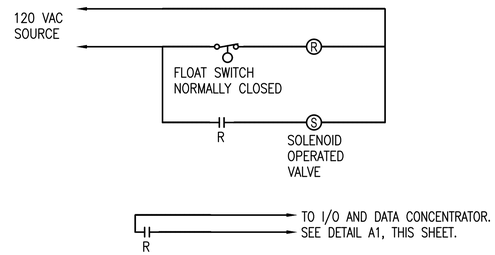

DIAGRAMS - SUBSTATION N OIL CONTAINMENT CONTROL (C2)
SCALE: NONE

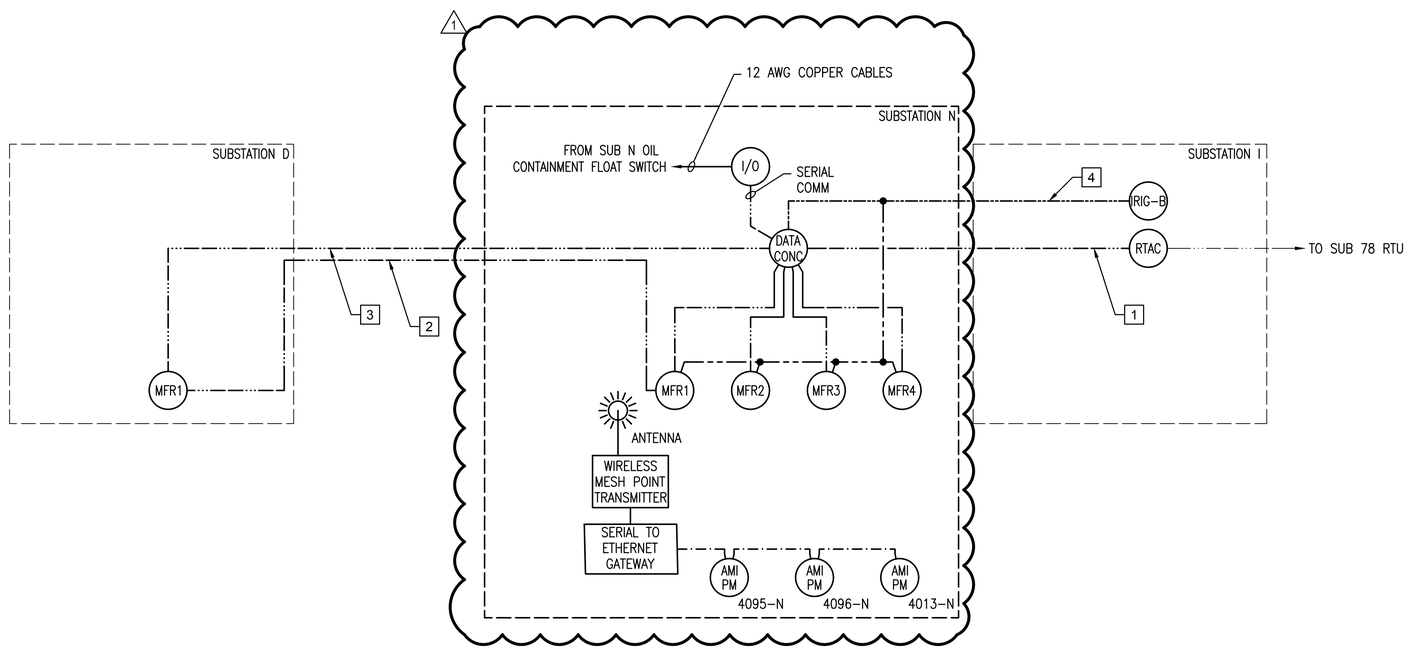

DIAGRAM - SUBSTATION N SCADA AND LINE DIFFERENTIAL PROTECTION (A1)
SCALE: NONE

LINE LEGEND

NEW	EXISTING	
		SINGLE MODE FIBER COMMUNICATIONS
		IRIG-B COMM
		COMPONENT BOUNDARY

STM	DESCRIPTION	DATE	APPR
1	AMENDMENT 003	04-26-16	DES

NAVFAC

DOUGLAS C. BUSHARD, STATE OF WASHINGTON, 40923, REGISTERED PROFESSIONAL ENGINEER, SEAL

Wood Harbinger
3009 112th Ave NE, Suite 100
Bellevue WA 98004
425.628.6000
woodharbinger.com
A/E INFO.

APPROVED
FOR COMMANDER NAVFAC
ACTIVITY
SATISFACTORY TO DATE

DES DES DRW CN CHK DCB
PM/DM: J. SHEPARD/L. ANDERSEN
BRANCH MANAGER: S. TEICHMANN
CHIEF ENG/ARCH: B. GALLOWAY
FIRE PROTECTION: B. NIXON

DEPARTMENT OF THE NAVY
NAVAL FACILITIES ENGINEERING COMMAND
IPT NAVAL FACILITIES ENGINEERING COMMAND ~ NORTHWEST
NAVAL STATION - SILVERDALE, WASHINGTON
NAVAL BASE KITSAP - PSNS & IMF
BREMERTON, WA
FY-16 MCON PROJECT P-431
DD-6 MODERNIZATION & UTILITY SITE IMPROVEMENTS
DIAGRAM - SUBSTATION N SCADA AND LINE DIFFERENTIAL PROTECTION

SCALE: NTS
EPROJECT NO.: 1355285
CONSTR. CONTR. NO.: N44255-XX-X-XXXX
NAVFAC DRAWING NO./PWD NO.: 16034691/80945
SHEET 239 OF 248

E-624

DRAWFORM REVISION: 10 MARCH 2009

FILE NAME: G:\2010\10090\05 P431 DD6\DWG\E\80945_E-624.dwg LAYOUT NAME: 80945_E-624 PLOTTED: Wednesday, March 02, 2016 - 8:37am USER: cnelson

GENERAL NOTES:

1. FOR SYMBOLS AND ABBREVIATIONS REFER TO SHEET E-001 & E-002.

MOTOR AND EQUIPMENT WIRING SCHEDULE

PLAN MARK	DESCRIPTION	LOCATION	SHEET SHOWN	HP/ KW	VOLTS	PH	PANEL	WIRE	RACEWAY	DISCONNECT SIZE AMPS	STARTER NEMA SIZE	STARTER COMB'N YES	STARTER COMB'N NO	REMARKS
AC-12	AIR COMPRESSOR	COMPRESSOR ROOM	E-121	1500 HP	4160	3	MCC CA-4	3#4/0 + 1#4G	3"	400	–	–	–	SOFT STARTER BY MECH
AC-12-P	AIR COMPRESSOR OIL PUMP	COMPRESSOR ROOM	E-121	1.5 HP	480	3	MP	3#12 + 1#12EGC	3/4"	30	0	*	*	
AC-12-H	AIR COMPRESSOR OIL HEATER	COMPRESSOR ROOM	E-121	2.1 KW	480	3	MP	3#12 + 1#12EGC	3/4"	30	–	–	–	
AC-12-C	AIR COMPRESSOR CONTROLS	COMPRESSOR ROOM	E-121	0.5 KW	120	1	PP	2#12 + 1#12EGC	3/4"	20	–	–	–	
AC-13	AIR COMPRESSOR	COMPRESSOR ROOM	E-121	1500 HP	4160	3	MCC CA-4	3#4/0 + 1#4G	3"	400	–	–	–	SOFT STARTER BY MECH
AC-13-P	AIR COMPRESSOR OIL PUMP	COMPRESSOR ROOM	E-121	1.5 HP	480	3	MP	3#12 + 1#12EGC	3/4"	30	0	*	*	
AC-13-H	AIR COMPRESSOR OIL HEATER	COMPRESSOR ROOM	E-121	2.1 KW	480	3	MP	3#12 + 1#12EGC	3/4"	30	–	–	–	
AC-13-C	AIR COMPRESSOR CONTROLS	COMPRESSOR ROOM	E-121	0.5 KW	120	3	PP	2#12 + 1#12EGC	3/4"	20	–	–	–	
AC-14	AIR COMPRESSOR	COMPRESSOR ROOM		1500 HP	4160	3								FUTURE EQUIPMENT
AC-14-P	AIR COMPRESSOR OIL PUMP	COMPRESSOR ROOM		1.5 HP	480	3								FUTURE EQUIPMENT
AC-14-H	AIR COMPRESSOR OIL HEATER	COMPRESSOR ROOM		2.1 KW	480	3								FUTURE EQUIPMENT
AC-14-C	AIR COMPRESSOR CONTROLS	COMPRESSOR ROOM		0.5 KW	120	3								FUTURE EQUIPMENT
AD-12	COMPRESSED AIR DRYER	COMPRESSOR ROOM	E-121	36 KW	460	3	MN	3#6 + 1#10EGC	1"	60	–	–	–	
AD-13	COMPRESSED AIR DRYER	COMPRESSOR ROOM	E-121	36 KW	460	3	MN	3#6 + 1#10EGC	1"	60	–	–	–	
AD-14	COMPRESSED AIR DRYER	COMPRESSOR ROOM		36 KW	460	3								FUTURE EQUIPMENT
CF-1	CEILING FAN	COMPRESSOR ROOM	E-121	3.6 KW	460	3	MP	3#12 + 1#12EGC	3/4"	30				
CS-1	CENTRIF SEPARATOR PUMP	COMPRESSOR ROOM	E-121	10 HP	460	3	MP	3#12 + 1#12EGC	3/4"	30	1	X		
CS-2	CENTRIF SEPARATOR PUMP	COMPRESSOR ROOM		10 HP	460	3								FUTURE EQUIPMENT
FC-1	FLUID COOLER FAN	ROOF	E-122	46.6 KW	460	3	MN	4#2 + 1#6EGC	1-1/2"	60	–	–	–	SGL PT CONN. NEMA 4X. VFD BY MECH
FC-2	FLUID COOLER FAN	ROOF	E-122	46.6 KW	460	3	MN	4#2 + 1#6EGC	1-1/2"	60	–	–	–	SGL PT CONN. NEMA 4X. VFD BY MECH
HT	HEAT TRACE	ROOF	E-122	1.20 KW	120	1	PP	2#10 + 1#10EGC	3/4"	30	–	–	–	NEMA 4X
P-170	CCW PUMP	COMPRESSOR ROOM	E-121	30 HP	460	3	MN	3#4 + 1#8EGC	1-1/2"	60	–	–	–	VFD BY MECH
P-171	CCW PUMP	COMPRESSOR ROOM	E-121	30 HP	460	3	MN	3#4 + 1#8EGC	1-1/2"	60	–	–	–	VFD BY MECH
PG-1	PULSE GENERATOR	COMPRESSOR ROOM	E-121	1.80 KW	120	1	PP	2#12 + 1#12EGC	3/4"	20	–	–	–	**
SF-4	FAN	ROOF	E-122	5 HP	460	3	MP	3#12 + 1#12EGC	3/4"	30				NEMA 4X. VFD BY MECH
SF-5	FAN	ROOF	E-122	5 HP	460	3	MP	3#12 + 1#12EGC	3/4"	30				NEMA 4X. VFD BY MECH
TP-1-1	TRAP PRIMER	COMPRESSOR ROOM	E-121	120W	120	1	PP	2#12 + 1#12EGC	3/4"	20	–	–	–	**
TP-1-2	TRAP PRIMER	COMPRESSOR ROOM	E-121	120W	120	1	PP	2#12 + 1#12EGC	3/4"	20	–	–	–	**
UH-1	UNIT HEATERS	COMPRESSOR ROOM	E-121	.17 KW	120	1	PP	2#12 + 1#12EGC	3/4"	20	–	–	–	**
UH-2	UNIT HEATERS	COMPRESSOR ROOM	E-121	.17 KW	120	1	PP	2#12 + 1#12EGC	3/4"	20	–	–	–	**

1

NOTES:
PROVIDE ALL CONDUIT, WIRING AND INTERCONNECTIONS BETWEEN PANEL/SOURCE AND LOAD.
PROVIDE ALL CONNECTIONS FOR MOTOR, VARIABLE FREQUENCY DRIVE AND HARMONIC FILTER PROVIDED BY MECHANICAL CONTRACTOR.
* PROVIDE PER MANUFACTURER'S RECOMMENDATIONS.
** PROVIDE MOTOR RATED TOGGLE SWITCH.

LIGHTING LUMINAIRE SCHEDULE

TYPE	DESCRIPTION	MODEL	LAMPS	WATTS	LUMENS	MOUNTING	VOLTAGE	REMARKS
PL1	4FT LINEAR LED HIGH BAY WITH WIRE GUARD, DIMMING, ACRYLIC LENS AND WIDE DISTRIBUTION	GE LTG: ABV1-0-1-V-47-1-N-V-ST-K-N-W METALUX: HBLED-LD3-10-W-CL/WG-277-L840-CD-1 LITHONIA: IBL-12L-WD- -MVOLT-LP840-GLR-WGX	LED 4000K	95	12000	PENDANT	UNIV 120/277V	
WL1	WALL MOUNTED EXTERIOR LED LUMINAIRE WITH PHOTOCELL CONTROL, INTEGRAL COLD-WEATHER BALLAST	LSI INDUSTRIES XPWS3-FT-LED-28-350-NW-UE-MSV GARDCO 111L-3-30LA-NW-BRP-F-PCB-WG LITHONIA CSXW-LED-30C-40K-TFTM-277-VG	LED 4500K	34	2863	WALL	UNIV 120/277V	ABOVE ENTRY DOOR
WL2	WALL MOUNTED EXTERIOR LED LUMINAIRE WITH PHOTOCELL CONTROL, INTEGRAL COLD-WEATHER BALLAST AND WIREGUARD	LSI INDUSTRIES XPWS3-FT-LED-48-350-NW-UE-MSV GARDCO 101L-3-55LA-NW-BRP-F-PCB-WG LITHONIA WSTLED-1-10A700/40K-SR3--PE-SF-ELCW-WG	LED 4500K	55	4553	WALL	UNIV 120/277V	OVER ROLL-UP DOORS
EX1	SINGLE FACE DIE-CAST ALUMINUM EXIT WITH GREEN PANEL, BATTERY PACK AND VANDAL SHIELD	HE WILLIAMS: EXIT/CA-SF-G-AF-BA-EM CHLORIDE ER55LD-3-G EXITRONIX G402-WB-BL-G2-VL-XG1	LED	2		WALL / CEILING SURFACE	UNIV 120/277	

STM	DESCRIPTION	DATE	APPR
1	AMENDMENT 003	04-26-16	DES

NAVFAC

DOUGLAS C. BUSHARD, STATE OF WASHINGTON, 40923, REGISTERED PROFESSIONAL ENGINEER — SEAL

Wood Harbinger
3009 112th Ave NE, Suite 100
Bellevue WA 98004
425.628.6000
woodharbinger.com
A/E INFO

APPROVED
FOR COMMANDER NAVFAC
ACTIVITY
SATISFACTORY TO DATE

DES DES DRW CN CHK DCB
PM/DM: J. SHEPARD/L. ANDERSEN
BRANCH MANAGER: S. TEICHMANN
CHIEF ENG/ARCH: B. GALLOWAY
FIRE PROTECTION: B. NIXON

DEPARTMENT OF THE NAVY
NAVAL FACILITIES ENGINEERING COMMAND
NAVAL FACILITIES ENGINEERING COMMAND ~ NORTHWEST
NAVAL STATION - SILVERDALE, WASHINGTON
IPT NAVAL BASE KITSAP – PSNS & IMF
BREMERTON, WA
FY-16 MCON PROJECT P-431
DD-6 MODERNIZATION & UTILITY SITE IMPROVEMENTS
SCHEDULES – COMPRESSOR BUILDING

SCALE: NTS
EPROJECT NO.: 1355285
CONSTR. CONTR. NO.: N44255-XX-X-XXXX
NAVFAC DRAWING NO./PWD NO.: 16034699/80953
SHEET 247 OF 248
E-721

DRAWFORM REVISION: 10 MARCH 2009

FILE NAME: G:\2010\10090\05 P431 DD6\DWG\E\80953_E-721.dwg LAYOUT NAME: 80953_E-721 PLOTTED: Wednesday, March 02, 2016 - 8:37am USER: cnelson