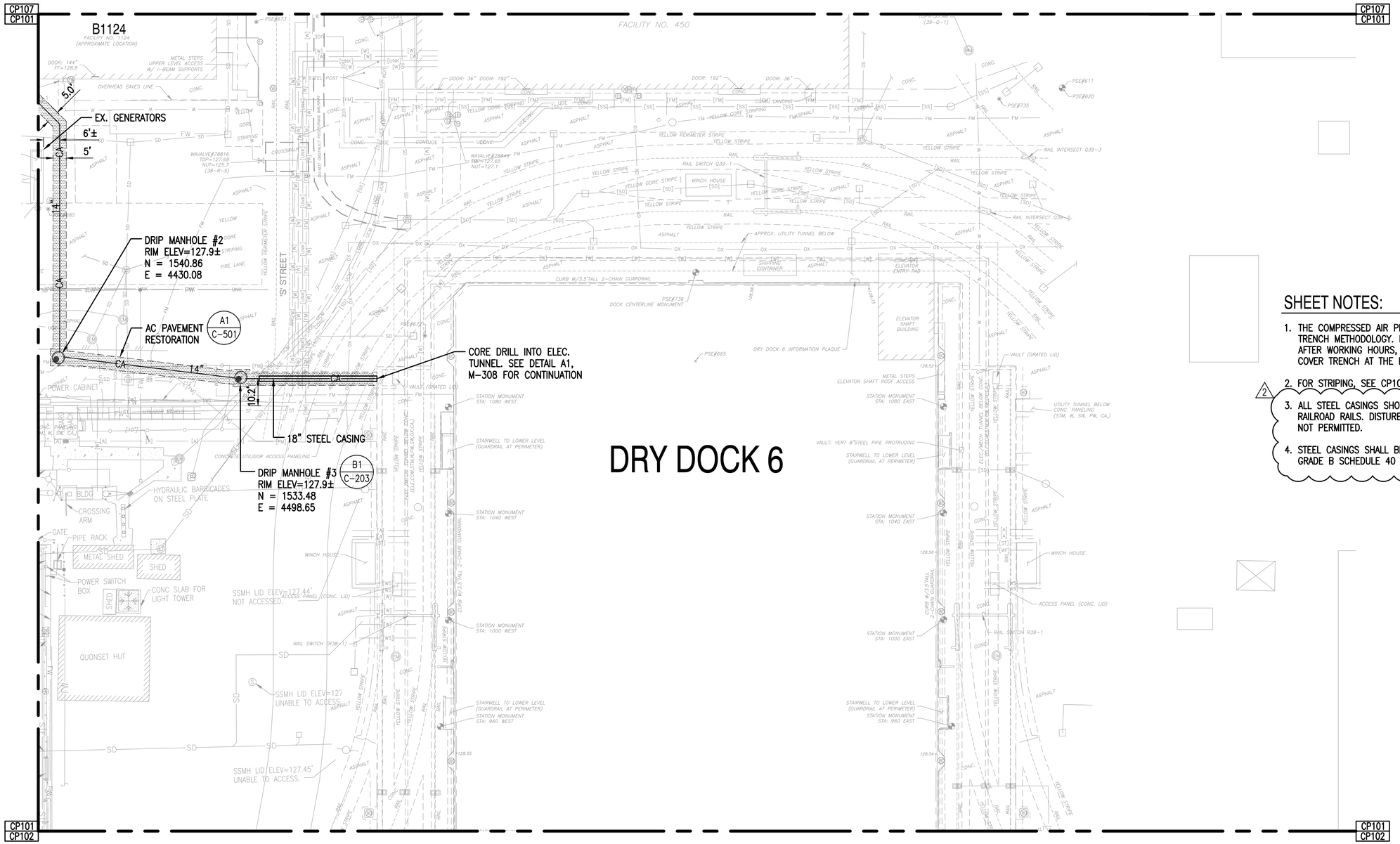

PAVING, UTILITY AND HORIZONTAL CONTROL PLAN-A

SCALE: 1"=20'

SHEET NOTES:

1. THE COMPRESSED AIR PIPE MUST BE INSTALLED BY OPEN TRENCH METHODOLOGY. IF TRENCH MUST REMAIN OPEN AFTER WORKING HOURS, STEEL PLATES MUST BE USED TO COVER TRENCH AT THE END OF EACH DAY.
2. FOR STRIPING, SEE CP108, DETAIL A1.
3. ALL STEEL CASINGS SHOWN MUST BE JACKED UNDER THE RAILROAD RAILS. DISTURBANCE TO THE RAIL SUPPORT IS NOT PERMITTED.
4. STEEL CASINGS SHALL BE HOT-DIPPED GALVANIZED ASTM 53 GRADE B SCHEDULE 40 STEEL PIPE.

1" = 20'

0 20 40 60

HORIZONTAL SCALE IN FEET

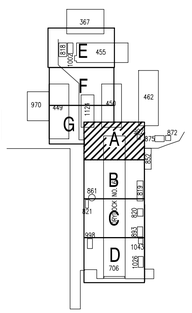

KEY PLAN DD-6

SCALE: NONE

STM	DESCRIPTION	DATE	APPR
2	AMENDMENT 0004	5-02-16	SDM

NAVFAC

DAVID E. SCHWARTZ, STATE OF WASHINGTON, 25448, REGISTERED PROFESSIONAL ENGINEER — SEAL

kpff — 1601 5th Avenue, Suite 1600, Seattle, WA 98101, 206.622.5822, www.kpff.com — A/E INFO

APPROVED

FOR COMMANDER NAVFAC

ACTIVITY

SATISFACTORY TO DATE

DES SDM | DRW AST | CHK DES

PM/DM: J. SHEPARD / L. ANDERSEN

BRANCH MANAGER: J. KISIDAY

CHIEF ENG/ARCH: B. GALLOWAY

FIRE PROTECTION: B. NIXON

DEPARTMENT OF THE NAVY
NAVAL FACILITIES ENGINEERING COMMAND
NAVAL FACILITIES ENGINEERING COMMAND – NORTHWEST
NAVAL STATION – SILVERDALE, WASHINGTON
IPT NAVAL BASE KITSAP – PSNS & IMF
BREMERTON, WA
FY-16 MCON PROJECT P-431
DD-6 MODERNIZATION & UTILITY SITE IMPROVEMENTS
PAVING, UTILITY AND HORIZONTAL CONTROL PLAN-A

SCALE: 1" = 20'

EPROJECT NO.: 1355285

CONSTR. CONTR. NO. N44255-XX-X-XXXX

NAVFAC DRAWING NO./PWD NO. 16034476/80730

SHEET 24 OF 248

CP101

DRAWFORM REVISION: 10 MARCH 2009

FILE NAME: Z:\15000-115400\15201 (folk bremerton dd6)\CADD\Design\P431-D006-CP101-8.dwg LAYOUT NAME: CP101 Paving PLOTTED: Monday, May 02, 2016 - 11:10am USER: kurtp

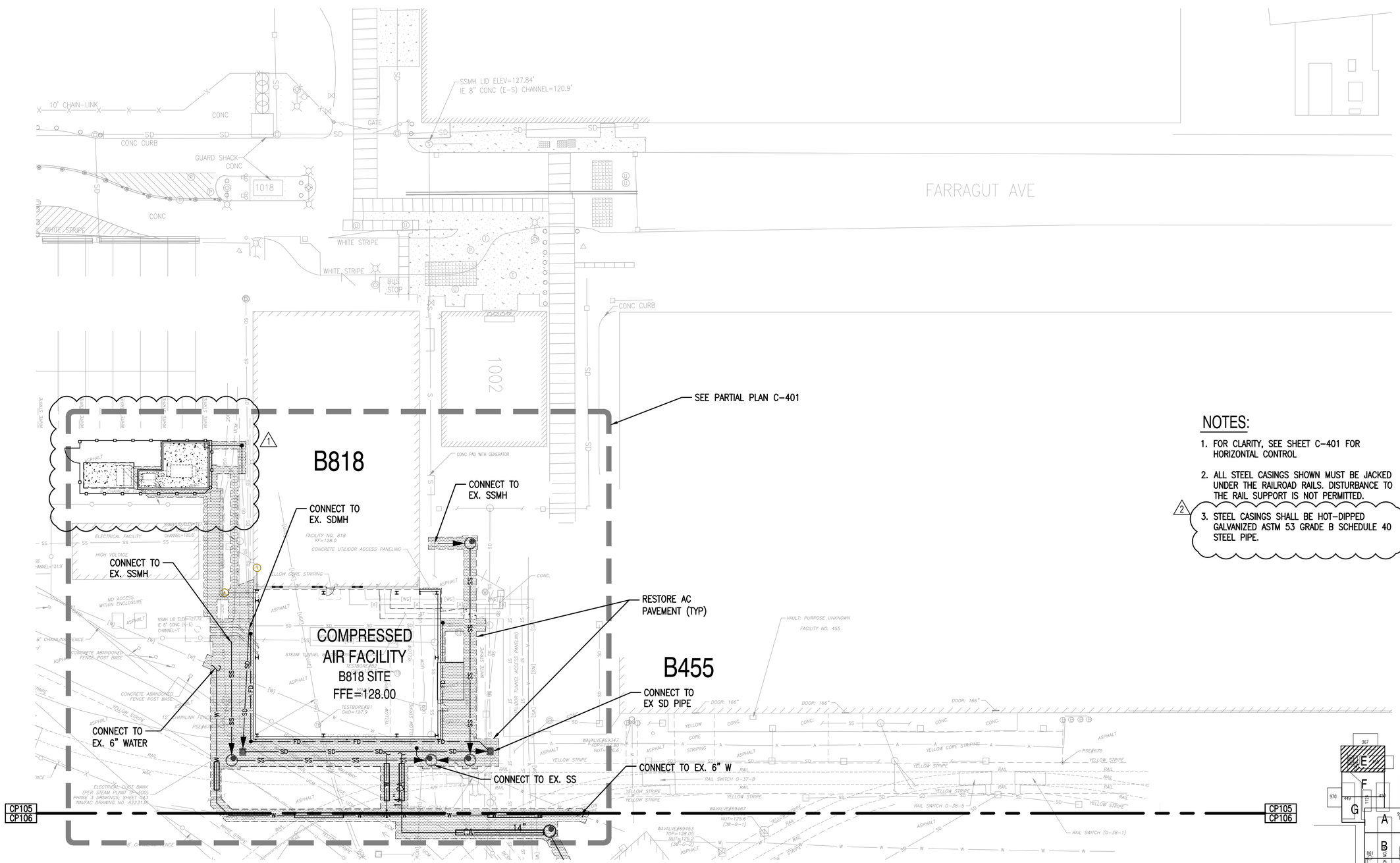

PAVING, UTILITY AND HORIZONTAL CONTROL PLAN-E

SCALE: 1"=20'

NOTES:

1. FOR CLARITY, SEE SHEET C-401 FOR HORIZONTAL CONTROL
2. ALL STEEL CASINGS SHOWN MUST BE JACKED UNDER THE RAILROAD RAILS. DISTURBANCE TO THE RAIL SUPPORT IS NOT PERMITTED.
3. STEEL CASINGS SHALL BE HOT-DIPPED GALVANIZED ASTM 53 GRADE B SCHEDULE 40 STEEL PIPE.

1" = 20'

0 20 40 60

HORIZONTAL SCALE IN FEET

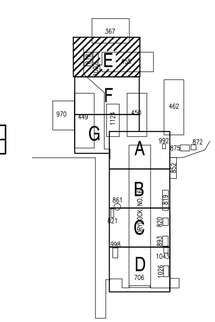

KEY PLAN DD-6

SCALE: NONE

STM	DESCRIPTION	DATE	APPR
2	AMENDMENT 0004	5-02-16	SDM
1	AMENDMENT 001	2-19-16	SDM

NAVFAC

DAVID E. SCHWARTZ STATE OF WASHINGTON 25448 REGISTERED PROFESSIONAL ENGINEER

SEAL

kpff 1601 5th Avenue, Suite 1600 Seattle, WA 98101 206.622.5822 www.kpff.com

A/E INFO

APPROVED

FOR COMMANDER NAVFAC

ACTIVITY

SATISFACTORY TO DATE

DES SDM DRW AST CHK DES

PM/DM: J. SHEPARD / L. ANDERSEN

BRANCH MANAGER: J. KISIDAY

CHIEF ENG/ARCH: B. GALLOWAY

FIRE PROTECTION: B. NIXON

DEPARTMENT OF THE NAVY
NAVAL FACILITIES ENGINEERING COMMAND
NAVAL FACILITIES ENGINEERING COMMAND – NORTHWEST
NAVAL BASE KITSAP – PSNS & IMF
NAVAL STATION – SILVERDALE, WASHINGTON
BREMERTON, WA

FY-16 MCON PROJECT P-431
DD-6 MODERNIZATION & UTILITY SITE IMPROVEMENTS

PAVING, UTILITY AND HORIZONTAL CONTROL PLAN–E

SCALE: 1" = 20'

EPROJECT NO.: 1355285

CONSTR. CONTR. NO. N44255–XX–X–XXXX

NAVFAC DRAWING NO./PWD NO. 16034480/80734

SHEET 28 OF 248

CP105

DRAWFORM REVISION: 10 MARCH 2009

FILE NAME: Z:\115000-115400\15201 (cbk bremerton dd6)\CADD\Design\P431-0006-CP101-8.dwg LAYOUT NAME: CP105 Paving PLOTTED: Monday, May 02, 2016 - 11:11am USER: kurtp

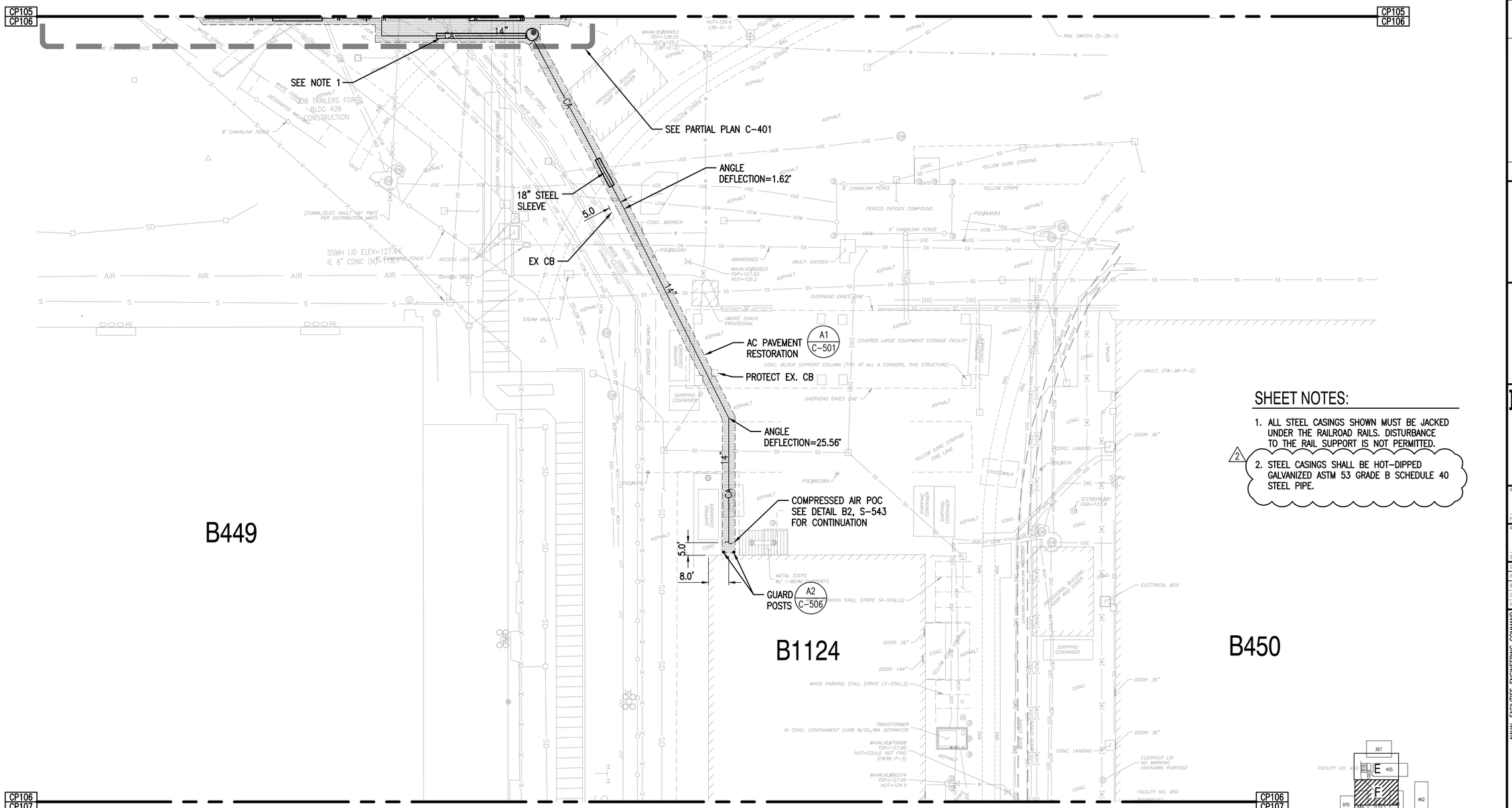

PAVING, UTILITY AND HORIZONTAL CONTROL PLAN-F

SCALE: 1"=20'

1" = 20'

0 20 40 60

HORIZONTAL SCALE IN FEET

SHEET NOTES:

1. ALL STEEL CASINGS SHOWN MUST BE JACKED UNDER THE RAILROAD RAILS. DISTURBANCE TO THE RAIL SUPPORT IS NOT PERMITTED.
2. STEEL CASINGS SHALL BE HOT-DIPPED GALVANIZED ASTM 53 GRADE B SCHEDULE 40 STEEL PIPE.

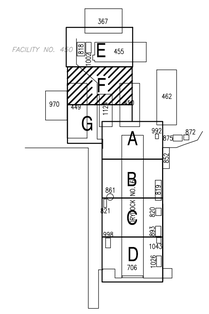

KEY PLAN DD-6

SCALE: NONE

SYM	DESCRIPTION	DATE	APPR
2	AMENDMENT 0004	5-02-16	SDM

NAVFAC

DAVID E. SCHWARTZ STATE OF WASHINGTON 25448 REGISTERED PROFESSIONAL ENGINEER

SEAL

kpff 1601 5th Avenue, Suite 1600 Seattle, WA 98101 206.622.5822 www.kpff.com

A/E INFO

APPROVED

FOR COMMANDER NAVFAC

ACTIVITY

SATISFACTORY TO DATE

DES SDM | DRW AST | CHK DES

PM/DM: J. SHEPARD / L. ANDERSEN

BRANCH MANAGER: J. KISIDAY

CHIEF ENG/ARCH: B. GALLOWAY

FIRE PROTECTION: B. NIXON

DEPARTMENT OF THE NAVY
NAVAL FACILITIES ENGINEERING COMMAND
NAVAL FACILITIES ENGINEERING COMMAND ~ NORTHWEST
NAVAL STATION – SILVERDALE, WASHINGTON
NAVAL BASE KITSAP – PSNS & IMF
BREMERTON, WA
FY-16 MCON PROJECT P-431
DD-6 MODERNIZATION & UTILITY SITE IMPROVEMENTS
PAVING, UTILITY AND HORIZONTAL CONTROL PLAN–F

SCALE: 1" = 20'

EPROJECT NO.: 1355285

CONSTR. CONTR. NO.: N44255-XX-X-XXXX

NAVFAC DRAWING NO./PWD NO.: 16034481/80735

SHEET 29 OF 248

CP106

DRAWFORM REVISION: 10 MARCH 2009

FILE NAME: Z:\115000-115400\115201 (nbk bremerton d46)\CADD\Design\P431-0006-CP101-8.dwg LAYOUT NAME: CP106 Paving PLOTTED: Monday, May 02, 2016 - 11:10am USER: kurtp

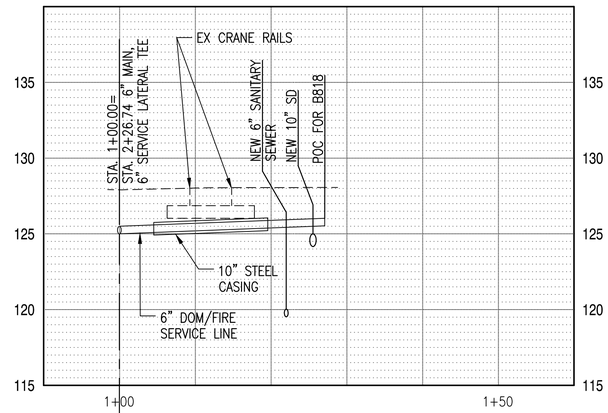

6" SERVICE LATERAL

POC 6" SERVICE LATERAL

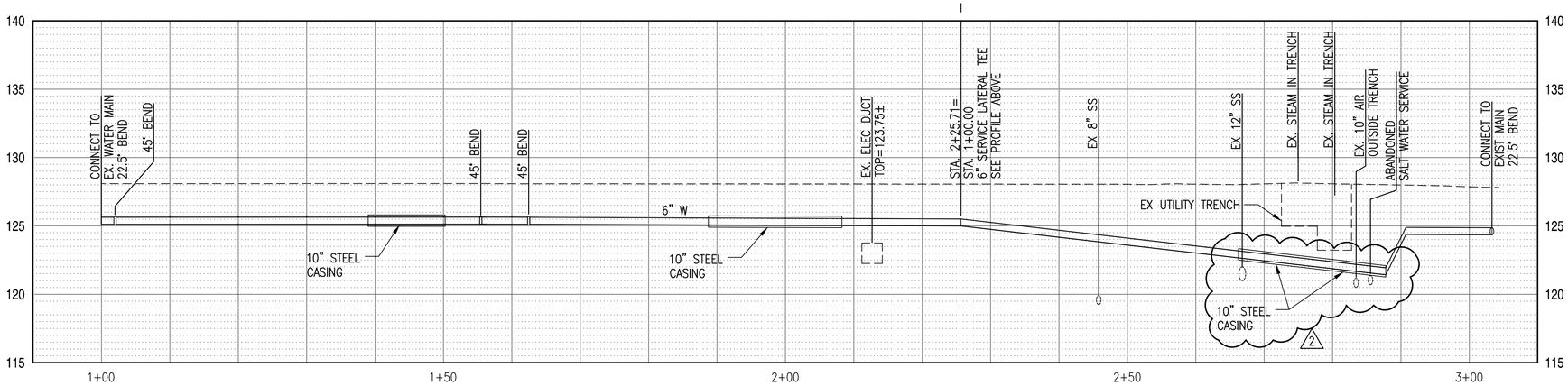

WATER LINE PROFILES

SCALE: 1"=10'

C-401 A1

0 5 10 20
1 inch = 10 ft. HORZ

0 2.5 5 10
1 inch = 5 ft. VERT

STM	DESCRIPTION	DATE	APPR
2	AMENDMENT 0004	5-02-16	SDM

NAVFAC

DAVID E. SCHWARTZ
STATE OF WASHINGTON
25448
REGISTERED
PROFESSIONAL ENGINEER
SEAL

kpff
1601 5th Avenue, Suite 1600
Seattle, WA 98101
206.622.5822
www.kpff.com

A/E INFO

APPROVED

FOR COMMANDER NAVFAC

ACTIVITY

SATISFACTORY TO DATE

DES SDM | DRW AST | CHK DES

PM/DM: J. SHEPARD / L. ANDERSEN

BRANCH MANAGER: J. KISIDAY

CHIEF ENG/ARCH: B. GALLOWAY

FIRE PROTECTION: B. NIXON

DEPARTMENT OF THE NAVY
NAVAL FACILITIES ENGINEERING COMMAND
NAVAL FACILITIES ENGINEERING COMMAND ~ NORTHWEST
NAVAL STATION - SILVERDALE, WASHINGTON
BPT
NAVAL BASE KITSAP – PSNS & IMF
BREMERTON, WA
FY-16 MCON PROJECT P-431
DD-6 MODERNIZATION & UTILITY SITE IMPROVEMENTS
WATER LINE PROFILES

SCALE: 1" = 10'

EPROJECT NO.: 1355285

CONSTR. CONTR. NO.
N44255-XX-X-XXXX

NAVFAC DRAWING NO./PWD NO.
16034484/80738

SHEET 32 OF 248

C-201

DRAWFORM REVISION: 10 MARCH 2009

FILE NAME: Z:\115000-115499\115201 (cbk bremerton dd6)\CADD\Design\P431-DD06-C-201-PF.dwg LAYOUT NAME: C-201 Profile PLOTTED: Monday, May 02, 2016 - 11:10am USER: kurfp

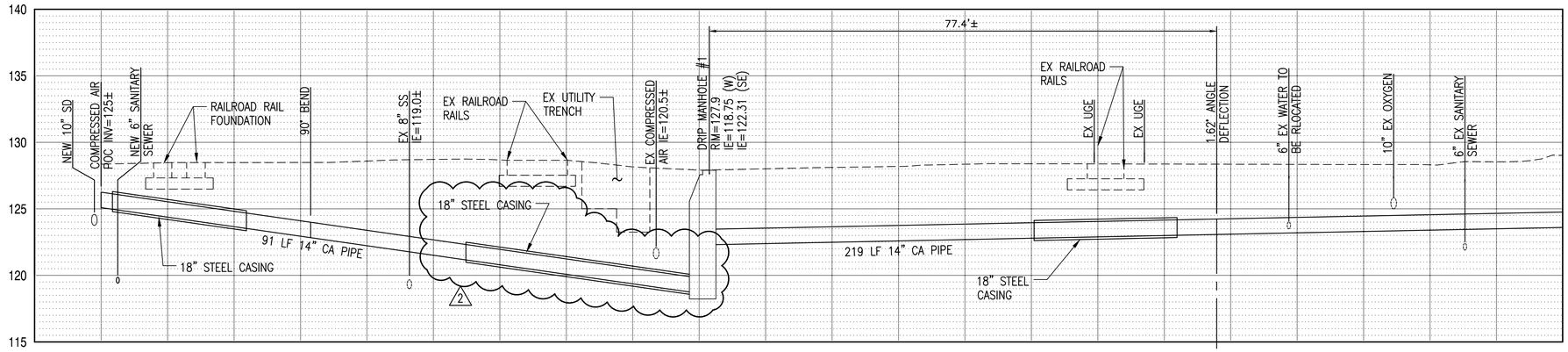

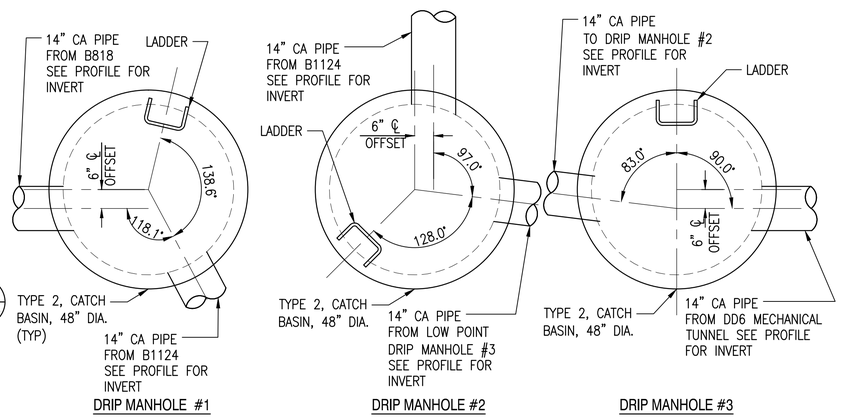

DRIP MANHOLES

SCALE: NTS CP101, CP107, C-401 B1

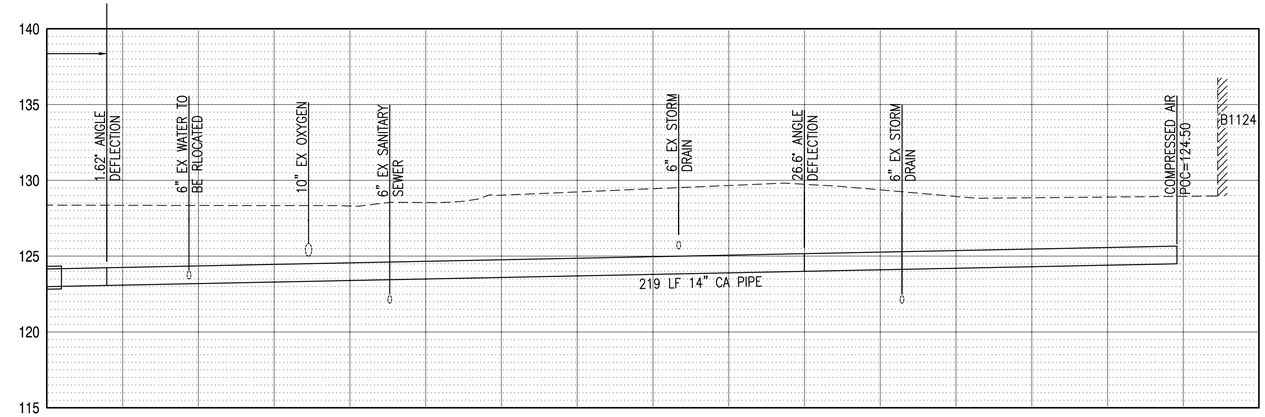

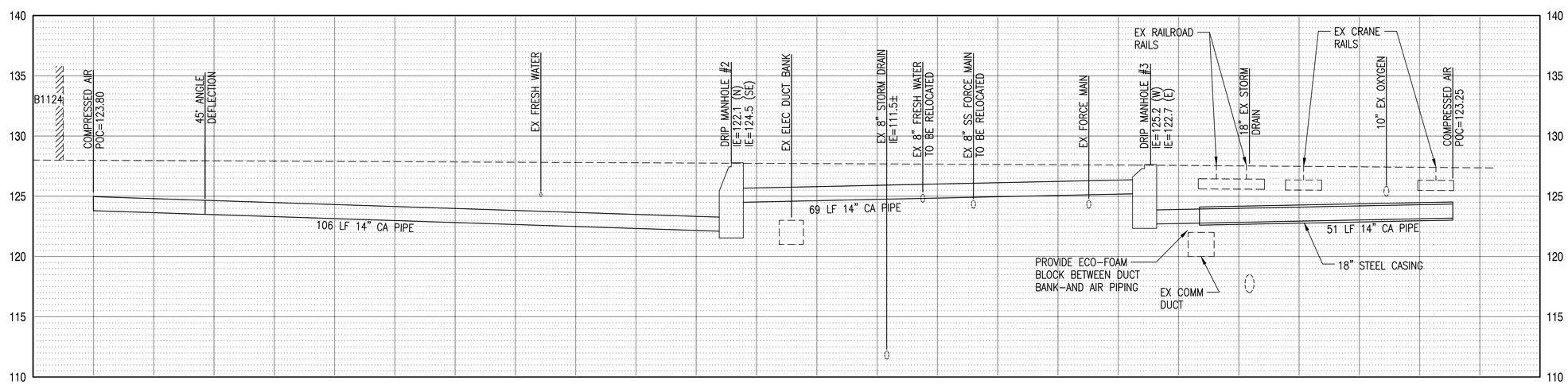

COMPRESSED AIR PROFILES

SCALE: 1"=10' CP101, CP105, CP106, CP107 A1

0 5 10 20
1 inch = 10 ft. HORZ
0 2.5 5 10
1 inch = 5 ft. VERT

STM	DESCRIPTION	DATE	APPR
2	AMENDMENT 0004	5-02-16	SDM

NAVFAC

DAVID E. SCHWARTZ STATE OF WASHINGTON 25448 REGISTERED PROFESSIONAL ENGINEER

SEAL

kpff 1601 5th Avenue, Suite 1600 Seattle, WA 98101 206.622.5822 www.kpff.com

A/E INFO

APPROVED

FOR COMMANDER NAVFAC

ACTIVITY

SATISFACTORY TO DATE

DES SDM DRW AST CHK DES

PM/DM: J. SHEPARD / L. ANDERSEN

BRANCH MANAGER: J. KISIDAY

CHIEF ENG/ARCH: B. GALLOWAY

FIRE PROTECTION: B. NIXON

DEPARTMENT OF THE NAVY
NAVAL FACILITIES ENGINEERING COMMAND
NAVAL FACILITIES ENGINEERING COMMAND ~ NORTHWEST
NAVAL STATION - SILVERDALE, WASHINGTON
BREMERTON, WA
IPT
NAVAL BASE KITSAP – PSNS & IMF
FY-16 MCON PROJECT P-431
DD-6 MODERNIZATION & UTILITY SITE IMPROVEMENTS
COMPRESSED AIR PROFILES

SCALE: 1" = 10'

EPROJECT NO.: 1355285

CONSTR. CONTR. NO. N44255-XX-X-XXXX

NAVFAC DRAWING NO./PWD NO. 16034486/80740

SHEET 34 OF 248

C-203

DRAWFORM REVISION: 10 MARCH 2009

FILE NAME: Z:\115000-115400\115201 (tak bremerton ddd)\CADD\Design\P431-0006-C-201-PF.dwg LAYOUT NAME: C-203 Profile PLOTTED: Monday, May 02, 2016 - 11:09am USER: kurtp

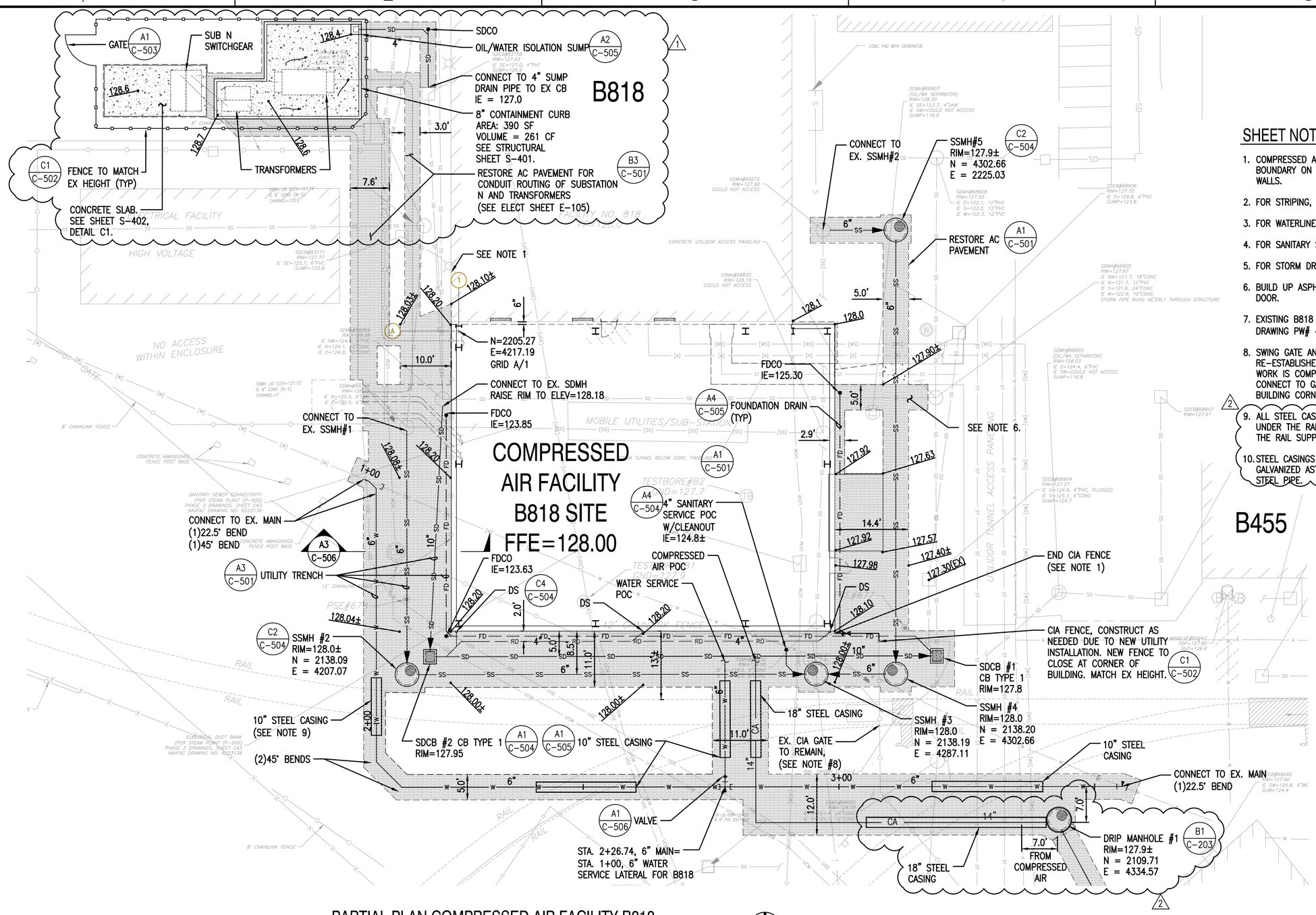

PARTIAL PLAN COMPRESSED AIR FACILITY B818

SCALE: 1"=10'

CP105

SHEET NOTES:

1. COMPRESSED AIR FACILITY BECOMES THE CIA BOUNDARY ON THE SOUTH AND WEST FACING WALLS.
2. FOR STRIPING, SEE CP108, DETAIL B1.
3. FOR WATERLINE PROFILES, SEE C-201.
4. FOR SANITARY SEWER PROFILES, SEE C-202.
5. FOR STORM DRAIN PROFILES, SEE C-204.
6. BUILD UP ASPHALT SECTION TO MEET FACILITY DOOR.
7. EXISTING B818 SLAB ELEVATION IS 128.0 PER DRAWING PW# 40138.
8. SWING GATE AND POSTS MUST BE RE-ESTABLISHED AFTER UTILITY AND PAVEMENT WORK IS COMPLETED. FINAL CIA FENCE MUST CONNECT TO GATE POST AND TERMINATE AT BUILDING CORNER.
9. ALL STEEL CASINGS SHOWN MUST BE JACKED UNDER THE RAILROAD RAILS. DISTURBANCE TO THE RAIL SUPPORT IS NOT PERMITTED.
10. STEEL CASINGS SHALL BE HOT-DIPPED GALVANIZED ASTM 53 GRADE B SCHEDULE 40 STEEL PIPE.

SYM	DESCRIPTION	DATE	APPR
2	AMENDMENT 0004	5-02-16	SDM
1	AMENDMENT 001	2-19-16	SDM

NAVFAC

DAVID E. SCHWARTZ STATE OF WASHINGTON 25446 REGISTERED PROFESSIONAL ENGINEER

SEAL

kpff 1601 5th Avenue, Suite 1600 Seattle, WA 98101 206.622.5822 www.kpff.com

A/E INFO.

APPROVED

FOR COMMANDER NAVFAC

ACTIVITY

SATISFACTORY TO DATE

DES SDM | DRW AST | CHK DES

PM/DM: J. SHEPARD / L. ANDERSEN

BRANCH MANAGER: J. KISIDAY

CHIEF ENG/ARCH: B. GALLOWAY

FIRE PROTECTION: B. NIXON

DEPARTMENT OF THE NAVY
NAVAL FACILITIES ENGINEERING COMMAND
NAVAL FACILITIES ENGINEERING COMMAND ~ NORTHWEST
NAVAL STATION - SILVERDALE, WASHINGTON
NAVAL BASE KITSAP – PSNS & IMF
BREMERTON, WA
FY-16 MCON PROJECT P-431
DD-6 MODERNIZATION & UTILITY SITE IMPROVEMENTS
PARTIAL PLAN COMPRESSED AIR FACILITY B818

SCALE: 1" = 10'

EPROJECT NO.: 1355285

CONSTR. CONTR. NO.: N44255-XX-X-XXXX

NAVFAC DRAWING NO./PWD NO.: 16034488/80742

SHEET 36 OF 248

C-401

DRAWFORM REVISION: 10 MARCH 2009

FILE NAME: Z:\115000-115499\115201 (nsk bremerton d46)\CADD\Design\P431-0006-C-401-001.dwg LAYOUT NAME: C-401 Details PLOTTED: Monday, May 02, 2016 - 11:17am USER: kurtp

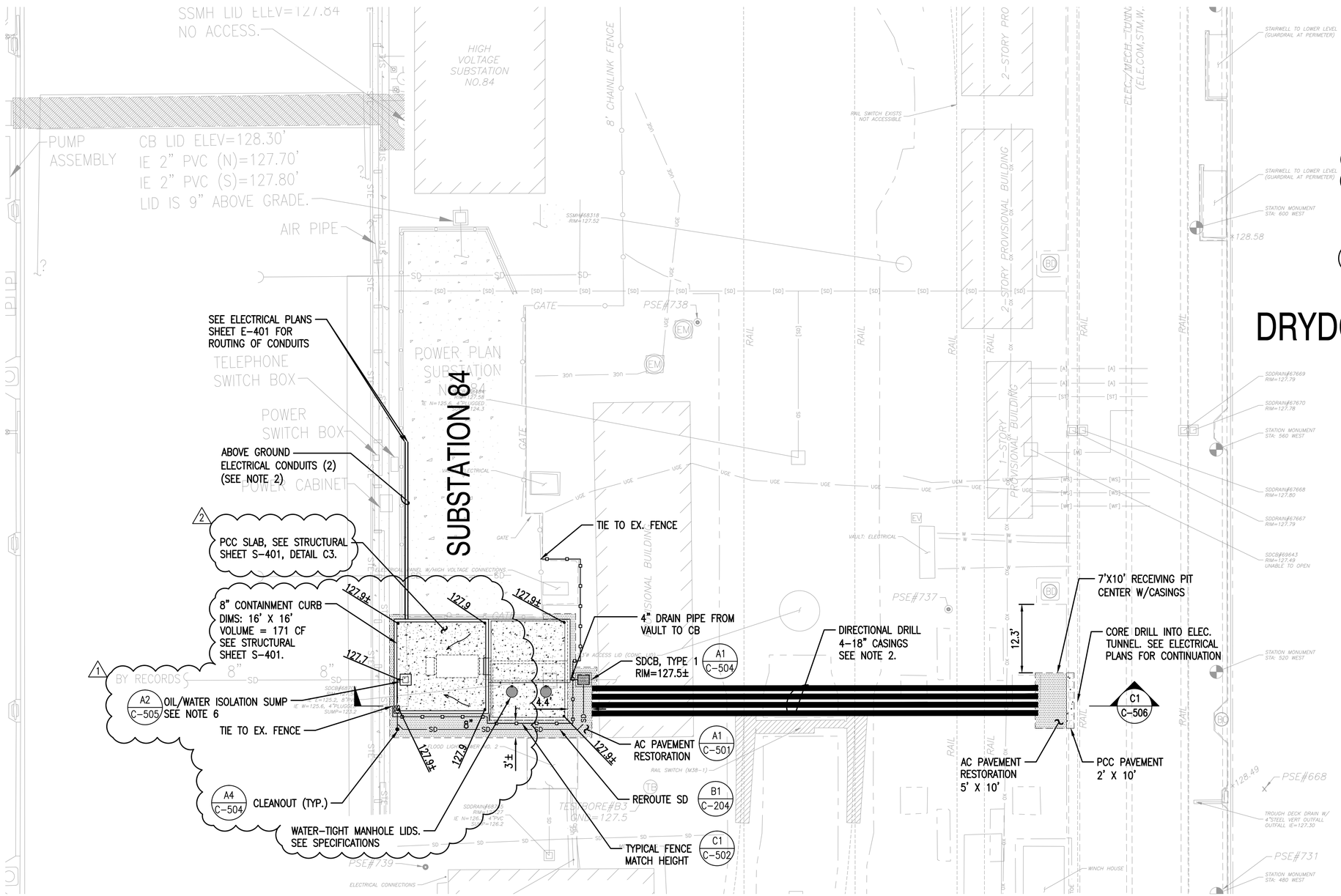

SHEET NOTES:

1. FOR STRIPING, SEE CP108, DETAIL C3.
2. FOR CONDUIT SIZES, SEE ELECTRICAL PLANS SHEET E-401.
3. CONTRACTOR TO FIELD LOCATE EXISTING STORM DRAIN TO BE INTERCEPTED AND REROUTED PRIOR TO INSTALLING THE CATCH BASIN.
4. CONTRACTOR MUST BEGIN DIRECTIONAL DRILLING OPERATIONS FROM THE VAULT SIDE.
5. FOR HORIZONTAL CONTROL, SEE CP103.
6. FIELD CONNECT SUMP DRAIN AND SD REROUTE PIPE TO EXISTING SD PIPE WITH AN 8"x4"x8" TEE BETWEEN FENCE AND 10" CURB. (1)
7. ALL STEEL CASINGS SHOWN MUST BE JACKED UNDER THE RAILROAD RAILS. DISTURBANCE TO THE RAIL SUPPORT IS NOT PERMITTED.
8. STEEL CASINGS SHALL ASTM 53 GRADE B SCHEDULE 40 STEEL PIPE. (2)

DRYDOCK 6

PARTIAL PLAN SUBSTATION 84A

SCALE: 1"=10'

CP103, CP108

1" = 10'

0 10 20 30

1 INCH = 10 FT. HORIZ.

SYM	DESCRIPTION	DATE	APPR
2	AMENDMENT 0004	5-02-16	SDM
1	AMENDMENT 001	2-19-16	SDM

NAVFAC

DAVID E. SCHWARTZ STATE OF WASHINGTON 25448 REGISTERED PROFESSIONAL ENGINEER

SEAL

kpff 1601 5th Avenue, Suite 1600 Seattle, WA 98101 206.622.5822 www.kpff.com

A/E INFO

APPROVED

FOR COMMANDER NAVFAC

ACTIVITY

SATISFACTORY TO DATE

DES SDM DRW AST CHK DES

PM/DM: J. SHEPARD / L. ANDERSEN

BRANCH MANAGER: J. KISIDAY

CHIEF ENG/ARCH: B. GALLOWAY

FIRE PROTECTION: B. NIXON

DEPARTMENT OF THE NAVY
NAVAL FACILITIES ENGINEERING COMMAND – NORTHWEST
NAVAL STATION – SILVERDALE, WASHINGTON
BREMERTON, WA

IPT NAVAL BASE KITSAP – PSNS & IMF

FY-16 MCON PROJECT P-431
DD-6 MODERNIZATION & UTILITY SITE IMPROVEMENTS

PARTIAL PLAN SUBSTATION 84A

SCALE: 1" = 10'

EPROJECT NO.: 1355285

CONSTR. CONTR. NO. N44255-XX-X-XXXX

NAVFAC DRAWING NO./PWD NO. 16034489/80743

SHEET 37 OF 248

C-402

DRAWFORM REVISION: 10 MARCH 2009

FILE NAME: Z:\15000-115400\15201 (folk bremerton ddd6)\CADD\Design\P431-0006-C-401-01.dwg LAYOUT NAME: C-402 Details PLOTTED: Monday, May 02, 2016 - 11:38am USER: kurtp

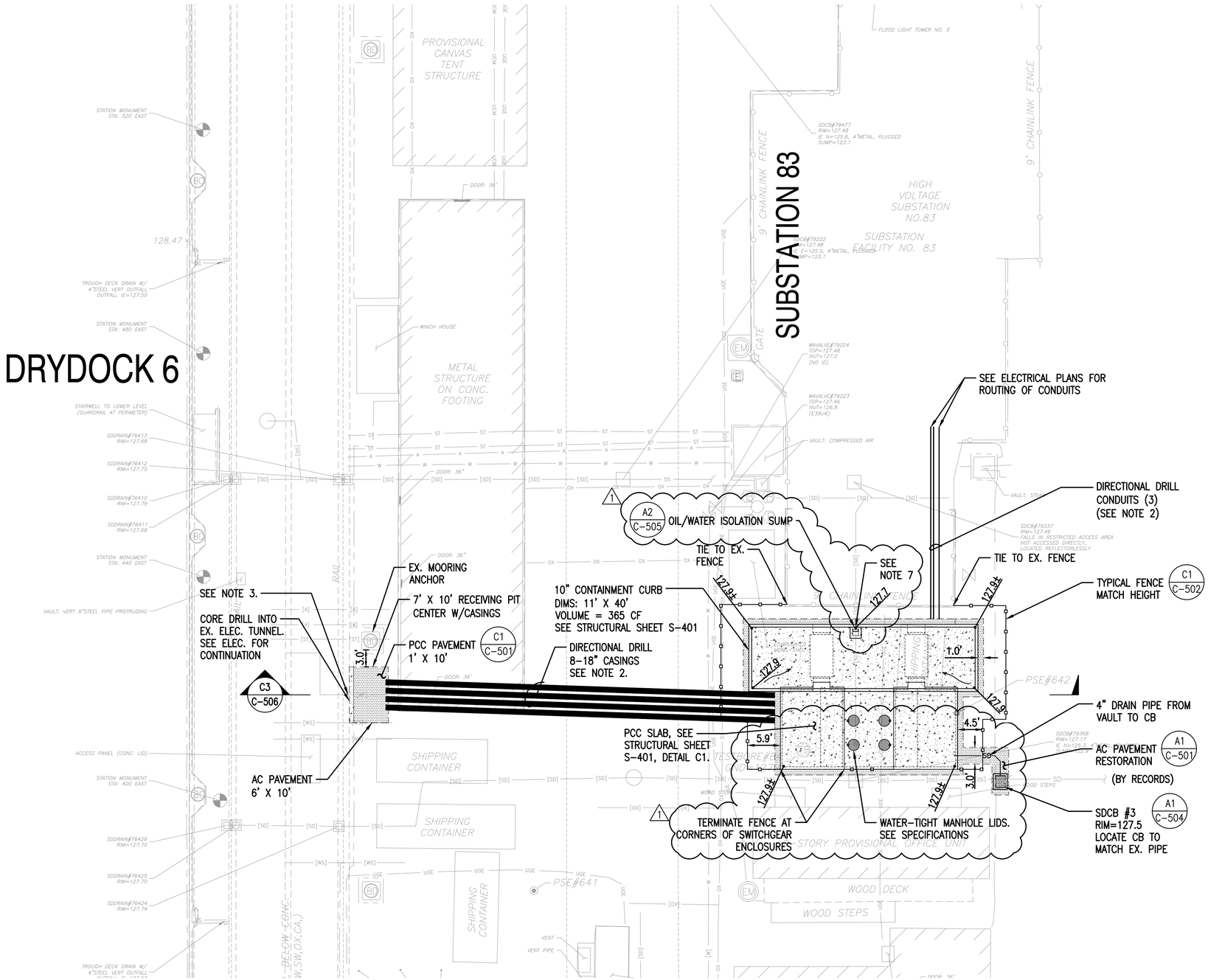

PARTIAL PLAN SUBSTATION 83A AND 83B

SCALE: 1"=10'

CP103, CP108

SHEET NOTES:

1. FOR STRIPING, SEE CP108, DETAIL A3.
2. FOR CONDUIT SIZES, SEE ELECTRICAL PLANS SHEET E-402.
3. EXISTING FRESH WATER SERVICE LINE MAY BE IMPACTED BY THE ELECTRICAL WORK. CONTRACTOR SHALL INCLUDE IN THEIR BID THE COST TO PERMANENTLY REROUTE THIS LINE.
4. CONTRACTOR TO FIELD LOCATE EXISTING STORM DRAIN TO BE INTERCEPTED PRIOR TO INSTALLING THE CATCH BASIN.
5. CONTRACTOR MUST BEGIN DIRECTIONAL DRILLING OPERATIONS FROM THE VAULT SIDE.
6. FOR HORIZONTAL CONTROL, SEE CP103.
7. REMOVE CAP AND CONNECT 4" SUMP DRAIN TO EXISTING 8" SD PIPE WITH A COUPLER. (1)
8. ALL STEEL CASINGS SHOWN MUST BE JACKED UNDER THE RAILROAD RAILS. DISTURBANCE TO THE RAIL SUPPORT IS NOT PERMITTED. (2)
9. STEEL CASINGS SHALL BE ASTM 53 GRADE B SCHEDULE 40 STEEL PIPE.

1" = 10'

0 10 20 30

1 INCH = 10 FT. HORIZ.

SYM	DESCRIPTION	DATE	APPR
2	AMENDMENT 0004	5-02-16	SDM
1	AMENDMENT 001	2-19-16	SDM

NAVFAC

DAVID E. SCHWARTZ STATE OF WASHINGTON 25446 REGISTERED PROFESSIONAL ENGINEER

SEAL

kpff 1601 5th Avenue, Suite 1600 Seattle, WA 98101 206.622.5822 www.kpff.com

A/E INFO

APPROVED

FOR COMMANDER NAVFAC

ACTIVITY

SATISFACTORY TO DATE

DES SDM | DRW AST | CHK DES

PM/DM: J. SHEPARD / L. ANDERSEN

BRANCH MANAGER: J. KISDAY

CHIEF ENG/ARCH: B. GALLOWAY

FIRE PROTECTION: B. NIXON

DEPARTMENT OF THE NAVY
NAVAL FACILITIES ENGINEERING COMMAND
NAVAL FACILITIES ENGINEERING COMMAND ~ NORTHWEST
NAVAL STATION - SILVERDALE, WASHINGTON
BREMERTON, WA
IPT
NAVAL BASE KITSAP – PSNS & IMF
FY-16 MCON PROJECT P-431
DD-6 MODERNIZATION & UTILITY SITE IMPROVEMENTS
PARTIAL PLAN SUBSTATION 83A AND 83B

SCALE: 1" = 10'

EPROJECT NO.: 1355285

CONSTR. CONTR. NO. N44255-XX-X-XXXX

NAVFAC DRAWING NO./PWD NO. 16034490/80744

SHEET 38 OF 248

C-403

DRAWFORM REVISION: 10 MARCH 2009

FILE NAME: Z:\115000-115400\115201 (nsk bremerton ddd6)\CADD\Design\P431-0006-C-401-01.dwg LAYOUT NAME: C-403 Details PLOTTED: Monday, May 02, 2016 - 11:09am USER: kurtp

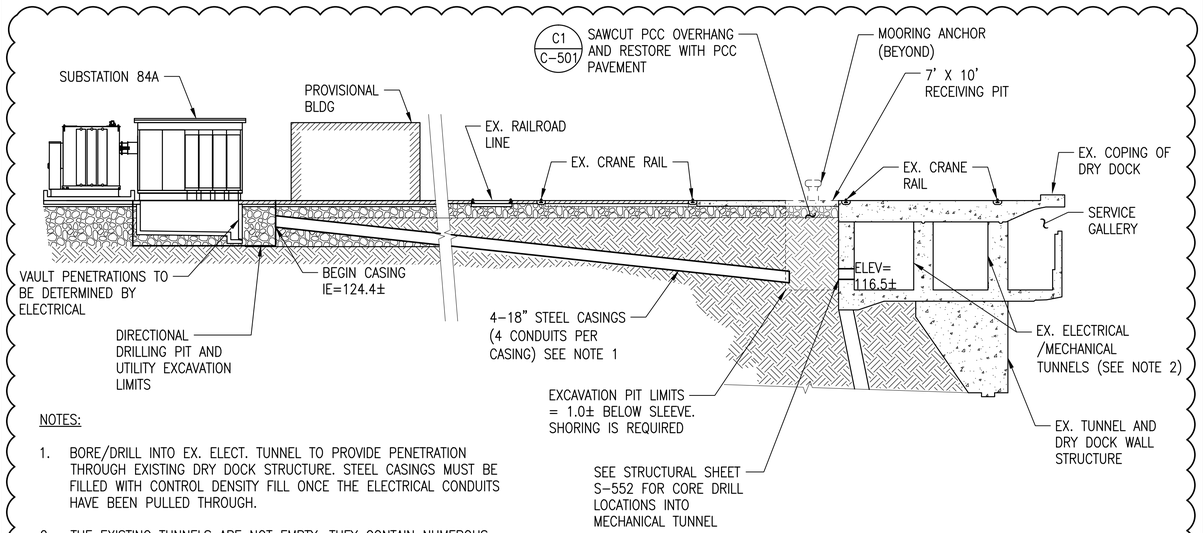

NOTES:

1. BORE/DRILL INTO EX. ELECT. TUNNEL TO PROVIDE PENETRATION THROUGH EXISTING DRY DOCK STRUCTURE. STEEL CASINGS MUST BE FILLED WITH CONTROL DENSITY FILL ONCE THE ELECTRICAL CONDUITS HAVE BEEN PULLED THROUGH.
2. THE EXISTING TUNNELS ARE NOT EMPTY. THEY CONTAIN NUMEROUS UTILITIES AND APPURTENANCES. SOME OF THESE ARE TO REMAIN AND SOME ARE TO BE REMOVED. SEE MECHANICAL AND ELECTRICAL PLANS AND DETAILS.
3. THE SUBSURFACE MATERIAL HATCH SHOWN IS FROM RECORD DRAWINGS AND MAY NOT BE WHAT WILL BE ENCOUNTERED. THE EXACT MATERIALS TO BE ENCOUNTERED MUST BE DETERMINED BY THE CONTRACTOR.

1" = 10', HORIZONTAL & VERTICAL

0 10 20 30

SUBSTATION 84A - WEST SECTION (C1)

2 SCALE: 1"=10' C-402

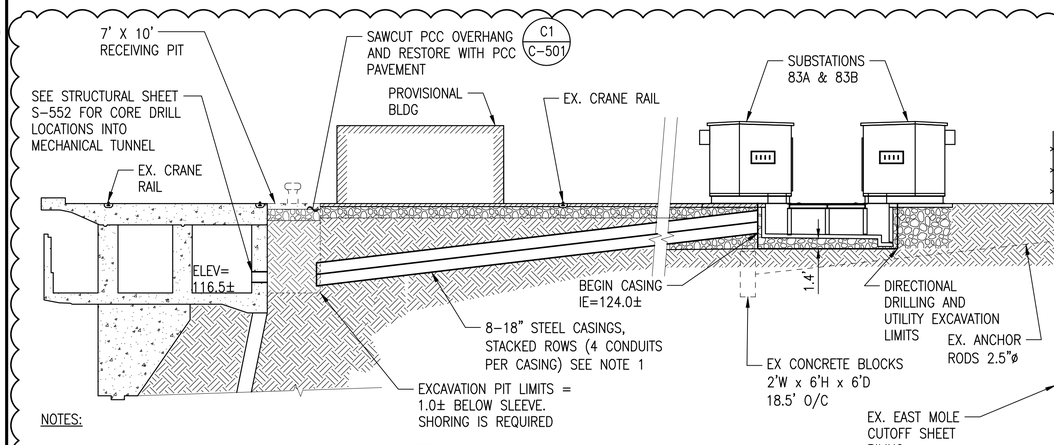

NOTES:

1. BORE/DRILL INTO EX. ELECT. TUNNEL TO PROVIDE PENETRATION THROUGH EXISTING DRY DOCK STRUCTURE. STEEL CASINGS MUST BE FILLED WITH CONTROLLED DENSITY FILL ONCE THE ELECTRICAL CONDUITS HAVE BEEN PULLED THOUGH.
2. THE EXISTING TUNNELS ARE NOT EMPTY. THEY CONTAIN NUMEROUS UTILITIES AND APPURTENANCES. SOME OF THESE ARE TO REMAIN AND SOME ARE TO BE REMOVED. SEE MECHANICAL AND ELECTRICAL PLANS AND DETAILS.
3. CONTRACTOR MUST FIELD LOCATE THE EXISTING CONCRETE BLOCKS AND ANCHORS BOTH HORIZONTALLY AND VERTICALLY PRIOR TO EXCAVATION. SEE PW DWG #40073 FOR MORE INFORMATION ON LOCATION.

1" = 10', HORIZONTAL & VERTICAL

0 10 20 30

SUBSTATION 83A / 83B EAST SECTION (C3)

2 SCALE: 1"=10' C-403

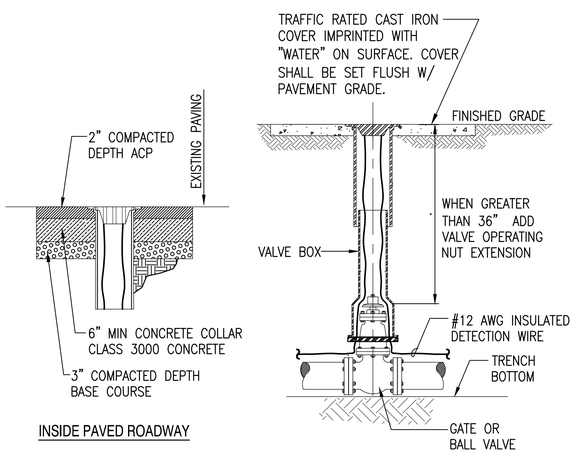

INSIDE PAVED ROADWAY

VALVE AND VALVE BOX DETAIL (A1)

NTS C-401

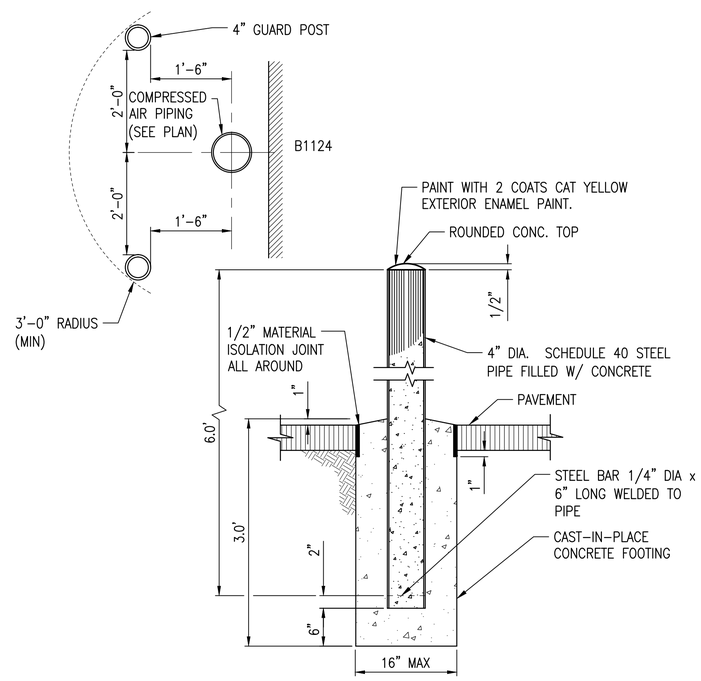

GUARD POST DETAIL (A2)

NTS CP101, CP106

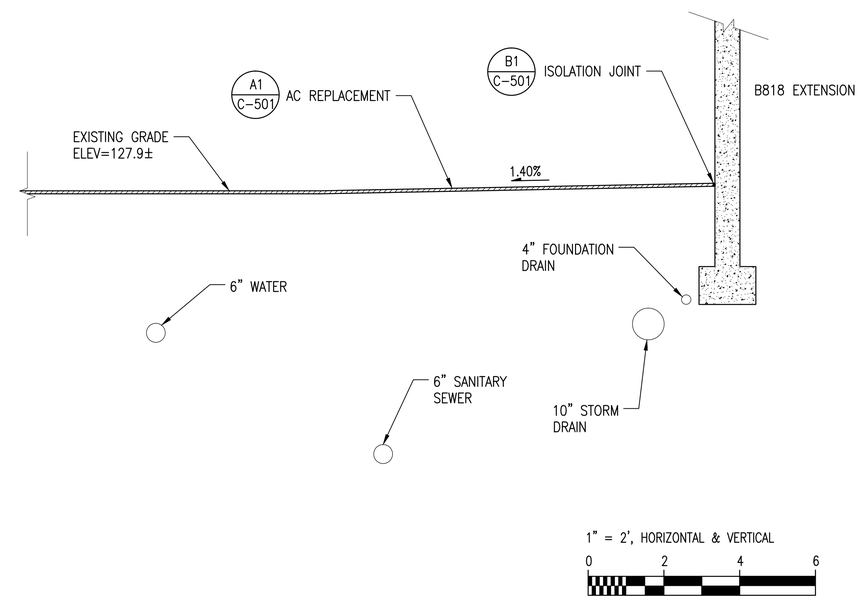

1" = 2', HORIZONTAL & VERTICAL

0 2 4 6

BUILDING SECTION (A3)

SCALE: 1"=2' C-201, C-501

2	AMENDMENT 0004	5-02-16	SDM
STM	DESCRIPTION	DATE	APPR

NAVFAC

DAVID E. SCHWARTZ STATE OF WASHINGTON 25446 REGISTERED PROFESSIONAL ENGINEER

SEAL

kpff 1601 5th Avenue, Suite 1600 Seattle, WA 98101 206.622.5822 www.kpff.com

A/E INFO

APPROVED

FOR COMMANDER NAVFAC

ACTIVITY

SATISFACTORY TO DATE

DES SDM DRW AST CHK DES

PM/DM: J. SHEPARD / L. ANDERSEN

BRANCH MANAGER: J. KISIDAY

CHIEF ENG/ARCH: B. GALLOWAY

FIRE PROTECTION: B. NIXON

DEPARTMENT OF THE NAVY
NAVAL FACILITIES ENGINEERING COMMAND
NAVAL FACILITIES ENGINEERING COMMAND ~ NORTHWEST
NAVAL STATION - SILVERDALE, WASHINGTON
BPT
NAVAL BASE KITSAP - PSNS & IMF
BREMERTON, WA
FY-16 MCON PROJECT P-431
DD-6 MODERNIZATION & UTILITY SITE IMPROVEMENTS
DETAILS

SCALE: 1

EPROJECT NO.: 1355285

CONSTR. CONTR. NO. N44255-XX-X-XXXX

NAVFAC DRAWING NO./PWD NO. 16034496/80750

SHEET 44 OF 248

C-506

DRAWFORM REVISION: 10 MARCH 2009

FILE NAME: Z:\115000-115499\115201 (cbk bremerton dd6)\CADD\Design\P431-DD06-C-501-DT.dwg LAYOUT NAME: C-506 Details PLOTTED: Monday, May 02, 2016 - 11:09am USER: kurtp

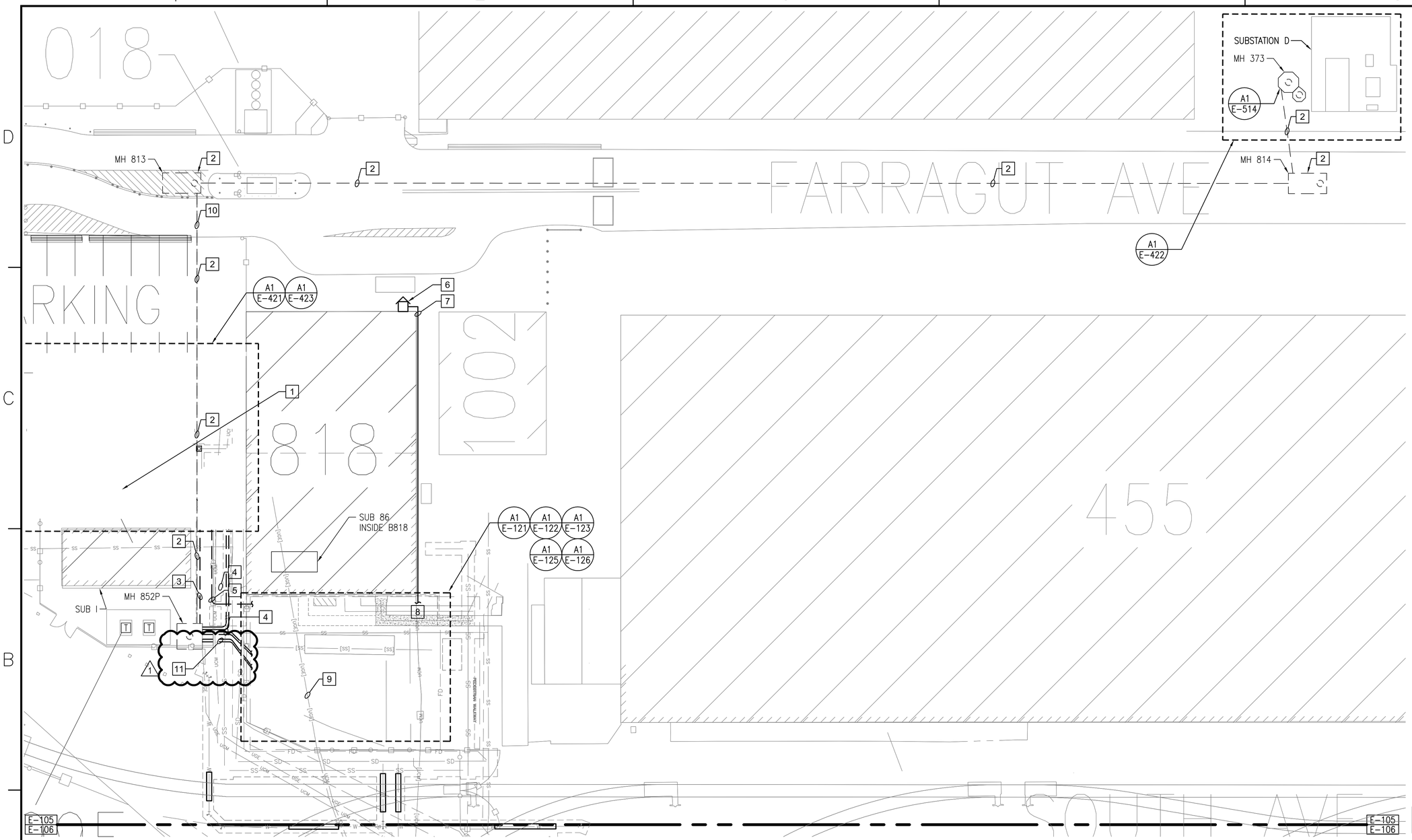

GENERAL NOTES:

1. FOR SYMBOLS AND ABBREVIATIONS REFER TO SHEET E-001 & E-002.

SHEET KEYNOTES:

1. NEW SUBSTATION N.
2. CLEAN AND RE-USE EXISTING DUCTS IN DUCT BANK FROM SUBSTATION D TO MH 852P.
3. NEW DUCTS FOR CIRCUIT 4013 FROM MH 852P TO NEW 15KV SWITCHGEAR.
4. DUCTS FOR 4.16KV CIRCUIT TO MCC IN AIR COMPRESSOR BUILDING.
5. DUCTS FOR 480V SERVICE AND TO NEW AIR COMPRESSOR BUILDING.
6. BUILDING MASTER CALL BOX #462. PROVIDE SHUNT-TRIP MODULE IN EXISTING MASTER CALL BOX.
7. ROUTE CONDUIT FROM MASTER CALL BOX TO NEW FACP IN ADDITION. CONDUIT TO BE ROUTED 12" ABOVE WINDOW HEADER, APPROXIMATELY 15-0" AFF.
8. FOR CONTINUATION, SEE SHEET E-125.
9. EXISTING PRIMARY ELECTRICAL SERVICE BETWEEN SUBSTATION 86 AND MH191 TO REMAIN UNDISTURBED.
10. PROVIDE WIRING AND CONNECTION TO EXISTING SYSTEM GROUND. SEE SHEET E-625 FOR SIZING.
11. COMMUNICATIONS DUCTS.

SITE PLAN - AREA E

SCALE: 1"=20'-0"

1" = 20'-0"

0 20 40 60

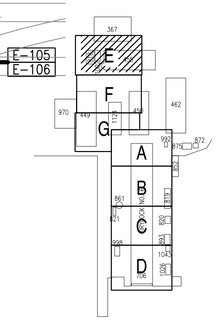

KEY PLAN

SCALE: NONE

STM	DESCRIPTION	DATE	APPR
1	AMENDMENT 004	5-2-16	DES

NAVFAC

DOUGLAS C. BUSHARD, STATE OF WASHINGTON, 40923, REGISTERED PROFESSIONAL ENGINEER, SEAL

Wood Harbinger
3009 112th Ave NE, Suite 100
Bellevue WA 98004
425.628.6000
woodharbinger.com
A/E INFO

APPROVED

FOR COMMANDER NAVFAC

ACTIVITY

SATISFACTORY TO DATE

DES: DES DRW: CN CHK: DCB

PM/DM: J. SHEPARD/L. ANDERSEN

BRANCH MANAGER: S. TEICHMANN

CHIEF ENG/ARCH: B. GALLOWAY

FIRE PROTECTION: B. NIXON

DEPARTMENT OF THE NAVY
NAVAL FACILITIES ENGINEERING COMMAND
NAVAL FACILITIES ENGINEERING COMMAND ~ NORTHWEST
NAVAL BASE KITSAP – PSNS & IMF
NAVAL STATION – SILVERDALE, WASHINGTON
BREMERTON, WA

FY-16 MCON PROJECT P-431
DD-6 MODERNIZATION & UTILITY SITE IMPROVEMENTS

SITE PLAN – AREA E

SCALE: 1"=20'-0"

EPROJECT NO.: 1355285

CONSTR. CONTR. NO.: N44255-XX-X-XXXX

NAVFAC DRAWING NO./PWD NO.: 16034638/80892

SHEET 186 OF 248

E-105

DRAWFORM REVISION: 10 MARCH 2009

FILE NAME: G:\2010\10090\05 P431 DD6\DWG\E\80892_E-105 PLOTTED: Monday, May 02, 2016 - 6:26am USER: cnelson LAYOUT NAME: 80892_E-105.dwg

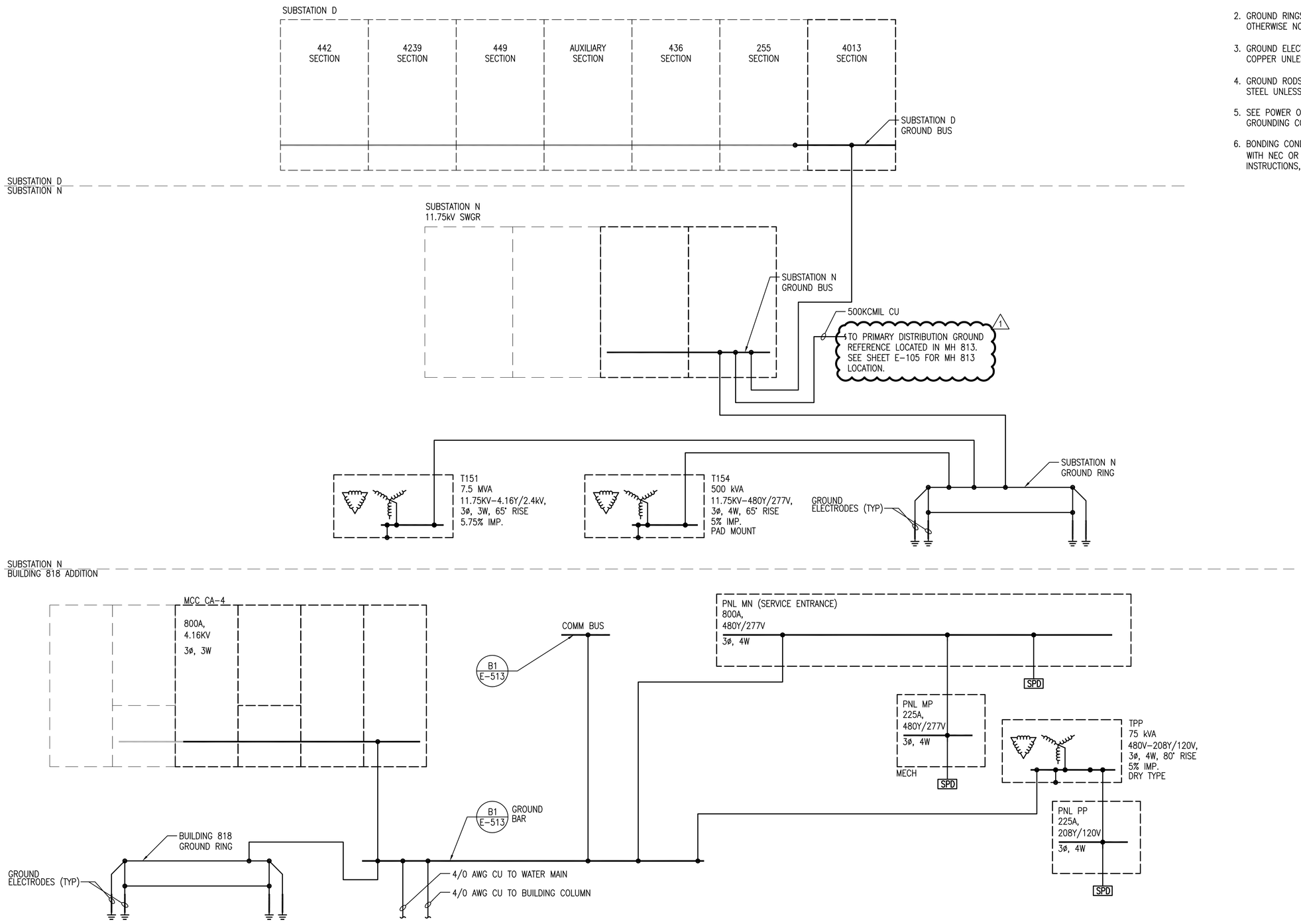

DIAGRAM - SUB D, SUB N, COMPRESSOR BUILDING GROUNDING

SCALE: NONE

A1

GENERAL NOTES:

1. FOR SYMBOLS AND ABBREVIATIONS REFER TO SHEET E-001 & E-002.
2. GROUND RINGS SHALL BE 4/0 AWG COPPER UNLESS OTHERWISE NOTED.
3. GROUND ELECTRODE CONDUCTORS SHALL BE 4/0 AWG COPPER UNLESS OTHERWISE NOTED.
4. GROUND RODS SHALL BE 3/4" X 8' COPPER CLAD STEEL UNLESS OTHERWISE NOTED.
5. SEE POWER ONE-LINE DIAGRAMS FOR EQUIPMENT GROUNDING CONDUCTORS.
6. BONDING CONDUCTORS SHALL BE SIZED IN ACCORDANCE WITH NEC OR MANUFACTURER'S INSTALLATION INSTRUCTIONS, WHICHEVER IS LARGER.

SYM	DESCRIPTION	DATE	APPR
1	AMENDMENT 004	5-2-16	DES

NAVFAC

DOUGLAS C. BUSHARD, STATE OF WASHINGTON, 40923, REGISTERED PROFESSIONAL ENGINEER — SEAL

Wood Harbinger
3009 112th Ave NE, Suite 100
Bellevue WA 98004
425.628.6000
woodharbinger.com
A/E INFO

APPROVED
FOR COMMANDER NAVFAC
ACTIVITY
SATISFACTORY TO DATE

DES: DES DRW: CN CHK: DCB
PM/DM: J. SHEPARD/L. ANDERSEN
BRANCH MANAGER: S. TEICHMANN
CHIEF ENG/ARCH: B. GALLOWAY
FIRE PROTECTION: B. NIXON

DEPARTMENT OF THE NAVY
NAVAL FACILITIES ENGINEERING COMMAND
NAVAL FACILITIES ENGINEERING COMMAND ~ NORTHWEST
NAVAL STATION - SILVERDALE, WASHINGTON
IPT NAVAL BASE KITSAP - PSNS & IMF
BREMERTON, WA
FY-16 MCON PROJECT P-431
DD-6 MODERNIZATION & UTILITY SITE IMPROVEMENTS
DIAGRAM - SUB D, SUB N, COMPRESSOR BUILDING GROUNDING

SCALE: NTS
EPROJECT NO.: 1355285
CONSTR. CONTR. NO.: N44255-XX-X-XXXX
NAVFAC DRAWING NO./PWO NO.: 16034692/80946
SHEET 240 OF 248

E-625

DRAWFORM REVISION: 10 MARCH 2009

FILE NAME: G:\2010\10980\05 P431 DD6\DWG\E\80946_E-625.dwg LAYOUT NAME: 80946_E-625 PLOTTED: Monday, May 02, 2016 - 6:27am USER: cnelson