INVITATION FOR BID
FOR LEASE OF LAND FOR AGRICULTURAL PURPOSES AT NAVAL AIR STATION, LEMOORE, CALIFORNIA
January 7, 2015

1. This Invitation for Bid consists of four parts:
    a. Invitation for Bid (IFB)
    b. Instructions to Bidders – Attachment #1
    c. Department of the Navy Lease for Agricultural Purposes – Attachment #2
    d. Bid Form – Attachment #3

2. LOCATION

The Department of the Navy proposes to lease Government-owned land for agricultural purposes at the following parcel of real property at the Naval Air Station, Lemoore, California (hereinafter called the Station) under the terms outlined below.

Parcel	Acres	IFB Number	Lease Term
4A29	+/- 292.3	N6247315RP052	February 1, 2015- December 31, 2019

3. BIDS

a) Bid package and instructions will be posted electronically on Navy Electronic Commerce Online (NECO) by parcel number. Interested bidders can view bid package by parcel number and, if interested, print the bid package and instructions. Interested bidders will then complete the bid form and return under the Sealed Bid process. Bid documents for proposed lease are

also available from Ms. Kimberly Spencer, Realty Specialist, Code JV10.KS, (619) 532-3918, Naval Facilities Engineering Command Southwest (NAVFAC SW), 1220 Pacific Highway, Building 130, San Diego, California, 92132-5190.

b) Sealed bids must be received by **2:00 P.M., Pacific Daylight Time (PDT), on January 7, 2015**, at the Naval Facilities Engineering Command Southwest, 1220 Pacific Highway, San Diego, California 92132-5190. Bid opening shall begin promptly at **2:00 p.m. PDT on January 7, 2015** at the Naval Facilities Engineering Command Southwest in the Building 127 conference room on the 1st Floor. Bids shall be submitted in the manner described in the INSTRUCTIONS TO BIDDERS, Attachment #1 of this Bid Package. Particular attention must be paid to the Instructions to Bidders. Bidders must meet the requirements of this Bid Package and attachments hereto. Obligations of a bidder include submission of a deposit with the bid. FAX COPIES OF BIDS WILL NOT BE CONSIDERED RESPONSIVE.

c) If your firm intends to attend the Sealed Bidding in person, please contact the Realty Specialist no later than **2:00PM on January 6, 2015**. There are no parking spaces allocated for Sealed Bidding, thus allowance time for public parking and walking to NAVFAC SW must be taken into account. All NAVFAC SW visitors must sign in at the Security Office and be escorted on and off the premises.

4. AMENDMENTS TO INVITATIONS FOR BIDS

a) If this solicitation is amended, then all terms and conditions which are not modified remain unchanged.

b) Bidders shall acknowledge receipt of any amendment to this solicitation (1) by signing and returning the amendment, (2) by identifying the amendment number and date in the space provided for this purpose on the form for submitting a bid.

Facsimile bids are NOT authorized in this solicitation. The Government must receive the acknowledgment by the time and at the place specified for receipt of bids.

5. FALSE STATEMENTS IN BIDS

a) Bidders must provide full, accurate, and complete information as required by this solicitation and its attachments. The penalty for making false statements in bids is prescribed in 18 U.S.C. 1001.

6. SUBMISSION OF BIDS

a) Bids and bid modifications shall be submitted in sealed envelopes or packages —

(1) Addressed to the office specified in Paragraph 3 of this solicitation; and
(2) Showing the time and date specified for receipt, the solicitation number, and the name and address of the bidder.
(3) Refer to Section 6 (a) of Instructions to Bidders for example.

b) Bidders using commercial carrier services shall ensure that the bid is addressed and marked on the outermost envelope or wrapper as prescribed in subparagraphs (a)(1) and (2) of this provision when delivered to the office specified in the solicitation.

c) Telegraphic bids will not be considered; however, bids may be modified or withdrawn by written or telegraphic notice.

d) Facsimile bids, modifications, or withdrawals, will not be considered.

7. EXPLANATION TO PROSPECTIVE BIDDERS

Any prospective bidder desiring an explanation or interpretation of the solicitation, drawings, specifications, etc., must request it in writing soon enough to allow a reply to reach all prospective bidders before the submission of their bids. Oral explanations or instructions given before the award of a Lease will not be binding. Any information given a prospective bidder concerning a solicitation will be furnished promptly to all other prospective bidders as an amendment to the solicitation, if that information is necessary in submitting bids or if the lack of it would be prejudicial to other prospective bidders.

8. LATE SUBMISSIONS, MODIFICATIONS, AND WITHDRAWALS OF BIDS

a) Bidders are responsible for submitting bids, and any modifications or withdrawals, so as to reach the Government office designated in this IFB by 2:00 P.M., Pacific Daylight Time (PDT), on **January 7, 2015**.

b) (1) Any bid, modification, or withdrawal received at the Government office designated in the IFB after the exact time specified for receipt of bids is "late" and will not be considered unless it is received before award is made, the Real Estate Contracting Officer determines that accepting the late bid would not unduly delay the acquisition; and—

(i) There is acceptable evidence to establish that it was received at the Government installation designated for receipt of bids and was under the Government's control prior to the time set for receipt of bids, Or

(ii) It was the only Bid received by the Government.

(2) However, a late modification of an otherwise successful bid that makes its terms more favorable to the Government, will be considered at any time it is received and may be accepted.

c) Acceptable evidence to establish the time of receipt at the Government installation includes the time/date stamp of that installation on the bid wrapper, other documentary evidence of receipt maintained by the installation, or oral testimony or statements of Government personnel.

d) If an emergency or unanticipated event interrupts normal Government processes so that bids cannot be received at the Government office designated for receipt of bids by the exact time specified in the IFB and urgent Government requirements preclude amendment of the IFB, the time specified for receipt of bids will be deemed to be extended to the same time of day specified in the solicitation on the first work day on which normal Government processes resume.

e) Bids may be modified or withdrawn by written or telegraphic notice provided that any such notice is received at the Government office prior to the **January 7, 2:00 P.M. PDT** bid opening. A bid may be withdrawn in person by a bidder or its authorized representative if, before the exact time set for receipt of bids, the identity of the person requesting withdrawal is established and the person signs a receipt for the bid.

9. LEASE AWARD—SEALED BIDDING

a) Bids will be accepted from any United States citizen, corporation, partnership, or trust. The Government will evaluate bids in response to this solicitation without discussions and will award a Lease to the responsible bidder whose bid, conforming to the solicitation, will be most advantageous to the Government considering the total bid for the initial Lease term plus all option periods.

b) The Government may—
(1) Reject any or all bids;
(2) Accept other than the highest bid; and
(3) Waive informalities or minor irregularities in bids received.
(4) Not award any or all Lease(s).

c) The Government may determine any Bidder not responsible, if Bidder, including any corporate officers, directors, shareholders, partners of partnership, or officers or members of business entity ("Principals") submitting bid, is in breach or default of a material provision of an existing or prior Lease at the time of evaluation of Bids under this solicitation.

10. PERIOD FOR ACCEPTANCE OF BIDS

All bids received shall be deemed continuing and valid offers from the date and time of opening of bids until award by the Government, provided such award takes place within sixty (60) days from the date of opening.

IMPORTANT NOTICES

BID DEPOSIT

Interested bidders must enclose with each individual Bid, **a deposit of 25% of the annual rent or $1,500.00**, **whichever is GREATER**, in the form of a certified check, cashier's check, or U.S. Postal Service Money Order payable to the "Disbursing Officer – DFAS Cleveland." The bidder should be named as the "remitter" on the deposit. CASH BID DEPOSITS WILL NOT BE ACCEPTED. BIDS SUBMITTED WITH A BID DEPOSIT in the form of a PERSONAL CHECK MAY BE REJECTED.

The deposit of a successful bidder will be retained by the Government and applied as partial payment of the first year's rent. In the event the deposit check of the successful bidder exceeds the first year's rent, the successful bidder shall submit the correct rental amount and the bid deposit check shall be returned upon execution of the Lease. Deposits of unsuccessful bidders will be returned without interest, as promptly as possible after award has been made to the successful bidder.

SOIL & WATER CONSERVATION WORK

The amount of the bid represents the annual cash rental to be paid under the Lease. In addition to rent, the successful bidder must complete, at Lessee's expense, all non-reimbursable soil and conservation work required for the leased parcel by the time specified in the Soil & Water Conservation Plan (Exhibit "B" of the Lease).

It is the intent of the Government that the land be utilized in accordance with sound agricultural practices and that the ecological balance be protected to insure continued productivity of the land while permitting reasonable economic returns to the Lessee. Protection of the Station's resources from deterioration, erosion, fire, weed, and insect infestations or other detriments is considered part of the sound agricultural management to be carried out by the Lessee. The Soil and Water Conservation Plan, Exhibit "B" to the Lease, is made a part of the Lease to accomplish those purposes.

RENTAL PAYMENTS

a. Rental payments shall be paid in advance by check or money order made payable to the "Disbursing Officer, DFAS-Cleveland" in the manner described in the lease, under . Checks must be issued by and drawn on the account of Lessee. If a check is not issued by and drawn on the account of the Lessee, the check will be returned to the Lessee and if a check issued by and drawn on the account of the Lessee is not received in accordance with the General Provisions, the payment will be deemed delinquent and interest will accrue. Rent payments are considered received the date that the Government receives the payment and not the date indicated on the check or money order. At the option of the Lessee, payments may be made in equal installments due on semi-annual or quarterly payment dates of each year. Frequency of payment must be indicated on the Bid Form and may not be changed without the written authorization of the Real Estate Contracting Officer.

b. As additional consideration, the Lessee hereby agrees to pay all land based charges (LBC) assessed by Westland's Water District, as required in the **RENT** clause of the Lease.

c. As additional consideration, the LESSEE hereby agrees to pay irrigation water surcharge payments in the amount of $87.00 per acre-foot of water allocated. LESSEE shall pay irrigation water surcharge payments to the GOVERNMENT as additional rent.

d. As additional consideration, and exclusively for parcels with a well located on and dedicated to the Leased premises, LESSEE shall pay all Groundwater Fee(s) as required by **Clause 5 (B) (2) (a) through (f) of the Soil and Water Conservation Plan.**

SECURITY DEPOSIT

To secure faithful performance of obligations and responsibilities under the Lease, the successful bidder will be required to provide the Government with a Security Deposit, as required by the **PERFORMANCE BOND OR SECURITY** clause of the Lease. The Security Deposit must be in an amount equal to **50% of the annual rent, or $5,000.00 (whichever is GREATER)** and may be in the form of either a Certificate of Deposit or a Performance Bond. The Security Deposit must be provided prior to Lease start date.

INSURANCE REQUIREMENTS

As required by the **RISK OF LOSS-INSURANCE** clause of the Lease, the successful bidder will be required to annually provide public liability and property damage insurance in the following minimum amounts:

$2,000,000	Third Party Property Damage
$3,000,000	Third Party Bodily Injury Per Person
$3,000,000	Third Party Bodily Injury Per Accident

Lessees will be required to provide their insurance policy showing all endorsements required under the **INSURANCE REQUIREMENTS** clause of the Lease. Interested bidders are cautioned that not all insurance companies are willing to comply with these requirements. Please check with your insurance provider to ensure that they are able to comply with all of the required endorsements prior to submission of a bid. If the high bidder fails to comply with this or any other requirement, the lease will not be executed and the bid deposit will not be returned.

BID REJECTIONS AND AWARD

Collusion of the bid process is strictly prohibited by federal laws and regulations. The Real Estate Contracting Officer is required by 10 U.S.C. 2305(b)(9) to report to the Attorney General of the United States any bids or proposals that evidence a violation of the antitrust laws. The Navy reserves the right to reject any and all Bids if the Navy determines that bidder collusion has occurred.

a. The Government reserves the right to reject Bids.

b. The Government reserves the right not to award any or all Lease(s).

ASSIGNMENT OR SUBLETTING

Per the **ASSIGNMENT OR SUBLETTING** clause of the Lease, assignments will not be allowed. Any modification(s) to the Lease will be at the sole discretion of the Government. Subleases may be allowed but must be approved in advance and in writing.

BID EXECUTION

By executing (signing) the Bid Form, bidder warrants and represents to the Government that bidder has read, understands, and accepts all of the terms and conditions of the Lease. By executing the Bid, bidders also acknowledge that rejecting or withdrawing a bid after acceptance of a bid by the Government constitutes a default, which may result in the Government determining the bidder non-responsible and not eligible to participate in any future Navy agricultural lease Invitations to Bid. Bidders will execute their bid by completing the appropriate blanks on the attached Department of Navy Lease For Agricultural Purposes Bid Form, and returning same in accordance with the attached Instructions to Bidders.

POSSESSORY INTEREST TAX

Where applicable, the leasehold interest in Government-owned land may be subject to State and local taxation as a possessory interest in tax exempt real property. The amount of assessment to be charged to the Lessee is determined by the County Assessor. Such taxes are the sole responsibility and liability of the Lessee.

INSTRUCTIONS TO BIDDERS

1. Eligibility to Bid On And Award Leased Parcels. Bids will be accepted from any United States citizen, corporation, partnership, or trust. The Government will evaluate bids in response to this solicitation without discussions and will award a Lease to the responsible bidder whose bid, conforming to this solicitation, will be most advantageous to the Government considering the total bid for the initial Lease term plus all option periods. The Government may determine any bid non-responsive, where submitted by a person or entity, who is in breach or default of a material provision of an existing or prior Lease at the time of evaluation of Bids under this solicitation.

2. Review of All Documents. Interested bidders shall review all documents, provisions, clauses and terms of the Invitation for Bid (IFB) and of each proposed Lease on which interested bidders are bidding and all exhibits and attachments prior to submitting a Bid, as they will be strictly enforced.

Inquiries regarding the IFB shall be submitted electronically via e-mail. The Point of Contact (POC) for inquiries is Kimberly Spencer, Realty Specialist, at kimberly.spencer@navy.mil. The Government does not intend to respond to inquiries submitted less than ten (10) calendar days before the bid due date.

3. Bid Form

a. Interested bidders shall print out and complete the two-page Bid Form (for purposes of this IFB, “Bid Form” or “Bid ”), attached to this IFB as Attachment #3.

b. For a bid to be considered responsive, the following information must be included on the completed Bid Form.

Page One of Bid Form:

1. Name of Lessee
2. a. Rental Amount per acre per year
   b. Amount of Annual Rent
   c. Payment Cycle: annual, semi-annual, or quarterly
3. Amount of Bid Deposit (25% of annual bid amount or $1,500.00 whichever is GREATER)

Page Two of Bid Form:

- Name of Lessee
- Names of all Corporate officers, directors, shareholders, partners of partnership, officers or members of other business entity submitting bid, if applicable.
- Tax Identification Number
- Mailing Address
- FedEx Mailing Address
- Home Telephone Number
- Mobile Number
- 24 Hour Emergency Telephone
- Alternate 24 Hour Emergency Name & Telephone

- E-mail Address
- Fax Number
- Executed (Signature) of Lessee or Authorized person and Title
- Date
- Lessee signature
- Signature of Corporate Secretary and Corporate Seal, if applicable

4. Bid Execution

BIDDER: The Bid Form must be filled out completely, executed (signed), and dated by bidder. The following special requirements must be addressed if the interested bidder is a(n):

ATTORNEY/AGENT: A bid executed by an attorney or agent on behalf of the bidder shall be accompanied by a power of attorney or other evidence of authority to act on behalf of the bidder.

CORPORATION: If the bidder is a corporation, partnership or other business entity, the bid must be executed by an authorized officer, representative, or Attorney/Agent of the corporation, partnership or other business entity. The corporation, partnership or other business entity submitting a bid must provide the names of all shareholders, directors and officers of a corporation, partners of partnership or officers or members of any other business entity.

MINOR: Bids of a minor must be executed and submitted on behalf of the minor by the minor's guardian. Evidence of guardianship must accompany the bid if the guardian is someone other than the natural parent.

5. Bid Deposit

a. Interested bidders must enclose with each individual Bid, **a bid deposit of 25% of the annual rent or $1,500.00, whichever is GREATER**, in the form of a certified check, cashier's check, or U.S. Postal Service Money Order payable to the "**Disbursing Officer – DFAS Cleveland**." The bidder should be named as the "remitter" on the deposit. CASH BID DEPOSITS WILL NOT BE ACCEPTED. BIDS SUBMITTED WITH A BID DEPOSIT in the form of a PERSONAL CHECK MAY BE REJECTED.

b. The deposit of a successful bidder will be retained by the Government and applied as partial payment of the first year's rent. In the event the deposit check of the successful bidder exceeds the first year's rent, the successful bidder shall submit the correct rental amount and the bid deposit check shall be returned upon execution of the Lease. Deposits of unsuccessful bidders will be returned without interest, as promptly as possible after award has been made to the successful bidder.

c. In the event an interested bidder intends to bid on multiple leases, individual bid deposits must be submitted for each Lease.

6. Submission of a Bid.

Per Paragraph 6 of the IFB, the Bid must be submitted in a SEALED ENVELOPE or package, marked and addressed as in the following example:

[Bidder name and address here]

Naval Facilities Engineering Command Southwest
Attn: Ms. Kimberly Spencer, Desert IPT Real Estate, JV10.KS
1220 Pacific Highway, Bldg 130
San Diego, CA 92132-5190

Bid For:
Naval Air Station, Lemoore, California
Agricultural Lease N6247315RP00052
Parcel 4A29

To Be Opened:
2:00 p.m., Pacific Daylight Time (PDT)
January 7, 2015

Each bid must be submitted individually in a sealed envelope or package, as described Paragraph 6 of the IFB, and shown in the sample above.

7. Bidder's Check List

- Completed BID FORM (Attachment #3)
- Bid deposit
- Bid and bid deposit are submitted in a SEALED envelope or package no later than time and date specified

Station: NAS Lemoore, California
Parcel #: 4A29
Contract #: N6247315RP00052

DEPARTMENT OF THE NAVY
LEASE FOR AGRICULTURAL PURPOSES

LEASE between _____hereinafter called "LESSEE," and the United States of America, acting by and through the Department of the Navy, represented by the Commanding Officer, Naval Facilities Engineering Command Southwest, San Diego, California, hereinafter called the "GOVERNMENT."

1) **LEASED PROPERTY**: Under the terms and conditions of this "LEASE," the GOVERNMENT hereby leases to the LESSEE a portion of the NAVAL AIR STATION, LEMOORE, CALIFORNIA, hereinafter called the "STATION". That portion is hereinafter called the "LEASED PROPERTY" and is described as follows:

   a) Parcel 4A29**,** consisting of approximately 292.3 acres, is identified and delineated in Exhibit "A," attached hereto and made a part hereof.

2) **TERM**: The term of this LEASE will be for the period beginning February 1, 2015 and ending on December 31, 2019 UNLESS sooner terminated in accordance with Clauses 12 and 13 hereof.

3) **RENT**: LESSEE shall pay the GOVERNMENT rent in the amounts set forth below:

   292.3 +/- Rent/Acre/Year _____ Annual Rent _____

   a) LESSEE agrees to pay the GOVERNMENT an annual rental payment in the amount of $_____ payable in advance at the rate of $_____ **per** annum, semi-annum, quarterly (circle one) by check or postal money order made payable to the **Disbursing Officer – DFAS Cleveland** and delivered to the Real Estate Contracting Officer, subject to any allowance for credit for work approved and performed pursuant to Clause 7 of this LEASE. Rental payments are acknowledged by the GOVERNMENT according to the date that the payment is received.

   b) As additional consideration, the LESSEE also hereby **agrees to pay** all land based charges assessed by Westlands Water District (WWD) assessed at any time during this LEASE term, regardless of the amount of irrigation waters delivered to this parcel.

   c) As additional consideration, the LESSEE hereby agrees to pay irrigation water surcharge payments in the amount of $87.00 per acre-foot of water allocated. LESSEE shall pay irrigation water surcharge payments to the GOVERNMENT as additional rent.

4) **USE**:

   The primary use of the STATION is for Naval Flight operations. The agricultural LEASE operation is secondary and subject to the military requirements for the land. The LEASED PROPERTY shall be used solely for agricultural purposes. Human occupancy is not allowed.

Commercial wholesale or retail sales operations are not allowed on the STATION. It is the express intent of the GOVERNMENT not to let the land lay fallow, but rather to have the available irrigation waters used to the maximum extent possible with sound agricultural practices. All use of the LEASED PROPERTY must be in accordance with the Soil and Water Conservation Plan for Agricultural Outlease, Exhibit "B," attached hereto and made a part hereof. All uses of the lands of the STATION shall be in accordance with and in full compliance with all applicable federal, state and local environmental laws, regulations and/or ordinances, including but not limited to laws, regulations and/or ordinances concerning air emissions, water pollution prevention, and permitting requirements.

5) **PERFORMANCE BOND OR SECURITY**:

To secure the faithful performance of LESSEE'S obligations hereunder, LESSEE shall provide the GOVERNMENT with a security deposit in the amount equal to **50% of the annual rent shown in Clause 3** (a) or **$5,000.00**, whichever is **GREATER**. If the GOVERNMENT shall at any time determine that an increase in the amount of security is necessary to make same commensurate with LESSEE's obligations hereunder, LESSEE shall furnish additional security promptly upon request. The Security Deposit provided shall be in the form of either:

a) Certificate of Deposit:

   i. Certificate of Deposit shall be accompanied by a Security Agreement, as provided by the Government, fully executed by LESSEE and GOVERNMENT AND acknowledged by the financial institution issuing the Certificate of Deposit; and

   ii. Certificate of Deposit shall be made payable to the Lessee and the "Department of the Navy"; or

b) Performance Bond issued by a Corporate Surety and satisfactory to the GOVERNMENT in all respects.

   i. Performance Bond shall be payable to the "Treasurer of the United States."

If LESSEE shall fully and faithfully comply with all the terms and conditions of this LEASE, the security deposit shall be returned to the LESSEE upon the expiration or earlier termination of the LEASE.

6) **INSURANCE REQUIREMENTS**:

Prior to award of the LEASE, the LESSEE shall submit a certificate of insurance meeting the following requirements. Public Liability and Property Damage shall meet the following requirements at a minimum:

$2,000,000	Third Party Property Damage
$3,000,000	Third Party Personal Injury Per Person
$3,000,000	Third Party Personal Injury Per Accident

The policy/certificate of insurance shall contain the following endorsements:

a) The insurer waives any right of subrogation against the United States of America which might arise by reason of any payment made under this policy.

b) The GOVERNMENT shall be given thirty (30) days written notice prior to making any material change in or the cancellation of the policy. Please strike out (and initial) any clauses that state "…failure to make such notice imposes no obligation or liability of any kind upon the company, etc…"

c) The United States of America (Department of the Navy) is added as an additional insured in operations of the policyholder at or from the LEASED PROPERTY at Naval Air Station, Lemoore, California.

d) This insurance certificate is for use of the LEASED PROPERTY at Naval Air Station, Lemoore, California, Contract Number **N6247315RP00052** for **Parcel 4A29.**

e) If, at any time, the GOVERNMENT determines that the insurance maintained by the LESSEE does not in fact adequately protect the GOVERNMENT, LESSEE may be required to carry such other insurance in such form, for such amounts and for such periods of time, and with such insurers as the GOVERNMENT may from time to time require or approve.

7) **CONSERVATION AND MAINTENANCE WORK**:

a) The LESSEE, shall at their own cost and expense, assume full responsibility for the following conservation and maintenance obligations in accordance with the specifications and guidelines set forth in Clauses 6 (a) (1) through (21) of the Soil and Water Conservation Plan of this LEASE, attached hereto as Exhibit "B."

b) The LESSEE agrees to perform reimbursable Conservation and Maintenance related work as approved or directed by the GOVERNMENT. Upon prior approval and subsequent completion of such work and the acceptance of same by the GOVERNMENT, the LESSEE shall receive payment in full for the "Actual Costs" of work performed, or shall receive rent credit in the same amount against rents payable under the terms of this LEASE; provided, however, that in no event shall such rent credit exceed the total amount of cash rent called for in the LEASE.

c) "Actual Costs" as used herein shall mean the sum of:

i) direct labor costs, and;

ii) direct material costs, when LESSEE has incurred such costs directly in the performance of any Conservation and Maintenance Work approved or directed by the Real Estate Contracting Officer. When LESSEE contracts with third parties for performance of any item of Conservation and Maintenance Work, "Actual Costs" as used herein, shall mean the amount of such contracts that have been approved in advance by the Real Estate Contracting Officer.

d) Prior to commencement of any Conservation and Maintenance Work for which the LESSEE is to receive credit or payment from the GOVERNMENT, the LESSEE must have a Modification of Contract executed by the Real Estate Contracting Officer setting forth the terms, conditions and the amount of compensation to be paid upon completion of the reimbursable work to the satisfaction of the GOVERNMENT. The following procedures apply:

i) GOVERNMENT provides LESSEE with project specifications and written notice to obtain bids.

ii) LESSEE obtains a minimum of two bids from qualified contractors and forwards such bids to the Real Estate Contracting Officer. LESSEE may elect to do the work him/herself, and LESSEE then must submit to the Real Estate Contracting Officer an itemized bid proposal covering all aspects of the project. In the event the LESSEE elects to do the work him/herself, no other bids are necessary, provided that the LESSEE's bid price does not exceed the GOVERNMENT'S cost estimate. For each project or service proposed, LESSEE must include with the project or service description an estimated cost to perform the work. The estimated cost shall be broken down by material, subcontract cost, labor, and overhead.

iii) Nothing in this LEASE shall preclude the LESSEE from contracting with a third-party contractor for the work. LESSEE shall require any contractor to have a Performance Bond with the penal amount of no less than the estimated cost of the work contracted for. In compliance with Clause 32 (d) (i) of this LEASE, LESSEE shall be solely responsible for obtaining any environmental permits required for the proposed work. Copies of all required environmental and/or construction permits shall be provided to the GOVERNMENT prior to execution of work.

iv) GOVERNMENT shall review the bids (or single bid proposal if LESSEE elects to do the work him/herself), and if acceptable the GOVERNMENT shall enter into a Modification of Contract with LESSEE authorizing the project. The GOVERNMENT will retain the right to perform a technical review of any proposed work to be performed or personal property to be provided. A GOVERNMENT representative may oversee the work solely for the benefit of the GOVERNMENT, and such GOVERNMENT representative shall confirm satisfactory completion of the work to the Real Estate Contracting Officer. IN NO CASE SHALL LESSEE BEGIN ANY PROJECT WORK PRIOR TO RECEIVING A FULLY EXECUTED MODIFICATION OF LEASE THEREFORE.

v) A “not to exceed cost ceiling” will be established in the Modification of Contract for the reimbursable project. The Real Estate Contracting Officer may, upon written request, with supporting rational from the LESSEE, increase the “not to exceed cost ceiling.” Such request for an increase in said amount must be submitted, in writing, prior to incurring any cost in excess of the said amount and sufficiently in advance to provide for GOVERNMENT review of the request and, in any event, not less than ten (10) days prior to the date authorization is required. The LESSEE shall not be obligated to incur costs in excess of the “not to exceed cost ceiling.”

vi) Upon receipt of a fully executed Modification of Contract, LESSEE shall begin work coordinating all details of the work including starting dates and times, and the location of the work with the STATION Point of Contact (POC), listed in this LEASE in 34 (a) (ix) (c).

vii) Upon completion of the work, the LESSEE shall submit to the GOVERNMENT an invoice signed by the LESSEE stating the full amount due for the work performed, together with all supporting documents, all bills of sale; receipts for labor and materials used in connection with the project; and in the event the LESSEE performed the work, an itemized bill for all labor and materials.

viii) The incurred cost of performing such project or service will be subject to GOVERNMENT audit and should such audited allowable cost be less than the "not to exceed cost ceiling" amount authorized, then the amount of reimbursement or credit towards rent reduction to LESSEE shall be the audited, allowable incurred cost.

ix) The GOVERNMENT shall inspect the work for adherence to specifications and quality of workmanship, and will review the receipts and bills of sale for adherence to the previously approved bid estimates. The Real Estate Contracting Officer must provide a written final acceptance of the work performed in order for LESSEE to obtain rent reduction credit for the work performance, or reimbursement for actual costs. If the project is acceptable, the Real Estate Contracting Officer will make arrangements for appropriate rental credit or reimbursement to the LESSEE in accordance with applicable provisions of this LEASE.

x) Any bills of sale, purchase receipts, written warranty agreements and other indicia or documents of ownership shall be provided to the GOVERNMENT upon its acceptance of the improvement or personal property. Written warranties shall include but not be limited to a warranty that work performed conforms to the contract requirements and is free of any defect in equipment, material or design furnished or workmanship performed, and that the LESSEE or LESSEE's contractor will remedy any failure to conform or any defect. Additionally, warranty shall provide that LESSEE or LESSEE's contractor shall remedy any damage to GOVERNMENT owned or controlled real or personal property when that damage results from either contractor failure to conform to contract requirements or any defect of equipment, material, workmanship or design furnished. All warranties shall name the GOVERNMENT as an additional beneficiary. LESSEE shall enforce all warranties for the benefit of the GOVERNMENT, if directed to do so by the GOVERNMENT.

xi) Upon termination of this LEASE pursuant to Clauses 12 and 13, hereof, a final accounting will be performed and the balance of any rent accrued and payable to the GOVERNMENT will be due on demand. Notwithstanding termination, the GOVERNMENT reserves the right to have a final accounting at any time during the course of the LEASE, and to request that the value of any rent accrued up to that date and not already contractually obligated to any specific project or service to be performed, be paid to the GOVERNMENT on demand. Upon termination, at the GOVERNMENT'S option, LESSEE shall complete any work or service already contracted for, or if otherwise directed by GOVERNMENT, cease all project work, terminate any contract(s) for such work, and pay all accrued rent.

xii) All improvements constructed or installed under this clause are the property of the GOVERNMENT and shall remain in place and intact upon the expiration or earlier termination of this LEASE. Should the LESSEE fail to perform such work (either him/herself or via a contract), the GOVERNMENT may arrange for the work to be completed and LESSEE shall be required to reimburse the GOVERNMENT for costs incurred.

8) **GENERAL MAINTENANCE OBLIGATION:** LESSEE, at its own expense, shall so protect, preserve, maintain and repair the LEASED PROPERTY, that the same will at all times be kept in at least as good condition as when received, less ordinary wear and tear and/or loss or damage for which LESSEE is not specifically liable hereunder.

9) **RISK OF LOSS-INSURANCE:**

a) LESSEE shall bear all risk of loss of or damage to the LEASED PROPERTY arising from any cause whatsoever, with or without fault by LESSEE; Provided, however, that LESSEE's liability for any loss or damage resulting from risks expressly required to be insured against under the LEASE shall not exceed the amount of insurance so required or the amount actually procured and maintained, whichever shall be the greater: Provided, further, that maintenance of the required insurance shall effect no limitation on LESSEE's liability with respect to any loss or damage resulting from the willful misconduct, lack of good faith, or negligence of LESSEE or any of its officers, agents, servants, employees, subtenants, licensees, and/or invitees.

b) LESSEE shall procure and maintain, at its own expense, insurance on the LEASED PROPERTY in such initial amounts and types as may exceed, but shall not be less than, the minimum amounts and types specified in Clause 6 hereof. However, LESSEE shall provide, maintain, change or discontinue such insurance as the Local Government Representative may from time to time require and direct; Provided, LESSEE's liability for loss of or damage to the LEASED PROPERTY is modified accordingly; Provided, further, that if any insurance requirement is so changed an equitable adjustment shall be made in the amount of the Rent or Maximum Amount to be Expended specified in Clause 3 or 7 hereof so as to reflect any resultant savings or increased cost to LESSEE.

c) All insurance, which this LEASE requires LESSEE to carry on the LEASED PROPERTY, shall be in such form, for such amounts, for such periods of time and with such insurers as the GOVERNMENT may from time to time require or approve. Each policy of insurance shall contain a provision for thirty (30) days written notice to the Real Estate Contracting Officer prior to the making of any material change in or the cancellation of the policy. LESSEE shall deliver promptly to the Real Estate Contracting Officer a certificate of insurance or a certified copy of each policy of insurance required by this LEASE, and LESSEE shall also deliver to the Real Estate Contracting Officer, no later than thirty (30) days prior to the expiration of any such policy, a certificate of insurance or a certified copy of each renewal policy covering the same risks. All insurance required or carried by LESSEE on any of the LEASED PROPERTY shall be for the protection of the GOVERNMENT and LESSEE against their respective risks and liabilities in connection with the LEASED PROPERTY. Each policy of insurance shall name both LESSEE and the United States of America (Department of the Navy) as the insured, and each policy of insurance against loss of or damage to the LEASED PROPERTY shall contain a loss payable clause reading as follows:

i. "Loss, if any, under this policy shall be adjusted with (name of LESSEE) and the proceeds, at the election of the GOVERNMENT, shall be payable to (name of LESSEE); any proceeds not paid to (name of LESSEE) shall be payable to the Treasurer of the United States."

d) In the event that any item or part of the LEASED PROPERTY shall require repair, rebuilding or replacement resulting from loss or damage, the risk of which is assumed by LESSEE under paragraph (a) of this Clause, LESSEE shall promptly give notice thereof to the Real Estate Contracting Officer and, to the extent of its liability as provided in paragraph (a) thereof, shall, upon demand, either compensate the GOVERNMENT for such loss or damage, or rebuild, replace or repair the item or items of the LEASED

PROPERTY so lost or damaged, as the GOVERNMENT may elect. In the event that the GOVERNMENT shall direct LESSEE to effect any repair, rebuilding or replacement which the LESSEE is required to effect pursuant to this paragraph, the GOVERNMENT shall direct the payment to LESSEE of so much of the proceeds of any insurance carried by LESSEE and made available to the GOVERNMENT on account of loss of or damage to any item or part of the LEASED PROPERTY as may be necessary to enable LESSEE to effect such repair, rebuilding or replacement. In the e vent the GOVERNMENT shall elect not to require LESSEE to repair, rebuild or replace any item or part of the LEASED PROPERTY lost or damaged, LESSEE shall promptly pay to the GOVERNMENT out of any insurance proceeds collected by LESSEE such portion thereof as may be allocable to loss of or damage to the LEASED PROPERTY. When compliance with a GOVERNMENT request to effect any repair, rebuilding or replacement of any lost or damaged item or part of the LEASED PROPERTY would involve the incurring of costs in excess of LESSEE's liability for such loss or damage under this Clause, LESSEE shall be under no obligation to effect same until after a satisfactory agreement has been reached between the GOVERNMENT and LESSEE with regard to GOVERNMENT reimbursement of such excess of costs to LESSEE.

10) **REPRESENTATIONS**: LESSEE has examined, knows and accepts the condition and state of repair of the LEASED PROPERTY and the STATION of which it forms a part, and acknowledges that the GOVERNMENT has made no representation concerning such condition and state of repair, nor has the GOVERNMENT made any agreement or promise to alter, improve, adapt, repair or keep in repair the same, or any item thereof or thereupon, which has not been fully set forth in this LEASE, which contains all the agreements made and entered into between the LESSEE and the GOVERNMENT.

11) **SUBJECTION TO EXISTING AND FUTURE EASEMENTS AND RIGHTS OF WAY**: This LEASE is subject to all outstanding easements and rights of way over, across, in and upon the LEASED PROPERTY, or any portion thereof, and to the right of the GOVERNMENT to grant such additional easements and/or rights of way over, across, in and upon the LEASED PROPERTY as the GOVERNMENT shall determine to be in the public interest; Provided, that any such additional easement or right of way shall be conditioned on the assumption by the Grantee thereof of liability to LESSEE for such damages as LESSEE shall suffer for property destroyed or property rendered unusable on account of Grantee's exercise of its rights thereunder. There is hereby reserved to the holders of such easements and rights of way as are presently outstanding or which may hereafter be granted, to any workers officially engaged in the construction, installation, maintenance, operation, repair, or replacement of facilities located thereon, and to any Federal, State or local official engaged in the official inspection thereof such reasonable rights of ingress and egress over the LEASED PROPERTY as shall be necessary for the performance of their duties with regard to such facilities.

12) **TERMINATION BY GOVERNMENT**:

a) The GOVERNMENT shall have the right to terminate this LEASE, at any time, without prior notice, and regardless of any lack of breach by LESSEE of any of the terms and conditions of this LEASE. In the event of termination for any reason not involving a breach by LESSEE of the terms and conditions of the LEASE the GOVERNMENT shall make an equitable adjustment of any advance rentals paid by the LESSEE hereunder. If the GOVERNMENT's use of the Leased Property does not require immediate possession thereof, LESSEE shall be permitted, within such time as the Real Estate Contracting

Officer shall prescribe to harvest, gather and remove from the Leased Property such crops as can be so harvested and removed, but if the GOVERNMENT'S requirements necessitate immediate repossession of the Leased Property, so as to preclude LESSEE from such harvesting and removal of any growing or matured corps. LESSEE hereby specifically releases, remises, and forever discharges the GOVERNMENT from any and all liability or claims of loss or damage of any nature arising out of such termination and repossession, including, but not limited to destruction of, diminution in value of, or inability to harvest any growing crops.

b) In the event that the GOVERNMENT shall elect to terminate this LEASE on account of the breach by LESSEE of any of the terms and/or conditions of this LEASE, no adjustment in advance rentals paid by LESSEE shall be made, and the GOVERNMENT shall be entitled to recover and LESSEE shall pay to the GOVERNMENT:

i. The costs incurred in resuming possession of the LEASED PROPERTY.

ii. The costs incurred in performing any obligation on the part of LESSEE to be performed hereunder.

iii. An amount equal to the aggregate of all rents, Long Term Maintenance Obligation and charges assumed hereunder and not theretofore paid or satisfied, less the net rentals, if any, collected by the GOVERNMENT on the reletting of the LEASED PROPERTY, which amounts shall be due and payable at the time when such rents, obligations and charges would have accrued or become due and payable under this LEASE.

13) **TERMINATION BY LESSEE:**

a) LESSEE shall have the right to terminate this LEASE upon ninety (90) days written notice to the Real Estate Contracting Officer in the event of damage to or destruction of all of the improvements on the LEASED PROPERTY or such a substantial portion thereof as to render the LEASED PROPERTY incapable of use for the purposes for which it is leased hereunder; provided:

i. the Real Estate Contracting Officer either has not authorized or directed the repair, rebuilding or replacement of the improvements or has made no provision for payment for such repair, rebuilding or replacement by application of insurance proceeds or otherwise, and

ii. that such damage or destruction was not occasioned by the fault or negligence of LESSEE or any of its officers, agents, servants, employees, subtenants, licensees and/or invitees, or by any failure or refusal on the part of LESSEE to fully perform its obligations under this LEASE.

b) The LESSEE has the right to terminate this LEASE at the end of the first year, or at the end of any succeeding year, by providing the GOVERNMENT at least 180 days advance written notice.

14) **SURRENDER:** Upon the expiration of this LEASE or its prior termination, LESSEE shall quietly and peacefully remove itself and all of its property from the LEASED PROPERTY and surrender the possession thereof to the GOVERNMENT; Provided, in the event the

GOVERNMENT shall terminate this LEASE upon less than thirty (30) days notice, LESSEE shall be allowed a reasonable period of time, as determined by the Real Estate Contracting Officer, but in no event to exceed thirty (30) days from receipt of notice of termination, in which to remove all of its property from and terminate its operations on the LEASED PROPERTY. During such period prior to surrender, all obligations assumed by LESSEE under this LEASE shall remain in full force and effect; Provided, however, that if the Real Estate Contracting Officer shall, in his/her sole discretion, determine that such action is equitable under the circumstances, he/she may suspend, in whole or in part, any further accruals of Rent or Maximum Amount to be Expended between the date of termination of the LEASE and the date of final surrender of the LEASED PROPERTY.

15) **RESTORATION OF LEASED PROPERTY:** Before the expiration of the LEASE, or prior to surrender of the LEASED PROPERTY if the LEASE has been terminated prior to LEASE expiration (subject to the language below), LESSEE shall restore the LEASED PROPERTY and each item thereof or thereupon to the condition in which it was first received and used by LESSEE, or to such improved condition as may have resulted from any improvement made therein by the GOVERNMENT or by LESSEE, subject however, to ordinary wear and tear and loss or damage for which LESSEE is not expressly liable hereunder; Provided, in the event the GOVERNMENT shall terminate this LEASE upon less than thirty (30) days notice LESSEE shall have thirty (30) days from receipt of notice of termination to accomplish such restoration.

16) **INSTALLATIONS, ALTERATIONS AND REMOVALS:**

a) It is expressly agreed and understood that LESSEE will make no substantial alterations, additions or betterments to or installations upon the LEASED PROPERTY without the prior WRITTEN APPROVAL of the Real Estate Contracting Officer, and then only subject to the terms and conditions of such approval which may include an obligation of removal and restoration upon the expiration or termination of this LEASE. Except insofar as said terms and conditions may expressly provide otherwise, all such alterations, additions, betterments and installations made by LESSEE shall become the property of the GOVERNMENT when annexed or affixed to the LEASED PROPERTY or any part thereof.

b) All improvements constructed or installed by the LESSEE on the LEASED PROPERTY, with the limited exception of pumps, holding tanks, motors, portable offices, and other portable equipment, whether constructed or installed at LESSEE's expense or on a reimbursable basis, become the property of the GOVERNMENT upon expiration or earlier termination of the Lease, without any payment being made by the GOVERNMENT, unless prior written approval, in accordance with paragraph (a) of this clause, allows for the removal of such improvements. With regard to pumps, holding tanks motors, portable offices, and other portable equipment, such items must be removed from the LEASED PROPERTY prior to the expiration or termination of this LEASE or any extension thereof. Provided, that in the event of termination by the GOVERNMENT upon less than thirty (30) days notice, LESSEE may remove such pumps, holding tanks motors, portable offices, and other portable equipment LESSEE has placed upon the LEASED PROPERTY within thirty (30) days from the receipt of notice of termination. All property not so removed shall be deemed abandoned by LESSEE and may be used or disposed of by the GOVERNMENT in any manner whatsoever without any liability to LESSEE, but such abandonment shall in no way reduce any obligation of LESSEE to the GOVERNMENT pursuant to Clause 15 hereof.

17) **INDEMNIFICATION BY LESSEE GOVERNMENT NON-LIABILITY:** LESSEE covenants that it will indemnify and save and hold harmless the GOVERNMENT, its officers, agents, assignees, licensees and employees for and from and all liability or claims for loss of or damage to any property owned by or in the custody of LESSEE, its officers, agents, servants, employees, subtenants, licensees, or invitees, or for the death of or injury to any of the same which may arise out of or be attributable to the condition, state of repair or LESSEE's use and occupancy of the LEASED PROPERTY, or the furnishing of any utilities or services, or any interruption therein or failure thereof, whether or not the same shall be occasioned by the negligence or lack of diligence of LESSEE, its officers, agents, servants or employees.

18) **UTILITIES AND SERVICES:**
(a) In the event that the GOVERNMENT shall furnish LESSEE with any utilities and/or services maintained by the GOVERNMENT which LESSEE may require in connection with its use of the LEASED PROPERTY, LESSEE shall pay the GOVERNMENT the charges therefore in addition to the cash rent (and any other charges/payments) required under this LEASE. Notwithstanding the requirements set forth in Clauses 3 (b) and (c), such charges for utilities and services, and the method of payment thereof shall be determined by the appropriate supplier of such service, in accordance with applicable laws and regulations, on such basis as the appropriate supplier of such service may establish which may include a requirement for the installation of adequate connecting and metering equipment at the sole cost and expense of LESSEE. It is expressly agreed and understood that the GOVERNMENT in no way warrants the continued maintenance or adequacy of any utilities and/or services furnished to the LESSEE. It is also expressly agreed and understood that the GOVERNMENT does not hereby guarantee that it will provide any specific utilities and/or services to the LESSEE.

19) **LIENS:** LESSEE shall promptly discharge or cause to be discharged any valid lien, right in rem, claim or demand of any kind, except one in favor of the GOVERNMENT, which at any time may arise or exist with respect to the LEASED PROPERTY or materials or equipment furnished therefore, or any part thereof, and if the same shall not be promptly discharged by LESSEE, the GOVERNMENT may discharge, or cause to be discharged, the same at the expense of LESSEE.

20) **ACCESS:** The GOVERNMENT shall have access to the LEASED PROPERTY at all reasonable times for any purposes not inconsistent with the quiet use and enjoyment thereof by LESSEE, including, but not limited to, the purpose of inspection.

21) **STATE AND LOCAL TAXES:** In the event that as a result of any future Act of Congress, subjecting GOVERNMENT-owned property to taxation, any taxes, assessments or similar charges are imposed by State or local authorities upon the LEASED PROPERTY (other than upon LESSEE's possessory interest therein), LESSEE shall pay the same when due and payable and this LEASE shall be renegotiated so as to accomplish an equitable reduction in the amount of the Rent of Maximum Amount to be Expended specified in Clause 3 hereof, which reduction shall in no event exceed the amount of such taxes, assessments, or similar charges; Provided, in event the parties hereto are unable to agree within ninety (90) days from the date of the imposition of such taxes, assessments, or similar charges, upon a rental which in the opinion of the Real Estate Contracting Officer constitutes a reasonable return to the GOVERNMENT on the LEASED PROPERTY, the Real Estate Contracting Officer shall have the right to determine the amount of the rental, which determination shall be unilaterally binding on LESSEE, subject to the LESSEE's appeal of such determination, which shall be treated as a dispute in accordance with the provisions of Clause 22 hereof.

22) **DISPUTES CLAUSE (July 2002):**

a) This LEASE is subject to the Contract Disputes Act of 1978, as amended (41 U.S.C. § 7101-7109)

b) Except as provided in the Act, all disputes arising under or relating to this LEASE shall be resolved under this clause.

c) "Claim," as used in this clause, means a written demand or written assertion by the LESSEE or the GOVERNMENT seeking, as a matter of right, the payment of money in a sum certain, the adjustment or interpretation of LEASE terms, or other relief arising under or relating to this LEASE. However, a written demand or written assertion by the LESSEE seeking the payment of money exceeding $100,000 is not a claim under the Act until certified. A voucher, invoice, or other routine request for payment that is not in dispute when submitted is not a claim under the Act. The submission may be converted to a claim under the Act, by complying with the submission and certification requirements of this clause, if it is disputed either as to liability or amount or is not acted upon in a reasonable time.

d)

i) A claim by the LESSEE shall be made in writing and, unless otherwise stated in his LEASE, submitted within 6 years after accrual of the claim to the Real Estate Contracting Officer, Naval Facilities Engineering Command, Southwest for a written decision. A claim by the GOVERNMENT against the LESSEE shall be subject to a written decision by the Real Estate Contracting Officer, Naval Facilities Engineering Command, Southwest.

ii)

(a) The LESSEE shall provide the certification specified in Clause 22 (d)(ii)(c) of this clause when submitting any claim exceeding $100,000.

(b) The certification requirement does not apply to issues in controversy that have not been submitted as all or part of a claim.

(c) The certification shall state as follows:

"I certify that the claim is made in good faith; that the supporting data is accurate and complete to the best of LESSEE's knowledge and belief; that the amount requested accurately reflects the LEASE adjustment for which the LESSEE believes the GOVERNMENT is liable; and that I am duly authorized to certify the claim on behalf of the LESSEE."

iii) The certification may be executed by any person duly authorized to bind the LESSEE with respect to the claim.

e) For LESSEE claims of $100,000 or less, the Real Estate Contracting Officer, Naval Facilities Engineering Command, Southwest must, if requested in writing by the LESSEE, render a decision within 60 days of the request. For LESSEE-certified claims over $100,000, the Real Estate Contracting Officer, Naval Facilities Engineering Command, Southwest must, within 60 days, decide the claim or notify the LESSEE of

the date by which the decision will be made.

f) The Real Estate Contracting Officer, Naval Facilities Engineering Command, Southwest decision shall be final unless the LESSEE appeals or files a suit as provided in the Act.

g) If the claim by the LESSEE is submitted to the Real Estate Contracting Officer, Naval Facilities Engineering Command, Southwest or a claim by the GOVERNMENT is presented to the LESSEE, the parties, by mutual consent, may agree to use alternative dispute resolution (ADR). If the LESSEE refuses an offer for ADR, the LESSEE shall inform the Real Estate Contracting Officer, Naval Facilities Engineering Command, Southwest, in writing, of the LESSEE's specific reasons for rejecting the offer.

h) The GOVERNMENT shall pay interest on the amount found due and unpaid from

(i) the date that the Real Estate Contracting Officer, Naval Facilities Engineering Command, Southwest receives the claim (certified, if required); or

(ii) the date that payment otherwise would be due, if that date is later, until the date of payment. With regard to claims having defective certifications, as defined in FAR 33.201, interest shall be paid from the date that the Real Estate Contracting Officer, Naval Facilities Engineering Command, Southwest initially receives the claim. Simple interest on claims shall be paid at the rate, fixed by the Secretary of the Treasury as provided in the Act, which is applicable to the period during which the Real Estate Contracting Officer, Naval Facilities Engineering Command, Southwest receives the claim and then at the rate applicable for each 6-month period as fixed by the Treasury Secretary during the pendency of the claim.

I) The LESSEE shall proceed diligently with performance of this LEASE, pending final resolution of any request for relief, claim, appeal, or action arising under the LEASE, and comply with any decision of the Real Estate Contracting Officer, Naval Facilities Engineering Command, Southwest.

23) **COVENANT AGAINST CONTINGENT FEES:** LESSEE warrants that no person or agency has been employed or retained to solicit or secure this LEASE upon an agreement or understanding for a commission, percentage, brokerage or contingent fee, excepting bona fide employees or bona fide established commercial agencies maintained by LESSEE for the purpose of securing business. For breach or violation of this warranty, the GOVERNMENT shall have the right to annul this LEASE without liability or in its discretion to require LESSEE to pay, in addition to the rental or consideration, the full amount of such commission, percentage, brokerage, or contingent fee.

24) **OFFICIALS NOT TO BENEFIT:** No Member of or Delegate to Congress, or Resident Commissioner, shall be admitted to any share or part of this LEASE, or to any benefit to arise therefore, but this provision shall not be construed to extend to this LEASE if made with a corporation for its general benefit.

25) **FAILURE OF GOVERNMENT TO INSIST ON COMPLIANCE:** The failure of the GOVERNMENT to insist, in any one or more instances, upon performance of any of the terms, covenants or conditions of this LEASE shall not be construed as a waiver or relinquishment of the GOVERNMENT's right to the future performance of any such terms,

covenants or conditions and LESSEE's obligations in respect to such future performance shall continue in full force and effect.

26) **ASSIGNMENT OR SUBLETTING:**

a) The LESSEE shall not assign this LEASE or any interest therein or any property on the LEASED PROPERTY, nor sublet the LEASED PROPERTY or any part thereof, or any property thereon, nor grant any interest, privilege, or license whatsoever in connection with this LEASE without the prior written consent of the GOVERNMENT.

b) The LESSEE shall submit requests for a sublease in writing within 180 days prior to the anniversary date of the LEASE. Only requests for subleases of the entire parcel will be considered. Requests for a sublease within the first year of the LEASE shall not be allowed. Requests for a sublease shall include an adequate reason and justification for the requested sublease and shall include payment of a Real Estate Processing Fee in the amount of $1,500.00. Requests for a sublease shall include a copy of the proposed sublease agreement, and the proposed sublease agreement must provide that all the terms of the original LEASE expressly apply to the sublease agreement. If the request for a sublease is denied, the Real Estate Processing Fee will be returned, without interest, as soon as practicable.

c) The LESSEE is not permitted under any circumstances to make any assignment of this LEASE, or of any interest therein, or make any assignment of any property on the LEASED PROPERTY.

27) **LABOR PROVISION - EQUAL OPPORTUNITY**

a) During the term of this LEASE the LESSEE agrees as follows:

i. The LESSEE will not discriminate against any employee or applicant for employment because of race, color, religion, sex, or national origin. The LESSEE will take affirmative action to ensure that applicants are employed, and that employees are treated during employment, without regard to their race, color, religion, sex, or national origin. Such action shall include, but not be limited to the following: Employment, upgrading, demotion, or transfer, recruitment or recruitment advertising; layoff or termination; rates of pay or other forms of compensation; selection for training, including apprenticeship. The LESSEE agrees to post in conspicuous places, available to employees and applicants for employment, notices to be provided by the GOVERNMENT setting forth the provisions of this nondiscrimination clause.

ii. The LESSEE will, in all solicitations or advertisements for employees placed by or on behalf of the LESSEE, state that all qualified applicants will receive consideration for employment without regard to race, color, religion, sex or national origin.

iii. The LESSEE will send to each labor union or representative of workers with which he has a collective bargaining agreement or other contract or understanding a notice to be provided by the GOVERNMENT, advising the labor union or worker's representative of the LESSEE's commitments under this Equal Opportunity clause and shall post copies of the notice in conspicuous places available to employees and applicants for employment.

iv. The LESSEE will comply with all provisions of Executive Order 11246 of September 24, 1965, as amended by Executive Order 11375 of October 13, 1967, and with the rules, regulations, and orders of the Secretary of Labor.

v. The LESSEE will furnish all information and reports required by Executive Order 11246 of September 24, 1965, as amended by Executive Order 11375 of October 13, 1967, and by the rules, regulations, and orders of the Secretary of Labor or pursuant thereto, and will permit access to his books, records, and accounts by the GOVERNMENT (including but not limited to the Secretary of Labor), for purposes of investigating to ascertain compliance with such rules, regulations, and orders.

vi. In the event of the LESSEE's noncompliance with the Equal Opportunity clause of this LEASE or with any of the above-referenced rules, regulations, or orders, this LEASE may be canceled, terminated or suspended in whole or in part and the LESSEE may be declared ineligible for further GOVERNMENT contracts in accordance with procedures authorized in Executive Order 11246 of September 24, 1965, as amended by Executive Order 11375 of October 13, 1967, and such other sanctions may be imposed and remedies invoked as provided in Executive Order 11246 of September 24, 1965, as amended by Executive Order 11375 of October 13, 1967, or by rule, regulation, or order of the Secretary of Labor, or as otherwise provided by law.

vii. The LESSEE will include the provisions of Clauses 27 (a) (i) through 27 (a) (vii) in every subcontract or purchase order unless exempted by rules, regulations, or orders of the Secretary of Labor issued pursuant to section 204 of Executive Order 11246 of September 24, 1965, as amended by Executive Order 11375 of October 13, 1967, so that such provisions will be binding upon each SUBLESSEE or vendor. The LESSEE will take such action with respect to any SUBLESSEE or purchase order as the GOVERNMENT may direct as a means of enforcing such provisions including sanctions for noncompliance: Provided, however, that in the event the LESSEE becomes involved in, or is threatened with, litigation with SUBLESSEE or vendor as a result of such direction by the GOVERNMENT, the LESSEE may request the United States to enter into such litigation to protect the interests of the United States. However, the GOVERNMENT makes no guarantee as to whether the GOVERNMENT will enter into or participate in any such litigation.

b) Convict Labor. In connection with the performance of work required by this LEASE, LESSEE agrees not to employ any person undergoing a sentence of imprisonment at hard labor.

c) Contract Work Hours and Safety Standards Act (40 U.S.C. §§ 3701, et. seq.). This LEASE, to the extent that it is a contract of a character specified in the Contract Work Hours and Safety Standards Act and is not covered by the Walsh-Healey Public Contracts Act (41 U.S.C. §§ 6501, et. seq.), is subject to the following provisions and exceptions of said Contract Work Hours Standards Safety Act and to all other provisions and exceptions of said law:

i. The LESSEE shall not require or permit any laborer or mechanic in any workweek in which he is employed on any work under this contract to work in excess of 8 hours in any calendar day or in excess of 40 hours in such workweek on work subject to the provisions of the Contract Work Hours Standards Act unless such laborer or mechanic receives compensation at a rate not less than one and one-

half times his basic rate of pay for all such hours worked in excess of 8 hours in any calendar day or in excess of 40 hours in such workweek, whichever is the greater number of overtime hours. The "basic rate of pay," as used in this clause, shall be the amount paid per hour, exclusive of the LESSEE's contribution or cost for fringe benefits and any cash payment made in lieu of providing fringe benefits, or the basic hourly rate contained in the wage determination, whichever is greater.

ii. In the event of any violation of the provisions of paragraph (i) above, the LESSEE shall be liable to any affected employee for any amounts due, and to the United States for liquidated damages. Such liquidated damages shall be computed with respect to each individual laborer or mechanic employed in violation of the provisions of paragraph (i) above in the sum of $10 for each calendar day on which such employee was required or permitted to be employed on such work in excess of 8 hours or in excess of the standard workweek of 40 hours without payment of the overtime wages required by paragraph (i) above.

28) **GOVERNMENT RULES AND REGULATIONS:** LESSEE shall comply with such rules and regulations regarding STATION security, ingress, egress, safety and sanitation as may be prescribed, from time to time, by the Real Estate Contracting Officer or by the Commanding Officer of the STATION. Such rules and regulations are subject to change at any time.

29) **NOTICES:**

Notices shall be sufficient under this LEASE if made in writing and submitted in the case of LESSEE to:

[Lessee's name, street address, fax number]

and in the case of the GOVERNMENT to:

Naval Facilities Engineering Command Southwest
Attn: Desert IPT, Asset Management
1220 Pacific Highway, Bldg 130
San Diego, CA 92132-5190
FAX: 619-532-1242

Such notice shall be deemed to have been given unless delivered personally, five (5) days after deposited in the U.S. mail, postage pre-paid, certified mail, return receipt requested and addressed as set forth above or to such other address as either party shall have provided to the other by like notice; or upon confirmation of receipt if sent by facsimile on a regular business day and addressed as set forth above; or within twenty-four (24) hours, or the next business day if sent by an overnight delivery service such as FedEx.

30) **INTEREST:** Notwithstanding any other provision of this LEASE, unless paid within thirty (30) days, all amounts that become payable by the LESSEE to the GOVERNMENT under this LEASE (net of any applicable tax credit under the Internal Revenue Code) shall bear interest from the date until paid and shall be subject to adjustments as provided by Part 6 of Appendix E of the Armed Services Procurement Regulation, as in effect on the date of this LEASE. The interest rate per annum shall be the interest rate in effect which has been established by the Secretary of the Treasury pursuant to Public Law 92-41; 85 STAT 97 for the Renegotiation

Board, as of the date the amount becomes due as herein provided. Amounts shall be due upon the earliest one of (i) the date fixed pursuant to this LEASE; (ii) the date of the first written demand for payment, consistent with this LEASE, including demand consequent upon default termination; (iii) the date of transmittal by the GOVERNMENT to the LESSEE of a proposed supplemental agreement to confirm completed negotiations fixing the amount; or (iv) if this LEASE provides for revision of prices, the date of written notice to the LESSEE stating the amount of refund payable in connection with a pricing proposal or in connection with a negotiated pricing agreement not confirmed by LEASE amendment.

31) **ADMINISTRATION:** The Real Estate Contracting Officer specified in Clause 37 (b) of this LEASE shall, under the direction of the Commanding Officer, Naval Facilities Engineering Command Southwest, have complete charge of the administration of this LEASE, and shall exercise full supervision and general direction thereof insofar as the interests of the GOVERNMENT are affected.

32) **ENVIRONMENTAL PROVISIONS:** The following definitions shall apply to this LEASE:

a) "Hazardous Material" means any substance:

i. The presence of which requires investigation or remediation under any applicable federal, state or local statute, regulation, ordinance, order, action, policy or common law; or

ii. Which is or becomes defined as a "hazardous waste," or hazardous substance," pollutant or contaminant pursuant to any federal, state or local statute, regulation, rule or ordinance now or hereafter in effect, including but limited to the Comprehensive Environmental Response, Compensation and Liability Act (CERCLA) (42 U.S.C. §§ 9601, et seq.) and/or the Resource Conservation and Recovery Act (RCRA) (42 U.S.C. §§ 6901, et seq.); and/or California Health & Safety Code §§ 25100, et seq.

iii. Which is toxic, reactive, explosive, corrosive, ignitable, flammable, infectious, radioactive, carcinogenic, or otherwise hazardous and is or becomes regulated by any governmental authority, agency, department, commission, board, agency or instrumentality of the United States, the State of California or any political subdivision thereof; or

iv. Which contains gasoline, diesel fuel or any other petroleum hydrocarbons, polychlorinated biphenyles (PCBs), asbestos, or urea formaldehyde foam insulation.

b) "Environmental Requirements" mean all applicable present and future statutes, regulations, rules, ordinances, codes, licenses, permits, orders, approvals, plans or authorizations and similar items of all governmental agencies, departments, commissions, boards, bureaus, or instrumentalities of the United States, states and political subdivisions thereof and all applicable judicial, administrative and regulatory decrees, judgments and orders relating to the protection of human health or the environment and occupational safety and public health and safety, including but not limited to those pertaining to reporting, licensing, permitting, investigation and remediation of emissions, discharges, release or threatened releases of Hazardous Materials, chemical substances, pollutants, contaminants or hazardous or toxic substances, materials or wastes.

c) "Environmental Damages" mean all claims, judgments, damages, fines, liabilities, encumbrances, liens, costs and expenses of investigation and defense of any claim, whether or not such claim is defeated, and of any good faith settlement or judgment, of whatever kind or nature, contingent or otherwise, matured or unmatured, foreseeable or unforeseeable, including without limitation reasonable attorneys' fees and consultants' fees, any of which are incurred at any time as a result of (i) the release or threat of release of any hazardous substance, hazardous constituent, hazardous waste, pollutant, or contaminant into the environment; (ii) the existence of Hazardous Materials (A) upon or beneath the Leased Property or (B) migrating or threatening to migrate from the Leased Property, or (iii) a violation of Environmental Requirements pertaining to the LEASE, and including damages to a person or injury to property or natural resources, occurring upon or off of the Leased Property, and all other costs incurred in connection with the investigation or remediation of such Hazardous Materials or violation of Environmental Requirements, including but not limited to the performance of any cleanup, remediation, removal, corrective action, response, abatement or monitoring work required by any federal, state or local government agency.

d) Covenants and Requirements:

i. LESSEE and its officers, employees, agents, and contractors shall be solely responsible for obtaining, at no cost to the GOVERNMENT, any and all environmental permits or approvals required for LESSEE's actions with respect to the LEASE, independent of any existing federal, state, and/or local permits held by the Department of the Navy.

ii. LESSEE and its officers, employees, agents, and contractors shall comply with all Environmental Requirements. LESSEE shall be solely responsible for any and all Environmental Damages, including but not limited to fines; penalties; environmental fees or taxes and any interest thereon; enforcement actions instituted in connection with LESSEE's use, or otherwise imputed to LESSEE by law through others' use or occupancy, of the Leased Property; all costs of corrective action or response to include removal or remedial action incurred by the United States not inconsistent with the National Contingency Plan (NCP); any other necessary costs of response incurred by any other person consistent with the NCP; damages for injury to, destruction of, or loss of natural resources, including the reasonable costs of assessing such injury, destruction or loss; and the costs of any health assessment or health effects study carried out under 42 U.S.C. §§ 9604.

iii. Use, Storage, Treatment and Disposal of Hazardous Materials on Leased Property.

(a) The Lessee shall strictly comply with the Environmental Requirements, including but not limited to all applicable Federal, State, and local laws and regulations governing release reporting, use, storage, management, and disposal of Hazardous Materials on the Leased Property. Except as specifically authorized by the Government in writing, Lessee must provide at its own expense of such Hazardous Materials management complying with all Environmental Requirements. Government hazardous waste management facilities will not be available to Lessee. Nor shall Lessee permit its Hazardous Materials to be commingled with waste of the Department of the Navy. Any violations of the requirements of this condition shall be deemed a material breach of this Lease.

(b) 10 U.S.C. § 2692 prohibits storage, treatment, or disposal of any material that is toxic or hazardous which is not owned either by the Department of Defense or by a member of the armed forces, on a Department of Defense installation unless the Secretary of the Navy grants a waiver for such activity. Lessee covenants that it shall not store, produce, manufacture, generate, refine, treat, discharge, release, or dispose of upon, about, or beneath the Leased Property any Hazardous Material except as specifically approved by the Secretary of Navy in accordance with 10 U.S.C. § 2692. This prohibition does not apply to the proper use, temporary accumulation, and associated incidental storage of limited quantities of pesticides, insecticides, herbicides, fungicides, rodenticides, algaecides, and fertilizers, or limited quantities of waste generated there from, pursuant to activities authorized under Paragraph 6 of the attached Exhibit "B." Prior to the use of any such chemicals on the Leased Property, Lessee shall comply with the approval requirements of Section 6(A)(5) of the Soil and Water Conservation Plan.

(c) In the event Lessee desires to engage in an activity prohibited by 10 U.S.C. § 2692 on the Leased Property, Lessee shall notify the Government prior to engaging in such activity, and shall cooperate with the Government in the Government's efforts to obtain the waiver required by 10 U.S.C. § 2692. In addition, prior to implementing any changes in activities conducted under such waiver, Lessee shall notify the Government of any such planned changes and shall cooperate with the Government in obtaining any additional waiver necessitated by the change.

iv. Except as set forth in Clause 32 (a) (ii), LESSEE covenants that it shall not cause any Hazardous Material to be brought upon, treated, kept, stored, disposed of, discharged, released, produced, manufactured, generated, refined or used upon, about or beneath the LEASE except as specifically approved by the Secretary of the Navy in accordance with 10 U.S.C. §2692. If such approval is obtained, LESSEE shall strictly comply with the Environmental Requirements, including applicable Federal, State, and local laws and regulations governing use, storage, and release reporting of Hazardous Materials on the LEASE and the management/disposal of Hazardous Materials. Except as specifically authorized by the GOVERNMENT in writing, LESSEE must provide at its own expense for such Hazardous Materials management complying with all Environmental Requirements. Government hazardous waste management facilities will not be available to LESSEE. Nor shall LESSEE permit its Hazardous Materials to be commingled with waste of the Department of the Navy. Any violation of the requirements of this condition shall be deemed a material breach of this LEASE.

v. If any Hazardous Material is brought upon, treated, kept, stored, disposed of, discharged, released, produced, manufactured, generated, refined or used upon, about or beneath the Leased Property or any portion thereof in violation of any Clause in the Lease or is in existence in, on or under the Leased Property, Lessee shall, at the direction of the Government or any federal, state or local authority, remove or remediate such Hazardous Material and/or otherwise comply with the Environmental Requirements of such authority.

vi. Lessee releases, remits, and forever discharges the Government, its officers, agents, and employees of and from any and all claims, causes of action, injuries, damages,

and demands whatsoever in law or in equity arising out of, or connected with, Lessee's use of otherwise imputed to Lessee by law through others' use or occupancy of the Leased Property. Lessee agrees to indemnify, defend, and hold harmless the United States against all fines, claims, damages, law suits, judgments, and expenses arising out of such use and/or occupancy of the Leased Property and not resulting from the negligence or willful intent or misconduct of Government, its officers, agents, and/or employees.

vii. Any agency of the United States, its officers, agents, employees, and contractors, may enter upon the Leased Property, at all reasonable times for any purposes including, but not limited to, purposes of inspection. The Government normally will give the Lessee twenty-four (24) hours prior notice of its intention to enter the Leased Property, unless it determines sooner entry is required for safety, environmental, operations, or security purposes. The Lessee shall have no claim against the United States or any officer, agent, employee or contractor thereof, on account of any such entries. The Government's right of inspection shall be without prejudice to the right of duly constituted enforcement officials to make inspections. The right of Government access shall also include the right to conduct any environmental response actions the Government deems necessary.

viii. Worker Protection Standard (WPS) for Agricultural Pesticides. The Lessee shall follow all WPS requirements on pesticide labels including: Personal Protective Equipment (PPE), Application Requirements, and Agricultural Use Requirements – Restricted-Entry Interval (REI), Early-Entry PPE and Non-hand Labor Early-Entry. The U.S. Environmental Protection Agency, or the California Environmental Protection Agency of Agriculture and Pest Protection can provide the Lessee with additional WPS information.

ix. Pollution Prevention and Right-To-Know Information (August 2003)

(a) *Definitions*. As used in this clause—"Priority chemical" means a chemical identified by the Interagency Environmental Leadership Workgroup or, alternatively, by an agency, "Toxic chemical" means a chemical or chemical category listed in 40 CFR 372.65.

(b) Pursuant to Executive Order 13423, Federal facilities comply with the provisions of the Emergency Planning and Community Right-to-Know Act of 1986 (EPCRA) (42 U.S.C. §§ 11001-11050) and the Pollution Prevention Act of 1990 (PPA) (42 U.S.C. §§ 13101-13109).

(c) The LESSEE shall provide all information needed by the Federal facility to comply with the following:

(i) The emergency planning reporting requirements of Section 302 of EPCRA.
(ii) The emergency notice requirements of Section 304 of EPCRA.
(iii) The list of Material Safety Data Sheets, required by Section 311 of EPCRA.
(iv) The emergency and hazardous chemical inventory forms of Section 312 of EPCRA.
(v) The toxic chemical release inventory of Section 313 of EPCRA, which includes the reduction and recycling information required by Section 6607 of PPA.

(vi) The toxic chemical, priority chemical, and hazardous substance release and use reduction goals of Sections 502 and 503 of Executive Order 13423.

33) **SAFETY AND HEALTH REQUIREMENTS:**

a) LESSEES, employers, and/or business owners shall develop and implement a written safety and health program (SHP) for their employees involved in any agricultural operations under the GOVERNMENT'S agricultural lease program.

b) The program shall be designed to identify, evaluate and control safety and health hazards and provide ways, means and methods to protect employees from potential injury or illness.

c) Subcontractors shall develop and implement their own SHP and shall comply with the requirements of this guidance. If a subcontractor does not have its own SHP, the LESSEE or business owner shall include the subcontractor in his/her written SHP describing the subcontractor and its operation.

d) A site safety and health officer (SSHO) shall be assigned and designated in writing and shall have the following qualifications:

(i) A minimum of two (2) years experience in agricultural operations.
(ii) A minimum of one (1) year of experience in implementing safety and health programs in an agricultural site.
(iii) 10-hour OSHA safety class or equivalent within the last 5 years.
(iv) Competent person training as needed.

e) The SHP shall be continuously reviewed throughout the life of the LEASE. At a minimum, reviewed yearly and amended as necessary, especially when new hazards, not originally identified in the program, are discovered.

f) A copy of the written SHP shall be on site and be made available to any contractor, subcontractor, to employees, OSHA, and other federal, state and local agency with regulatory authority over the site.

g) Accident/mishap reporting: Any mishap or accident that requires reporting of injuries, illness, and property damage under OSHA shall be reported to the base's Officer of the Day (OOD) and the STATION POC within 24 hours of the incident. The LESSEE, employer, and/or business owner shall conduct an accident/mishap investigation and provide a copy of the report to the OOD and STATION POC within five (5) calendar days of the incident.

34) **SPECIAL PROVISIONS**:

a) In accordance with Clause 28, Government Rules and Regulations hereof, the following additional requirements are prescribed at this time:

i. Possessory Interest Tax: Where applicable, the leasehold interest in GOVERMENT-owned land may be subject to State and local taxation as a possessory interest in tax exempt real property. The amount of assessment to be charged to the LESSEE is determined by the County Assessor. Such taxes are the sole responsibility and liability

of the LESSEE.

ii. LESSEE shall not store on the Leased Property any property that is dangerous to public health or safety, without providing adequate safeguards. No property of this type shall be abandoned or destroyed on the Leased Property. The GOVERNMENT assumes no liability for damage to the Leased Property or for personal injuries sustained as a result of removal or use of the property that is dangerous to public health and safety. Furthermore, the GOVERNMENT shall be held harmless from any and all demands, suits, actions and claims arising from any storage, use or disposal of any property that is dangerous to public health and safety.

iii. Notwithstanding Clause 32 (d) (iii), the LESSEE may store and use fuel and motor oil on parcels which have a dedicated ground water well, provided such fuel and motor oil is used exclusively for the operation of said groundwater well and appurtenances. Such storage containers shall be equipped with a locking valve and secured any time the pump is not in use. No such fuel or motor oil shall be abandoned or otherwise disposed of on the LEASED PROPERTY. The GOVERNMENT assumes no liability for damage to such property or for personal injuries sustained as a result of removal or use of such fuel or motor oil. Furthermore, the LESSEE shall hold the GOVERNMENT harmless from any and all liability or claims for damage to or loss of property, or for injury or death, which may arise out of or be attributable to any such use or disposal, in accordance with Clause 16 herein.

iv. In the event LESSEE stores fuel and/or motor oil, LESSEE shall bring secondary containment into compliance with 40 C.F.R Part 112.

v. LESSEE shall not mix or store pesticides, herbicides or fertilizers on the LEASED PROPERTY. LESSEE shall be allowed temporary staging of approved pesticides, herbicides or fertilizers. Temporary staging is defined as the duration of any application of the approved product. Under no circumstances shall LESSEE be allowed overnight staging. LESSEE shall conduct decontamination of applicators of pesticides, herbicides, and fertilizers off the LEASED PROPERTY.

vi. Cost Sharing Assistance: Cost sharing assistance may be available to the LESSEE under U. S. Department of Agriculture, Conservation Programs. The LESSEE, however, shall not apply for or accept any federal cost sharing payment for any soil and water conservation practice required by the Lease that will result in duplicate payment for such practice. Projects completed as partial or entire consideration for the Lease, or for which reimbursement is made by the Department of the Navy, are not qualified as cost sharing projects under the USDA Conservation Programs. Any LESSEE of the STATION's agricultural or grazing lands who wishes to enter into any U.S. Department of Agriculture Conservation Program contract or agreement shall do so solely at the discretion of and subject to the USDA rules and regulations. The GOVERNMENT, Department of Navy, makes no guarantee to the LESSEE regarding normal crop acreages, allotments for crops, or the status of outleased land as being qualified for USDA programs.

vii. The LESSEE shall be available at all times to correct emergency situations with regard to the LEASE. The LESSEE shall provide the STATION POC with emergency telephone numbers where the LESSEE may be contacted during working and non-working hours. The LESSEE shall also provide at least one alternative point of

contact (name, address, and phone number) that may act on behalf of the LESSEE in emergency situations. The LESSEE or his alternate(s) shall be available for contact seven days per week, 24 hours per day and should arrive on STATION within two hours after being notified in any way of an emergency.

a. LESSEE Alternative Point of Contact authorized to act on behalf of the LESSEE in emergency situations:

Name:
Address:
Home Telephone:
Mobile Telephone:
Email:

viii. Hazardous Waste: All hazardous waste generated on the LEASED PROPERTY must be transported and disposed of offsite in accordance with federal, state, and local law. The LESSEE shall use its own EPA Identification Number and all hazardous waste shipments must be accompanied by a manifest listing the LESSEE's EPA ID Number. LESSEE shall provide copies of the manifests to the Base Environmental Department point of contact.

ix. The LESSEE shall coordinate all activities with the STATION POC or his/her designated representative identified in Clause 34 (a) (ix) (c) below. Government Points of Contact (POC) are identified below:

a. LEASE Issues:

Commanding Officer
Naval Facilities Engineering Command Southwest
Attn: Kimberly Spencer, Realty Specialist, Desert IPT, AM
1220 Pacific Highway, Bldg 130
San Diego, CA 92132-5190

b. Soil and Water Conservation Plan Issues

Integrated Product Team (IPT) Desert
Naval Facilities Engineering Command Southwest
Attn: Carol Dahlstrom, Code: JA20.CD
1220 Pacific Highway
San Diego, California 92132
Telephone: (619) 532-2269
Email carol.dahlstrom@navy.mil

c. Station Point of Contact (STATION POC)

Public Works Department - Environmental Site Office
Designated representative(s) or Integrated Pest Management Coordinator
Naval Air Station Lemoore
750 Enterprise Avenue
Lemoore, California 93246-5051
Telephone: (559) 998-3251 or (559) 998-4070

35) **EXECUTION BY LESSEE**:

LESSEE: _____
(print)

Names of all Corporate officers, directors, and shareholders, partners of partnership, or officers or members of other business entity submitting bid:

_____(names)_____

Tax Identification #: _____

Mailing Address: _____

_____

FedEx Mailing Address: _____

_____

Home Telephone: _____

Mobile Telephone: _____

24 Hour Emergency Telephone: _____

E-mail Address: _____

Fax: _____

_____ _____
Signature of Lessee Date

PRESIDENT_____ _____
Title of Lessee Witness

For Corporation LESSEE, certification by Secretary or Assistant Secretary of the Corporation:

I certify that the person who signed this LEASE on behalf of LESSEE was then the Officer indicated and this agreement was duly signed for and on behalf of said corporation by authority of its governing body and is within the scope of its corporate powers.

(Corporate Seal) _____
Signature

_____ PRESIDENT_____
ITS Title

36) EXECUTION BY THE GOVERNMENT:

THE UNITED STATES OF AMERICA
Department of the Navy
Naval Facilities Engineering Command Southwest
Desert IPT Real Estate (Code OPJB1)
1220 Pacific Highway, Building 130
San Diego, CA 92132

_____ _____
LINDSEY GREEN Date
Real Estate Contracting Officer

37) NAVY IDENTIFICATION DATA:

i) N6247314RP00101, Parcel 4A29

a. **NAME AND ADDRESS OF STATION**:

Naval Air Station Lemoore
Commander Navy Region Southwest
Environmental Site Office, Code N45LCW
Lemoore, California 93245
Phone: (559) 998-4096

b. **REAL ESTATE CONTRACTING OFFICER/TITLE AND ADDRESS**:

Commanding Officer
Desert IPT Real Estate (Code RJV10.LG)
Naval Facilities Engineering Command Southwest
1220 Pacific Highway, Building130
San Diego, CA 92132

NAS LEMOORE AGRICULTURAL OUTLEASE MAP

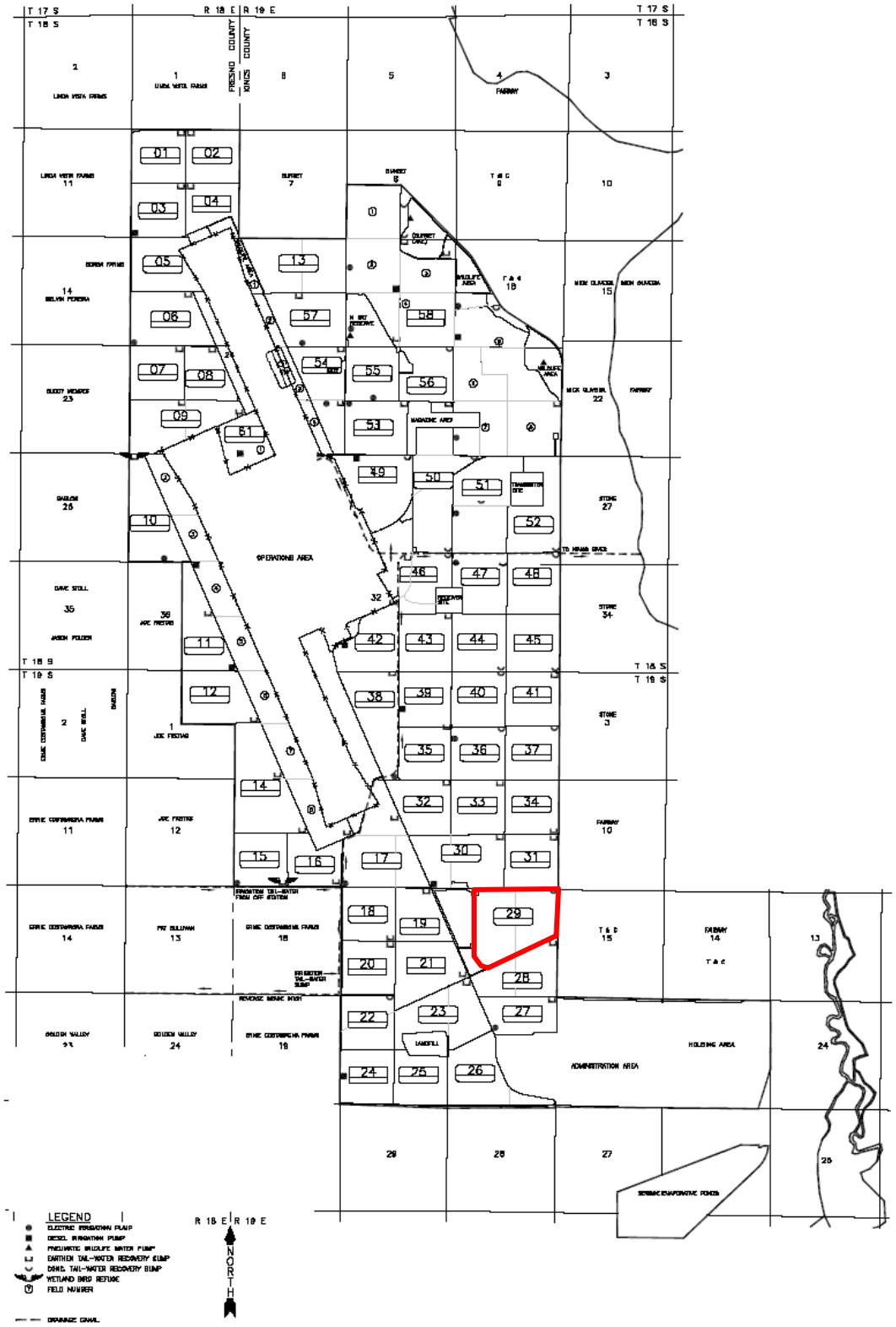

Appendix A:
Soil and Water Conservation Plan for Agricultural Outlease
Page 1 of 2

Exhibit "A"

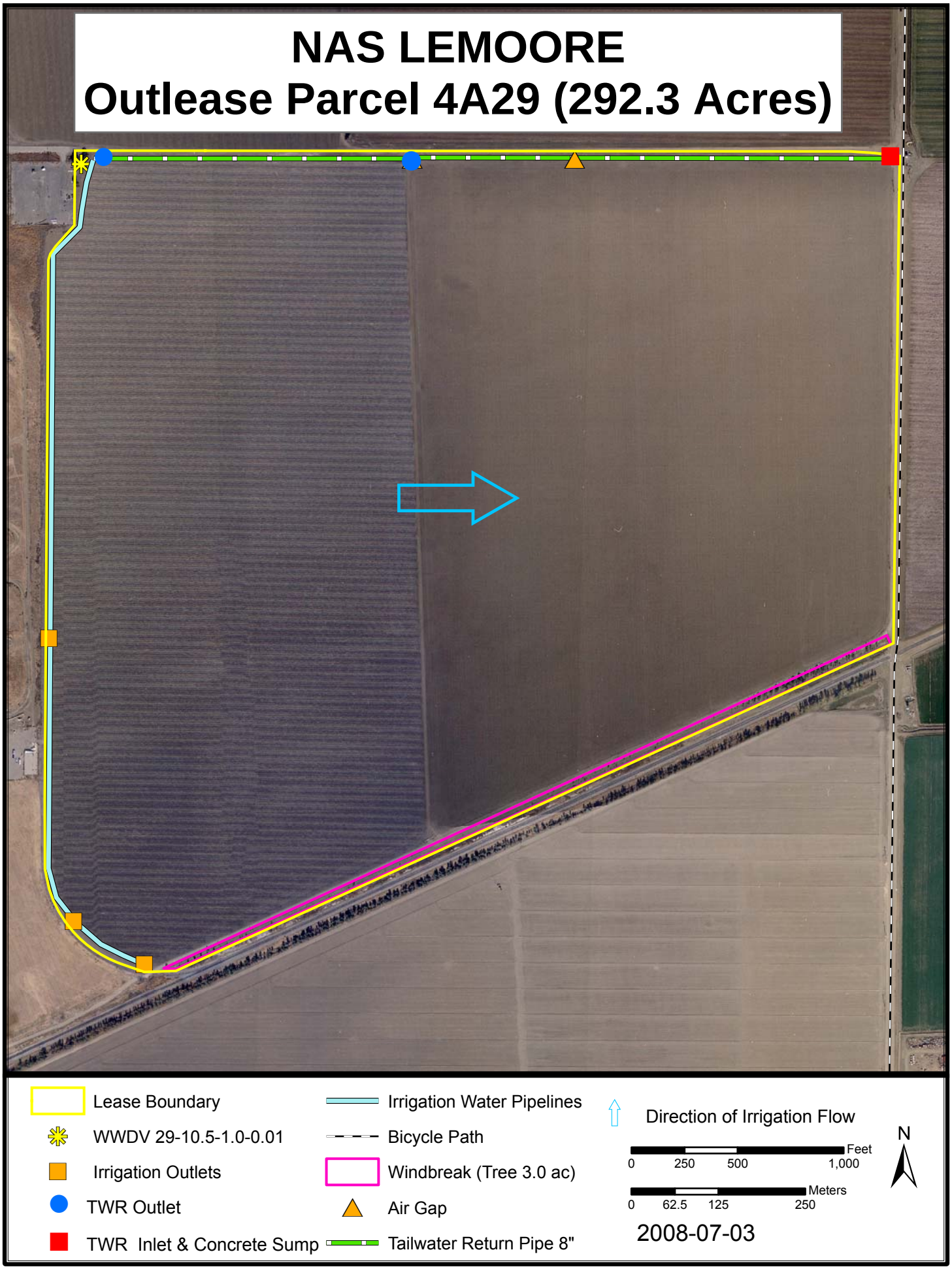
NAS LEMOORE
Outlease Parcel 4A29 (292.3 Acres)
Lease Boundary
WWDV 29-10.5-1.0-0.01
Irrigation Outlets
TWR Outlet
TWR Inlet & Concrete Sump
Irrigation Water Pipelines
Bicycle Path
Windbreak (Tree 3.0 ac)
Air Gap
Tailwater Return Pipe 8"
Direction of Irrigation Flow
Feet
0 250 500 1,000
Meters
0 62.5 125 250
N
2008-07-03

Exhibit "A"

SOIL AND WATER CONSERVATION PLAN FOR
AGRICULTURAL OUTLEASE
NAVAL AIR STATION LEMOORE, CALIFORNIA

The LESSEE shall apply conservation measures and use the premises of the Naval Air Station, Lemoore (STATION) by following the minimum requirements contained in this document. It is expected the LESSEE will perform other agricultural practices that will increase production of crops and preserve the productivity of the soil.

The LESSEE shall in no manner substantially change the contour or condition of the land without the express written authority from GOVERNMENT, and with written concurrence from the STATION. No changes regarding the LEASED use described herein or any other activity which will affect the natural resources on the LEASED PROPERTY will be made without the advance written approval from the GOVERNMENT, and with concurrence from the STATION.

1. **DESCRIPTION**: The LEASED PROPERTY is located on the Naval Air Station, Lemoore, in Kings County, California. The LEASED PROPERTY boundary is shown in Appendix "A," in the Soil and Water Conservation Plan for Agricultural Outlease. Soils of the LEASED PROPERTY in general are well to moderately well drained and are affected by salt and alkali. Depth of soil ranges from 20 to 36 inches over hardpan. Texture of the surface layer is predominately sandy loam to clay loam. The soils have relatively high water holding capacity and low water intake rates. **These soils require continuous**, **careful management to overcome the adverse effects of salts and alkali on crop production.** Such management practices include annual application of soil amendments, soil ripping, soil testing, proper irrigation water management, and proper drainage. Additionally, in order to enhance water distribution throughout the LEASED PROPERTY, management practices such as land leveling are recommended. In the past, LESSEES have achieved significant cost-effective increases in crop yields by applying gypsum, lime-sulfur, and/or sulfuric acid to the soil. Most crops grown on these soils require nitrogen and phosphorus fertilizers. Specific information on the soil characteristics of the LEASED PROPERTY is found in Appendix "C," Soil Map and Appendix "D," the Soil Capability Map Summary.

2. **USE**: The primary use of the STATION is for military activities. The agricultural LEASE operation is secondary and subject to the military requirements for the land. Typical crops grown on the irrigable fields are: cotton, barley, wheat, milo, field corn, sugar beets, tomatoes, onions, and alfalfa. The planting of vineyard, orchard, rice crops, or sod farming is not allowed.

3. **STATION COORDINATION**: The LESSEE shall coordinate their activities with the STATION'S Public Works Officer designated representative (STATION Representative) at the STATION, (559) 998-4096 or (559) 998-3251. The LESSEE shall be available at all times to correct emergency situations with regard to the LEASE. The LESSEE shall provide the STATION Representative with emergency telephone numbers where the LESSEE may be contacted during working and non-working hours. The LESSEE shall also provide at least one alternative point of contact (name, address, and phone number) that may act on behalf of the LESSEE in emergency situations. The LESSEE or his alternate(s) shall be available for contact seven days per week, 24 hours per day and should arrive on STATION within two hours after being notified in any way of an emergency.

4. **PLANTING SCHEDULE/CROPPING RESTRICTIONS**: The LESSEE shall plan and implement their planting schedule so that all crops are harvested and removed from the LEASED PROPERTY by the termination date of the final LEASE year. The GOVERNMENT does not guarantee any extension of the LEASE term for the sole purpose of harvesting crops. CROP ROTATION IS REQUIRED IF LESSEE PLANTS COTTON. LESSEE must plant crops other than cotton for at least one full year of the LEASE.

Due to concerns with Bird Air Strike Hazards (BASH) and aircraft operations, crops to be grown on Parcels 4A05, 4A06, 4A08, 4A61 and 4A62 are limited to tomatoes, cotton, and/or alfalfa and Parcel 4A42 is limited to tomatoes, cotton and/or corn. Alfalfa is restricted from being planting on Parcel 4A42's LEASED PROPERTY. If LESSEE wishes to plant crops other than those crops approved herein on any of the above-referenced parcels, LESSEE must submit a written request to do so to the GOVERNMENT, and LESSEE must receive written approval prior to planting. The GOVERNMENT is currently conducting a Wildlife Hazard Assessment in order to determine if these restrictions are adequate for BASH and aircraft operations. The GOVERNMENT reserves the right to change these cropping restrictions, based on results and recommendations from the Wildlife Hazard Assessment.

5. **IRRIGATION WATER AVAILABILITY**: Water for irrigation is available from the Westlands Water District (WWD). Laterals and meters have been installed by WWD, see Exhibit "A" for location. **The GOVERNMENT makes no guarantee implied or expressed regarding the quality, quantity or cost of water available, or that may become available, from WWD.** The LESSEE shall make arrangements for obtaining water from the Westlands Water District, P.O. Box 5222, (567 West Shaw Street) Fresno, California, 93755, (559) 224-1523. At this time, the STATION has entered into a Supplemental Water Agreement with WWD to acquire up to an additional 10,000 ac. ft. of Central Valley Project (CVP) irrigation water entitlement for agricultural uses. LESSEE has the option to request such water through WWD each year. No irrigation water or water provided is to be directed onto lands off the STATION PROPERTY without prior written approval of the GOVERNMENT. No irrigation water is to be brought onto the STATION PROPERTY without prior approval by the STATION Representative. The LESSEE shall submit a written request and Water Quality Test, outlined in Paragraph 6.A.3.b. below, to the STATION Representative in order to utilize irrigation water from a source other than Westlands Water District or STATION Groundwater Wells.

A. IRRIGATION WATER USE.

1) The LESSEE also **agrees to pay** all land based charges (LBC) assessed by WWD as required by Clause 3 (b) of this LEASE.

2) **LESSEE hereby agrees to pay all** irrigation water surcharges as required by Clause 3 (c) of this LEASE.

B. GROUNDWATER USAGE. Parcels 4A03, 4A06, 4A10, 4A11, 4A15, 4A17, 4A27, 4A39, 4A42, 4A49, 4A51, 4A54 and 4A61 Fields 3 & 8 have a well located on the LEASE PROPERTY, with groundwater dedicated for use on the parcel. Groundwater from well(s) located on Parcels 4A53, 4A55, and 4A57 is dedicated for use by the LESSEE on Parcel 4A58. The LESSEE on 4A47 shall not use the well located on the LEASE PROPERTY. **The GOVERNMENT makes no guarantee, implied or expressed, regarding the condition of the above-referenced wells, or the quality or quantity of the water available, or that may become available, from such wells.** The language below pertains to parcels that have a well located on the LEASE PROPERTY, except for those wells dedicated to Parcel 4A58.

1) The LESSEE shall NOT move Groundwater off of the STATION at any time. The LESSEE is permitted to pump one (1) acre foot per acre of the Parcel the well is associated with, per calendar year, at no additional charge.

2) As additional consideration, the LESSEE shall pay Groundwater Fee(s) for water pumped in excess of one (1) acre foot per acre of the Parcel the well is associated with. The Groundwater Fee(s) are summarized in Table 1 and described in detail as follows:

(a) The Groundwater Fee(s) are dependent on the WWD annual CVP agricultural water allocation (Allocation). The Groundwater Fee(s) will be based on the Allocation as of April 1st of each calendar year

(b) Groundwater Fee(s) Table:

Table 1: Groundwater Fee(s) Table

Allocation (%)*	**0.0 - 1.0 acre feet (AF)/ac**	**>1 - 2.0 AF/ac**	**> 2 AF/ac**
0 - 40	No charge	$87 / AF	[$87 + (0.5 x WWD CVP Rate)] / AF
41 - 60	No charge	[$87 + (0.5 x WWD CVP Rate)] / AF	[$87 + WWD CVP Rate] / AF
≥ 61	No charge	[$87 + WWD CVP Rate] / AF	[$87 + (1.5 x WWD CVP Rate)] / AF

* Based on WWD CVP allocation as of April 1 of each calendar year
** $87 is equal to the Irrigation Water Surcharge outlined in Clause 3(c) of the LEASE.

(c) In a year when the Allocation is zero (0) to forty (40) percent the Groundwater Fee(s) shall be calculated as follows:

1. Groundwater pumped in excess of one (1) acre foot per acre, up to and including two (2) acre feet per acre, for the Parcel the well is associated with, shall be charged Groundwater Fee(s) equal to the Irrigation Water Surcharge Rate of $87 outlined in Clause 3(c) of the LEASE.

2. Groundwater pumped in excess of two (2) acre feet per acre of the Parcel the well is associated with, shall be charged Groundwater Fee(s) equal to one half of the current year's WWD CVP agricultural water rate, PLUS the full Irrigation Water Surcharge Rate of $87 outlined in Clause 3(c) of the LEASE.

(d) In a year when the Allocation is forty-one (41) to sixty (60) percent the Groundwater Fee(s) shall be calculated as follows:

1. Groundwater pumped in excess of one (1) acre foot per acre, up to and including two (2) acre feet per acre for the Parcel the well is associated with, shall be charged Groundwater Fee(s) equal to one half of the current year's WWD CVP agricultural water rate, PLUS the full Irrigation Water Surcharge Rate of $87 outlined in Clause 3(c) of the LEASE.

2. Groundwater pumped in excess of two (2) acre feet per acre for the Parcel the well is associated with, shall be charged Groundwater Fee(s) equal to the current year's WWD CVP agricultural water rate, PLUS the full Irrigation Water Surcharge Rate of $87 outlined in Clause 3(c) of the LEASE.

(e) In a year when the Allocation is greater than sixty (60) percent, the Groundwater Fee(s) shall be calculated as follows:

1. Groundwater pumped in excess of one (1) acre foot per acre, up to and including two (2) acre feet per acre for the Parcel the well is associated with, shall be charged Groundwater Fee(s) equal to the current year's WWD CVP agricultural water rate, PLUS the full Irrigation Water Surcharge Rate of $87 outlined in Clause 3(c) of the LEASE.

2. Groundwater pumped in excess of two (2) acre feet per acre for the Parcel the well is associated with shall be charged Groundwater Fee(s) equal to one and one half (1.5) times the current year's WWD CVP agricultural water rate, PLUS the full Irrigation Water Surcharge Rate of $87 outlined in Clause 3(c) of the LEASE.

(f) In the event WWD does not establish a CVP agricultural water rate, the CVP rate for the purpose of calculation of Groundwater Fee(s) shall be set at $200.

(g) Any ground water moved between LESSEES shall be moved only after LESSEE has submitted a written request to do so, and received written approval as per Clause 5(h) of the Soil and Water Conservation Plan, as set forth below.

(h) LESSEE is encouraged to share subsurface water with other LESSEES on the STATION, but LESSEE will still be charged for water pumped in excess of one (1) acre foot per acre of the Parcel the well is associated with, in accordance with the terms set forth above. Prior to sharing any subsurface water with other LESSEES on the STATION, LESSEE must submit a written request to do so, and receive written approval from the Natural Resources Representative. LESSEE must submit the written request at least 48 hours in advance of sharing subsurface water with another LESSEE on the STATION. If authorized to share subsurface water with another LESSEE on the STATION, LESSEE may charge that corresponding LESSEE no more than the Groundwater Fee(s) outlined in the Soil and Water Conservation Plan, plus any associated utility costs

.

3) The GOVERNMENT is currently conducting a Hydrology Study on the STATION. The GOVERNMENT reserves the right to unilaterally impose Groundwater pumping restrictions and to change and impose additional Groundwater Fee(s), based on results and recommendations from the Hydrology Study. In the event the GOVERNMENT restricts or otherwise changes Groundwater pumping, a unilateral modification to the contract will be issued and provided to the LESSEE.

C. IRRIGATION WATER AVAILABLE AND ACREAGE FARMED. If the LESSEE is not able to place the entire LEASED PROPERTY into irrigated agricultural productivity; due to the unavailability of irrigation waters from the regional supplier (WWD), or lack of sufficient ground water, a LEASE rental adjustment shall be allowed as follows:

1) The LESSEE shall submit a written request for a rental adjustment for that portion of the LEASED PROPERTY not placed into agriculture production.

2) The STATION shall certify acreage not placed into agricultural production.

3) Rental adjustment shall be determined by dividing the annual rent rate by the total LEASE acreage from Clause 3: RENT of the LEASE; and then multiplying this $/acre/year factor by the number of acres not placed into irrigated agricultural production.

4) Upon certification of the acreage by the STATION, the GOVERNMENT shall initiate a bilateral modification to the LEASE to adjust the annual rent accordingly.

6. **CONSERVATION WORK**: It is the intent of the GOVERNMENT that the land be utilized for multiple uses including military activities, agriculture, wildlife habitat, recreation, and a soil and water conservation program on a scheduled basis as outlined in Appendix "B," Outline of Conservation Work. Protection of the STATION'S resources from deterioration by erosion, wildfires, noxious weeds, rodents and pest infestations, or other detriments is considered part of the sound land management to be carried out by the LESSEE. These conservation measures provide for the long-term productivity of the LEASED PROPERTY while protecting other natural resources and providing an opportunity for an economic return to the LESSEE. The GOVERNMENT hereby reserves the right for persons and/or entities other than the LESSEE to conduct conservation programs on the LEASED PROPERTY.

A. NON-REIMBURSABLE WORK:

1) IRRIGATION MANAGEMENT.

(a) IRRIGATION DITCHES. All irrigation ditches shall be maintained free of weeds, silt and debris by the LESSEE, at LESSEE'S own expense. All ditches shall be constructed at least eight (8) feet from the outside edge of the ditch to the utility poles, survey monuments and manholes. LESSEE shall repair immediately all leaking irrigation ditches to prevent soil erosion and to provide unimpaired vehicle access between parcels. Irrigation ditches shall not be constructed across a road. LESSEE shall maintain a 10 foot buffer between the outside edge of ditches and underground utilities. Borders and/or furrows shall be constructed as needed for an efficient distribution of irrigated water and collection of tail-water to be returned by the designed systems. Permanent water control structures, if needed, shall be installed by the LESSEE at their own expense. Said structures shall be constructed to USDA Natural Resources Conservation Service (NRCS) specifications and shall remain the PROPERTY of the GOVERNMENT upon termination of the LEASE.

(b) IRRIGATION TAIL WATER RECOVERY SYSTEMS. Irrigation tail water recovery systems have been installed on all parcels to conserve and recycle irrigation water and to prevent any tail water from leaving the parcel of origin. **Requirements by the San Joaquin Valley Regional Water Quality Control Board (SJVRWQCB) require that no irrigation tail-water is to leave the parcel of origin**. Any irrigation tail water discharge shall be permitted as required by the SJVRWQCB. All permanent improvements such as sumps and buried pipelines are the PROPERTY of the GOVERNMENT that shall be used and maintained by the LESSEE at their own expense. The outboard sides of sump levees shall be maintained free of weeds year-round by the LESSEE at their own expense. To maintain the sump in a clean, weed-free condition, the LESSEE, at their own expense,

shall annually remove accumulated silt from the tail water sump and spread it evenly onto surrounding areas. Prior to expiration of the LEASE, or after termination and prior to surrender of the LEASE, and at the LESSEE'S expense, sumps shall be restored to their original capacity. All portable equipment such as pumps and motors shall remain the PROPERTY and responsibility of the LESSEE.

(c) DRAIN DITCHES AND CANALS. All ditches and canals must be maintained free of weeds year-round by the LESSEE, at LESSEE'S own expense. While the GOVERNMENT does not guarantee agricultural suitability of the water in the main STATION drains or canals, LESSEES of parcels adjacent to storm drain ditches or canals may, pending the STATION'S approval, install temporary coffer dams and pump water for LESSEE'S use, provided this water is to be used to irrigate crops that are not for human consumption. The LESSEE shall maintain, at LESSEE'S own expense, the drain ditches, canals and appurtenant water control structures which border or are within the LESSEE'S LEASED PROPERTY.

(d) SURFACE STORM WATER RUNOFF. All surface storm water runoff discharges shall be monitored and permitted in accordance with the California Regional Water Quality Control Board standards.

2) GROUND WATER WELL EQUIPMENT AND APPURTENANCES: For LEASES with irrigation wells dedicated for use by the LESSEE (Clause 5.b. Ground Water Usage), the LESSEE shall provide ground water well equipment and appurtenances for the irrigation well on the LEASED PROPERTY, at LESSEE'S own expense. LESSEE shall equip well with a water meter certified prior to starting well and shall notify STATION Representative at least 48 hours prior to installing or replacing meters. Upon replacement of a meter LESSEE shall have meter certified. LESSEE shall maintain well log records of all well usage and maintenance and submit records to the STATION Representative by 31 December of each calendar year. The LESSEE shall supply and start up the existing well at LESSEE'S own expense. LESSEE shall retain ownership of all well appurtenances with the exception of all electrical improvements required to operate the well, i.e. electrical connections from local power sources and electrical panels, meters, etc. Electric motors over 250 horsepower are not allowed. The GOVERNMENT makes no guarantee, implied or expressed, regarding quantity, quality, or availability of water, well equipment, well appurtenances, or the pumping costs of water. Replacement, major repair and/or maintenance of all the aforementioned well equipment and appurtenances are not reimbursable. If LESSEE elects to use fuel, LESSEE shall bring secondary containment into compliance with 40 C.F.R. Part 112, prior to storing any fuel in any tank on the LEASED PROPERTY. LESSEE shall contact STATION Representative for guidance regarding 40 C.F.R. Part 112 compliance. LESSEE's compliance with 40 C.F.R. Party 112 shall be confirmed in writing by a STATION Representative. At the termination of the LEASE, the well casing, well cover, electrical boxes and electrical improvements all remain the PROPERTY of the GOVERNMENT. At LESSEE'S own expense, LESSEE shall be responsible for the safety and security of the well, and shall provide temporary well cover(s) as required when surface well equipment is removed.

3) WATER QUALITY TESTING: The water quality tests and reports shall be performed by an independent testing laboratory certified for such service and shall contain chemical and physical parameter criteria required by the STATION Representative.

(a) STATION GROUNDWATER WELLS: LESSEE shall provide for one independent well water quality test per year for each year that they utilize the well for agricultural purposes. The LESSEE shall provide copies of all documents pertaining to each water quality test to the STATION Representative within 30 days of well start-up.

(b) OFF-STATION WATER: The LESSEE shall provide one independent water quality test per year for each year that they utilize water from a source other than Westlands Water District or STATION Groundwater Wells. Lessee shall submit the water quality test results and written request to the STATION Representative per Paragraph 5 above annually prior to bringing off-station water onto the STATION.

4) HARVESTED CROP STORAGE. LESSEE may store harvested crops only in areas designated for such use by the STATION Representative.

5) WEED AND PEST MANAGEMENT: The LESSEE shall, at LESSEE's own expense, continuously control all noxious and undesirable weeds and rodents, insects and other pests as identified by the California Invasive Plant Council and the Station Integrated Pest Management Coordinator (IPMC) within the LEASED PROPERTY and is responsible for proper application of pesticides. The LESSEE shall control weeds and pest through either non-chemical means or by pesticide application. Weeds are defined as any vegetation growing at a location where it is undesirable. Maximum height of all undesirable weeds is 10 inches and weeds shall not be allowed to produce seed. Borders, field edges, and drainage and irrigation ditches shall be kept essentially weed free.

(a) ANNUAL PLAN FOR PEST MANAGEMENT: The LESSEE shall develop an Agricultural Outlease Partner Pest Management Plan and submit an electronic copy to the IPMC and the NAVFAC SW Contact by **January 15th** of each calendar year. Appendix "E" includes instructions for the Plan and a blank sample form. An electronic version of the blank document is available upon request from the IPMC.

(b) PEST MANAGEMENT REPORTING. All pest management operations including pesticide use and non-chemical control shall be reported on the NAVFAC Online Pesticide Reporting System (NOPRS). The LESSEE shall request an account from the IPMC to access and receive instructions on using NOPRS by **January 15th** of the first year of the LEASE. The LESSEE shall report all pesticide use to the IPMC via the NOPRS. The LESSEE shall submit an annual report by **December 31th** of each year. In the last year of the LEASE, the LESSEE shall submit the annual report **60 days** prior to the LEASE expiration date.

(c) NON-CHEMICAL WEED CONTROL: If the LESSEE elects to control the weeds by non-chemical means such as mowing or discing, the operation shall be accomplished by the LESSEE at his own expense at minimum twice during the lease year; once prior to the maturing of weed seeds, and once again to control the late growing weeds.

(d) CHEMICAL WEED AND PEST CONTROL. The term "pesticide" includes insecticides, herbicides, fungicides, miticides, rodenticides and algaecides. LESSEE shall be responsible for complying with the Chief of Naval Operations Instruction (OPNAVINST) 6250.4 series regarding Navy and Marine Corps installations' pest management programs, the STATION's Integrated Pest Management Plan (IPMP), all relevant DoD guidance and instructions, as well as all federal, state and local pesticide and pest management and field worker safety laws, regulations and standards, including but not limited to obtaining required permits. The IPMC

shall, upon request of the LESSEE, provide to the LESSEE pertinent DoD guidance and a copy of the STATION's IPMP. The LESSEE is limited to using only pesticides on the STATION's pesticide authorized use list which is found on NOPRS.

In the event the LESSEE wishes to use a pesticide that is not included in the STATION's pesticide authorized use list as shown on NOPRS, the LESSEE shall submit a list of requested pesticides and EPA registration numbers with their annual Plan. Pesticides shall be reviewed by the Department of the Navy and, if approved, will be added to the STATION's pesticide authorized use list. Only pesticides on this list shall be used on the LEASED PROPERTY. **The pesticide methyl bromide is not allowed for use on the LEASE PROPERTY.** Any changes in the LESSEE'S pesticide application program must be reported to and approved by the IPMC prior to application.

1. PESTICIDE APPLICATION AND DISPOSAL. The LESSEE shall be solely liable for any damage to government property from pest management operations including pesticide usage. All pesticide containers shall have the manufacturer's label attached. Service containers shall have a label indicating the contents of the container. Material safety data sheets (MSDS) shall be maintained at the site. All pesticides shall be applied in a manner consistent with the manufacturer label directions. Empty pesticide containers and application equipment shall be cleaned in a manner that prevents environmental contamination. All empty pesticide containers shall be removed from the installation in a timely manner, such manner to be determined by the IPMC or applicable federal, state, and local regulations.

2. PRIVATE APPLICATOR CERTIFICATION. LESSEEs who apply restricted use pesticides or who train others to apply any pesticides must have a Private Applicator Certification. All persons who apply any pesticides must be trained by a qualified person (i.e. a Certified Private Applicator or an entity with a Commercial Applicator Certification). This includes, but is not limited to, training on pesticide labels, material safety data sheets, and pesticide safety. Unlicensed persons that apply restricted use pesticides shall be under the supervision of a certified applicator. In addition, the LESSEE must provide workers that enter pesticide-treated fields with pesticide safety training. Applicators that are hired by the LESSEE to apply any pesticides must comply with the requirements for Commercial Applicator Certification. All applicators of any pesticides shall wear Personal Protective Equipment as required by the product label directions. This may include, but is not necessarily limited to: body covering (long sleeved shirt/pants or overalls), goggles and/or face shields, aprons, gloves, hats, foot coverings (work boots) and/or respirators.

3. AERIAL PESTICIDE APPLICATION. **At least 24 hours** prior to any aerial application of pesticides and/or fertilizers, or any other use of aircraft on LEASED PROPERTY, LESSEE shall submit a written notification and request for approval to the IPMC. **The LESSEE shall NOT proceed with any aerial application or any other use of aircraft on LEASED PROPERTY without prior approval of the IPMC.** Each and every use of aircraft on the LEASED PROPERTY shall have such prior approval. If the IPMC, the Public Works Officer or the STATION Air Operations Representative determines that crop dusting planes pose a hazard to or are incompatible with military air operations or conditions, he/she may deny permission for crop dusters to fly over the LEASED PROPERTY. **Civilian or agricultural aircraft are absolutely prohibited from operating within or over the "Operations Area" that surrounds or is between the runways.** Information needed for a flight request

is shown on Appendix “E.” No defoliants or any other agricultural chemicals that contain Karmex, are to be applied to any area where wind-borne drift will place this chemical in contact with wind-breaks or any other STATION plantings or landscaped areas. LESSEE shall replace any and all trees or shrubs that are damaged or killed as a result of chemical drift or aerial applicator flyovers.

(e) MOSQUITO ABATEMENT. The LESSEE shall not permit tail water or runoff to stand in ditches or in fields for longer than three days between irrigation operations. LESSEE is responsible for the non-chemical abatement of mosquitoes and shall be billed by the STATION for any and all mosquito control expenses attributed to the farming activities of the LESSEE on the STATION. Water ponding in areas identified as Conservation Areas shall not be treated without advance coordination with the Environmental Management Department. General guidelines for the control of mosquitoes on irrigated farmland shall be provided to the LESSEE if requested from the IPMC or the Kings County Mosquito Abatement District (559) 584-3326.

(f) RODENT CONTROL. Rodent Control measures shall be undertaken by the LESSEE, at LESSEE’s sole cost and expense, so as to prevent damage to the Leased Property. All rodenticides shall be listed in the LESSEE’s Pest Management Plan and shall be included in the STATION’s pesticide authorized use list. Appendix “E” includes information on the proper bait stations to use for ground squirrel control within or in near proximity to the kangaroo rat habitat. The LESSEE’s Pest Management Plan shall indicate if the LESSEE intends to use bait stations.

(g) BIRD CONTROL. All control measures taken to protect the LESSEE’s crops from damage by birds shall be included in the LESSEE’s Annual Pest Management Plan and shall be approved in advance by the IPMC. No chemical avian pesticides will be allowed on the LEASED PROPERTY The LESSEE’s Annual Pest Management Plan shall include, but need not be limited to, the bird species, control measures, and estimated take of each species.

6) DUST CONTROL. At LESSEE’S own expense, LESSEE shall control excessive dust generated from LESSEE’S activities on the unpaved roads on the LEASED PROPERTY through the application of water.

7) MINIMUM TILLAGE & LAND LEVELING. The LESSEE shall practice "minimum tillage" where practical and feasible for LESSEE’S farming operations. The LESSEE shall vary the depth of plowing from year to year to prevent a "plow sole or pan" from forming and to facilitate water penetration. To reduce possible hazard to aircraft, tillage operations shall be scheduled to minimize the time during which soil will be subject to wind erosion and dust production. Additionally, in order to enhance water distribution throughout the parcel, management practices such as land leveling are recommended at the LESSEES own expense.

8) SOIL RIPPING & DAMAGES TO GOVERNMENT PROPERTY. Soil ripping or chiseling is a very beneficial practice for enhancing water penetration and reducing toxic salt accumulations. In order to avoid damaging GOVERNMENT improvements/utilities LESSEE shall maintain a 10 foot buffer around all GOVERNMENT improvements, underground utilities and aboveground utilities when ripping, chiseling or slip plowing. Additional information regarding the existence, location, and depth of underground utilities may be obtained from the STATION Representative. Other signs, poles, piezometers, survey markers, or structures adjacent to or included within the LEASED PROPERTY shall not be damaged. The LESSEE shall be held liable for all damages to GOVERNMENT owned structures, utilities, monuments, fences and/or

improvements which result from outlease activities. The STATION shall bill the LESSEE for any and all expenses for repairing damaged GOVERNMENT PROPERTY, where damage is attributed to activities of the LESSEE on the STATION.

9) ROAD ACCESS. The roadways associated with this LEASE primarily provide for access by emergency vehicles in the event of a downed aircraft. LESSEE shall not, at any time, during the LEASE term allow or permit any vehicle, equipment, materials, harvested crop, crop residue, irrigation water or water transport pipelines to block, obstruct or in any way render any roadway associated with this LEASE impassible to vehicles.

(a) ACCESS ROAD REQUIREMENTS. A 15-foot wide access road shall be provided and maintained by each LESSEE along the LEASED PROPERTY boundaries that are contiguous to or abut other parcels. LESSEES shall provide and maintain a 20-foot wide access road along the LEASED PROPERTY boundaries that are not contiguous to or do not abut other parcels.

(b) SECURITY BUFFER. Boundary lines for all LEASED PROPERTY begin 50 feet from STATION security fences. All STATION security fences shall have a 50-foot wide security buffer, which includes the STATION security road, between the security fence and the LEASED PROPERTY. LEASES abutting all STATION security fences shall maintain a 15-foot wide LEASE access road adjacent to the boundary line for the LEASED PROPERTY. LESSEE is not required to maintain the 50-foot buffer. LESSEES shall not use the STATION security road as a turn-around area when preparing, cultivating or harvesting within the LEASED PROPERTY. In the event, the LESSEE's farming equipment discards residue from the field, such as mud or dirt clods, or damages the security road, the LESSEE shall repair the security road within 24 hours. Upon request, the STATION Representative will supply a schematic of the security buffer. See Exhibit "A" for location of security fences.

10) ROAD DAMAGE PREVENTION. The LESSEE shall not maneuver "track-laying" or "spike-wheeled" vehicles over the STATION'S paved roads unless road protective measures are taken. LESSEE shall be billed by the STATION for any and all road damage repairs attributed to the activities of the LESSEE.

11) EROSION CONTROL. LESSEE, at their own expense, shall use prudent erosion control measures to reduce soil loss, or as requested by the GOVERNMENT.

12) WINDBREAK MAINTENANCE: Windbreak plantings shall be maintained once a year for the duration of the LEASE. Maintenance shall consist of weed control throughout the windbreak. Weed whips/string trimmers are permitted to be used so long as they are not used within six inches of the base of any tree to prevent girdling. Weeds shall not be left standing at the base of the trees. Weed maintenance along Oleander windbreaks shall be preformed along inner and outer edges. Periodic pruning, dead and down limb and tree removal as well as any limbs that appear to be in danger of falling. See Exhibit "A" for location of windbreak(s).

13) FIRE PREVENTION. The LESSEE shall comply with the STATION'S fire control and fire prevention regulations. LESSEE shall be liable for any fire damage to GOVERNMENT owned structures attributed to the activities of LESSEE on the STATION. LESSEE shall also be liable for improvements and costs of required fire suppression attributed to the activities of the LESSEE on the STATION.

(a) EQUIPMENT. All engine driven equipment used by the LESSEE on the STATION shall be equipped with properly operating spark arresters, mufflers, and tailpipe assemblies. In addition, any vehicle having a catalytic converter shall not be driven through areas of dry, combustible material due to the extreme heat generated by this device.

(b) STORAGE OF EQUIPMENT AND FLAMMABLE MATERIALS. LESSEE shall refer to Special Provisions Clause 34 (a) of the LEASE for information regarding fuel and oil storage on the LEASED PROPERTY. Seasonal equipment, such as land planes, cotton module builders, cotton harvesters, tomato harvesters, tomato trailer dollies, etc., may be stored on site during the period of use and thirty (30) days before and after use. All seasonal equipment not in use cannot be stored on site and must be removed from the STATION within thirty (30) days of completion of use.

(c) SPARK-PRODUCING EQUIPMENT. Arc, gas, TIG ("Heli-Arc") welders shall be used only with a fire extinguisher in areas designated for storage by the STATION Representative or for repairs on a specific piece of equipment parked on and surrounded by at least 50 feet of bare soil in all directions.

(d) CROP RESIDUE.

1. Use of a Conservation tillage program is encouraged (see Paragraph 6.a.7, Minimum Tillage).

2. If a conservation tillage program is not used then crop stubble or residue shall be disced into the soil within two (2) weeks after harvest.

3. All fields shall be disced under prior to the termination/expiration of the LEASE, unless permission is granted from the GOVERNMENT to do otherwise.

4. Grazing (except for sheep grazing down alfalfa) and fire shall not be used to eliminate residue.

5. All parcels, or portions thereof, planted to cotton are subject to local county regulations concerning planting and "plow down" dates.

14) DEBRIS REMOVAL. The LESSEE shall maintain all areas of the LEASED PROPERTY in a neat, orderly appearance at all times. Trash, garbage, broken down or discarded equipment or material shall be removed from the LEASED PROPERTY immediately. The LESSEE, at his own expense, shall dispose of all debris from normal farming practices generated on the LEASED PROPERTY to the satisfaction of the STATION Representative. Within 30 days of being notified by any representative of the GOVERNMENT or the STATION, the LESSEE shall correct all deficiencies referenced in such notification. Burning is permitted as long as the LESSEE follows all requirements of the STATION Contact and local Air Pollution Control District.

15) FALLOW LAND MANAGEMENT. In advance of the growing season, if the LESSEE elects to lay fallow any portion of the LEASED PROPERTY for whatever reason(s), the area shall be maintained free of weeds until the land is again cropped normally. All fallowing and related expenses, including but not limited to expenses related to maintaining the fallow lands free of weeds, shall be borne by LESSEE.

16) SOIL TESTING. At the LESSEE'S own expense, soil tests shall be conducted every other year beginning the first year of the LEASE. **All collection, processing, and reporting shall be performed by an independent testing laboratory certified for such services. When completed, reports shall be submitted by the testing laboratory to the STATION Representative.** The soil tests are to be submitted to the STATION Representative within 45 days of the test completion, and in no event any later than 31 December of the test year. Testing laboratories will collect samples representative of each forty acre aliquot part of the LEASE. Composite samples are to be randomly collected across each forty acre track and be representative of both one (1) and two (2) foot depths. The minimum chemical and physical parameter criteria required for the soil tests are pH, electromagnetic conductivity, Nitrogen, Phosphorus, Potassium, Calcium, Magnesium, Sulfur, Sodium, Chloride, Soil Organic Matter, and Exchangeable Sodium Percentage (ESP) or Sodium Absorption Ratio (SAR). As a part of the soil testing, narrative evaluations and recommendations for gypsum requirements and other soil amendment requirements shall be compiled by a Certified Crop Advisor and submitted with the analytical report.

17) SOIL MANAGEMENT FOR SALINITY. (In accordance with Certified Crop Advisor recommendations resulting from soil testing, see Paragraph 5.a 16.) Gypsum with 100% purity, or its equivalent, shall be applied to the LEASE PROPERTY each year immediately following the soil test. For soil amendments equivalent to gypsum accepted by STATION Representative see Appendix "F." LESSEE should anticipate applying a cumulative amount of no less than one (1) ton of gypsum per acre per year during the LEASE term. In the event that soil testing indicates a requirement for less than half (0.5) a ton per acre of gypsum then **no gypsum application** is required for that year. Any test indicating a requirement between half (0.5) and one (1) ton per acre, LESSEE shall apply at a rate of one (1) ton per acre of gypsum. No gypsum application in any one year shall be permitted to be less than one (1) ton per acre. **LESSEE shall submit all invoices pertaining to gypsum applications to STATION Representative within thirty (30) days of application.** Proper water management and soil ripping are also recommended for reducing concentrations of salt in the soil.

18) HUNTING. Hunting on STATION is allowed only after being issued a hunting pass that is available from the Security Office at the main gate. STATION regulations prohibit firearms on the STATION except for designated hunting areas. If the LESSEE does not want hunting on the parcels, the LESSEE shall post "No Hunting" signs along the entire perimeter of the LEASED PROPERTY.

19) NOTIFICATION AND IDENTIFICATION. The LESSEE shall closely coordinate farming operations with the STATION Representative located in Bldg. 750 on the STATION, telephone (559) 998-4096 or 998-3251. The LESSEE, or his/her designated representative (as detailed in Clause 3, STATION Coordination) shall be available at all times to correct emergency situations with regard to the LEASE. The LESSEE shall provide the STATION Representative with current emergency telephone numbers where the LESSEE may be contacted during working and nonworking hours. Ingress and egress routes on and within the STATION shall be designated by the STATION Representative. LESSEE shall not use Reeves Boulevard for transport of equipment, crops, or supplies, unless otherwise authorized by STATION Security Department. Vehicles used by the LESSEE and associated LEASE employees, contractors, and agents shall meet California licensing requirements, California vehicle safety standards, California vehicle insurance requirements, and shall be registered with the STATION Security Department prior to entering restricted areas on the STATION. The LEASE document shall be presented when registering vehicles. LESSEE shall provide employee information to STATION

Security Department. All migrant farm workers shall be properly authorized to work in the United States. Any farm worker not properly authorized to work on the STATION may be held for the appropriate authorities.

20) CALIFORNIA REGIONAL WATER CONTROL BOARD & SAN JOAQUIN VALLEY AIR POLLUTION CONTROL DISTRICT. All agricultural practices on the STATION shall follow all applicable Federal, State and local requirements and standards. The LESSEE shall be knowledgeable of the applicable rules and shall notify the GOVERNMENT should compliance issues arise.

21) APIARY USE. Portions of the LEASED PROPERTY, not to exceed two (2) acres total, may be used by the LESSEE for apiary (beekeeping) purposes in conjunction with crop production (i.e. pollination) . LESSEE shall submit a request in writing to the STATION Representative and such request must be approved in writing prior to bringing hives on STATION. Laydown areas must be approved by the STATION Representative and will not be allowed within one (1) mile of the STATION'S Bee License's Laydown Areas, or within 0.25 miles of any roads or STATION gates

The following provisions apply to apiary use on the LEASED PROPERTY:

(a) Water must be available to the bees at all times.

(b) No more than 75 single hives, or their equivalent in multiple hives, shall be placed at any site.

(c) All hives shall be arranged at each site in an orderly manner and the ground kept free of weeds, litter, and debris.

(d) No storage of beekeeping supplies, vacant hives, or other similar material is allowed.

(e) The bee owner shall follow the directives of the California Food and Agricultural Codes Clause(s) 2900 regarding beekeeping. If there is any indication of improper management the hives shall be immediately removed. Every attempt must be made to prevent the introduction of Africanized honey bees to the STATION.

B. REIMBURSABLE PROJECTS.

Soil and Water Conservation measures determined to be in the best interest of the GOVERNMENT, may be approved by the GOVERNMENT for construction by the LESSEE, on a reimbursable basis. The conditions set forth in Clause 7 (b) through (d) Conservation and Maintenance Work, of the LEASE shall apply when performing any such reimbursable work. Reimbursable projects may include, but are not limited to new irrigation facility construction and tree planting (windbreaks).

1) In order to prevent a potential cotton boll weevil outbreak the LESSEE shall destroy all cotton plants on the LEASED PROPERTY in accordance with California Food and Agricultural Code Section 5781-5786 and California Code of Regulations (3 CCR 3595) for Cotton Pests Host-Free Districts. The LEASED PROPERTY shall be disced in order to comply with 3 CCR 3595 (e) (2) Tillage. This section states "the land on which any cotton plants were growing during the preceding season shall be tilled in such a manner that stubs are uprooted and loosened from soil around their roots. Roots, plant stubs, shredding debris and trash remaining from

harvesting or clean-up operations shall be mixed with surface soil."

Work shall begin within **5 days of award of the lease and shall be completed within thirty days**. In the event of poor weather conditions the LESSEE shall coordinate with the Station Representative regarding a delayed start date and/or completion date. Upon completion of work the Kings and Fresno County Ag Commissioner Point of Contact will inspect and provide confirmation to the Station Representative that the work has been completed in accordance with State Regulations. Additionally, the LESSEE shall submit receipts to the Natural Resources Representative upon completion of the project.

Upon satisfactory completion and acceptance of the work by the GOVERNMENT, payment shall be made in accordance with Clause 7, Conservation and Maintenance Work, of the LEASE and as scheduled in the Conservation Plan of Operations, Appendix "B".

7. **TECHNICAL ASSISTANCE AVAILABLE:**

(1) Public Works Office (Station Representative)
Environmental Resources and Planning
Designated representative(s) or Integrated Pesticide Management Coordinator (IPMC)
Naval Air Station Lemoore
750 Enterprise Avenue
Lemoore, California 93246-5051
Telephone: (559) 998-4096 or 998-3251

(2) NAVFAC SW (Natural Resources Representative)
Integrated Product Team (IPT) Desert
Naval Facilities Engineering Command Southwest
Attn: Carol Dahlstrom, Code: JE20.CD
1220 Pacific Highway
San Diego, California 92132
Telephone: (619) 532-2269

(3) USDA NRCS
U.S. Department of Agriculture
Natural Resources Conservation Service
Kings County Government Center
680 Campus Drive, Suite E
Hanford, California 93230
Telephone: (559) 584-9209

(4) KMAD
Kings Mosquito Abatement District
P.O. Box 907
Hanford, California 93230
Telephone: (559) 584-3326

Soil and Water Conservation Plan for Agricultural Outlease
Outline of Conservation Work

Continuous Responsibility

PARAGRAPH	DESCRIPTION	NOTES
6.A.1.	Irrigation Management	
6.A.1.a.	Irrigation Ditches	
6.A.1.b.	Irrigation Tail Water Recovery System	
6.A.1.c.	Drain Ditches and Canals	
6.A.1.d.	Surface Storm Water Runoff	
6.A.2.	Groundwater Well Equipment and Appurtenances	Submittal Due for Parcels with wells
6.A.3.	Water Quality Testing	Submittal Due for Parcels with wells and/or Parcels with approval to use off-station water
6.A.3.a.	Station Ground Water Wells	
6.A.3.b.	Off-station Water	
6.A.4	Harvested Crop Storage	
6.A.5	Weed and Pest Management	
6.A.5.a.	Annual Plan for Pest Management	Submittal Due
6.A.5.b.	Pest Management Reporting	Reporting Requirement
6.A.5.c.	Non-chemical Weed Control	
6.A.5.d.	Chemical Weed and Pest Management	
6.A.5.d.1.	Pesticide Application and Disposal	
6.A.5.d.2.	Private Applicator Certification	
6.A.5.d.3.	Aerial Pesticide Application	Aerial Application Notification Requirement
6.A.5.e.	Mosquito abatement	
6.A.5.f.	Rodent Control	
6.A.5.g.	Bird Control	
6.A.6.	Dust control	
6.A.7.	Minimum Tillage & Land Leveling	
6.A.8.	Soil Ripping & Damages to Government Property	
6.A.9.	Road Access	
6.A.9.a.	Access Road Requirements	
6.A.9.b.	Security Buffer	
6.A.10.	Road Damage Prevention	
6.A.11.	Erosion Control	
6.A.12.	Windbreak Maintenance	
6.A.13.	Fire Prevention	
6.A.13.a.	Equipment	
6.A.13.b.	Storage of Equipment and Flammable Materials	
6.A.13.c.	Spark-Producing Equipment	
6.A.13.d.	Crop Residue	
6.A.14.	Debris Removal	
6.A.15.	Fallow Land Management	
6.A.16.	Soil Testing	Submittal Due
6.A.17.	Soil Management for Salinity	Gypsum Application Requirement
6.A.18.	Hunting	
6.A.19.	Notification and Identification	Submittal Due
6.A.20.	CA regional water control board & San Joaquin Valley air pollution control District	
6.A.21	Apiary Use	

Soil and Water Conservation Plan for Agricultural Outlease
Outline of Conservation Work

Requirements and Submittals

PARAGRAPH	DESCRIPTION	DUE	FREQUENCY
4	Crop Rotation	One Year of Lease Term	One Year of Lease Term
5.C.	Irrigation Water Available and Acreage Farmed (written request/ written concurrence)	As Applicable	As Applicable
6.A.2.	Well logs (applies to parcels with wells)	31-December	Annually
6.A.3.	Well water quality testing (applies to parcels with wells and/or parcels with approval to use off-station water)	Due within 30 days of well operation	As necessary
6.A.5.a.	Annual Pest Management Plan	15-Jan	Annually
6.A.5.b.	Navy Online Pesticide Reporting System (NOPRS) Access	15-Jan	First Lease Term
6.A.5.b..	Pest Management Reporting	31-December (1st-4th Lease Period)	Annually
		60-days prior to Lease expiration	
6.A.5.d.3.	Aerial Pesticide Application	24 Hours prior to Application	All Aerial Applications of Pesticides
6.A.16.	Soil Testing	31-December	every other year beginning the first term of the Lease
6.A.17.	Soil Management for Salinity	31-December	every other year beginning the second term of the Lease
6.A.19	Notification and Identification	Immediately	Update as necessary

Soil Map—Kings County, California
(NAS Lemoore Parcel 4A29)

Map Scale: 1:10,300 if printed on A size (8.5" x 11") sheet.

N

Meters
0 100 200 400 600

Feet
0 500 1,000 2,000 3,000

MAP LEGEND

Area of Interest (AOI)

Area of Interest (AOI)

Soils

Soil Map Units

Special Point Features

Blowout

Borrow Pit

Clay Spot

Closed Depression

Gravel Pit

Gravelly Spot

Landfill

Lava Flow

Marsh or swamp

Mine or Quarry

Miscellaneous Water

Perennial Water

Rock Outcrop

Saline Spot

Sandy Spot

Severely Eroded Spot

Sinkhole

Slide or Slip

Sodic Spot

Spoil Area

Stony Spot

Very Stony Spot

Wet Spot

Other

Special Line Features

Gully

Short Steep Slope

Other

Political Features

Cities

Water Features

Oceans

Streams and Canals

Transportation

Rails

Interstate Highways

US Routes

Major Roads

Local Roads

MAP INFORMATION

Map Scale: 1:10,300 if printed on A size (8.5" × 11") sheet.

The soil surveys that comprise your AOI were mapped at 1:24,000.

Please rely on the bar scale on each map sheet for accurate map measurements.

Source of Map: Natural Resources Conservation Service
Web Soil Survey URL: http://websoilsurvey.nrcs.usda.gov
Coordinate System: UTM Zone 11N NAD83

This product is generated from the USDA-NRCS certified data as of the version date(s) listed below.

Soil Survey Area: Kings County, California
Survey Area Data: Version 8, Aug 27, 2009

Date(s) aerial images were photographed: 6/11/2005

The orthophoto or other base map on which the soil lines were compiled and digitized probably differs from the background imagery displayed on these maps. As a result, some minor shifting of map unit boundaries may be evident.

Map Unit Legend

Kings County, California (CA031)			
Map Unit Symbol	**Map Unit Name**	**Acres in AOI**	**Percent of AOI**
139	Lethent clay loam	298.4	100.0%
Totals for Area of Interest		**298.4**	**100.0%**

Soil Number	Soil Name	Properties				Typical Profile
		Slope (in)	Depth to Restrictive Feature	Capacity of the most Limiting Layer (Ksat)	Depth to Water Table	
434	Lethent clay loam, wet, 0 to 1 percent slopes	0 to 1	20 to 39 inches to natric	Moderately well drained	About 48 to 60 inches	0 to 72 in: Clay loam
435	Lethent clay loam, 0 to 1 percent slopes	0 to 1	21 to 39 inches to natric	Moderately well drained	More than 80 inches	0 to 72 in: Clay loam
475	Posochanet clay loam, saline-sodic, wet, 0 to 1 percent slopes	0 to 1	More than 80 inches	Moderately well drained	About 48 to 60 inches	0 to 15 in: Clay loam 15 to 60 in: Stratified loam to silty clay loam
482	Calflax clay loam, saline-sodic, wet, 0 to 1 percent slopes	0 to 1	More than 80 inches	Moderately well drained	About 48 to 60 inches	0 to 26 in: Clay loam 26 to 33 in: Loam 33 to 47 in: Silt Loam 47 to 65 in: Loam
101	Armona loam, partially drained	0 to 1	More than 80 inches	Moderately high (0.20 to 0.57 in/hr)	About 0 inches	0 to 14 in: Loam 14 to 41 in: Stratified Sandy loam to clay lome 41 to 60 in: Sand
115	Gepford clay, partially drained	0 to 1	More than 80 inches	Very low to moderately low (0.00 to 0.06 in/hr)	About 0 inches	0 to 36 in: Clay 36 to 60 in: Stratified loam to clay loam
137	Lemoore sandy loam, partially drained	0 to 1	More than 80 inches	Moderately high (0.57 to 1.98 in/hr)	About 0 inches	0 to 60: Sandy Loam
139	Lethent clay loam	0 to 1	4 to 8 inches to natric	Very low to moderately low (0.00 to 0.06 in/hr)	More than 80 inches	0 to 31 in: Clay loam 31 to 60 in: Sandy loam
151	Panoche clay loam, saline-alkali	0 to 1	More than 80 inches	Moderately high to high (0.57 to 1.98 in/hr)	More than 80 inches	0 to 60: Loam
434fw	Lethent clay loam, wet, 0 to 1 percent slopes	0 to 1	20 to39 inches to natric	Moderately low to moderately high (0.06 to 0.20 in/hr)	About 48 to 60 inches	0 to 72: Clay Loam

Soil Number	Soil Name	Qualities				
		Calcium Carbonate (max)	Gypsum (max)	Salinity (max)	Sodium Absorbtion Ration (max)	Available Water Capacity
434	Lethent clay loam, wet, 0 to 1 percent slopes	2%	2%	Very slightly saline to moderately saline (4.0 to 16.0 mmhos/cm)	40.0	Low (about 4.0 inches)
435	Lethent clay loam, 0 to 1 percent slopes	2%	2%	Very slightly saline to moderately saline (4.0 to 16.0 mmhos/cm)	40.0	Low (about 4.3 inches)
475	Posochanet clay loam, saline-sodic, wet, 0 to 1 percent slopes	2%	2%	Very slightly saline to strongly saline (4.0 to 20.0 mmhos/cm)	50.0	Moderate (about 7.5 inches)
482	Calflax clay loam, saline-sodic, wet, 0 to 1 percent slopes	3%	5%	Very slightly saline to moderately saline (4.0 to 16.0 mmhos/cm)	40.0	Moderate (about 7.5 inches)
101	Armona loam, partially drained	3%	3%	Very slightly saline to moderately saline (8.0 to 16.0 mmhos/cm)	30.0	Low (about 3.7 inches)
115	Gepford clay, partially drained	15%		Very slightly saline to moderately saline (4.0 to 16.0 mmhos/cm)		Moderate (about 3.8 inches)
137	Lemoore sandy loam, partially drained	3%		Very slightly saline to moderately saline (4.0 to 16.0 mmhos/cm)	40.0	Low (about 3.7 inches)
139	Lethent clay loam	5%	3%	Slightly saline to moderately saline (8.0 to 16.0 mmhos/cm)	70.0	Very Low (about 0.8 inches)
151	Panoche clay loam, saline-alkali	3%		Nonsaline (0.0 to 0.2 mmhos/cm)		High (about 9.5 inches)
434fw	Lethent clay loam, wet, 0 to 1 percent slopes	2%	2%	Very slightly saline to moderately saline (4.0 to 16.0 mmhos/cm)	40.0	Low (about 4.0 inches)

Appendix D
Soil and Water Conservation Plan for Agricultural Outlease

(1) Pest Management Project Plan Instructions
(2) Crop Duster Request Form
(3) Modified Bait Station

AGRICULTURAL CROP PEST MANAGEMENT PROJECT PLAN INSTRUCTIONS

The purpose of the agricultural Crop Pest Management Project Plan is to provide Navy and Marine Corps installation agricultural outlease managers with information on the pest management activities and chemicals that may be used on leased property. The plan is to be completed by the Lessee and submitted to the installation's Integrated Pest Management Coordinator and the NAVFAC Southwest Contact. The form is to be updated whenever pest management practices or crops change. For the purposes of the plan, a pest includes diseases, arthropods, nematodes, weeds, rodents, and other organisms that cause harm or are detrimental to the production of the crop.

1. The three page form may be viewed in "Microsoft Word" and filled in and printed, or the form may be printed and the information written on the hard copy form. Use a dark pen and ensure that it is legible. If written entries exceed the space allotted, then use additional lines or sheets.

2. Complete one set of forms for each crop grown.

3. Block 1: Enter the name of the crop grown.

4. Block 2: Enter the season(s) in which the crop will be grown.

5. Block 3: List the specific pests under each category of pest: disease, arthropod, nematode, weed, and other pests. If the treatment will be the same or similar for several pests you may group them together as one pest group. Complete blocks 4 through 7 for each of the pests or pest groups.

    a. Block 4: List the method(s) that are used by the farmer or pest control advisor to detect the pest. This may include visual observation, trapping, netting, etc. Write the word "Preventive" in this block if the treatment method is to prevent the pest from occurring.
    b. Block 5: Enter the threshold level at which control will be initiated. If the treatment is preventive, then write "0." If a single observation of an organism or disease symptom is needed to initiate control, then write "1." For all others indicate the number of pests or infected/affected plants per surface unit (i.e. acre, hectare, sq foot).
    c. Block 6: List the non-chemical methods to control or prevent the pests. If fertilizers are used, then enter "Fertilizer" in this block and do not include the name of chemical fertilizers in Block 7.
    d. Block 7: List the complete names and EPA registration numbers (as written on the product label) of the chemicals to be used.

1. CROP:				
2. GROWING SEASON(S):				
3. PEST PROBLEM	4. Detection method	5. Action Threshold	6. Non-chemical Control	7. Chemical Control (Product name and EPA Reg No.)
DISEASES				

1. CROP:				
2. GROWING SEASON(S):				
3. PEST PROBLEM	**4. Detection method**	**5. Action Threshold**	**6. Non-chemical Control**	**7. Chemical Control (Product name and EPA Reg No.)**
ARTHROPODS (Insects and mites)				

1. CROP:				
2. GROWING SEASON(S):				
3. PEST PROBLEM	4. Detection method	5. Action Threshold	6. Non-chemical Control	7. Chemical Control (Product name and EPA Reg No.)
NEMATODES				
WEEDS				
OTHER				

1. CROP:				
2. GROWING SEASON(S):				
3. PEST PROBLEM	**4. Detection method**	**5. Action Threshold**	**6. Non-chemical Control**	**7. Chemical Control (Product name and EPA Reg No.)**

CROP DUSTER REQUEST FORM

NOTE: ALL INFORMATION MUST BE COMPLETE PRIOR TO FINAL APPROVAL.

TIME/DATE:_____

NAME OF CALLER_____ FARMER_____

NAME OF DUSTER_____ TEL. NO._____

NO. OF PLANES_____ REGISTRATION NOS._____
_____
_____

START _____ STOP _____

WORKING AREA: RANGE _____ TOWNSHIP _____ SECTIONS _____

RANGE _____ TOWNSHIP _____ SECTIONS _____

RANGE _____ TOWNSHIP _____ SECTIONS _____

RANGE _____ TOWNSHIP _____ SECTIONS _____

TYPE OF INSECTICIDE _____

RADIO EQUIPPED? YES_____ WILL USE: 126.2 124.1 125.95 134.1
(CIRCLE ONE)

NO _____

CURRENT WEATHER _____

COORDINATION COMPLETED WITH _____ TOWER WATCH SUPERVISOR

ESSENTIAL INFORMATION PASSED TO DUSTER _____
_____
_____
_____
_____W/S_____

ACTION TAKEN: APPROVED DISAPPROVED
(CIRCLE ONE)

_____
INITIALS

California Department of
Pesticide Regulation

MODIFIED BAIT STATIONS FOR CONTROL OF THE CALIFORNIA GROUND SQUIRREL
IN ENDANGERED KANGAROO RAT HABITAT

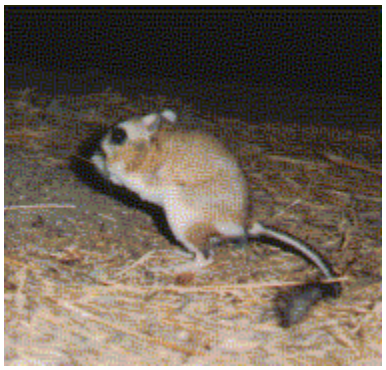

This study was undertaken in association with the California Department of Fish and Game and California Department of Food and Agriculture. Funding was provided by the Vertebrate Pest Control Research Advisory Committee (Bait surcharge funds).

Simple modifications to existing bait stations were found to exclude kangaroo rats while still allowing ground squirrels access to poison bait.

I. Inverted "T" design

45 degree elbows and additional pipe can be placed on each entrance of the traditional station such that the entrance to the station is 12 inches above ground level. Ground squirrels generally begin visiting these bait stations at the same time as they would visit the traditional station (between 1 and 6 days). In the event that ground squirrels do not visit the modified station, the extensions should be removed, and the station pre-baited with clean (i.e., no poison) grain. Once the squirrels begin feeding from the station, the extensions can be replaced, poison grain added and the squirrels will continue to visit the station.

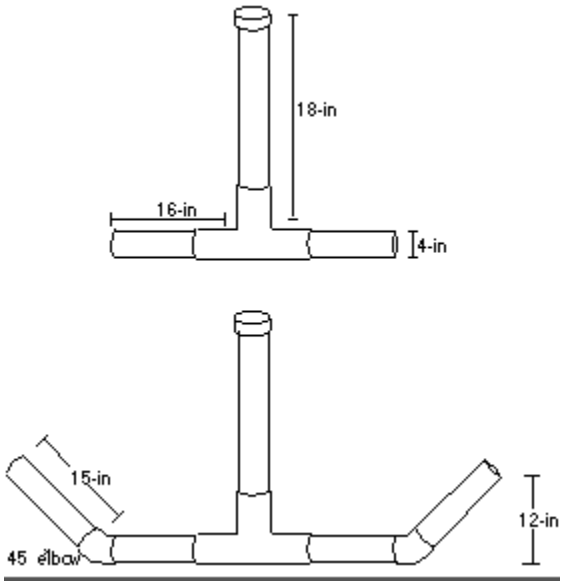

Traditional and modified inverted "T" bait stations

Specifications:

1. The entrances must be at least 12 inches above the ground

2. Vegetation should be cleared from around the entrances. Kangaroo rats will be able to climb into the stations if dense vegetation is present or if the stations are placed against a 1/2 inch (or finer) wire mesh fence. Keep entrances away from fence posts and large rocks that might be used by kangaroo rats to gain access.

3. Rain or sprinkler irrigators will result in water collecting in the bait stations. In locations or at times when this is likely, it may be necessary to further modify the bait station (e.g., by adding an additional horizontal extension; drilling a hole in the bottom of the station to drain water, etc.). It is important to remember that ground squirrels will not take moldy bait.

4. In kit fox range, the entrance to the station should be no greater than 3-inches in diameter. This can be achieved by fitting a 4-inch to 3-inch reducer or 1/2 an endcap.

II. Platform for other bait station types

Almost any type of bait box may be elevated on a 12-inch high platform. Any material may be used for building the platform but due to kangaroo rat behavior, it is important to adhere to the specifications.

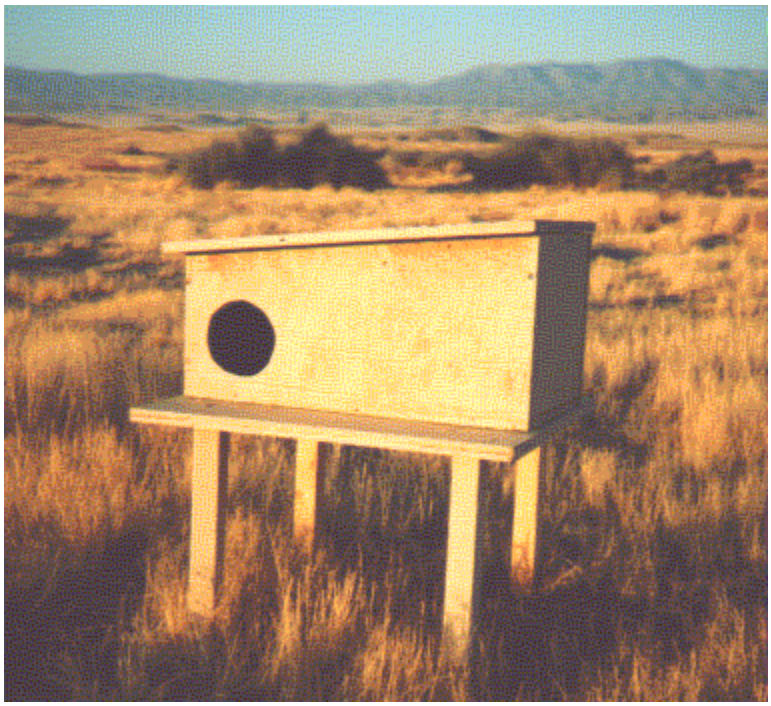

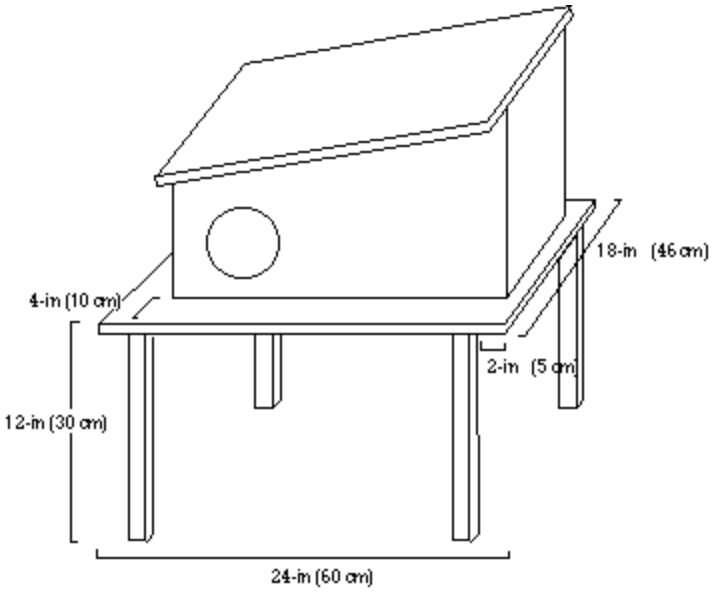

Ground squirrels generally begin visiting these bait stations at the same time as they would visit the traditional station (between 1 and 6 days). In the event that ground squirrels do not visit the modified station, the station should be placed at ground level and pre-baited with clean (i.e., no poison) grain. Once the squirrels begin feeding from the station, it can be elevated, poison grain added and the squirrels will continue to visit the station.

Specifications:

1. The platform should be 12-inches high.

2. The platform must not have a solid base. Kangaroo rats are able to jump or climb to heights of up to 24 inches if they're presented with a solid base. Even a platform top with a 3-inch overhang over a solid base is easily negotiated by kangaroo rats.

3. The legs of the platform should be inset at least 2-inches to stop kangaroo rats from climbing into the station. Ramps or wire mesh should not be added to improve accessibility by ground squirrels as kangaroo rats will learn to use these to climb into the bait station.

4. Vegetation should be cleared from around the base of the platforms. Kangaroo rats will be able to climb into the stations if dense vegetation is present or if the stations are placed against a 1/2 inch (or finer) wire mesh fence. Keep entrances away from fence posts and large rocks that might be used by kangaroo rats to gain access.

5. It may be necessary to add a lip to the top of the platform to stop grain spillage. Any grain spilled from bait stations should be picked-up daily.

6. In rangeland areas, bait stations should be firmly secured to the ground to avoid them being tipped over by livestock.

7. In kit fox range, the entrance to the station should be no greater than 3-inches in diameter.

If you have difficulty accessing any document on our website, contact cdprweb@cdpr.ca.gov

Conditions of Use | Privacy Policy
Copyright © 2009 State of California

Using Other Amendments

If amendments other than gypsum are to be used, the amount needed to supply an equivalent amount of calcium can be calculated using *Table 1* and *Equation 1* below:

$$\text{Amount of amendments} = \frac{100}{\%\ \text{purity}} \times \text{tons equivalent} \qquad (1)$$

Where the tons equivalent represents tons of the alternative amendment equal to 1.0 ton of 100% gypsum.

Table 1. Quantities of common amendments needed to supply equal amounts of calcium

Amendment alternative to gypsum	*Tons of alternative equal to 1.0 ton 100% gypsum*
Calcium chloride dihydrate ($CaCl_2 * 2H_2O$)	0.86
Sulfuric acid (100% acid, 33%S, 15.3 lbs/gal)	0.57
Sulfur (100% S)	0.19
Lime-sulfur (23.3% S, 10.6 lbs/gal)	0.82
Nitro-sul (40% S, 9.52 lbs/gal)	0.22
Urea-sulfuric acid* (55% acid, 18% S, 10% N, 12.80 lbs/gal)	0.45

*Assumes 1 mole NH^+_4 replace 2 mole Na^+

Fulton, Allen. 1999. "Amendments for Reclaiming Sodic and Saline/Sodic Soils" Agricultural Salinity and Drainage, pg 104.

Station: NAS Lemoore, California
Parcel #: 4A29
Contract #: N6247315RP00052

DEPARTMENT OF THE NAVY
BID FORM FOR AGRICULTURAL LEASE

---

1. LESSEE: _____ (print)

☐ Check box if small business concern. This is for informational purposes only.

2. RENT:		**Rent/Acre/Year**		**Annual Rent**	**Payment Cycle** (Circle One)
Parcel 4A29					
292.3 +/- farmable acres	x	$_____	=	$_____	Annually Semi-Annually Quarterly

3. BID DEPOSIT:

Enclose a Bid Deposit in the form of a certified check, cashier's check, or U.S. Postal Service Money Order, payable to the "Disbursing Officer – DFAS Cleveland" for twenty- five percent (25%) of the annual rental or $1,500.00, whichever is GREATER. The bidder should be named as the "remitter" on the bid deposit. CASH OR PERSONAL CHECKS ARE NOT ACCEPTED AND BIDS SUBMITTED WITH A BID DEPOSIT WITH A PERSONAL CHECK MAY BE REJECTED.

Amount of bid deposit submitted: $_____

4. ACKNOWLEDGMENTS:

A. By executing the Bid Form, Bidder warrants and represents to the Government that Bidder has read, understands, and accepts all of the terms and conditions of the Lease and its Exhibits, including the Soil and Water Conservation Plan.

B. By executing the Bid Form, Bidder acknowledges that rejecting a Lease or withdrawing a bid after acceptance of a bid by the Government constitutes a default, which may result in the Government determining the bidder non-responsible and not eligible to participate in any future Navy agricultural lease Invitations to Bid, including other proposed leases solicited in this Invitation to Bid.

C. By executing the Bid Form, Bidder acknowledges that the Government may determine any Bidder not responsible, if the Bidder (including any corporate officers, directors, shareholders, partners of partnership, or officers or members of business entity ("Principals")) submitting a bid is in breach or default of a material provision of an existing or prior Lease at the time of evaluation of Bids under this solicitation.

5. EXECUTION BY LESSEE:

LESSEE: _____
(print)

Names of all Corporate officers, directors, and shareholders, partners of partnership, or officers or members of other business entity submitting bid:

_____ _____ _____

_____ _____ _____

Tax Identification #: _____

Mailing Address: _____

FedEx Mailing Address: _____

Home Telephone: _____

Mobile Telephone: _____

24 Hour Emergency Telephone: _____

Alternate 24 Hour Emergency Name & Telephone _____

E-mail address: _____

Fax: _____

_____ _____
Signature of Lessee Date

_____ _____
Title of Lessee Witness

For Corporation LESSEE, certification by Secretary or Assistant Secretary of the Corporation:

I certify that the person who signed this LEASE on behalf of LESSEE was then the Officer indicated and this agreement was duly signed for and on behalf of said corporation by authority of its governing body and is within the scope of its corporate powers.

(Corporate Seal) _____
Signature

_____ _____
ITS Title