DEPOT MAINTENANCE

ASSEMBLY AND BALANCING

ROTOR AND STATOR ASSEMBLY, FRONT COMPRESSOR

EFFECTIVITY: ALL MODELS

Reference Material

Standard Maintenance Procedures . . . . . NAVAIR 02–1–517
Illustrated Parts Breakdown . . . . . NAVAIR 02B–10DAD–4
GMS 4000/5000 Series Operator Manual AG–J52–GM–OMM–100

Alphabetical Index

Subject **Page No.**

Annotate N1 Axiam Build on Assembly Service Record Card 34
Balancing – Static 6
Blades, Compressor (Stages One through Four) – Root Sealing 11
Blades, Compressor Rotor (Stages One through Three) – Installation 5
Blades, Compressor Rotor (Stages One through Three) – Set Up 4
Blades, Compressor Rotor (Stages Four through Five) – Installation 5
Blades, Compressor Rotor (Stages Four through Five) – Set Up 5
Blades, Compressor Rotor – Installation 4
Blades, Compressor Rotor – Installation, Alternate Procedure 6
Blades, Compressor Rotor First Stage – Installation, Alternate Procedure 6
Blades, Compressor Rotor (Stage Two through Four) – Installation, Alternate Procedure 7
Blades, Compressor Rotor Fifth Stage – Installation, Alternate Procedure 8
Balancing – Static, Alternate Procedure 8
Hub and Blades Assembly, Front Compressor Rotor Front (Stage One) – Static Balance (Flat Balance Check), Alternate Procedure 8
Disk and Blades Assembly, Front Compressor Rotor (Stages Two through Five) – Static Balance (Flat Balance) Check, Alternate Procedure 9
Coupling Lock, Turbine Shaft – Assembly 12
Introduction 4
Lock, Blade (Stages One through Four) – Installation 10
Materials Required 3
Pins, Retaining, Fifth Stage Blades – Flaring of Rivets 11
Record of Applicable Technical Directives 2
Rotor and Stator Assembly, Front Compressor 13
Rotor and Stator Assembly, Front Compressor – Assembly 13
Rotor and Stator Assembly, Front Compressor – Axiam, Build and Verification 25
Rotor and Stator Assembly, Front Compressor – Axiam, Measurement For Build 22
Rotor and Stator Assembly, Front Compressor – Dynamic Balancing 29
Rotor and Stator Assembly, Front Compressor – Recording Disk and Spacer Snap Fits 24
Support Equipment Required 2

Record of Applicable Technical Directives

Type Number	Date	Title and ECP No.	Date Incorp.	Remarks
–	–	None	–	–

Support Equipment Required

Type Design/ Part Number	Nomenclature	Figure No.
–	Torque wrench (0 to 600 pound–inches)	–
–	Torque wrench (1500 to 3000 pound–inches)	–
C–35871–1	Aft Retention Nut	–
C–35873–1	Forward Retention Nut	–
D–35872–1	Forward Slave Race	–
D–35887–1	Aft Slave Race	–
D–35888–1	Lift Adapter Assembly	–
D–35889–1	Forward End Cap	–
D–35890–1	Aft End Cap	–
E–35831–1	Frame Assembly	–
E–35849–1	Cart Assembly	–
E–35851–1	Lifting Beam Assembly	–
E–35881–1	Slave Race Puller Assembly	–
GMS–4060–LPC–001	Front Compressor Axiam Build Fixture	–
GMS–4060–LPC–002	Front Compressor Axiam Build Fixture	–
LPC–001 No. 2	Adapter, 2nd Stage	–
LPC–001 No. 3	Adapter, 3rd Stage	–
LPC–001 No. 4	Adapter, 4th Stage	–
LPC–001 No. 5	Adapter, 5th Stage	–
P10036	Wrench	–
P–9993–D	Balance bearing spacer	–
P–10089 (96547)	Coupler Lock Tool	–
PWA 6580	Sling	–
PWA 8170–1	Housing (2 required)	–
PWA 9615	Guide (2 required)	–
PWA 9964	Nut	10
PWA 9965	Wrench	–
PWA 14014	Retainer	16
PWA 14094	Spacer	7
PWA 14095	Drift	
PWA 14096	Puller	

Support Equipment Required (continued)

Type Design/ Part Number	Nomenclature	Figure No.
PWA 14097	Wrench	
PWA 14099	Eye	
PWA 14191	Puller	
PWA 14268	Gage	14
PWA 14272	Pin	
PWA 14370	Jaw	
PWA 14371	Liner	
PWA 14373	Anvil	
PWA 14397	Holder	
PWA 14678	Adapter	
PWA 14692	Weight, calibration, static balance	
PWA 14744	Riveter	
PWA 14886	Stand	
PWA 17025	Adapter (for Tinius Olsen machine without SAE)	
PWA 21350–16	Bearing	7
PWA 22634	Machine	
PWA 30463	Anvil (alternate to machine)	
PWA 34032	Adapter	
PWA 34033	Anvil	
PWA 34034	Punch	
PWA 34105	Fixture	
PWA 34164	Pliers – prebend	
PWA 34165	Pliers – final bend	
PWA 34647	Adapter	
PWA 34651	Anvil	
PWA 34654	Peen	
PWA 38370	Riveting machine	
PWA 38374	Pad	
PWA 38375	Holder	

Materials Required

Consumables

Specification/Identification	Nomenclature
Dow Corning 30121	Sealant, silicone
Dow Corning RTV 734	Sealant, silicone
Lubriplate No. 130A	Grease, extreme pressure

Materials Required (continued)

Consumables

Specification/Identification	Nomenclature
Micro Supreme (purple)	Dye, layout
MIL–PRF–23699	Oil, Lubricating
MS9226–04	Lockwire
Scotch No. 200 or 236 (or equivalent)	Tape, masking
TT–I–735	Alcohol, Isopropyl

Expendables

Part Number	Nomenclature	Quantity
MS9276–11	Key washer	24
355952	Pin, retaining	56
355953	Rivet	56
355954	Bushing	56
377995	Lock, blade	186
385492	Key washer	23
541150	Counterweight	AR
541152	Rivet	AR
541153	Counterweight	AR
541154	Counterweight	AR

1. INTRODUCTION.

a. This work package (WP) contains instructions for assembling and balancing a fully repaired front compressor rotor and stator assembly. Highlights of these instructions are as follows:

- Blades are installed in front hub and 2nd, 3rd, 4th and 5th stage disks.
- Each stage is static balanced.
- Blades are secured to front hub and disks.
- Turbine shaft coupling is installed.
- Rotor and stator are assembled using axiam or alternate build procedures.
- Rotor and stator assembly build is verified by axiam.
- Rotor and stator assembly is dynamically balanced.

b. Before assembling the front compressor rotor and stator, be sure that the correct parts are being used. Refer to NAVAIR 02B–10DAD–4 for correct parts listing.

2. BLADES, COMPRESSOR ROTOR – INSTALLATION.

3. BLADES, COMPRESSOR ROTOR (STAGES ONE THROUGH THREE) – SET UP.

a. Power on components of moment/mass weighing blade distribution system.

NOTE

Power on all components of moment/mass weighing blade distribution system. Allow to warm up for 15 minutes prior to use.

b. Prepare blade distribution system and select “Blade Set Type” to correspond with compressor stage.

c. Prepare moment weighing per manufacturer's instructions.

d. Zero out moment–weight or mass weighing scale and check for accuracy.

4. BLADES, COMPRESSOR ROTOR (STAGES ONE THROUGH THREE) – INSTALLATION.

a. Weigh blade set using moment weight adapter attached to blade distribution system. Number blades as they are measured using blue or black mark–a–lot marker.

b. Install PWA 14678 static balance adapter in balance machine.

c. Install the four locating plugs into the adapter plate.

d. Index the plug dials to engage snap diameter of hub.

e. Tighten the locating plugs.

f. Install hub so that hold down plugs pass through tie rod holes.

g. Engage snap diameter of hub with the locating plugs. Tap hub until firmly seated.

h. Install capscrews and washers in the two hold down plugs to secure hub to adapter. Torque capscrews to 20 – 30 pound inches.

i. Check unbalance of hub as follows:

(1) Set balance machine for Tooling Compensation.

(2) Rotate disk at 900 rpm minimum and take a reading.

(3) Remove disk from PWA 14678 adapter plate and reinstall 180° from original location.

(4) Rotate disk at 900 rpm minimum and check unbalance reading.

j. Mark location of No. 1 slot on front side of compressor front hub/disks with layout dye, Micro Supreme (purple), corresponding with the 0 degree location on the balance machine.

k. Enter hub/disk unbalance reading into blade distribution system under bare disk data.

l. Optimize blade orientation per blade distribution system manual.

m. Remove disk from balance machine.

n. Partially insert blades into hub in a counter–clockwise direction according to blade number and disk position according to plan from blade distribution system.

NOTE

When installing blades, insert all of them part way into disk slots before seating. Mid–span shrouds will prevent blades from seating if all are not started first.

o. Seat blades by tapping them at roots with a fiber mallet.

p. Blade locks will be installed after static balancing.

5. BLADES, COMPRESSOR ROTOR (STAGES FOUR THROUGH FIVE) – SET UP.

a. Power on components of blade distribution system.

NOTE

Power on all components of moment/mass weighing blade distribution system. Allow to warm up for 15 minutes prior to use.

b. Prepare blade distribution system and select "Blade Set Type" to correspond with compressor stage.

6. BLADES, COMPRESSOR ROTOR (STAGES FOUR THROUGH FIVE) – INSTALLATION.

a. Weigh blade set using pan weighing scale attached to blade distribution system. Number blades as they are measured using a blue or black mark–a–lot marker.

b. Install PWA 14678 static balance adapter in balance machine.

c. Install the four locating plugs into the adapter plate.

d. Index the plug dials to engage snap diameter of hub.

e. Tighten the locating plugs.

f. Engage snap diameter of disk with the locating plugs. Tap hub until firmly seated.

g. Install capscrews and washers in the two hold down plugs to secure assembly to adapter. Torque capscrews to 20 – 30 pound inches.

h. Check unbalance of hub as follows:

(1) Set balance machine up for Tooling Compensation.

(2) Rotate disk at 900 rpm minimum and take a reading.

(3) Remove disk from PWA 14678 adapter plate and reinstall 180° from original location.

(4) Rotate disk at 900 rpm minimum and check unbalance reading.

i. Mark location of No. 1 slot on front side of compressor front hub with layout dye, Micro Supreme (purple), corresponding with the 0 degree location on the balance machine.

j. Enter hub unbalance reading into blade distribution system under bare disk data.

NOTE

When installing blades, insert all of them part way into disk slots before seating. Mid–span shrouds will prevent blades from seating if all are not started first.

k. Optimize blade orientation per blade distribution system manual.

l. Remove disk from balance machine and place on bench, front side up.

m. Partially insert blades into hub in a counter–clockwise direction according to blade number and disk position according to plan from blade distribution system.

NOTE

Mid–span shrouds will prevent blades from seating if all are not started first. Stage 4 blades do not have mid–span shrouds. These blades can be seated one at a time.

n. Seat blades by tapping them at roots with a fiber mallet.

o. Blade locks will be installed after static balancing.

7. BALANCING – STATIC.

a. Re–install hub/disk on balance machine.

b. Rotate disk at 900 rpm minimum and check unbalance reading.

c. If unbalance is more than 0.20 ounce–inch, enter the unbalance data into the blade distribution system and optimize. Continue balancing by repositioning blades.

d. After unbalance has been corrected to less than 0.20 ounce–inch, (STAGE ONE: 1.00 ounce–inch with blade locks installed and RTV applied), mark heavy point with layout dye, Micro Supreme (purple).

e. Remove assembly from balance machine.

NOTE

The following is an alternate procedure for installing compressor rotor blades.

8. BLADES, COMPRESSOR ROTOR – INSTALLATION, ALTERNATE PROCEDURE.

a. BLADES, COMPRESSOR ROTOR FIRST STAGE – INSTALLATION, ALTERNATE PROCEDURE. (Figure 1)

(1) Arrange 1st stage blades on bench in order of heaviest to lightest.

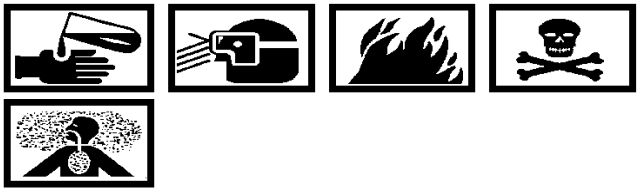

Layout Dye, Micro–Supreme
No. 451 Purple

(2) Mark location of No. 1 blade slot on front side of compressor front hub with layout dye, Micro Supreme (purple). This slot is located between the two spherical indents on rear face.

(3) Place disk on bench, front side up.

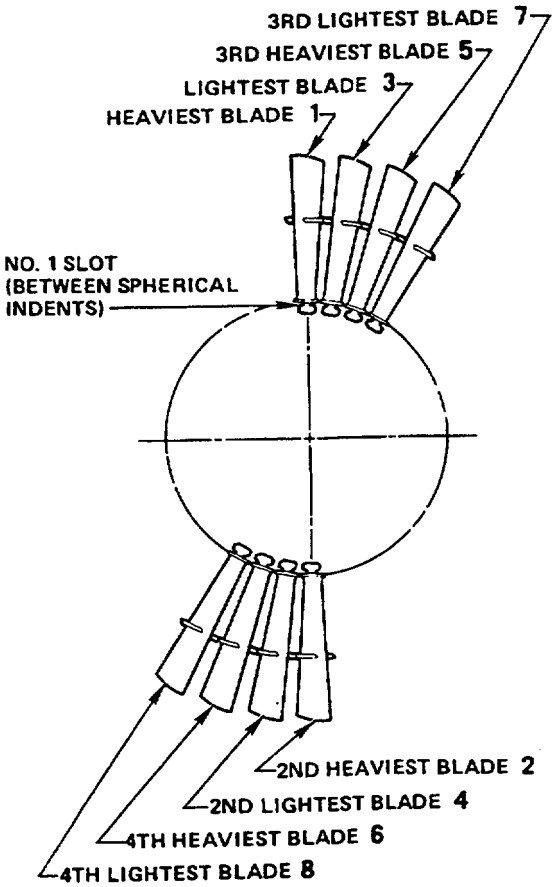

Figure 1. Blades, Front Compressor First Stage – Installation Pattern

NOTE

When installing blades, insert all of them part way into disk slots before seating. Mid–span shrouds will prevent blades from seating if all are not started first.

(4) Insert heaviest blade part way into No. 1 slot (Figure 1).

(5) Insert next heaviest blade part way into the slot opposite (180 degrees) from the No. 1 slot.

(6) Insert lightest blade part way into the next slot clockwise from the heaviest blade (No. 1 slot).

(7) Insert next lightest blade into the slot opposite (180 degrees) from the slot where lightest blade was installed.

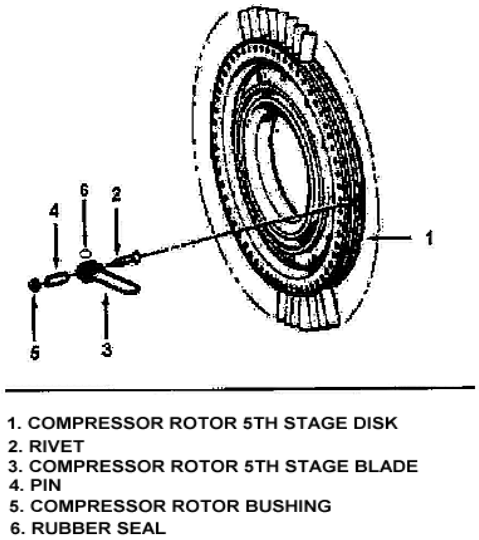

Figure 2. Blades, Compressor Rotor Fifth Stage – Installation

(8) Partially insert remaining blades clockwise around the hub. Continue in the same pattern established in steps (4) through (7), alternating between heaviest and lightest pairs of blades.

(9) Seat blades by tapping them at roots with a fiber mallet.

NOTE

Blade locks will be installed after static balancing.

b. BLADES, COMPRESSOR ROTOR (STAGES TWO THROUGH FOUR) – INSTALLATION, ALTERNATE PROCEDURE.

(1) Place disk on bench, front side up.

NOTE

- Stages 2 and 3 blades have mid–span shrouds. When assembling these stages, insert all blades part way into disk slots before attempting to seat

them. Mid–span shrouds will prevent blades from seating if all are not started first.

- Stage 4 blades do not have mid–span shrouds. These blades can be seated one at a time.

(2) Install all blades part way into disk slots.

(3) Seat blades by tapping them at roots with a fiber mallet.

NOTE

Blade locks will be installed after static balancing.

c. BLADES, COMPRESSOR ROTOR FIFTH STAGE – INSTALLATION, ALTERNATE PROCEDURE. (Figure 2)

(1) Place 5th stage disk (1, Figure 2) on bench, rear face down.

(2) Assemble 1 blade (3) into disk (1) with concave side up.

(3) Install seal (6, figure 2) flat side out, to center rail of disk behind left side of blade under platform seal.

(4) Secure blade with nylon pin P/N 10303–C inserted through holes in blade and disk.

(5) Going in a clockwise direction, install remaining seals and blades to disk and secure with nylon pins P/N 10303–C per previous instructions.

NOTE

When installing blades, platform seal of blade must be between saddle seal (6) and platform of next installed blade.

NOTE

To install the last blade and seal, it will be necessary to remove the nylon pin P/N P–10303–C from the adjacent blade (on left side) and move blades slightly outboard enough to facilitate saddle seal installation under both blade platforms.

(6) Install pins (4, Figure 2) as follows:

(a) Using nylon flat stock, push nylon pin P/N P–10303–C flush with top of disk face.

(b) While holding blades firmly in place against seal, install pin (4, Figure 2) down through holes in disk and blade while pushing nylon pin P/N P10303–C free of disk.

CAUTION

Protect hands from sharp edges of blades when applying pressure on blades to install pins.

d. BALANCING – STATIC, ALTERNATE PROCEDURE.

e. HUB AND BLADES ASSEMBLY, FRONT COMPRESSOR ROTOR FRONT (STAGE ONE) – STATIC BALANCE (FLAT BALANCE CHECK), ALTERNATE PROCEDURE.

(1) Install PWA 14678 static balance adapter in balance machine.

(2) Install the four locating plugs into the adapter plate.

(3) Install the two hold–down plugs into the adapter plate.

(4) Index the plug dials at 10.

(5) Tighten the locating plugs.

(6) Install hub and blades assembly so that hold down plugs pass through tie rod holes.

(7) Engage snap diameter of hub with the locating plugs. Tap hub until firmly seated.

(8) Install capscrews and washers in the two hold down plugs to secure hub to adapter.

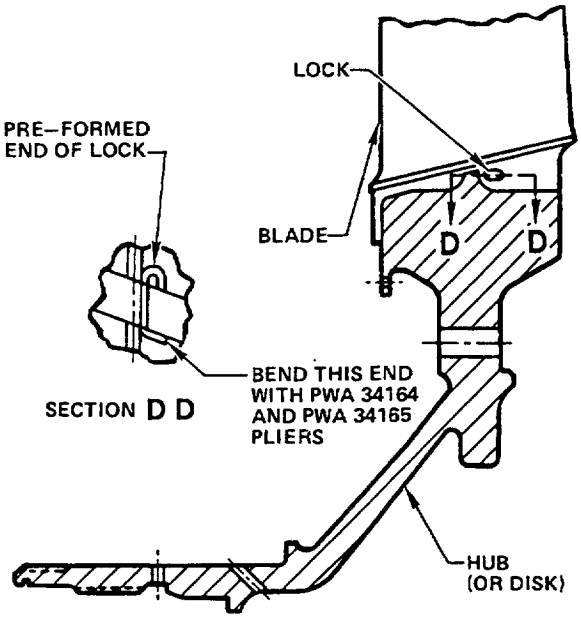

Figure 3. Lock, Blade (Stages One through Four) – Installation

(9) Calibrate balance machine per manufacturers instructions, using PWA 14692 weight.

(10) Check unbalance of hub and blade assembly as follows:

(a) Rotate disk and blade assembly at 900 rpm minimum and check unbalance reading.

(b) If unbalance reading is more than 0.20 ounce–inch, (1.00 ounce–inch with blade locks installed and RTV applied), reposition blades as indicated by balance machine.

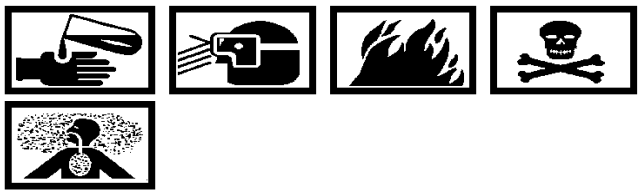

Layout Dye, Micro–Supreme No. 451 Purple **57**

(c) After unbalance has been corrected to less than 0.20 ounce–inch, (1.00 ounce–inch with blade locks installed and RTV applied), mark heavy point with layout dye, Micro Supreme (purple). (QA)

(11) Remove assembly from balance machine.

f. DISK AND BLADES ASSEMBLY, FRONT COMPRESSOR ROTOR (STAGES TWO THROUGH FIVE) – STATIC BALANCE (FLAT BALANCE) CHECK, ALTERNATE PROCEDURE.

(1) Install PWA 14678 static balance adapter in balance machine.

(2) Install the four locating plugs in the adapter plate. The two detail hold–down plugs are not used in this procedure.

(3) Index the plug dials for the stage being balanced as follows:

Stage	Dial Setting
2	10
3	10
4	3
5	2.5

(4) Tighten the locating plugs.

(5) Install disk and blades assembly so that snap diameter mates with locating plugs. Tap disk at each plug until firmly seated.

(6) Install PWA 14397 holder to secure the disk on hold–down plugs. Secure with bolt and washer.

(7) Calibrate balance machine per manufacturers instructions, using PWA 14692 weight.

(8) Check unbalance of disk and blade assembly as follows:

(a) Rotate disk and blade assembly at 900 rpm minimum and check unbalance reading.

(b) If unbalance is more than 0.20 ounce–inch, reposition blades as indicated by balance machine.

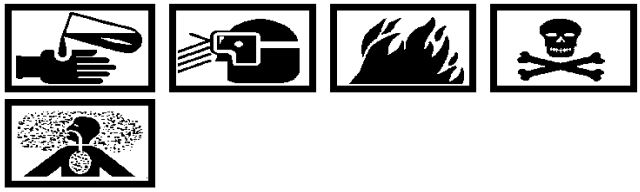

Layout Dye, Micro–Supreme No. 451 Purple **57**

(c) After unbalance has been corrected to less than 0.20 ounce–inch, mark heavy point with layout dye. (QA)

(9) Remove assembly from balance machine.

9. LOCK, BLADE (STAGES ONE THROUGH FOUR) – INSTALLATION. (Figure 3)

a. Place assembled rotor stage on bench, rear face up.

b. Install blade locks through holes in blade roots so that preformed end is on right side of blade (Figure 3).

c. Initial bend blade locks as follows:

Lubriplate No. 130A **72**

(1) Put a small amount of 130A (or equivalent) Lubriplate on forming jaw of PWA 34164 pliers.

(2) While holding prebent end of lock firmly against blade root, gradually squeeze pliers so that forming jaw engages chamfer on prebent end of lock.

(3) Continue squeezing pliers to form the initial bend.

(4) Apply initial bend to all blade locks.

d. Finish bend blade locks as follows:

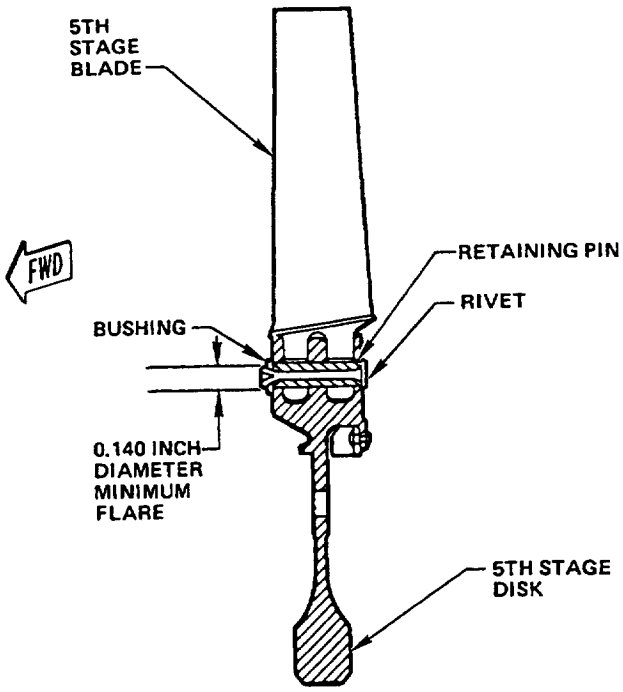

Figure 4. Pins, Retaining, Fifth Stage Blades – Flaring of Rivets

Lubriplate No. 130A **72**

(1) Put a small amount of 130A (or equivalent) Lubriplate on forming jaw of PWA 34165 pliers.

(2) While holding prebent end of lock firmly against blade root, gradually squeeze pliers so that forming jaw engages initial bend accomplished in step c.

(3) Continue squeezing pliers to fully bend the lock.

(4) Inspect the lock for cracks and signs of work hardening. Replace lock if necessary.

(5) Apply finish bend to all blade locks. (QA)

10. PINS, RETAINING, FIFTH STAGE BLADES – FLARING OF RIVETS. (Figure 4)

a. Rotor assembly has been previously assembled with rivets and retaining pins held in place with tape.

NOTE

Rivets may be set by either of the following two methods. Rivets may also be set manually using PWA 14373 and PWA 30463 anvils.

b. Prepare to set rivets using PWA 22634 rivet setting machine as follows:

(1) Install PWA 34032 adapter plate in PWA 22634 rivet setting machine.

(2) Mount 5th stage disk and blades assembly in PWA 22634 machine.

(3) Remove masking tape that was used to secure rivets and retaining pins.

(4) Engage PWA 34033 flat anvil with flat head of rivet.

(5) Align PWA 34034 punch with rivet hole. Carefully engage punch with rivet.

c. Prepare to set rivets using PWA 38370 orbital riveting machine.

(1) Mount PWA 38375 holder to traverse piston on PWA 38370 riveting machine and secure with four screws.

(2) Insert PWA 38374 pad into holder.

(3) Mount PWA 34647 adapter to vertical cross slide assembly of riveting machine using four screws.

(4) Install PWA 34654 peen into peen holder of the orbital drive motor on the riveting machine. This tool will be used to form the flare portion of the rivet.

(5) Mount PWA 34647 disk adapter to vertical cross slide assembly of riveting machine using four screws.

(6) Install compressor disk to adapter, locating alignment pins through any tie bolt holes. Secure disk to adapter using cap screws provided.

(7) Install PWA 34651 anvil to orbital rivet machine vertical and cross slide assembly. This tool will back up the formed head of the rivet during flaring operation.

(8) Remove masking tape that was used to secure rivets and retaining pin.

(9) Install bushings onto forward end of rivets.

d. Flare rivets as follows:

(1) With flaring tooling engaged with rivet, flare rivet to 0.140 inch minimum diameter (Figure 4).

(2) Inspect rivet for cracks and full flare.

(3) Flare all remaining rivets. (QA)

11. BLADES, COMPRESSOR (STAGES ONE THROUGH FOUR) – ROOT SEALING. (Figure 5)

Alcohol, Isopropyl TT–I–735 **59**

a. Clean the blade root areas to be sealed with Isopropyl Alcohol (Figure 5). Be sure that all traces of lubricant on blade locks are removed.

b. Let the cleaned surfaces air dry for 10 to 15 minutes.

NOTE

Apply sealant only after static balance requirements have been met.

c. Apply RTV 734 sealant as follows:

Adhesive/Sealant/Filler RTV **27**

(1) Apply sealant (4) as shown in Figure 5 so that voids between blades and slots are filled.

(2) Leave a bead about 0.190 inch wide and 0.060 inch thick at disk rim rear face (1).

(3) No sealant is allowed on disk rim front face (2).

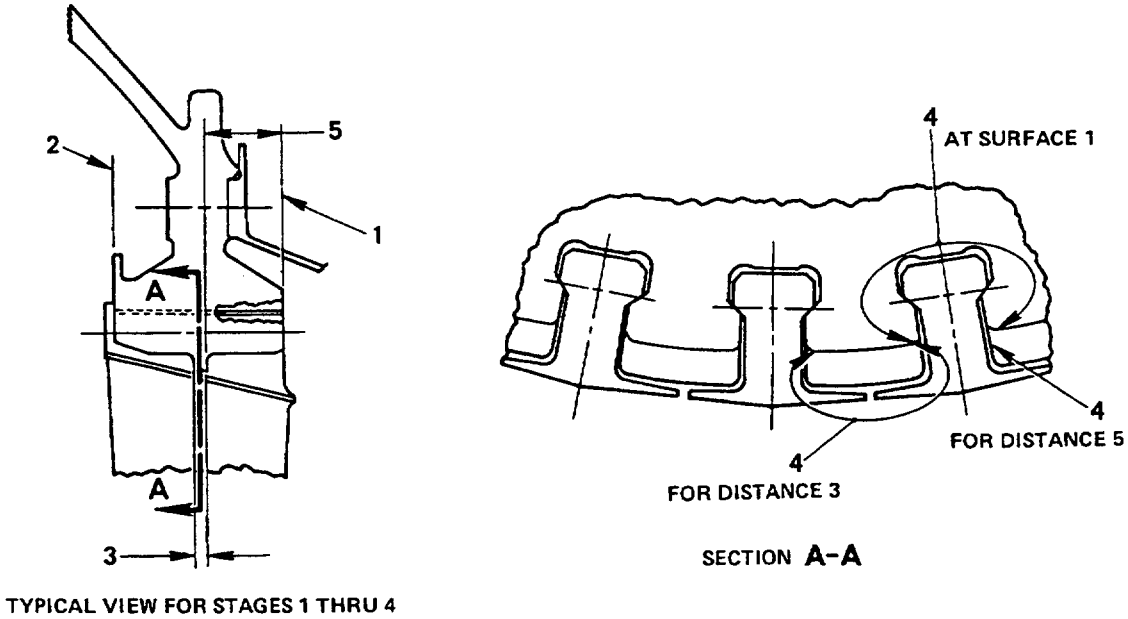

1. DISK REAR RIM FACE
2. DISK FRONT RIM FACE
3. DISK CENTER WEB
4. COAT RTV 734
5. APPLY COAT FOR THIS DISTANCE

Figure 5. Blades Compressor (Stages One through Four) – Root Sealing

d. Cure the sealant for eight hours minimum before dynamic balancing of front compressor. Sealant is fully cured after 24 hours (NAVAIR 02–1–517).

12. COUPLING LOCK, TURBINE SHAFT – ASSEMBLY. (Figure 6)

a. Install retaining ring (5, Figure 6) in groove inside coupling (6).

b. Install front spring (4) over lock (3).

c. Insert the lock and spring into front of coupling.

NOTE

Use of P–10089 will make the following assembly steps easier. Use P–10089–2 to depress the lock, and use P–10089–1 to hold the depressed assembly in place.

d. Depress and hold the lock, then install spring (7) from rear of coupling.

e. While holding lock depressed, install retaining ring (8) in rear groove to hold the rear spring and lock in the coupling.

f. Insert assembled coupling, threaded end first, into rear hub (9).

g. Install lockring (2) against front of coupling.

h. Install retaining ring (1) in groove in front hub to secure coupling in place.

1. RETAINING RING
2. TURBINE SHAFT COUPLING LOCKRING
3. TURBINE SHAFT COUPLING LOCK
4. FRONT SPRING
5. RETAINING RING
6. TURBINE SHAFT COUPLING
7. REAR SPRING
8. RETAINING RING
9. FRONT COMPRESSOR REAR HUB

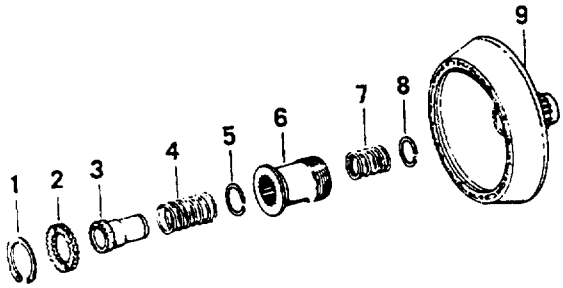

Figure 6. Coupling Lock, Turbine Shaft – Assembly

13. ROTOR AND STATOR ASSEMBLY, FRONT COMPRESSOR.

14. ROTOR AND STATOR ASSEMBLY, FRONT COMPRESSOR – Heavy Angle Process (Alternate Assembly). (Figures 7 through 12 and Table 1)

WARNING

Wear gloves when handling disk and blade assemblies. Blades have sharp edges which could cause injury.

a. Heat following parts to 400°F (204°C) maximum:

- Third–stage disk and blades (16, Figure 7).
- Fourth–stage disk and blades (24).
- Fifth–stage disk and blades (32).
- Rear hub.
- Second stage spacer.

b. Chill second–stage disk and blades

c. Install 2nd stage spacer (5, Figure 7) as follows:

(1) Find X–mark on 2nd stage spacer (Table 1).

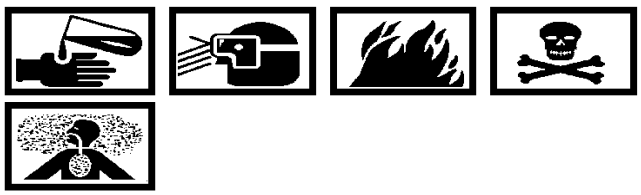

Layout Dye, Micro–Supreme No. 451 Purple **57**

(2) Make a dye mark across spacer in line with X–mark, with layout dye, Micro Supreme (purple).

NOTE

Second stage spacer must be heated before installation (Figure 8). This was accomplished in step a.

(3) Install two PWA 9615 aligning guides at front side of small bolt circle on spacer.

(4) Install 2nd–stage spacer on front hub, aligning dye–marks on hub and spacer. Tap to seat.

Oil, Lubricating MIL-PRF-23699 **1**

(5) Lubricate tie rods with MIL–PRF–23699 lubricating oil.

(6) Install tie rods with washers (2, Figure 7) and key washers (3) through front side of disk. Be sure that tabs of key washers are properly positioned (Figure 10).

CAUTION

To ensure parts are properly seated, each pair of tie rods must be tightened simultaneously. This requires two technicians.

(7) Torque two tie rods at a time, 180 degrees apart, 240 to 260 pound–inches.

(8) Torque next pair of tie rods 90 degrees from first pair.

(9) Continue torquing pairs of tie rods, moving 90 degrees from last pair, until all have been torqued.

(10) Allow parts to normalize at room temperature.

(11) Loosen all tie rods.

(12) Retorque tie rods using the procedure of steps (8) through (10).

(13) Bend tabs of key washers to secure tie rods. (NAVAIR 02–1–517, PWA 318) (QA)

NOTE

Refer to Figure 9 for illustration of completely assembled rotor and stator in frame assembly.

d. Install front half of balance fixture into PWA 14886 stand. Use PWA 14888 fixture.

e. Install front hub and blades (4, Figure 7), spacer (5) and 1st stage stator (7) into balance fixture as follows:

(1) Chill the balance bearing (installed on front hub) to allow installation at tight fit in balance fixture.

(2) Install front hub and blades into the balance fixture.

(3) Adjust jackscrew at bottom of PWA 14886 stand so it just contacts front hub. This will prevent damage to balance bearing during assembly procedure.

(4) Install 1st stage stator (7). Tap to seat in balance fixture.

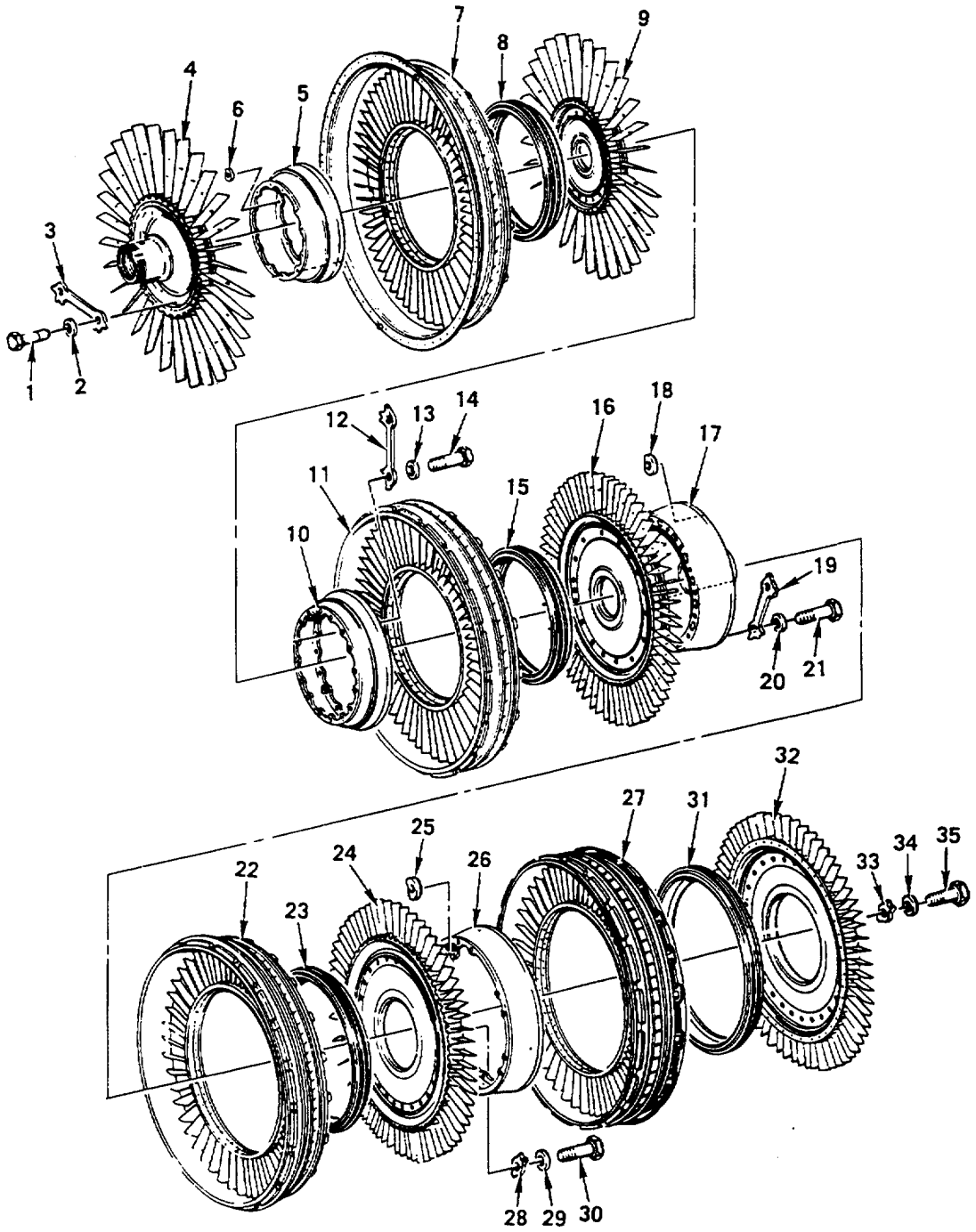

Figure 7. Rotor and Stator Assembly, Front Compressor – Exploded View (Sheet 1 of 2)

1. TIE ROD, FRONT COMPRESSOR
2. WASHER
3. WASHER KEY, P/N 385492
4. DISK, FRONT AND BLADES, 1ST–STAGE
5. SPACER ASSEMBLY, COMPRESSOR ROTOR
6. NUT, DEE, OFFSET
7. COMPRESSOR STATOR ASSEMBLY, 1ST–STAGE
8. SEAL, AIR, 1ST–STAGE, COMPRESSOR ROTOR
9. DISK AND BLADES, 2ND–STAGE, COMPRESSOR
10. SPACER ASSEMBLY, 3RD–STAGE COMPRESSOR ROTOR
11. COMPRESSOR STATOR ASSEMBLY, 2ND–STAGE
12. WASHER, KEY, P/N 385492
13. WASHER
14. TIE ROD, FRONT COMPRESSOR
15. SEAL, 2ND–STAGE, COMPRESSOR ROTOR
16. DISK AND BLADES, 3RD–STAGE, COMPRESSOR
17. HUB, REAR, FRONT COMPRESSOR ROTOR
18. NUT, DEE, OFFSET
19. WASHER, KEY, P/N 385492
20. WASHER
21. TIE ROD, FRONT COMPRESSOR
22. COMPRESSOR STATOR ASSEMBLY, 3RD–STAGE
23. SEAL, AIR, 3RD–STAGE COMPRESSOR ROTOR
24. DISK AND BLADES, COMPRESSOR, 4TH–STAGE
25. NUT, DEE, OFFSET
26. SPACER, 5TH–STAGE, COMPRESSOR ROTOR DISK
27. COMPRESSOR STATOR ASSEMBLY, 4TH–STAGE
28. WASHER
29. WASHER
30. TIE ROD, FRONT COMPRESSOR
31. SEAL, AIR, 4TH–STAGE COMPRESSOR
32. DISK AND BLADES, COMPRESSOR, 5TH–STAGE
33. WASHER
34. WASHER
35. TIE ROD, FRONT COMPRESSOR

Figure 7. Rotor and Stator Assembly, Front Compressor – Exploded View (Sheet 2)

Table 1. X–Mark Locations for Front Compressor Spacers and Airseals

Part	X–Mark Locations
2nd Stage Spacer	Front face of front bolt circle
2nd Stage Air Seal	OD between knife–edges
3rd Stage Spacer	On ID at front bolt circle
3rd Stage Air Seal	OD between knife–edges
4th Stage Air Seal	OD between knife–edges
5th Stage Spacer	On ID at front bolt circle
5th Stage Air Seal	OD between knife–edges

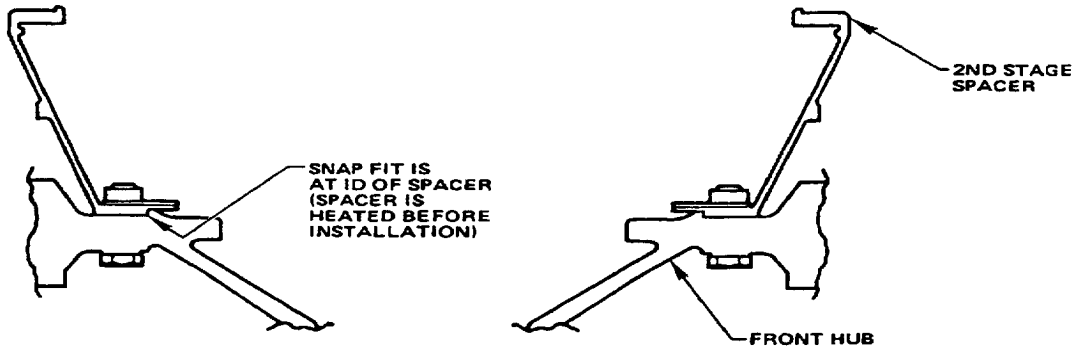

Figure 8. Spacer, Second–Stage Compressor Rotor

CAUTION

First stage airseal, P/N 2184120, shall be used in conjunction with 1st stage compressor stator assembly incorporating abradable seal lands.

f. Install 1st stage airseal (7) as follows:

(1) Find the X–mark on 1st stage air seal (Table 1).

Layout Dye, Micro–Supreme
No. 451 Purple 57

(2) Make a dye–mark across air seal in line with X–mark.

NOTE

Usually it is not necessary to heat 1st stage airseal for assembly. If any difficulty is encountered when installing the airseal, heat it in an oven.

(3) Install air seal on 2nd stage spacer, aligning dye–marks on air seal and spacer.

(4) Tap air seal to seat, then remove aligning guides.

g. Install 2nd stage disk and blades (9) as follows:

(1) Find the dye–mark which indicates heavy point on 2nd stage disk.

WARNING

Wear protective gloves when handling disk and blade assemblies. These assemblies are hot and blades have sharp edges which could cause injury.

(2) Install two PWA 9615 aligning guides, 180 degrees apart, through rear side of disk.

(3) Install 2nd stage disk and blades. Place the heavy point (dye–mark) 180 degrees from heavy point of 1st stage (Figure 11).

(4) Tap disk and blades to seat, then remove aligning guides.

h. Install 3rd stage spacer (10, Figure 7) as follows:

(1) Find the X–mark on 3rd stage spacer (Table 1).

Layout Dye, Micro–Supreme
No. 451 Purple 57

(2) Make a dye–mark across spacer in line with X–mark.

(3) Install two PWA 9615 aligning guides,180 degrees apart, in small bolt circle of 3rd stage spacer.

(4) Install spacer over snap diameter of 2nd stage disk. Align dye–mark on spacer with dye–mark on 2nd stage disk.

(5) Tap spacer to seat, then remove aligning guides.

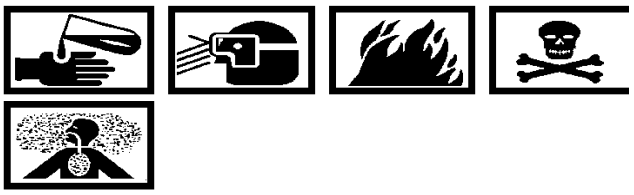

Oil, Lubricating MIL-PRF-23699 1

(6) Lubricate tie rods (14) with MIL–PRF–23699 lubricating oil.

(7) Install tie rods (heads up), with washers (13) and key washers (12).

(8) Install dee–nuts (6) on tie rod threads. Flat edges of nuts go against inside of spacer.

(9) Torque tie rods using the procedure specified in step c. (QA)

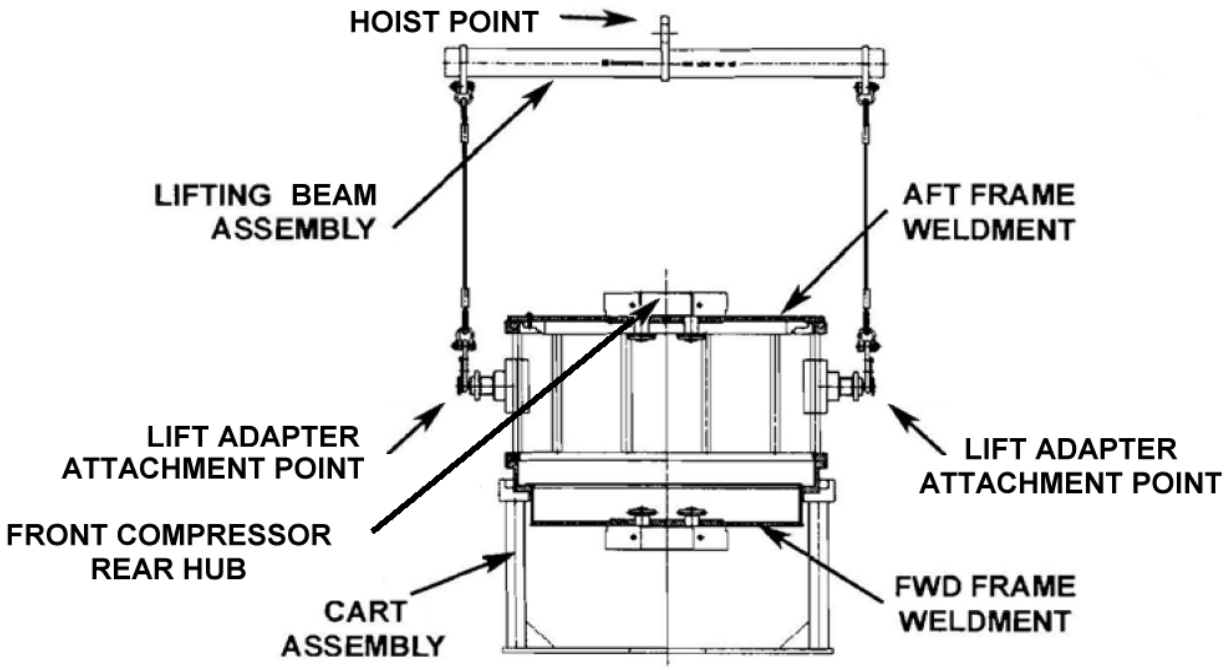

Figure 9. Cart Assembly and Frame Assembly

i. Install 2nd stage stator (11), aligning offset slot with offset tab on 1st stage stator shroud. Tap to seat.

CAUTION

P/N 2184121 second stage air seal shall be used in conjunction with 2nd stage compressor stator assembly incorporating abradable seal lands.

j. Install 2nd stage airseal (15) as follows:

(1) Find the X–mark on 2nd stage air seal (Table 1).

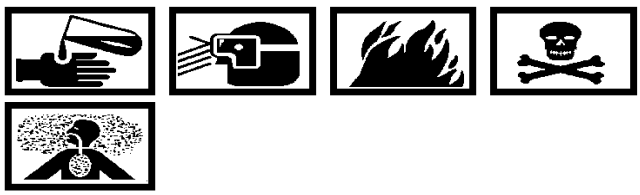

Layout Dye, Micro–Supreme
No. 451 Purple **57**

(2) Make a dye–mark across airseal in line with X–mark.

(3) Install air seal on spacer, aligning dye–mark on 3rd stage spacer (10) and air seal.

(4) Tap air seal to seat, do not remove aligning pins at this time.

k. Install 3rd stage disk and blade (16) and rear hub (17) as follows:

WARNING

Wear protective gloves when handling disk and blade assemblies. These assemblies are hot and blades have sharp edges which could cause injury.

NOTE

Install two PWA 14272 aligning pins 180 degrees apart in rear face of 3rd stage disk.

(1) Find the dye–mark which indicates the heavy point on 3rd stage disk.

(2) Install 3rd stage disk and blades (16). Place the heavy point 90 degrees clockwise (viewed from rear) from dye–mark on 1st stage (Figure 11).

(3) Tap 3rd stage disk and blades to seat.

(4) Find the dye–mark which indicated heavy point on rear hub.

(5) Remove PWA 14272 aligning pins from 3rd stage disk and install them in rear hub.

(6) Install rear hub on 3rd stage disk. Place the heavy point 270 degrees clockwise (viewed from rear) from dye–mark on 1st stage (Figure 11).

(7) Tap rear hub to seat, then remove PWA 14272 aligning pins.

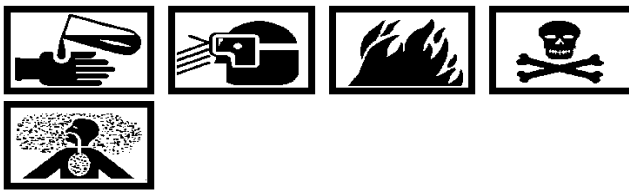

Oil, Lubricating MIL-PRF-23699 1

(8) Lubricate tie rods (21, Figure 7) with MIL–PRF–23699 lubricating oil.

(9) Install tie rods with washers (20) and key washers (19).

(10) Torque tie rods using procedure given in step c. (QA)

l. Install 3rd stage stator (22), aligning offset slot with offset tab on 2nd stage stator shroud. Tap to seat.

CAUTION

P/N 2184122 third stage airseal shall be used in conjunction with 4th stage compressor stator assembly incorporating abradable seal lands.

m. Install 3rd stage air seal as follows:

(1) Find X–marks on 3rd stage air seal (23). (Table 1)

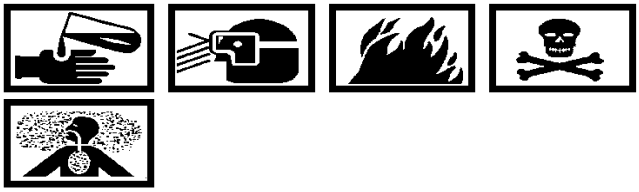

Layout Dye, Micro–Supreme No. 451 Purple 57

(2) Make a dye–mark across air seal in line with the X–mark.

(3) Install air seal on spacer flange of rear hub. Align ink marks on air seal and hub as close as possible.

(4) Tap air seal to seat, then remove aligning guides.

n. Install 4th stage disk and blades (24) as follows:

WARNING

Wear protective gloves when handling disk and blade assemblies. These assemblies are hot and blades have sharp edges which could cause injury.

(1) Find the dye–mark which indicated the heavy point on 4th stage disk.

(2) Install two PWA9615 aligning guides, 180 degrees apart, in 4th stage disk.

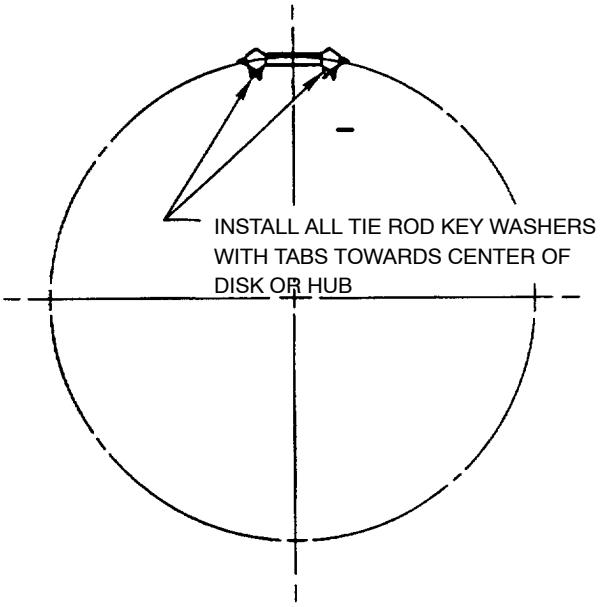

Figure 10. Key Washers (Stages One through Four) – Tab Positioning

(3) Install 4th stage disk and blades. Place the heavy point in line with heavy point (ink mark) on 1st stage.

(4) Tap disk and blades to seat, then remove aligning guides.

o. Install 5th stage spacer as follows:

(1) Find the X–mark on 5th stage spacer Figure 7 (26), (Table 1).

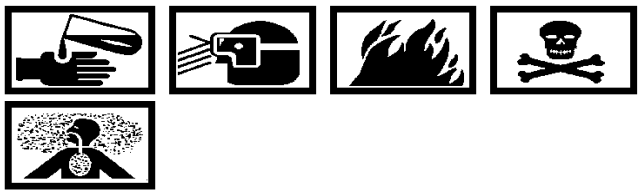

Layout Dye, Micro–Supreme No. 451 Purple **57**

(2) Make a dye–mark across spacer in line with X–mark.

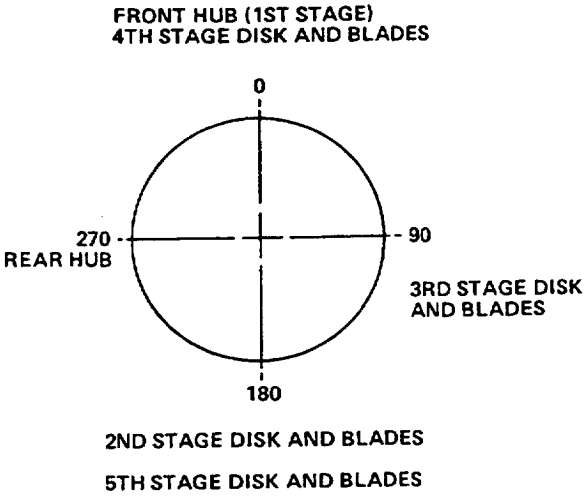

Figure 11. Disks and Hubs, Front Compressor Rotor – Installation Positions

(3) Install two PWA 9615 aligning guides, 180 degrees apart, in small bolt circle of 5th stage spacer.

(4) Install spacer in snap diameter of 4th stage disk. Align dye–mark on spacer with dye–mark on 4th stage disk.

(5) Tap spacer to seat, then remove tooling.

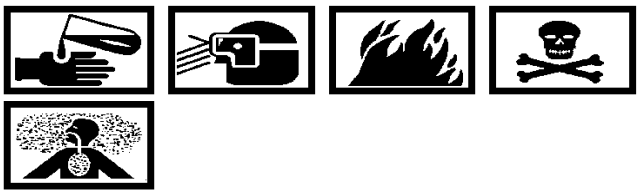

Oil, Lubricating MIL-PRF-23699 **1**

(6) Lubricate threads of 4th stage tie rods (30) with MIL–PRF–23699 lubricating oil.

(7) Install tie rods (heads up), with washers (29) and key washers (28).

(8) Install dee–nuts (18) on tie rod threads. Flat edge of nut goes against lands inside of spacer.

(9) Torque tie rods using procedure given in step c. (QA)

p. Install 4th stage stator (27), aligning offset slot with offset tab on 3rd stage stator shroud. Tap to seat.

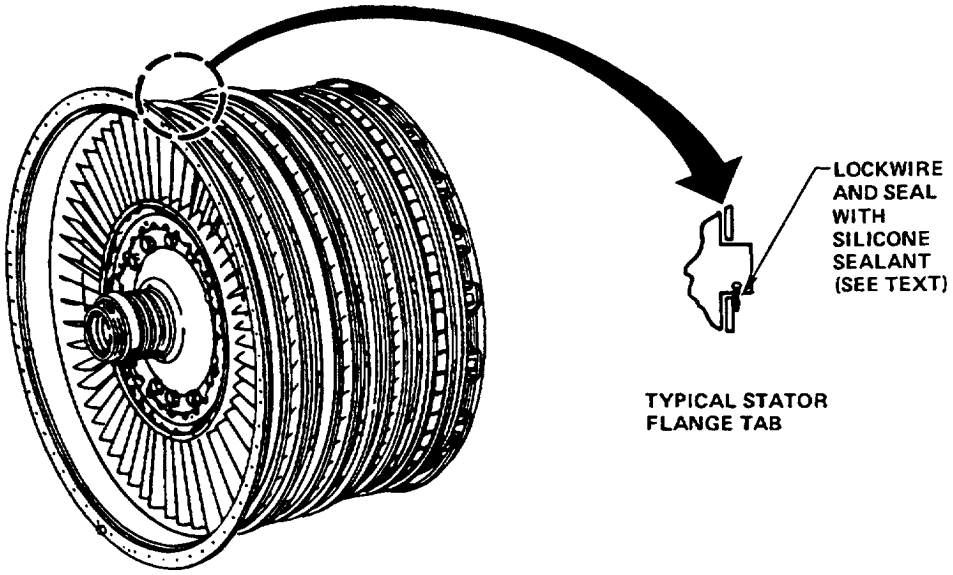

Figure 12. Flange, Front Compressor Rotor and Stator – Tab Lockwire and Sealing

CAUTION

P/N 2184123 fourth stage air seal shall be used in conjunction with 4th stage compressor stator assembly incorporating abradable seal lands.

q. Install 4th stage air seal (31) as follows:

(1) Find the X–mark on 4th stage air seal (Table 1).

Layout Dye, Micro–Supreme No. 451 Purple **57**

(2) Make a dye–mark across air seal in line with X–mark.

(3) Install air seal on spacer aligning ink mark on spacer and air seal.

(4) Tap air seal to seat, then remove tooling.

r. Install 5th stage disk and blades (32) as follows:

WARNING

Wear protective gloves when handling disk and blade assemblies. These assemblies are hot and blades have sharp edges which could cause injury.

(1) Find the dye–mark which indicates heavy point on 5th stage disk.

(2) Install two PWA 9615 aligning guides, 180 degrees apart in 5th stage disk.

(3) Install 5th stage disk and blades. Place the heavy point 180 degrees from heavy point (dye–mark) on 1st stage (Figure 11).

(4) Tap disk and blades to seat, then remove tooling.

Oil, Lubricating MIL-PRF-23699 **1**

(5) Lubricate threads of 5th stage tie rods (35, figure 7) MIL–PRF–23699 with lubricating oil.

(6) Install tie rods (heads up), with washers (34) and washers (33).

(7) Install dee–nuts (25) on tie rod threads. Flat edges of nuts go against lands inside of spacer.

(8) Torque tie rods and bend key washers using the procedure given in step c. (QA)

s. Secure stator flanges together as follows:

NOTE

There are nine tabs which must be lockwired (three for each stage).

(1) Secure 1st, 2nd and 3rd stage stators in place by lockwiring (MS9226–04 wire) tabs at stator flanges. Make the twisted length about 0.500 inches long and twist the wire ends along sides of each tab (Figure 12).

Adhesive/Sealant/Filler RTV 27

(2) Apply silicone sealant, Dow Corning 30121 over twisted ends of lockwire.

15. Rotor and Stator Assembly, Front Compressor – Axiam Measurement for Build.

a. **Interpretation Of Axiam Measurements** Use Axiam GMS 4060 to determine centerline and biplane deviation of the front compressor (LPC) components. Axiam measurements shall be interpreted to the 4th (x.xxxx) decimal place for limits that are expressed to the 4th decimal place. Measurements shall be interpreted to the 3rd (x.xxx) decimal place for limits that are expressed to the 3rd decimal place. No rounding is permitted unless otherwise noted.

b. Part Set–up Procedures

NOTE

The parts to be measured should be clean and free of debris prior to measurement. This is particularly critical for surfaces that the probes and chuck jaws contact.

(1) Using an approved marker, in accordance with NA 02–1–517, mark a blue line with the phi symbol (Φ) at the bolt hole closest to the part serial number, on all parts to be measured. This will be the zero reference point and notes the starting point of a measurement run.

(2) Before loading parts onto the table, rotate the table so that the angle indicator on the “Circular Setup Page” is at 0 degrees. Mount the part onto the table forward face down and rotate the part onthe chuck jaws so that the bolt hole with the phi mark (Φ) is lined up with the probes at zero, as displayed by the angle indicator.

NOTE

It is critical that parts are mounted onto the chuck jaws with the proper face orientation as defined in the part measurement program, (e.g. engine forward face upward – forward up or engine forward face downward – forward down). In general, part orientation is noted on the comment field of the part inspection program for each component of the Module.

CAUTION

Care should be taken when loading and unloading parts. Move the probes away from the part to avoid inadvertent bumping of or damage to the probes.

(3) Probes must be positioned according to the pre–defined part program. Probe position should be adjusted so that they are in the middle of the range on the probe range display.

(4) Part tilt affects part centering, and therefore, must be removed first. Datum Faces are typically used when removing tilt from the part.

(5) A Datum Diameter is used to center the part, even when there are two (2) diameters defined. If no Datum Diameter is defined, use any suitable diameter.

(6) The probes should be arranged into position according to the requirements of the Part Inspection Program.

c. Component Measurement:

(1) Mount the component to be measured onto the chuck jaws in the orientation specified by the inspection program. Forward down for LPC components.

(2) Rotate the table so that the GMS rotary table indicator on the GMS 4060 software "Setup" screen is at 0 degrees.

(3) Load the pre-defined part inspection program

(4) Enter Part No. and Serial No. for the specific set of parts (referred to as a Module) being measured and stacked by the Axiam System.

(5) Table 2 identifies the probe locations and centerline and biplane deviation limits for each part.

(6) Remove tilt and center the part.

(7) Click on the "Run" button at the bottom of the Setup page. Do not touch the table or the part while the part is being measured.

(8) Upon completion of the "Run" cycle, the Results page will be displayed. The Alternate Results page can be displayed by right clicking on the Results button at the top of the screen.

(9) Graphical interpretations of the results can be viewed by clicking on the "Graphics" button at the top of the screen.

(10) Repeat Steps (1) through (9) for all components.

Table 2. Probe Locations and Limits for Axiam Measurements

COMPONENT	FORWARD SIDE (Datums)	REAR SIDE	CL DEV LIMIT (inches)	BIPLANE DEV LIMIT (inches)
1ST STAGE DISK (Front Hub)	Bearing Journal Dia Bearing Journal Face	Snap Diameter Snap Face	0.0012	0.001
2ND STAGE DISK	Snap Diameter Snap Face	Snap Diameter Snap Face	0.0012	0.001
3RD STAGE DISK	Snap Diameter Snap Face	Snap Diameter Snap Face	0.0012	0.001
4TH STAGE DISK	Snap Diameter Snap Face	Snap Diameter Snap Face	0.0012	0.001
5TH STAGE DISK	Bore Diameter Snap Face	Rear Diameter Rear Face	0.0012	0.001
2ND STAGE SPACER	Snap Diameter Snap Face	Snap Diameter Snap Face	0.002	0.002
3RD STAGE SPACER	Snap Diameter Snap Face	Snap Diameter Snap Face	0.002	0.002
5TH STAGE SPACER	Snap Diameter Snap Face	Snap Diameter Snap Face	0.002	0.002
REAR HUB (Primary Stack)	Snap Diameter Snap Face	Shoulder Diameter Rear Face	0.0015	N/A
REAR HUB (Secondary Stack)	Snap Diameter Snap Face	Snap Diameter Snap Face	0.001	0.005

NOTE

No. 2 and No. 3 spacers require the use of a mounting pin installed into the anchor nuts in three equally spaced locations. This will aid in the mounting of the spacer into the chuck jaws.

NOTE

Two measurement runs of the rear hub are required, primary and secondary. For the primary run, use the part inspection program Rearhubprm.part and the setup in Table 2. For the secondary run, use the inspection program Rearhubsec.part and the setup in Table 2.

d. **Smart Stack™ of Primary Stack**

(1) Open the Smart Stack™ software program by right clicking on the "Options" button at the upper right side of the GMS 4060 Circular Setup Page. Left click on "Smart Stack LPC' to load the Smart Stack™ program.

(2) Right click on the Menu button at the bottom of the Smart Stack™ input page.

(3) Select "Load Program".

(4) Select J52LPC and load the primary Smart Stack™ program associated with the J52 low pressure compressor, LPCPRIM. The LPC Primary program stacks the compressor components from the front hub through the 3rd stage disk (rear hub). The LPC Secondary program (LPCSEC) stacks the compressor components from the 3rd stage through the 5th stage disk.

(5) Identify the primary stack module by inputting a Part No. and Serial No. The Stack program is now capable of receiving data from the measurement runs by one of the following methods

(a) Method A: Key in the data for each stage via the keyboard or;

(b) Method B:
• Click on Menu and then select Load Smart Stack Data.
• Open the list of directories in Smart Stack™ and click on "J52LPC".
• Select the matching Part No. from the list.
• Select the matching Serial No.
• Select the matching time from the list on the printout of the measurement run. This will load the selected data file into the chosen stage of the Smart Stack™ program.
• Repeat this process until all of the parts of this module are loaded into the program.
• After all of the components for the module are loaded into the Smart Stack™ Program click on the Calc. Button to run the calculation of the Stack and display the results.

(6) Review Smart Stack™ Results:

NOTE

After pressing the "Calc" Button, the Smart Stack™ results pages will be displayed. Be sure to print results before saving. Results will reset to zero after saving.

(a) Review the data. Note all large numbers and check tolerance limits. If a particular part is out of tolerance or the cumulative centerline deviation is greater than .001 inch, it may be necessary to re–machine or replace a problem part. If so, measure reconditioned or new parts and insert data into the stack plan.

(b) Save stack module by clicking on Menu and then No. 5, Save Stack Data. The file tree structure will save the module by Directory, Program, Part No. and Serial No.

e. **Smart Stack™ of Secondary Stack:**

NOTE

The secondary stack must be run after the primary stack because data from the primary Stack Plan Results page is used in the secondary stack input.

(1) Load the Secondary Stack data into the secondary stack program (LPCSEC).

(2) From the results of the primary stack, type in the biplane deviation value and angle into the input of STG3 in the secondary stack program.

(3) Click on the "Calc" button to calculate the secondary stack results.

(4) Print the secondary Smart Stack™ results.

16. Rotor and Stator Assembly, Front Compressor – Recording Disk and Spacer Snap Fits

a. Disk and spacer snap dimensions have been recorded on their respective work documents.

New parts may not have a recorded dimension. Snap dimensions for these parts must be determined for fit requirements. Record snap dimensions in appropriate locations in Table 3.

b. Subtract outside snap diameters from mating inside diameter snaps. Record this as the snap fit. Identify the result as negative or positive using the appropriate symbol (±).

17. Rotor and Stator Assembly, Front Compressor – Axiam Build and Verification (Figures 6 , 7 and 8)

a. Clean all mating surfaces by wiping with lint free cloth and isopropyl alcohol (Scotchbrite may be necessary for dirt build–up). Be sure all disk bolt hole surfaces and snap diameters, all spacer diameters and surfaces and the front compressor rotor rear hub top flange and outside diameter are cleaned in this manner.

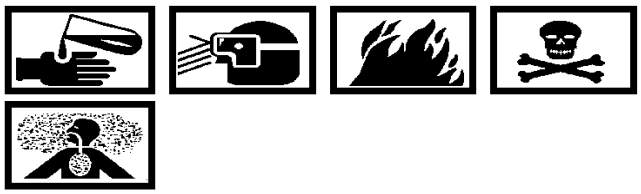

Alcohol, Isopropyl TT–I–735 59

b. Mark the Stack Line.

(1) View the Smart Stack™ results (primary and secondary) and identify each component on the results page. Note the associated bolt hole number

(2) Taking one component at a time, orientated forward down, count clock–wise from the reference (Φ) phi zero mark, the number of bolt holes for that part from the Smart Stack™ results page. Using an approved blue marker in accordance with NA 02–1–517, mark "SL" at this bolt hole to designate the stack line. Mark the stack line on all of the components.

c. Heat the 2nd stage spacer (Figure 8) at 390–410 °F for 4–5 minutes.

WARNING

Wear protective gloves when handling disk and blade assemblies and other heated components. These components are hot and blades have sharp edges which could cause injury.

d. Install 2nd stage spacer (5, Figure 7) onto 1st stage disk (4, Figure 7). Align stack line of 2nd stage spacer with stack line on 1st stage disk.

NOTE

Torque two tie rods at a time, 180 degrees apart. Torque the next pair of tie rods 90 degrees from the first pair. Torque pairs of tie rods, moving 45 degrees from the last pair. Moving 90 degrees from last pair, continue to torque pairs until all tie rods have been torqued.

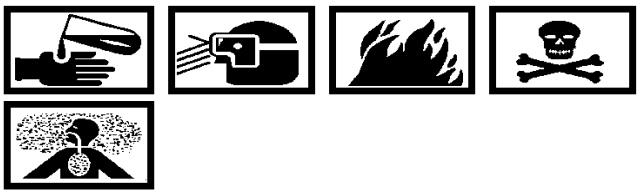

Oil, Lubricating MIL-PRF-23699 1

e. Lubricate tie rods with MIL–PRF–23699 engine oil. Insert tie rods, lock tabs and nuts. Torque tie rods to 240–260 pound inches. Bend locktabs to the sides of the tie rod heads.

f. Install the 1st stage disk and 2nd stage spacer assembly forward down, onto the Front Compressor Axiam build fixture (GMS–4060–LPC–001/2). Ensure that the standoffs are positioned between the disk lock washer areas.

g. Chill the bladed 2nd stage disk (9, Figure 7) for a minimum of 15 minutes.

h. Install 1st stage stator (7, Figure 7) over the 1st stage disk and 2nd stage spacer assembly. Ensure alignment pins on stator are properly inserted into alignment holes on Front Compressor Axiam build fixture.

i. Install 1st stage air seal (8, Figure 7) onto 2nd stage spacer.

j. Heat the 3rd stage spacer (10, Figure 7) at 390−410 °F for 4−5 minutes.

k. Install bladed 2nd stage disk (9, Figure 7). Use alignment pin to ensure tie rod holes are lined up with holes on 2nd stage spacer. Align disk stack line with spacer stack line.

Table 4. Snap Fit Worksheet

J52–P–408A/B W/O No._____Serial No._____Part No._____

Front Compressor Disk and Spacer/Airseal Snap Fit Worksheet

		Snap	Fit (ID–OD)	Limits	Date	Artisan
Hub 1	Rear OD					
Spacer 2	Front ID			.007T–.000T		See Note
	Rear ID					
Disk 2	Front OD			.004T–.000T		See Note
	Rear OD					
Spacer 3	Front ID			.006T–.002T		See Note
Airseal 3	Rear OD					
Disk 3	Front ID			.010T–.002T		See Note
	Rear OD					
Hub 2	Front ID			.005T–.001T		See Note
Airseal 4	Rear OD					
Disk 4	Front ID			.015T–.006T		See Note
	Rear ID					
Spacer 5	Front OD			.010T–.005T		See Note
Airseal 5	Rear OD					
Disk 5	Front ID			.016T–.007T		See Note

Airseal 3 OD	
Airseal 3 ID	
Airseal 4 OD	
Airseal 4 ID	
Airseal 5 OD	
Airseal 5 ID	
Spacer 3 Rear OD	
Hub 2 OD	
Spacer 5 Rear OD	

Sample Calculation

[Airseal OD – Airseal ID]
plus Spacer OD

_____
Airseal With Spacer OD

NOTE:

all measurements have been transcribed from original work documents for these calculations.

ARTISAN_____

l. Install 3rd stage spacer onto 2nd stage disk. Align spacer stack line with disk stack line.

m. Place build fixture top plate with LPC–001 No. 2 adapter over 3rd stage spacer. Engage the three compression rods and lock nuts with the fixture top plate and finger tighten.

n. Apply 200–220 psi to fixture and allow assembly temperatures to equalize (9–10 minutes with forced convection through assembly).

o. Ensure the turbine shaft coupling is installed in the No. 2 hub (rear hub). If installed, proceed to step p. If not, perform the following:

(1) Install retaining ring (5, Figure 6) in groove inside coupling (6).

(2) Install front spring (4) over lock (3).

(3) Insert the lock (3) and spring (4) into front of coupling (6).

(4) Depress and hold the lock (3). Then install spring (7) from rear of coupling.

(5) While holding lock depressed, install retaining ring (8) in rear groove to hold the rear spring and lock in the coupling.

(6) Insert assembled coupling, threaded end first, into rear hub (9).

(7) Install lock ring (2) against front of coupling.

(8) Install retaining ring (1) in groove in rear hub to secure the coupling in place.

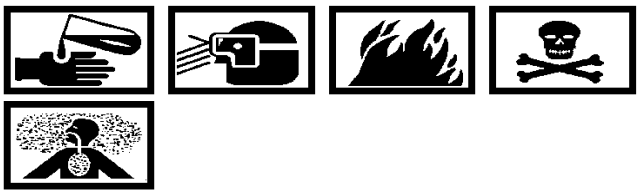

Oil, Lubricating MIL-PRF-23699 1

p. Lubricate tie rods with MIL–PRF–23699 lubricating oil. Install tie rods, nuts and locktabs and torque to 240–260 pound inches. Bend locktabs to the sides of the tie rod heads.

q. Release pressure from Axiam build fixture. Disengage compression rods and nuts. Remove top plate and adapter from fixture.

r. Install 2nd stage stator (11, Figure 7).

WARNING

Wear protective gloves when handling disk and blade assemblies and other heated components. These components are hot and blades have sharp edges which could cause injury.

s. Heat bladed 3rd stage disk (16, Figure 7) and No. 2 hub (rear hub) (17) at 390° – 410°F for 4–5 minutes.

t. Install 3rd stage air seal (23) to 3rd stage spacer (10).

u. Install 3rd stage disk (16) onto 3rd stage seal and spacer (10). Align disk stack line with spacer stack line.

v. Install No. 2 hub (rear hub) (17) onto 3rd stage disk (16). Align rear hub stack line with disk stack line.

w. Install build fixture top plate with LPC–001, No. 3 adapter over rear hub. Engage compression rods and nuts. Tighten nuts to finger tight.

x. Apply 200–220 psi to fixture and allow assembly temperatures to equalize (9–10 minutes with forced convection through assembly).

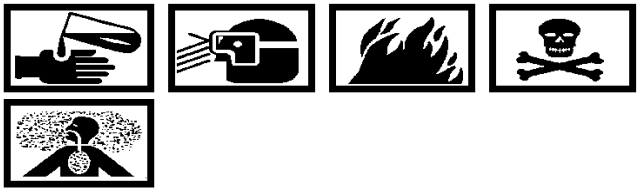

Oil, Lubricating MIL-PRF-23699 1

y. Lubricate tie rods (35) with MIL–PRF–23699 lubricrating oil. Install tie rods, nuts and locktabs and torque to 240–260 pound inches. Bend locktabs to the sides of the tie rod heads.

z. Release pressure from Axiam build fixture. Disengage compression rods and nuts. Remove top plate and adapter from fixture.

aa. Verify the build.

NOTE

This step is performed to ensure that a good build is attained before installation of stages four and five.

(1) Load the program, LPCFULRTR and enter Part No. and Serial No. for the module being measured.

(2) Mount the module onto the chuck jaws aft facing down.

(3) Align the (Φ) phi mark on the rear hub with table zero.

(4) Place datum probes on the front hub bearing journal diameter and bearing journal face. Place other probes on rear hub shoulder diameter and rear face as described by the program.

(5) Level and center the module to within +/- .001 inches.

(6) Run the program and print final results. Maintain printed results with rotor paperwork.

(7) Reject rotor if final verification centerline deviation exceeds 0.002 inches. This measurement shall be expressed to the 3rd decimal place after rounding to the nearest thousands (e.g., 0.0025 = 0.003)

ab. Ensure rotor zero reference point phi symbol (Φ) has been marked on rear hub and continue with compressor assembly build.

WARNING

Wear protective gloves when handling disk and blade assemblies and other heated components. These components are hot and blades have sharp edges which could cause injury.

ac. Heat the 4th stage disk (24, Figure 7) at 390° - 410° F for 20 minutes.

ad. Install 3rd stage stator (22).

ae. Install 3rd stage air seal (23) onto rear hub.

af. Install 4th stage disk (24) onto 3rd stage air seal (23). Align 4th stage disk stack line with rear hub Zero Mark.

ag. Install 5th stage spacer (26) onto 4th stage disk (24). Align 5th stage spacer stack line with 4th stage disk stack line.

ah. Install build fixture top plate with LPC-001 No. 4 adapter over 5th stage spacer. Engage compression rods and nuts. Tighten nuts to finger tight.

ai. Apply 200-220 psi to fixture and allow assembly temperatures to equalize (9- 10 minutes with forced convection through assembly).

aj. Lubricate tie rods with MIL-L-23699 lubricating oil. Install tie rods, nuts and locktabs and torque to 240-260 pound inches. Bend locktabs to the sides of the tie rod heads.

ak. Release pressure from Axiam build fixture. Disengage compression rods and nuts. Remove top plate and adapter from fixture.

WARNING

Wear protective gloves when handling disk and blade assemblies and other heated components. These components are hot and blades have sharp edges which could cause injury.

al. Heat 5th stage disk (32) at 390° - 410° F for 20 minutes.

am. Install 4th stage stator (27).

an. Install 4th stage air seal (31) over 5th stage spacer (26).

ao. Install 5th stage disk (32) onto 4th stage air seal (31) and 5th stage spacer (26). Align disk stack line with spacer stack line.

ap. Install build fixture top plate with LPC-001 No. 5 adapter over 5th stage disk. Engage compression rods and nuts. Tighten nuts to finger tight.

aq. Apply 200-220 psi to fixture and allow assembly temperatures to equalize (9-10 minutes with forced convection through assembly).

ar. Lubricate tie rods with MIL-L-23699 lubricating oil. Install tie rods, nuts and locktabs and

torque to 240–260 pound inches. Bend locktabs to the sides of the tie rod heads.

as. Release pressure from Axiam build fixture. Disengage compression rods and nuts. Remove top plate and adapter from fixture.

18. ROTOR AND STATOR ASSEMBLY, FRONT COMPRESSOR – DYNAMIC BALANCING. (Figure 9, 13, 14 and Table 4)

a. Attach lift adapter assembly (P/N D–35888–1) to front compressor rear hub.

b. Attach hoist to lift adaptor assembly and place front compressor onto a cart assembly (P/N E–35849–1) and axial locator ring.

c. Remove lift adapter assembly from front compressor.

d. Attach lifting beam assembly (P/N E–35851–1) to hoist. Attach black trunions of the lifting beam assembly to the aft frame weldment, lift and position aft frame weldment over front compressor section aligning the alignment marks of the aft frame weldment to the alignment marks of forward frame weldment. (Figure 9)

e. Position and secure four stator clamps.

f. Heat aft slave race/pulley (P/N D–35887–1) at 280°F (138°C) for 15 minutes in an approved oven (Figure 13).

WARNING

Handling heated component can cause severe burns. Wear approved clothing, eyewear and gloves when handling and assembling hot components.

NOTE

Improperly heating of the slave race can distort or deform the race and render it unserviceable. To prevent damage to the slave race, never heat the race with a torch or other open flame.

g. Install aft slave race/pulley (Figure 13) on rear hub of forward compressor with larger diameter pulley end up. Ensure that 0° reference mark on aft slave race/pulley is aligned with 0° reference mark on the rear hub.

h. While aft slave race/pulley is still hot, install aft retention nut (P/N C–35871–1) so the retention nut is snug and slave race is bottomed on rear hub.

i. Allow aft slave race/pulley and aft retention nut to cool below 100°F (38°C) before proceeding

j. Torque aft retention nut to 1500 to 1800 pound inches.

k. Position aft locking ring over aft slave race/pulley and on saddle insert.

l. Secure aft locking ring to saddle insert with two cap screws and washers.

m. Using an overhead hoist with lifting beam assembly attached to black trunion on the aft frame weldment, lift and remove axial locator ring. Lower aft frame weldment with front compressor so that it is positioned just above the forward frame assembly. Ensure the saddle supports on both the forward and aft frame weldment are aligned and oriented the same.

n. Align aft frame weldment alignment pin and first stage stator alignment pin with forward frame alignment holes.

o. Remove 12 cap screws from storage case at base of cart assembly and loosely install to assist in alignment of forward and aft frame weldment. Lower aft frame weldment with front compressor onto forward frame weldment.

p. Equally tighten 12 cap screws to secure aft frame weldment to forward frame weldment.

q. Disconnect lifting beam assembly from black trunion on the aft frame weldment and connect it to red trunions on the aft frame weldment.

r. Using an overhead hoist with lifting beam assembly attached to red trunions on the aft frame weldment, lift forward and aft frame weldment with front compressor above cart assembly.

s. Reposition forward and aft frame weldment front compressor section so the forward frame weldment is up.

t. Lower forward and aft frame weldment with front compressor onto cart assembly

u. Heat forward slave race (P/N D–35872–1) to 280°F (138°C) for 15 minutes in an approved oven.

WARNING

Handling heated component can cause severe burns. Wear approved clothing, eyewear and gloves when handling and assembling hot components.

NOTE

Improperly heating of the slave race can distort or deform the race and render it unserviceable. To prevent damage to the slave race, never heat the race with a torch or other open flame.

v. Install forward slave race onto the front hub of the forward compressor. Ensure that 0–degree reference mark on forward slave race is aligned with 0–degree reference mark on front compressor front hub (Figure 13).

w. While forward slave race is still hot, install forward retention nut (P/N C–35873–1) using forward retention nut tool so the retention nut is snug and slave race is bottomed on forward compressor hub.

x. Allow forward slave race and forward retention nut to cool below 100°F (38°C) before proceeding

y. Torque forward retention nut to 1500 to 1800 in–lbs.

z. Position forward locking ring over forward slave race and on saddle insert.

aa. Secure forward locking ring to saddle insert with two cap screws and washers.

ab. At drive control panel, ensure that balancing machine main power switch is set to ON position at least 15 minutes.

ac. Using an overhead hoist with lifting beam assembly (P/N E–35581–1) attached to red trunions (Figure 9), lift forward and aft frame weldment with front compressor off of cart assembly and install end cap (P/N D–35890–1) at the aft end of front compressor while aligning 0° marks (Figure 13).

ad. Orient frame assembly (P/N E–35831–1) horizontal so that forward compressor is setting on the support rollers.

ae. Position forward and aft frame weldment with front compressor onto balance machine. Adjust machine supports as necessary so saddle inserts properly align with and set into machine support saddles.

af. Insert retaining clips and cap screws at the support saddles and tighten equally. Disconnect lifting beam assembly from frame weldment and remove from balance machine area.

ag. Install end cap (P/N D–35889–1) at forward end of front compressor while aligning 0° marks.

ah. Remove two cap screws, washers and aft locking ring from saddle inserts.

ai. At each machine support saddle, secure forward and aft frame weldment in balancing machine with two saddle insert retaining clips and cap screws. Tighten equally.

aj. Position drive belt over aft slave race/pulley and apply belt tension 4 turns on belt tensioner.

ak. Lower negative load bearing so the negative load roller has light contact with the forward slave race and tighten two cap head screws.

al. At each machine support assembly, position and secure axial thrust bearings against the end cap steel balls.

am. Position Photo Cell on aft slave race/pulley.

Oil, Lubricating MIL-PRF-23699 1

an. Apply Lubricating Oil MIL–PRF–23699 on all support rollers forward and aft.

ao. Ensure that all debris and tools are removed from balancing machine area.

ap. On CAB 690 screen setup per operating instructions.

aq. Check initial unbalance in Plane X and Y at 900 rpm minimum. Initial unbalance must not be more than 4.00 ounce–inches. If initial unbalance is more than 4.00 ounce–inches, disassemble the rotor and stator to determine cause.

NOTE

The initial combination of four counterweights must be installed within 60 degrees on either side of unbalance vector. If the two extra smaller counterweights are used, they may be installed at any location. This requirement applies to both planes X and Y.

ar. Correct any unbalance in Planes X and Y by adding counterweights (1 and 4 to 6) (Figure 14) and Rivets (2 and 3) as listed. Temporarily secure counterweights with Scotch No. 200 masking tape or equivalent.

as. Residual unbalance in Planes X and Y after counterweights have been added must not be more than 0.10 ounce–inches (Table 4).

at. Mark location of counterweights.

au. Reposition Photo Cell away from aft slave race/pulley and install aft locking ring on slave race.

av. At the aft end of compressor remove four screws and retaining clips from the saddle support. Reposition axial thrust stop down and away from the end cap and steel ball. Remove end cap and steel ball (Figure 13).

aw. At forward end of front compressor section, reposition axial thrust stop down and away from the end cap and steel ball.

ax. At forward end of front compressor section, remove end cap and steel ball.

ay. At the balancing machine, release drive belt tension and remove drive belt from aft slave race/pulley.

az. Install forward locking ring on slave race.

ba. At the forward end of compressor remove four screws and retaining clips from the saddle support.

bb. Loose screws and raise the negative load bearing off of forward slave race.

bc. Using an overhead hoist with lifting beam assembly attached to red trunions, remove forward and aft frame weldment with front compressor from balancing machine (Figure 13).

bd. Position front compressor section forward slave race up and lower the compressor onto the assembly cart ensuring that the frame weldment is fully seated.

be. Remove forward retention nut.

bf. Remove two cap screws and washers that secure forward locking ring to saddle insert. Remove forward locking ring.

bg. Remove forward slave race using hydraulic slave race puller assembly (P/N E–35881–1) as follows:

(1) Position two halves of forward draw sleeve on forward slave race and slightly loosen four retaining bolts.

(2) Attach forward pusher to cylinder and position cylinder on two halves of draw sleeve.

(3) Hand–tighten four retaining bolts to secure cylinder.

(4) At hand pump, close pressure relief valve and actuate hand pump.

(5) When forward slave race is freed, remove cylinder, forward draw sleeve halves and forward slave race as an assembly from front compressor.

(6) Loosen four retaining bolts and separate cylinder aft draw sleeve halves, pusher, and forward slave race

bh. Lift forward and aft frame weldment with front compressor above cart assembly.

bi. Reposition forward and aft frame weldment with front compressor so that aft frame weldment is up and lower down on the assembly cart ensuring the frame weldment is fully seated.

bj. Loosen 12 cap screws and remove 10 screws that secure the aft frame weldment to forward frame weldment and place two screws in jacking holes.

bk. Retighten two screws equally until aft frame weldment is separated from forward frame weldment and remove two screws.

bl. Lift and set aft frame weldment with front compressor forward side up on wood card table.

bm. Secure the weights by using tool PWA 32625 to flare the rivets, clean and remove tape and mark the rivets position.

bn. Lift and reposition aft frame weldment with J52 front compressor so that the aft side is up and place on transportation cart.

bo. Remove aft retention nut.

bp. Remove two cap screws and washers that secure aft locking ring to saddle Insert. Remove aft locking ring

bq. Remove aft slave race/pulley using hydraulic slave race puller assembly (P/N E–35881–1) as follows:

(1) Position two halves of aft draw sleeve on aft slave race/pulley and slightly Loose four retaining bolts.

(2) Attach aft pusher to cylinder and position cylinder on two halves of draw sleeve.

(3) Hand–tighten four retaining bolts to secure cylinder.

(4) At the hand pump, close pressure relief valve and actuate hand pump.

(5) When aft slave race/pulley is freed, remove cylinder, aft draw sleeve halves and aft slave race/pulley as an assembly from front compressor.

(6) Loosen four retaining bolts and separate cylinder, aft draw sleeve halves, aft pusher, and aft slave race/pulley.

br. Loosen and slide back four stator clamps on aft frame weldment.

bs. Lift the aft frame weldment off of the front compressor and place on an assembly cart.

bt. Secure the weights by using tool PWA 32625 to flare the rivets, clean and remove tape and mark the rivets position.

bu. Install transport cover over front compressor.

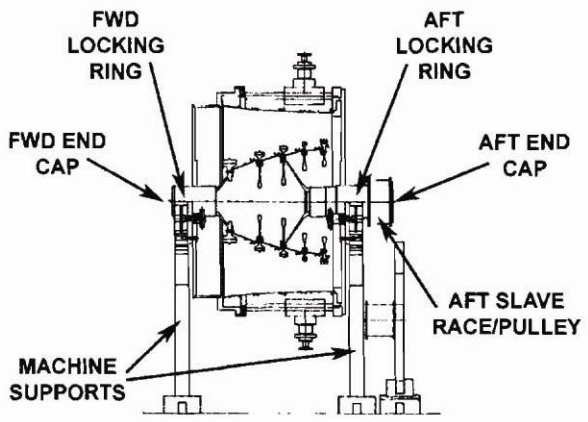

Figure 13. Frame Assembly on Balancing Machine

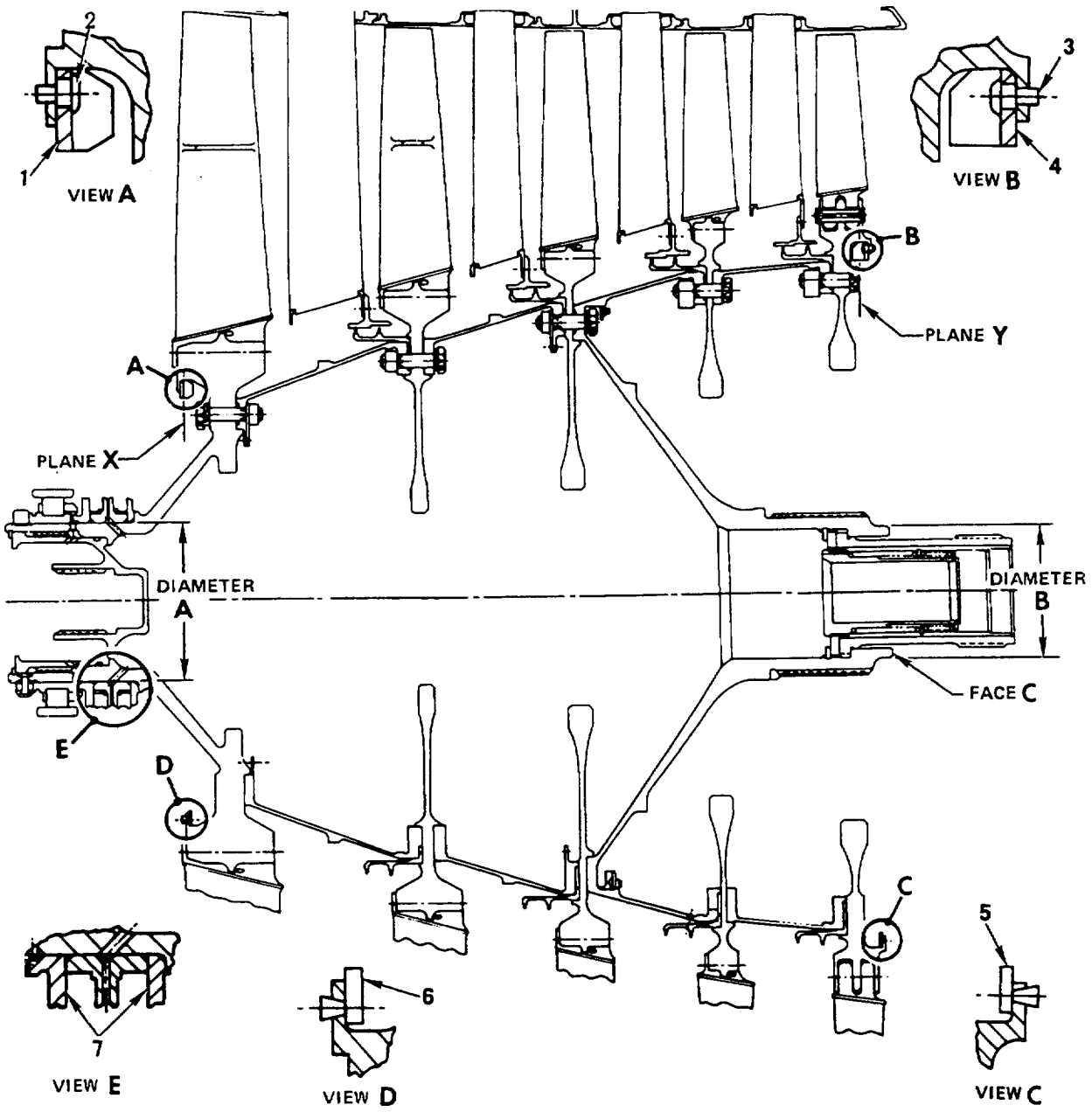

1. P/N 541154 COUNTERWEIGHT (TABLE 4)
2. P/N 541152 RIVET
3. P/N 541152 RIVET
4. P/N 541150 COUNTERWEIGHT (TABLE 4)
5. P/N 541153 COUNTERWEIGHT (TABLE 4)
6. P/N 541153 COUNTERWEIGHT (TABLE 4)

Figure 14. Rotor and Stator Assembly, Front Compressor – Dynamic Balance Check – Typical

Table 4. Counterweights, Front Compressor Rotor

Location	P/N	Application
Front Hub	541153 541154	Counterweights must be installed within ±60 degrees of unbalance vector in one of the following combinations: • 0–4 of P/N 541153 or • 0–4 of P/N 541154 or • Combination of P/N 541153 and P/N 541154 (maximum of four, both P/N's combined) **NOTE** After adding counterweights within ±60 degrees of unbalance vector, two more P/N 541153 counterweights may be used for fine balance anywhere on the balancing flange
5th Stage Disk	541150 541153	Counterweights must be installed within ±60 degrees of unbalance vector in one of the following combinations: • 0–4 of P/N 541150 or • 0–4 of P/N 541153 or • Combination of P/N 541150 and P/N 541153 (maximum of four, both P/N's combined) **NOTE** After adding counterweights within ±60 degrees of unbalance vector, two more P/N 541153 counterweights may be used for fine balance anywhere on the balancing flange

19. ANNOTATE N1 AXIAM BUILD ON ASSEMBLY SERVICE RECORD CARD.

a. Annotate on N1 Compressor Rotor Assembly Service Record card, Section II, Part E: Axiam Build Shaftmate data, Centerline Deviation, Centerline Angle, Biplane Deviation, Biplane Angle (COMNAVAIRFORINST 4790 Series).

THIS PAGE INTENTIONALLY LEFT BLANK

DEPOT MAINTENANCE

ASSEMBLY

COMPRESSOR FRONT SECTION

EFFECTIVITY: ALL MODELS

WP 119 00 Deleted

Refer to NAVAIR 02B–10DAD–6–1V2, WP 019 00, Complete Engine Vertical Assembly

THIS PAGE INTENTIONALLY LEFT BLANK

DEPOT MAINTENANCE

ASSEMBLY AND BALANCING

ROTOR AND STATOR ASSEMBLY, REAR COMPRESSOR

EFFECTIVITY: ALL MODELS

Reference Material

Standard Maintenance Procedures . . . . . NAVAIR 02-1-517
Illustrated Parts Breakdown . . . . . NAVAIR 02B-10DAD-4
GMS 4000/5000 Series Operator Manual AG-J52-GM-OMM-100
Hub Assembly, Rear Compressor Rotor, Front WP . . . . . NAVAIR 02B-10DAD-6-2V3

Alphabetical Index

Subject **Page No.**

Annotate N2 Axiam Build on Assembly Service Record Card 23
Blades, Compressor Rotor (Stages Seven through Twelve) - Installation 6
Blades, Compressor Rotor Installation 5
Blades, Compressor Rotor Sixth Stage - Installation 5
Blades, Compressor Rotor (Sixth through Twelve) - Set up 5
Disk or Hub and Blades Assembly, Rear Compressor
(Seventh through Twelfth Stages) - Final Static Balancing 9
Disk or Hub and Blades Assembly, Rear Compressor
(Sixth through Twelfth Stages) - Initial Static Balancing 6
Introduction 5
Lock, Blade (Stages Seven through Twelve) - Installation 9
Materials Required 4
Pins, Retaining, Sixth Stage Blades Flaring of Rivets 6
Record of Applicable Technical Directives 1
Root Sealant, Blade and Disk Assembly (Stages Seven through Twelve) 7
Rotor and Stator Assembly, Rear Compressor 11
Rotor and Stator Assembly, Rear Compressor - Assembly Heavy Angle Process 13
Rotor and Stator Assembly, Rear Compressor - Axiam Build and Verification 23
Rotor and Stator Assembly, Rear Compressor - Axiam Measurement for Build 20
Rotor and Stator Assembly, Rear Compressor - Recording Disk and Spacer Snap Fits 22
Rotor and Stator Assembly, Rear Compressor - Dynamic Balancing 21
Rotor and Stator Assembly, Rear Compressor - Marking for Heavy Angle Procedure Only 11
Spacer Assembly - Static Balance 9
Support Equipment Required 2

Record of Applicable Technical Directives

Type Number	Date	Title and ECP No.	Date Incorp.	Remarks
		None		

Support Equipment Required

Type Design/ Part Number	Nomenclature	Figure No.
–	Torque wrench (0 to 600 pound–inches)	–
GMS–4060–HPC–001	Rear Compressor Axiam Build Fixture	–
GMS–4060–HPC–002	Rear Compressor Axiam Build Fixture	–
B–35995–1	Three Point Lifting Sling	–
C–35953–1	Aft Retention Nut	–
C–36037–1	Aft Slave Race Puller	–
D–35954	Aft Slave Race/Pulley	–
D–36000–1	Forward Slave Race	–
D–36001–1	Forward End Cap	–
D–36059–1	Aft End Cap	–
E–35851–1	Lifting Beam Assembly	–
E–35997–1	Forward and Aft Frame Assembly	–
E–35998–1	Forward Slave Race Puller	–
P–8192–A	Lift Adapter Assembly	–
PWA 6580	Sling	–
PWA 7387	Wrench	–
PWA 8170–23	Housing	–
PWA 8170–24	Housing	–
PWA 8180–31	Bearing, balance, front	–
PWA 8180–35	Bearing, balance, rear	–
PWA 9503	Bar (2 required)	–
PWA 9552	Puller	–
PWA 9553	Puller	–
PWA 9554	Nut	–
PWA 9556	Drift	–
PWA 9562	Gage	–
PWA 9564	Pedestal	–
PWA 9568	Wrench	–
PWA 9625	Wrench	–
PWA 9681	Ring	10
PWA 9752	Nut	–
PWA 9883	Yoke	–
PWA 9896	Locator	–
PWA 9905	Sling	–
PWA 12625	Fixture	–
PWA 14370	Jaw	–

Support Equipment Required (continued)

Type Design/ Part Number	Nomenclature	Figure No.
PWA 14371	Liner	–
PWA 14373	Anvil (alternate to machine)	–
PWA 14397	Holder	–
PWA 14419	Stand	10
PWA 14420	Adapter	10
PWA 14556	Pulley	–
PWA 14564	Fixture	–
PWA 14579	Riveter	–
PWA 14678	Adapter	–
PWA 14684	Riveter	–
PWA 14933	Adapter	–
PWA 14934	Screws	–
PWA 17025	Adapter (for Tinius Olsen machine without SAE spindle)	–
PWA 17971	Screws	–
PWA 21735	Plugs	–
PWA 21751	Plugs	–
PWA 21752	Washers	–
PWA 21756	Screws	–
PWA 21757	Screws	–
PWA 22634	Machine	–
PWA 22681	Punch	–
PWA 22682	Punch	–
PWA 30463	Anvil	–
PWA 34015	Adapter	–
PWA 34016	Anvil	–
PWA 34017	Anvil	–
PWA 34018	Anvil	–
PWA 34019	Anvil	–
PWA 34020	Anvil	–
PWA 34021	Anvil	–
PWA 34025	Punch	–
PWA 34026	Punch	–
PWA 34029	Punch	–
PWA 34030	Punch	–
PWA 34032	Adapter	–
PWA 34033	Anvil	–

Support Equipment Required (continued)

Type Design/ Part Number	Nomenclature	Figure No.
PWA 34034	Punch	–
PWA 34648	Adapter	–
PWA 34651	Anvil	–
PWA 34654	Peen	–
PWA 38370	Riveting machine	–
PWA 38374	Pad	–
PWA 38375	Holder	–
P–9915–D	Balance bearing GO/NO GO gage	8A, 8B, 8C, 8D, 8E
–	Digital Pyrometer	–

Materials Required

Consumables

Specification/Identification	Nomenclature
DGF–123	Lubricant, dry film graphite
Micro–Supreme (purple)	Dye, layout
MIL–M–7866	Lubricant, Molybdenum disulfide
MIL–PRF–23699	Oil, lubricating
TT–I–735	Alcohol, Isopropyl

Expendables

Part Number	Nomenclature	Quantity
MS9245–03	Pin	3
2185023	Seal, Saddle	60
2196853	Counterweight	AR
2196855	Counterweight	AR
351259	Expander	2
351261	Ring, seal	2
355924	Bushing	60
377467	Rivet	AR
380238	Key washer	12
395917	Washer	12
461245	Pin, retaining	60
461246	Rivet	60
528445	Counterweight	AR
528446	Counterweight	AR
534493	Counterweight	AR

Expendables

534494	Rivet	AR
541156	Counterweight	AR
541157	Counterweight	AR
728153	Lock, compressor blade 7th stage	58
728154	Lock, compressor blade 8th stage	60
728155	Lock, compressor blade 9th stage	64
728156	Lock, compressor blade 10th stage	70
728157	Lock, compressor blade 11th stage	80
728161	Lock, compressor blade 12th stage	74

1. INTRODUCTION.

a. This work package (WP) contains instructions for assembling and balancing a fully repaired rear compressor rotor and stator assembly. Highlights of these instructions are as follows:

- Blades are installed in 6th through 12th stage disks.
- Each rotor stage and the spacers are static balanced.
- Each rotor stage and the spacers are measured by axiam.
- Blade root sealant applied.
- Each rotor stage has final static balance.
- Blade locks are installed.
- Rear compressor rotor and stator is assembled and build is verified by axiam.
- Rotor and stator assembly is placed in balancing fixture and dynamically balanced.
- Rotor and stator are removed from balancing fixture.

b. Before assembling the rear compressor rotor and stator, be sure that the correct parts are being used. Refer to NAVAIR 02B–10DAD–4 for correct parts listing.

2. BLADES, COMPRESSOR ROTOR INSTALLATION.

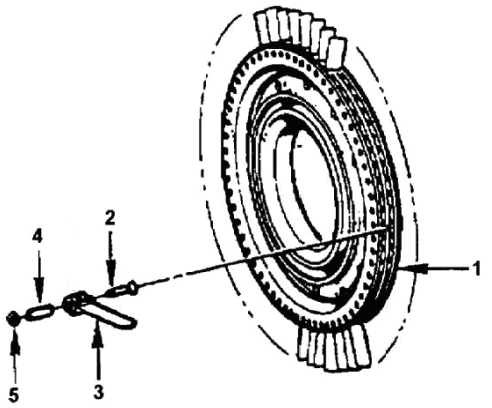

1. COMPRESSOR ROTOR 6TH STAGE DISK
2. RIVET, P/N 461246
3. COMPRESSOR ROTOR 6TH STAGE BLADE
4. PIN, P/N 461245
5. COMPRESSOR ROTOR BUSHING, P/N 355954

Figure 1. Blades, Rear Compressor Rotor Sixth Stage – Installation

3. BLADES, COMPRESSOR ROTOR. (STAGES SIX THROUGH 12) – SET UP (Figure 1)

a. Power on all components of moment/mass weighing blade distribution system.

NOTE

Power on all components of moment/mass weighing blade distribution system. Allow to warm up for 15 minutes prior to use.

b. Prepare blade distribution system and select ”Blade Set Type” to correspond with compressor stage.

c. Zero out mass weighing scale and check for accuracy.

d. Weigh blade set using mass weighing scale attached to blade distribution system. Number blades as they are measured using blue or black mark–a–lot marker.

e. Install PWA 14678 static balance adapter in balance machine.

f. Install the four PWA 14678 detail locating plugs in PWA 14678 adapter plate. The correct location for stage being balanced is marked on adapter.

g. Index the locating plugs to engage snap diameter of hub.

h. Tighten the locating plugs.

i. Install bare disk, or hub so that snap diameter mates with locating plugs. Tap assembly near each plug to be sure it is firmly seated.

j. Install cap screws and washers in the two hold down plugs to secure assembly on locating plugs with PWA 14678 detail bolt and washer. Torque cap screws to 20–30 pound inches.

k. Check unbalance of bare disk or hub as follows:

(1) Set balance machine for Tooling Compensation.

(2) Rotate disk at 900 rpm minimum and take a reading.

(3) Remove disk from PWA 14678 adapter plate and reinstall 180° from original location.

(4) Rotate disk at 900 rpm minimum and check unbalance reading.

l. Mark location of No. 1 slot on front side of compressor hub/disk with layout dye, Micro Supreme (purple), corresponding with the 0 degree location on the balance machine.

m. Enter hub/disk unbalance reading into blade distribution system under bare disk data.

n. Optimize blade orientation per blade distribution system manual.

o. Remove disk from balance machine.

4. BLADES, COMPRESSOR ROTOR (SIXTH STAGE) – INSTALLATION. (Figure 1).

a. Place 6th stage disk (1, Figure 1) on balance machine forward face up.

b. Install all blades (3) into the disk pin root slots according to blade number and disk position using plan from blade distribution system.

c. Install pins (4) from front side of disk. Chamfered hole in pin goes forward.

d. Install rivets (2), heads against rear side of disk, through each pin. Temporarily hold rivets in place with Scotch No. 200 masking tape or equivalent.

5. BLADES, COMPRESSOR ROTOR (STAGES SEVEN THROUGH TWELVE) – INSTALLATION.

a. Place disk on bench, front side up.

NOTE

Ensure bearing surfaces on blade root and disk slot are free of PWA 544–1 sealant.

b. Install blades into disk slots. Maintain radial outward load to keep blade root bearing surface in contact with disk slots. Install all blades according to blade number and disk position using plan from blade distribution system.

6. DISK OR HUB AND BLADES ASSEMBLY, REAR COMPRESSOR (SIXTH THROUGH TWELFTH STAGES) – INITIAL STATIC BALANCING.

a. Re–install hub/disk on balance machine per paragraph BLADES, COMPRESSOR ROTOR – SET UP this WP.

b. Rotate assembly at 900 rpm minimum and check unbalance reading.

c. If unbalance is more than 0.20 ounce–inch, reposition blades as indicated by balance machine.

d. After unbalance has been corrected to less than 0.20 ounce–inch, mark heavy point of assembly with layout dye, Micro Supreme (purple).

e. Remove assembly from balance machine.

f. Number blades starting with number 1, in sequence clockwise from rear of engine, using marking ink or silver pencil.

7. PINS, RETAINING, SIXTH STAGE BLADES FLARING OF RIVETS. (Figure 2)

a. Rotor assembly has been previously assembled with rivets and retaining pins held in place with tape.

NOTE

Rivets may be set by either of the following two methods. Rivets may also be set manually using PWA 14373 and PWA 30463 anvils.

b. Prepare to set rivets using PWA 22634 rivet setting machine as follows:

(1) Install PWA 34032 adapter plate in PWA 22634 rivet setting machine.

(2) Use PWA 14370 riveter chuck jaws and PWA 14371 liners with rivet setting machine.

(3) Mount 6th stage disk and blades assembly in PWA 22634 machine.

(4) Remove masking tape that was used to secure rivets and retaining pins.

(5) Engage PWA 34033 flat anvil with flat head of rivet.

(6) Align PWA 34034 punch with rivet hole. Carefully engage punch with rivet.

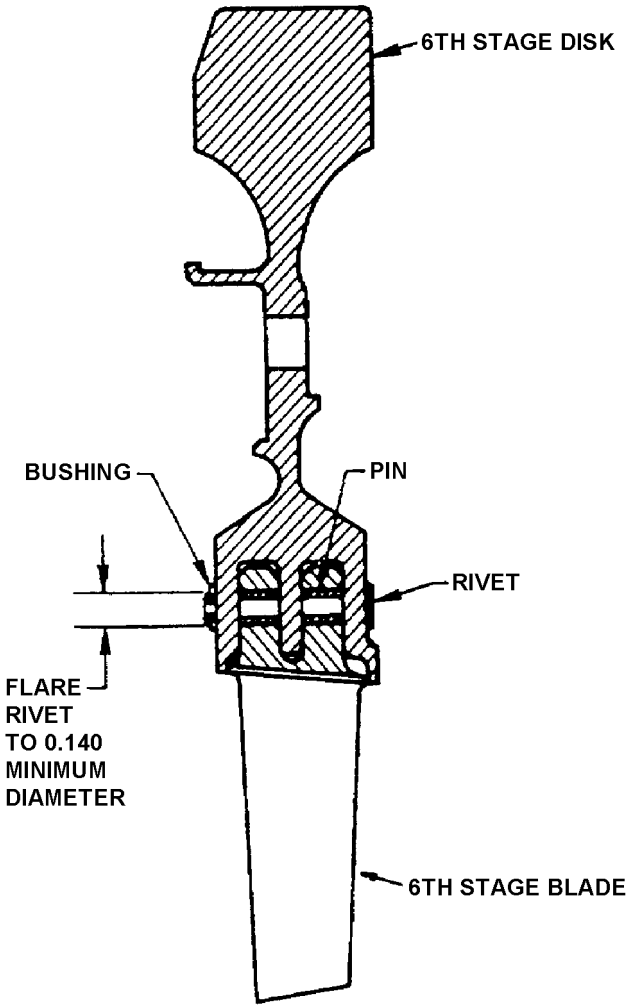

Figure 2. Pins, Retaining, Sixth Stage Blades – Flaring of Rivets

c. Prepare to set rivets using PWA 38370 orbital riveting machine:

(1) Mount PWA 38375 holder to traverse piston on PWA 38370 riveting machine and secure with four screws.

(2) Insert PWA 38374 pad into holder.

(3) Install PWA 34654 peen into peen holder of the orbital drive motor on the riveting machine. This tool will be used to form the flare portion of the rivet.

(4) Mount PWA 34648 disk adapter to vertical cross slide assembly of riveting machine using four screws.

(5) Install compressor disk to adapter, locating alignment pins through any tie bolt holes. Secure disk to adapter using cap screws provided.

(6) Install PWA 34651 anvil to orbital rivet machine vertical and cross slide assembly. This tool will back up the formed head of the rivet during flaring operation.

(7) Remove masking tape that was used to secure rivets and retaining pins.

(8) Install bushings onto forward end of rivets.

d. Flare rivets as follows:

(1) With flaring tooling engaged with rivet, flare rivet to 0.140 inch minimum diameter (Figure 2).

(2) Inspect rivet for cracks and full flare.

(3) Flare all remaining rivets. (QA)

8. ROOT SEALANT, BLADE AND DISK ASSEMBLY (STAGES SEVEN THROUGH TWELVE).

NOTE

- Sealant is PWA 544–1. PWA 544–1 is used to fill voids after blade is installed.
- Sealant shall be stirred vigorously immediately prior to application.
- Sealant shall be kept covered in an airtight polyethylene container when not being mixed or used.
- Usable storage life of sealant after mixing and storing in note 3 is limited to a maximum of fourteen (14) days. Unused material shall be discarded beyond this time limit.
- White gloves shall be worn when applying sealant.

a. Place disk on bench, front side up.

b. Remove blades and tablocks from disk.

c. Mask disk snaps with tape to prevent contamination by sealant on mating surfaces.

d. Clean all blade slot surfaces of hub and disks. Refer to NA 02–1–517, SPOP 208.

NOTE

Air–dry the cleaned parts for a minimum of ten (10) minutes before applying sealant.

NOTE

- The sealant must be applied within two hours of cleaning the blade slot.
- Ensure bearing surfaces on blade root and disks are free of PWA 544–1 sealant.

e. Beginning with blade number 1, apply PWA 544–1 (NAVAIR 02–1–517, SPOP 747) sealant to blade root and platform side edges.

f. Install the blades in the slots of the rotor in the established sequence. While sliding the blades into the slots, maintain an outward radial load on the blade to make sure the blade–bearing surface on the blade root and slot is free of sealant.

g. Install the blade lock.

h. Remove excess sealant from beneath blade tangs. Tap forward face of blade root to seat tang, being careful not to bend tang.

i. Repeat installation for remaining blades and blade locks, installing each blade sequentially clockwise.

j. Remove any excess sealant.

k. Back–light the blade root and check for thru–voids.

CAUTION

No voids are permitted between the assembled blade root and disk at the front and rear disk face.

l. Sealant touch up after assembly permissible. Apply PWA–544–1 sealant to fill voids between blade root and disk front and rear face (NAVAIR 02–1–517, SPOP 747).

NOTE

Blade locks must be final crimped while sealant is still viscous.

m. Bend blade lock tabs per LOCK, BLADE (STAGES SEVEN THROUGH TWELVE) – INSTALLATION, this WP.

n. Check the blade lock bend end clearance.

o. Remove any excess sealant. Ensure no sealant is present in disk snap areas.

p. Cure per SPOP 747 (NAVAIR 02–1–517).

NOTE

Air dry at room temperature for at least 1 hour prior to final static balance check.

9. DISK OR HUB AND BLADES ASSEMBLY, REAR COMPRESSOR (SEVENTH THROUGH TWELFTH STAGES) – FINAL STATIC BALANCING.

NOTE

- The following procedure may be omitted with process control of the root sealant application, if the application of root sealant is consistent.
- Use PWA 17025 adapter for Tinius–Olsen machine without SAE spindle.

a. Install PWA 14678 static balance adapter in balance machine.

b. Install the four locating plugs.

NOTE

The correct location for the stage being balanced is marked on adapter.

c. Index the locating plugs at dial setting 3 for each of the rear compressor rotor stages.

d. Install disk or hub and blade assembly so that snap diameter mates with locating plugs. Tap assembly near each plug to be sure it is firmly seated.

e. Install PWA 14397 holder to secure the assembly on locating plugs. Secure with PWA 14678 detail bolt and washer.

f. Calibrate balance machine per manufacturer's instructions.

g. Check unbalance of disk or hub and blade assemblies as follows:

(1) Rotate assembly at 900 rpm minimum and check unbalance reading.

(2) If unbalance is more than 0.40 ounce–inch, locally remove excess sealant.

(3) After unbalance has been corrected to less than 0.40 ounce–inch, mark heavy point of assembly with layout dye, Micro Supreme (purple). Omit this step on front compressor hub, 7th stage disk. Marking is not required for it. (QA)

h. Remove assembly from balance machine.

10. LOCK, BLADE (STAGES SEVEN THROUGH TWELVE) – INSTALLATION. (Figure 3 and Table 1)

- Do not use blade locks on 6th stage.
- If desired, locks may be bent using PWA 22634 machine. Refer to list of tools (Table 1).

a. Insert blade locks (prebent tab pointing toward blade tip) from front side of disk (or hub) (Figure 3). Use locks as follows:

Stage	Lock	Quantity
7	728153	58
8	728154	60
9	728155	64
10	728156	70
11	728157	80
12	728161	74

WARNING

Wear gloves when handling disk and blade assemblies. Blades have sharp edges which could cause personal injury.

b. Place disk (or hub) and blades assembly on PWA 12625 fixture, rear side up.

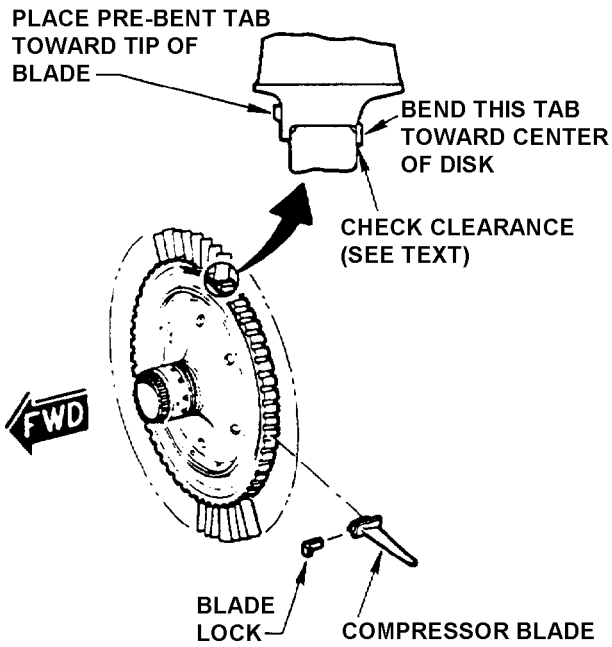

Figure 3. Lock, Blade (Stages Seven through Twelve) – Installation

c. Adjust anvil of PWA 12625 so that it solidly contacts front side of blade lock. Secure the anvil in position.

d. Using a brass drift, bend tabs inboard toward center of disk with series of light taps and a rolling motion. Tabs of locks must conform to contour of disk as closely as possible.

e. Inspect tabs for looseness, no fore or aft movement is acceptable. Clearance between tab and face of disk must not be more than 0.005 inch with anvil in place, or 0.010 inch with anvil removed (Figure 3). (QA)

11. SPACER ASSEMBLY – STATIC BALANCE. (Figure 4 and Table 2)

NOTE

Balancing is required only if spacer has received rework involving removal of metal or if evidence exists that a counterweight has been lost or has shifted position.

a. Set up spacer for balance as follows:

(1) Install PWA 14933 adapter on balance machine.

(2) Install two PWA 21735 hold–down plugs on PWA 14933 adapter.

(3) Install four PWA 21751 locating plugs on PWA 14933 adapter.

(4) Index the plug dials for the stage being balanced.

Stage	Dial Setting
8	9
6	8
7	8
9	8
10	8
11	8

NOTE

Install spacer so that arrows on tie rod tubes are pointing up.

(5) Install spacer on the locating plugs. Align two of the tie rod tubes with PWA 21735 hold down plugs.

Table 1. Tools for Bending Blade Locks with PWA 22634 Machine

Stage	Adapter	Backup Anvil	Prebend Punch	Finish–bend Punch
7	PWA 34015	PWA 34016	PWA 22681*	PWA 22682
8	PWA 34014	PWA 34020	PWA 22681*	PWA 22682
9	PWA 34014	PWA 34021	PWA 22681*	PWA 22682
10	PWA 34014	PWA 34018	PWA 34026	PWA 34029
11	PWA 34014	PWA 34019	PWA 34026	PWA 34029
12	PWA 34014	PWA 34018	PWA 34026	PWA 34029
* Use with PWA 23369 angular adapter and PWA 23368 prebend head				

(6) Turn the locating plugs so that eccentrics hold the spacer, then lock plugs in position.

(7) Install screws with PWA 21752 washers through tie rod holes to secure spacer to the hold down plugs. Use screws as follows:

Spacer	Screw
6th to 7th	PWA 17971
7th to 8th	PWA 17971
8th to 9th	PWA 21757
9th to 10th	PWA 21756
10th to 11th	PWA 14934
11th to 12th	PWA 14934

b. Calibrate balance machine per manufacturers instructions.

c. Balance the spacers as follows:

CAUTION

- Do not damage tie rod tube when removing or installing counterweights.
- Counterweights must have enough tension to fit tightly on tie rod tube.
- Do not use more than five counterweights on any one spacer.
- Not more than one weight per tie rod tube.

(1) Rotate spacer at 600 rpm minimum.

(2) Final static unbalance of spacer must not be more than 0.200 ounce–inch.

(3) If initial unbalance is less than 0.500 ounce–inch, correct by adding two counterweights, 180 degrees apart (Figure 4). One of these counterweights must be Class I (Table 2).

(4) If initial unbalance is more than 0.500 ounce–inch correct by adding up to five counterweights. These counterweights may be added on up to five adjacent tubes.

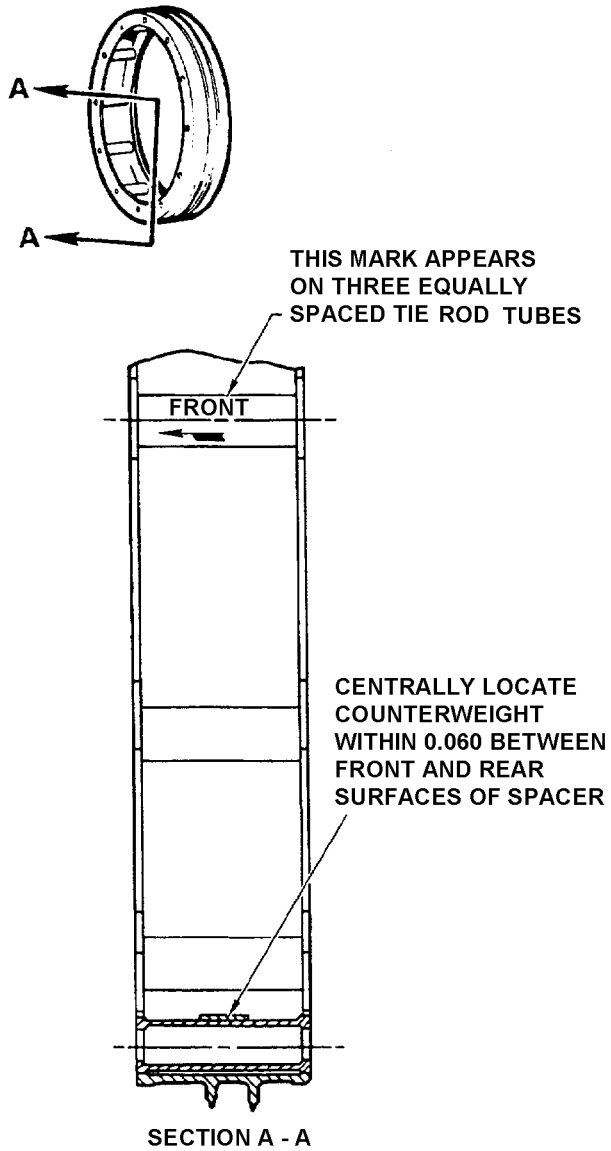

Figure 4. Counterweight, Rear Compressor Rotor Spacer – Installation

(5) Mark point of most unbalance with layout dye, Micro Supreme (purple). (QA)

Table 2. Rear Compressor Spacer Counterweight Classification Data

Class Suffix	Weight (Ounces)
1	0.08019 to 0.08703
2	0.09367 to 0.10051
3	0.10735 to 0.11419
4	0.12102 to 0.12786
5	0.13470 to 0.14154
6	0.14837 to 0.15521
7	0.16205 to 0.16889
8	0.17573 to 0.18257
9	0.18940 to 0.19624

12. ROTOR AND STATOR ASSEMBLY, REAR COMPRESSOR.

13. ROTOR AND STATOR ASSEMBLY, REAR COMPRESSOR – MARKING FOR HEAVY ANGLE PROCEDURE ONLY (ALTERNATE ASSEMBLY).

NOTE

This step may be omitted if compressor is assembled via Axiam procedure defined in ROTOR AND STATOR ASSEMBLY, REAR COMPRESSOR AXIAM ASSEMBLY PROCEDURE, this WP.

a. Place the rear compressor rear hub on bench, front side up.

b. Locate electro–etched eccentricity symbol (”X” in a circle) on O.D. of hub on flat below splines.

c. Ink mark eccentricity symbol (”X” in a circle) on center of conical web of hub in line with hole which is closest in line with the electro–etched symbol (”X” in a circle).

d. Place rear compressor front hub and blade assembly on bench with hub up.

e. Locate electro–etched symbol (”X” in a circle) in I.D. of splined end of hub and position toward assembler.

f. Ink mark symbol (”X” in a circle) on center of inner web in line with nearest tie rod hole that is inline with the electro–etched symbol (”X” in a circle).

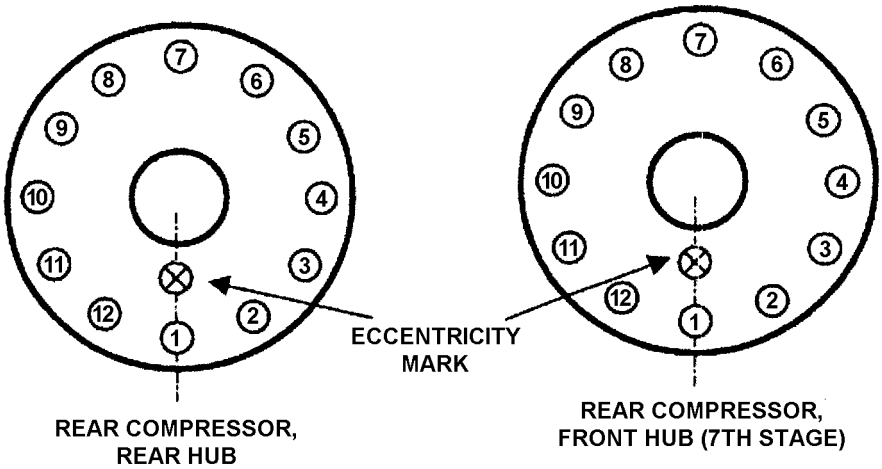

Figure 5. Front Hub and Blades, 7th Stage, Stacking Index Mark

Table 3. Rear Compressor, Front Hub Stack Indexing Mark Location

Bolt location of radial inline with heavy angle noted on Rear Compressor		Bolt hole location to ink mark with ”X” on Rear Compressor	
Bolt Hole	1	Bolt Hole	10
Bolt Hole	2	Bolt Hole	11
Bolt Hole	3	Bolt Hole	12
Bolt Hole	4	Bolt Hole	1
Bolt Hole	5	Bolt Hole	2
Bolt Hole	6	Bolt Hole	3
Bolt Hole	7	Bolt Hole	4
Bolt Hole	8	Bolt Hole	5
Bolt Hole	9	Bolt Hole	6
Bolt Hole	10	Bolt Hole	7
Bolt Hole	11	Bolt Hole	8
Bolt Hole	12	Bolt Hole	9

NOTE

To ensure that rear compressor front hub spline eccentricity symbol (”X” in a circle) is located within 90° ± one tie bolt of eccentricity symbol (”X” in a circle”) on rear compressor, rear hub, perform the following steps.

(1) Place the rear and front hub on bench with eccentricity symbol (a circle with a ”X” in it) facing artisan.

(2) Starting with tie bolt closest in line with eccentricity symbol (a circle with a ”X” in it), number each tie bolt as shown in figure 5.

(3) On the rear hub, locate the tie bolt nearest in line with the heavy angle mark. Using Table 3, find the respective bolt hole under the ”Rear Hub” column.

(4) Note the bolt hole number listed under the ”Front Hub” column on the same row.

(5) Mark an ”X” with ink on the center one third of the front hub web in line with the bolt hole number noted on Table 3.

NOTE

EXAMPLE: If the heavy angle mark is located near the number 7 bolt hole on Rear Hub, than an ”X” should be marked on the front hub in line with tie bolt number 4.

14. ROTOR AND STATOR ASSEMBLY, REAR COMPRESSOR – ASSEMBLY HEAVY ANGLE PROCESS (ALTERNATE ASSEMBLY). (Figures 6 through 8)

NOTE

- All mating surfaces of spacers, disk and blade assemblies and shroud assemblies must be clean and free of damage.
- Ensure disk snap diameters and mating faces are clean and free from raised metal, coating overspray, root sealant, or debris.
- Clean with lint free cloth or a small Arkansas stone or equivalent.
- If mating surface cannot be easily cleaned by artisan, reject hardware.
- Ensure oven is clean and free of debris that could transfer onto the disk mating surfaces while heating.

WARNING

Wear protective gloves when handling disk (or hub) and blade assemblies. These assemblies are hot and blades have sharp edges which could cause personal injury.

a. Place all disk and blade assemblies in oven and heat. The temperature of the disks web near the snap should be heated to 240°F ±25°F and maintained at temperature for a minimum of ten minutes prior to assembly.

NOTE

- Verify disk snap temperature with digital pyrometer.
- Temperature of any part not to exceed 300°F.

b. Install balance bearing on rear hub as follows:

(1) Heat PWA 8180–35 rear balance bearing in hot oil tank to 180°F to 200°F (82°C to 93°C).

Lubricant DOD–L–25681 31

(2) Apply a thin, even coat of dgf–123 on No. 4 bearing journal area.

(3) Install balance bearing on hub. Use PWA 9556 drift to seat the bearing.

c. Install rear half of PWA 14564 balance fixture on PWA 9564 pedestal.

d. Secure rear hub in balance fixture as follows:

(1) Install rear hub (29, Figure 6) into rear half of balance fixture. Balance bearing fits into recessed area at bottom of fixture.

(2) Adjust jackscrew at bottom of pedestal to contact inner race of balance bearing.

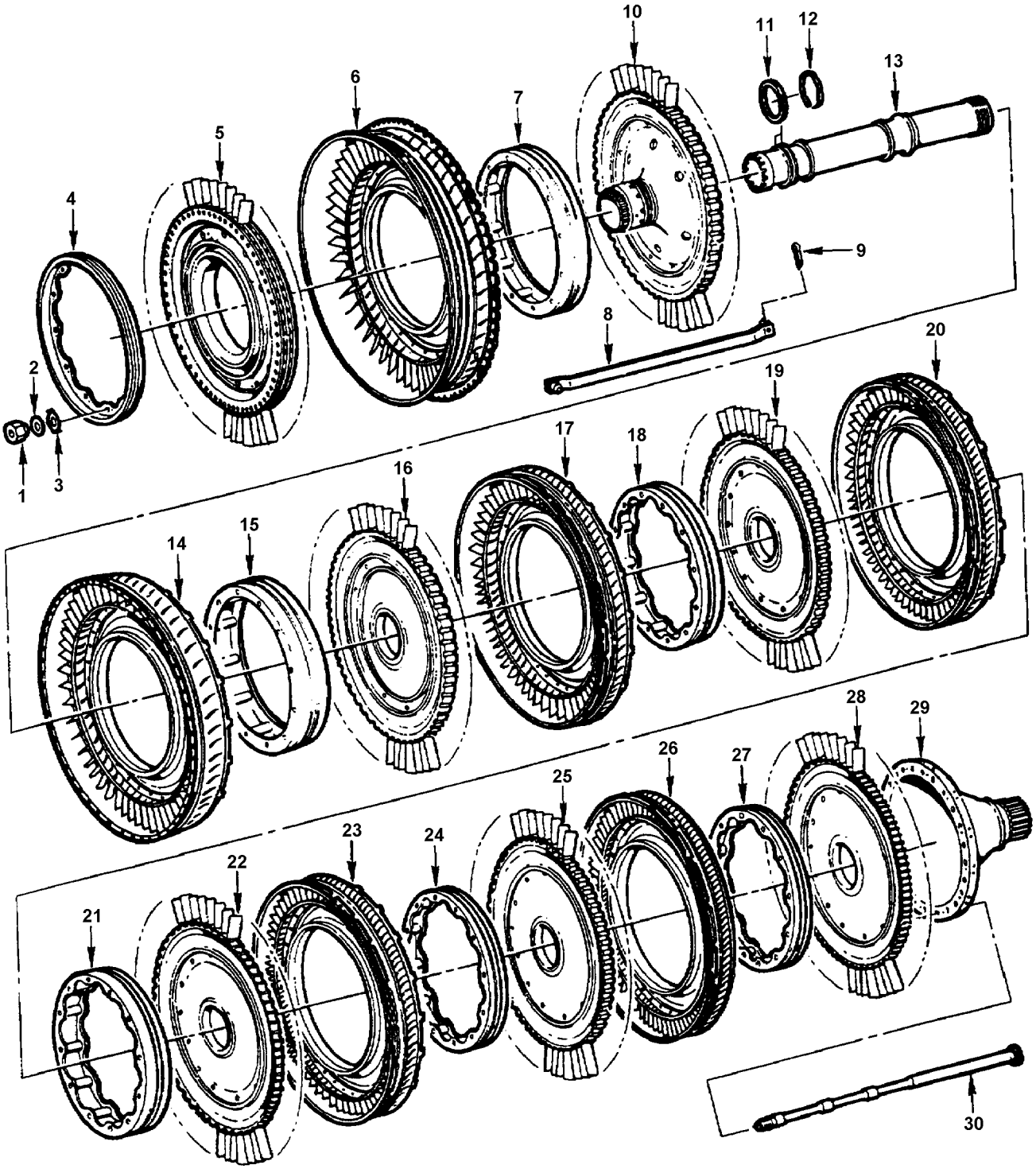

Figure 6. Rotor and Stator Assembly, Rear Compressor – Exploded View (Sheet 1 of 2)

1. NUT (12 REQUIRED)
2. WASHER (12 REQUIRED)
3. WASHER, KEY (12 REQUIRED)
4. SEAL, AIR, FRONT, REAR COMPRESSOR ROTOR
5. DISK AND BLADES ASSEMBLY, 6TH STAGE
6. COMPRESSOR STATOR ASSEMBLY, 6TH STAGE
7. SPACER, COMPRESSOR ROTOR, 6TH STAGE
8. STRAP, COMPRESSOR STATOR (3 REQUIRED)
9. PIN
10. HUB AND BLADES, REAR COMPRESSOR, FRONT, 7TH STAGE
11. SEAL RING, METAL (2 REQUIRED)
12. EXPANDER, SEAL RING (2 REQUIRED)
13. TUBE, SEALING, REAR COMPRESSOR
14. COMPRESSOR STATOR ASSEMBLY, 7TH STAGE
15. SPACER, COMPRESSOR ROTOR, 7TH STAGE
16. DISK AND BLADES ASSEMBLY, 8TH STAGE
17. COMPRESSOR STATOR ASSEMBLY, 8TH STAGE
18. SPACER, COMPRESSOR ROTOR, 8TH STAGE
19. DISK AND BLADES ASSEMBLY, 9TH STAGE
20. COMPRESSOR STATOR ASSEMBLY, 9TH STAGE
21. SPACER, COMPRESSOR ROTOR, 9TH STAGE
22. DISK AND BLADES ASSEMBLY, 10TH STAGE
23. COMPRESSOR STATOR ASSEMBLY, 10TH STAGE
24. SPACER, COMPRESSOR ROTOR, 10TH STAGE
25. DISK AND BLADES ASSEMBLY, 11TH STAGE
26. COMPRESSOR STATOR ASSEMBLY, 11TH STAGE
27. SPACER, COMPRESSOR ROTOR, 11TH STAGE
28. DISK AND BLADES ASSEMBLY, 12TH STAGE
29. HUB, REAR COMPRESSOR ROTOR
30. TIE ROD, REAR COMPRESSOR ROTOR (12 REQUIRED)

Figure 6. Rotor and Stator Assembly, Rear Compressor – Exploded View (Sheet 2)

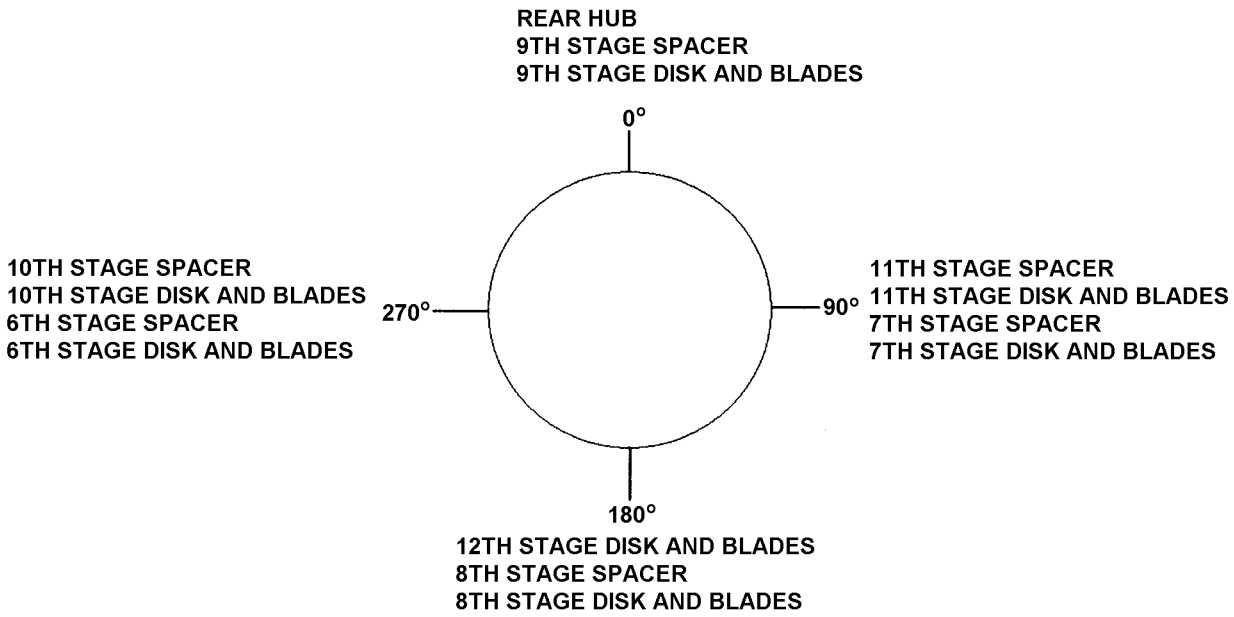

Figure 7. Disks, Hubs and Spacers, Rear Compressor Rotor – Installation Positions

(3) Install clamps to secure outer race of bearing to the balance fixture.

NOTE

Steps e. through n. should be completed as quickly as possible. The assembly should be completed within ten (10) minutes to prevent hot hardware from normalizing before assembly is torqued.

e. Install 12th stage disk and blades (28), 11th stage spacer (27) and 11th stage stator (26) as follows:

(1) Verify with a digital pyrometer that disk web near the snaps are 240°F ±25°F prior to continuing the assembly.

NOTE

Insert PWA 9503 aligning bar through tie rod hole that is closest to unbalance mark on rear hub. This will locate zero degree point for spacing of unbalance marks during assembly.

(2) Install one PWA 9503 aligning bar through bottom side of rear hub. Secure the bar with clamp arrangement to the rear hub. Bar remains in this position for remainder of assembly procedure.

(3) Install 12th stage disk and blades on rear hub. Index the unbalance marks (Figure 7).

(4) Install a second PWA 9503 aligning bar and tap disk and blades to seat. Remove second PWA 9503 aligning bar.

CAUTION

- Be sure that arrows on tie rod tubes inside spacer are pointing up.
- 11th stage disk P/N 2186911 and 11th stage spacer P/N 2186879 must be used in sets. Do not intermix with other disks and spacers.

(5) Install 11th stage spacer on disk. Space the unbalance marks on disk and spacer (Figure 7).

(6) Install a second PWA 9503 aligning bar and tap spacer to seat. Remove second PWA 9503 aligning bar.

(7) Install 11th stage stator assembly over 12th stage disk. Seat the rear flange of stator on ring of balance fixture.

f. Install 8th through 11th stage disk and blade assemblies (16, 19, 22 and 25, Figure 6) spacers (15, 18, 21 and 24) and 7th through 10th stage stators (14, 17, 20 and 23) using the same procedure as step e. Observe the following requirements during assembly:

- Space the unbalance marks between disks and spacers (Figure 7).
- Be sure that arrows on tie rod tubes inside spacers point up.
- Align offset slots and tabs on flanges of stators.
- Check around each stator flange to be sure they are properly seated.

NOTE

Preparation and chill of tube should be done prior to beginning the compressor stack, step e.

g. Install sealing tube (13, Figure 6) into front hub and install front hub as follows:

NOTE

Expanders (12) removed from sealing tube (13) may be reused, only if the removed expanders gap (in free state) is 0.500 to 0.563 inch. If gap is less than 0.500 inch, reforming to attain usable gap dimension is not permitted.

(1) Install rings (11) and new expanders (12) into groove at front of sealing tube. Assemble them so that ring gaps are staggered more than 90 degrees and expander gaps are approximately opposite.

(2) Install a hose clamp around rings and expanders. Tighten the clamp to close gaps on rings and expanders so that they will fit into front hub when oil tube is installed.

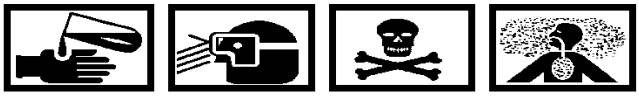

Molybdenum Disulfide Lubricant
MIL–M–7866

Oil, Lubricating MIL-PRF-23699 1

(3) Mix a compound of 10% MIL–M–7866 molybdenum disulfide and 90% MIL–PRF–23699 lubricating oil.

(4) Apply a thin coat of the above compound around both ends of tube.

NOTE

Install sealing tube into hub, then install assembled hub and tube as quickly as possible. This must be done quickly so that snap diameters can be engaged on hub and 8th stage spacer before hub has cooled.

(5) Install sealing tube into rear side of front hub and blades (10). Loosen and remove hose clamp as the seal rings go into the hub. (QA)

(6) Check that sealing tube turns inside hub.

NOTE

- Space the unbalance mark on the 7th Stage Spacer per Figure 7. Index the front hub so that the tie bolt hole in line with the "X" is located at the 0° position illustrated in Figure 7.
- This shall be done so that the Rear Compressor Front Hub spline eccentricity symbol (circle with "X" in it) is located within 90° ± one tie bolt of eccentricity symbol (circle with "X" in it) on rear compressor rear hub.

(7) Install assembled hub and blades with sealing tube into rear compressor rotor. Engage rear of sealing tube with rear hub.

(8) Install a second PWA 9503 aligning bar and tap front hub to seat. Remove aligning bar.

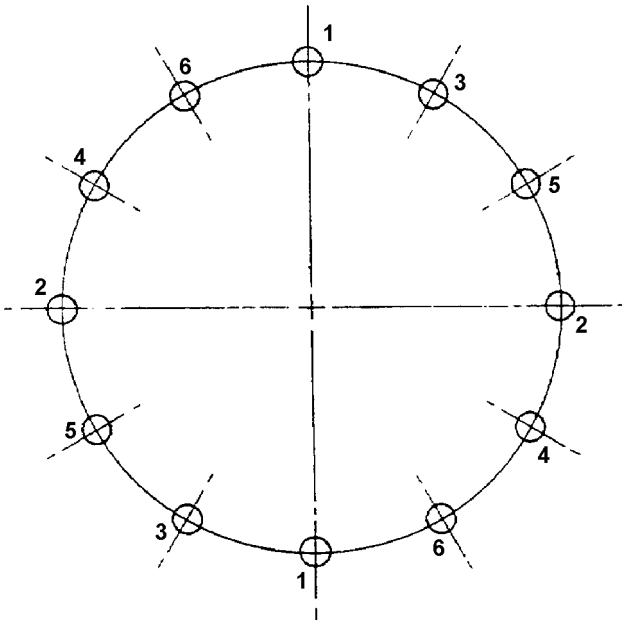

Figure 8. Tie rods, Rear Compressor Rotor – Torquing Sequence

h. Install 6th stage spacer (7, Figure 6) as follows:

CAUTION

Be sure that arrows on tie rod tubes inside spacer are pointing up.

(1) Install spacer (7, Figure 6) on front hub. Space the unbalance marks (Figure 7).

(2) Install a second PWA 9503 aligning bar and tap spacer to seat. Remove second PWA 9503 aligning bar.

i. Install 6th stage stator (6, Figure 6) as follows:

NOTE

Insert end of strap which does not have cotter pin hole in dowel.

(1) Install the three compressor retaining straps (8) at the slotted locations on 6th stage stator.

(2) Install four detail clamps, equally spaced, on top of rear half of balance fixture.

(3) Install 6th stage stator, aligning offset slot and tab and engaging clamps on balance fixture.

(4) Insert dowel pins at lower end of retaining straps into holes in 11th stage stator.

(5) Insert and bend cotter pins (9) to secure straps.

j. Install 6th stage disk and blades (5) as follows:

(1) Install disk and blades on 7th stage spacer. Space the unbalance marks or disk and spacer (Figure 7).

(2) Install a second PWA 9503 aligning bar and tap disk to seat on spacer. Remove second PWA 9503 aligning bar.

k. Install air seal (4, Figure 6) 6th stage disk. Install a second PWA 9503 aligning bar and tap disk to seat. Remove second PWA 9503 aligning bar.

l. Remove PWA 9503 aligning bar from bottom of rotor.

m. Install tie rods as follows:

(1) Chill tie rods (30) in a freezer.

Oil, Lubricating MIL-PRF-23699 1

(2) Lubricate key washer faces (3), thrust washer faces (2) and threads of nuts (1) with MIL–PRF–23699 lubricating oil.

(3) Insert tie rods up through bottom side of rotor.

(4) Install key washers, thrust washers and nuts (1) (fingertight) on tie rods.

n. Torque tie rod nuts as follows:

CAUTION

Align flats on tie rod so that corners do not touch hub at installation as well as before and after torque and stretch.

NOTE

Each pair of tie rods must be tightened simultaneously. This requires two technicians.

(1) Install 12 PWA 9625 tie rod wrenches. Engage large hex wrench with tie rod nut and small hex of wrench with end of tie rod.

NOTE

Throughout the complete torque and stretch procedure, hold square end of tie rods to prevent tie rods from turning while tightening and loosening nuts.

(2) Tighten and torque the tie rod nuts in pairs 180° apart to 100 pound–inches, in the sequence shown in Figure 8.

(3) Further torque the tie rod nuts in pairs in the same sequence to 250 pound inches.

(4) Allow assembly to cool to approximately room temperature before proceeding to next step.

o. Re–torque and stretch tie rod nuts as follows:

CAUTION

Compressor must be at room temperature before retorquing tie rods.

(1) Re–torque all tie rods in pairs, 180° apart, to 250 pound inches. Use pattern of Figure 8.

(2) Place spacer on ring of PWA 9562 stretch gage, then install gage onto front hub.

(3) Insert anvils at bottom of dial indicator through center of PWA 9625 wrenches.

(4) Set dial indicators to zero with anvils touching tie rods.

(5) Loosen two (2) nuts, 180° apart, to zero pound inch.

(6) Re–torque same two (2) nuts to 20 pound inches.

(7) Set indicators to zero and stretch tie rods to 0.032 inch.

(8) Check position of nut flats to keywashers tabs.

(9) Align nuts so that two tabs are on one flat or one tab each on two flats, but do not exceed a stretch of 0.035 inch.

(10) Repeat steps 1 through 4 for the remaining tie rods per the sequence shown in Figure 8.

(11) Recheck and adjust where necessary to insure all tie rods are stretched 0.032 to 0.035 inch.

(12) Remove tooling.

(13) Bend key washer tabs to secure nuts. (QA)

NOTE

- Verify that all tabs of key washer have been bent.
- Verify pre–bent tab has not been sheared or cracked.
- Verify at least one (1) tab has been bent against the part to be locked with 75% width contact and a maximum of 0.020 inch.

15. Rotor and Stator Assembly, Rear Compressor – Axiam Measurement For Build (Table 4)

a. Interpretation of Axiam Measurements

Use Axiam GMS 4060 to determine centerline and biplane deviation of the rear compressor (HPC) components. Axiam measurements shall be interpreted to the 4th (x.xxxx) decimal place for limits that are expressed to the 4th decimal place. Measurements shall be interpreted to the 3rd (x.xxx) decimal place for limits that are expressed to the 3rd decimal place. No rounding is permitted unless otherwise noted.

b. Part Set–up Procedures

NOTE

The parts to be measured should be clean and free of debris prior to measurement. This is particularly critical for surfaces that the probes and chuck jaws contact.

(1) Using an approved marker, in accordance with NA 02–1–517, mark a blue line with the phi symbol (Φ) at the bolt hole closest to the part serial number, on all parts to be measured. This will be the zero reference point and notes the starting point of a measurement run.

(2) Before loading parts onto the table, rotate the table so that the angle indicator on the “Circular Setup Page” is at 0 degrees. Mount the part onto the table forward face down and rotate the part on the chuck jaws so that the bolt hole with the phi mark (Φ) is lined up with the probes at zero, as displayed by the angle indicator.

CAUTION

Care should be taken when loading and unloading parts. Move the probes away from the part to avoid inadvertent bumping of or damage to the probes.

NOTE

It is critical that parts are mounted onto the chuck jaws with the proper face orientation as defined in the part measurement program, (e.g. engine forward face upward – forward up or engine forward face downward – forward down). In general, part orientation is noted on the comment field of the part inspection program for each component of the Module.

(3) Probes must be positioned according to the pre–defined part program. Probe position should be adjusted so that they are in the middle of the range on the probe range display.

(4) Part tilt affects part centering, and therefore, must be removed first. Datum Faces are typically used when removing tilt from the part.

(5) A Datum Diameter is used to center the part, even when there are two (2) diameters defined. If no Datum Diameter is defined, use any suitable diameter.

(6) The probes should be arranged into position according to the requirements of the Part Inspection Program.

c. Component Measurement:

(1) Mount the component to be measured onto the chuck jaws in the orientation specified by the inspection program. Forward up for HPC components.

NOTE

When mounting the spacers onto the chuck jaws do not over tighten the jaws. Leave spacers loose in jaws so as not to distort the spacer during the measurement run

(2) Rotate the table so that the GMS rotary table indicator on the GMS 4060 software “Setup” screen is at 0 degrees.

(3) Load the pre–defined part inspection program.

(4) Enter Part No. and Serial No. for the specific set of parts (referred to as a Module) being measured and stacked by the Axiam System.

(5) Table 4 identifies the probe locations and centerline and biplane deviation limits for each part.

(6) Remove tilt and center the part.

(7) Click on the “Run” button at the bottom of the Setup page. Do not touch the table or the part while the part is being measured.

(8) Upon completion of the “Run” cycle, the Results page will be displayed. The Alternate Results page can be displayed by right clicking on the Results button at the top of the screen.

(9) Graphical interpretations of the results can be viewed by clicking on the “Graphics” button at the top of the screen.

(10) Repeat Steps (1) through (9) for all components.

Table 4. Probe Locations and Limits for Axiam Measurements

COMPONENT	FORWARD SIDE	REAR SIDE (Datums)	CL DEV LIMIT (inches)	BIPLANE DEV LIMIT (inches
7th STAGE DISK (Front Hub) Primary Stack	Journal	Snap Diameter Snap Face	0.0018	N/A
7th STAGE DISK (Front Hub) Secondary Stack	Snap Diameter Snap Face	Snap Diameter Snap Face	0.001	0.005
DISKS 6th thru 12th Stage	Snap Diameter Snap Face	Snap Diameter Snap Face	0.0012	0.0010
Spacers 6th thru 11th Stage	Snap Diameter Snap Face	Snap Diameter Snap Face	0.002	0.002
REAR HUB	Snap Diameter Snap Face	Hub Diameter Rear Face	0.0015	0.0015

NOTE

Two measurement runs of the front hub are required, primary and secondary. For the primary run, use the part inspection program FWDHUBPRM and the setup in Table 4. For the secondary run, use the inspection program FWDHUBSEC and the setup in Table 4. If the forward hub spline eccentricity measurement has not been accomplished or needs to be verified, see NA 02B–10DAD–6–2V3,Hub Assembly, Rear Compressor Rotor, Front WP for procedures.

d. Smart Stack™ of Primary and Secondary Stack.

(1) Open the Smart Stack™ software program by right clicking on the “Options” button at the upper right side of the GMS 4060 Circular Setup Page. Left click on “Smart Stack LPC” to load the Smart Stack™ program.

(2) Right click on the Menu button at the bottom of the Smart Stack™ input page.

(3) Select “Load Program”.

(4) Select J52HPC and load the primary Smart Stack™ programs associated with the J52HPC: HPCPRIM and HPCSEC. The HPC Primary program (HPCPRIM) stacks the compressor components from the rear hub through the 7th stage disk (front hub). The HPC Secondary program (HPCSEC) stacks the compressor components from the 7th stage to the 6th stage disk.

(5) Identify the stack module by inputting a Part # and Serial #. The Stack program is now capable of receiving data from the measurement runs by one of the following methods:

(a) Method A: Key in the data for each stage via the keyboard or;

(b) Method B:
• Click on Menu and then select Load Smart Stack Data.
• Open the list of directories in Smart Stack™ and click on ”J52HPC”.
• Select the matching Part # from the list.
• Select the matching Serial #.
• Select the matching time from the list on the printout of the measurement run. This will load the selected data file into the chosen stage of the Smart Stack™ program.
• Repeat this process until all of the parts of this module are loaded into the program.
• After all of the components for the module are loaded into the Smart Stack™ Program click on the Calc. Button to run the calculation of the Stack and display the results.

(6) Review Smart Stack™ Results:

NOTE

After pressing the “Calc” Button, the Smart Stack™ results pages will be displayed. Be sure to print results before saving. Results will reset to zero after saving.

(a) Review the data. Note all large numbers and check tolerance limits. If a particular part is out of tolerance or the cumulative centerline deviation is excessive, it may be necessary to re–machine or replace a problem part. If so, measure reconditioned or new parts and insert data into the stack plan.

(b) Save stack module by clicking on Menu and then #5, Save Stack Data. The file tree structure will save the module by Directory, Program, Part # and Serial #.

16. Rotor and Stator Assembly, Rear Compressor – Recording Disk and Spacer Snap Fits (Table 5)

a. Disk and spacer snap dimensions have been recorded on their respective work documents. New parts may not have a recorded dimension. Snap dimensions for these parts must be determined for fit requirements. Record snap dimensions in appropriate locations in Table 5.

b. Subtract outside snap diameters from mating inside diameter snaps. Record this as the snap fit. Identify the result as negative or positive using the appropriate symbol (±).

Table 5. Snap Fit Worksheet

J52-P-408A/B **Serial No._____Part No._____**

Rear Compressor Disk and Spacer Snap Fit Worksheet

		Snap	Fit (ID-OD)	Limits	Date	Artisan
Disk 6	Rear ID					
Spacer 6	Front OD			0.008T - 0.000		see “Note”
	Rear OD					
Disk 7	Front ID			0.009T - 0.000		see “Note”
	Rear ID					
Spacer 7	Front OD			0.009T - 0.000		see “Note”
	Rear OD					
Disk 8	Front ID			0.007T - 0.000		see “Note”
	Rear ID					
Spacer 8	Front OD			0.007T - 0.000		see “Note”
	Rear OD					
Disk 9	Front ID			0.006T - 0.000		see “Note”
	Rear ID					
Spacer 9	Front OD			0.006T - 0.000		see “Note”
	Rear OD					
Disk 10	Front ID			0.006T - 0.000		see “Note”
	Rear ID					
Spacer 10	Front OD			0.0074T - 0.000T		see “Note”
	Rear OD					
Disk 11	Front ID			0.0065T - 0.000		see “Note”
	Rear ID					
Spacer 11	Front OD			0.007T - 0.000		see “Note”
	Rear OD					
Disk 12	Front ID			0.006T - 0.000		see “Note”
	Rear ID					
Rear Hub	Front OD			0.004T - 0.000		see “Note”
PN 2187175	Front OD			0.008T - 0.001T		see “Note”

NOTE

All measurements have been transcribed from original work documents for these calculations.
ARTISAN _____

17. Rotor and Stator Assembly, Rear Compressor – Axiam Build and Verification (Figure 6, Figure 8)

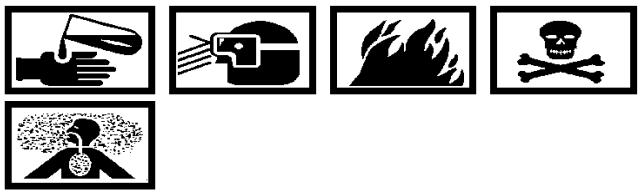

Alcohol, Isopropyl TT–I–735 59

a. Clean all mating surfaces by wiping with lint free cloth and isopropyl alcohol (Scotchbrite may be necessary for dirt build–up). Be sure all disk bolt hole surfaces and snap diameters, all spacer diameters and surfaces and the rear compressor rotor rear hub flange and outside diameter are cleaned in this manner.

b. Stack the spacers in reverse order, i.e. 6–7 stage spacer at bottom and the 11–12 stage spacer at top.

c. With stator assemblies stacked and aligned, mark a blue index line over the outside of each stator aligned with the 12 o'clock position on the 6th stage stator, identified by the offset hole.

d. Separate the stator vane assemblies and stack in reverse order and locate near the assembly.

e. Chill the tie rods (30, Figure 6) in freezer.

Molybdenum Disulfide Lubricant MIL–M–7866 71

Oil, Lubricating MIL-PRF-23699 1

f. Mix a compound of 10% MIL–M–7866 molybdenum disulfide and 90% MIL–PRF–23699 engine oil. Apply a thin coat to the lock tab area at the forward end and the threaded area at the rear of the oil sealing tube.

g. Install rings (11) and expanders (12) into groove at front of sealing tube. Assemble them so that ring gaps are staggered more than 90 degrees and expander gaps are approximately opposite.

h. Install a hose clamp around rings and expanders. Tighten clamp to close gaps on rings and expanders to permit installation of tube into front hub.

i. Lubricate thrust washers (2), and nut threads (1) with MIL–PRF–23699 engine oil.

j. Mark the Stack Line.

(1) View the Smart Stack™ results (primary and secondary) and identify each component on the results page. Note the associated bolt hole number.

(2) Taking one component at a time, orientated forward up, count clock–wise from the reference (Φ) phi mark, the number of bolt holes for that part from the Smart Stack™ results page. Using an approved blue marker in accordance with NA 02–1–517, mark "SL" at this bolt hole to designate the stack line. Mark the stack line on all of the components.

WARNING

Wear protective gloves when handling disk (or hub) and blade assemblies. These assemblies are hot and blades have sharp edges which could cause personal injury.

NOTE

IMPORTANT: Since the secondary stack starts at the end of the primary stack, the primary stack bolt hole position for the Front Hub must be manually added to the secondary stack results. Example: If the Front hub stack line is the No. 6 bolt hole, and the 6th stage spacer stack line is the No. 5 bolt hole, the resulting stack line for the 6th stage spacer will be the No. 11 bolt hole.

k. Stack all the disks in reverse order in an oven and heat parts at 380°–400° F for 20– 25 minutes

l. Install the alignment rod through the bottom plate of the the GMS–4060–HPC–001/2 build fixture and secure in place. Align the zero mark of the Rear Hub over the alignment rod and lower in place ensuring it is properly seated on build fixture.

m. Install the 12th stage disk on the rear hub indexing the stack line on the alignment rod at the zero position of the rear hub.

n. Install a PWA 9503 aligning bar through the disk into the Hub. Ensure PWA 9503 aligning bar moves freely through tie rod holes prior to proceeding. Remove the PWA 9503 aligning bar.

CAUTION

Be sure that arrows on tie rod tubes inside spacer are pointing up.

o. Install 11th stage spacer on disk, aligning stack line on the alignment rod at the zero position of the rear hub. Install a PWA 9503 aligning bar. Ensure PWA 9503 aligning bar moves freely through tie rod holes prior to proceeding. Remove the PWA 9503 aligning bar.

p. Install the 11th stage stator assembly over the disk and spacer. Seat the rear flange of stator on the four support blocks on the build fixture.

q. Repeat steps m–p for the 11th through the 8th stage disk and blade assemblies, 10th through 7th stage stator assemblies and 10th through 7th stage spacers. Observe the following requirements:

(1) Ensure arrows on tie rod tubes inside spacers point up.

(2) Ensure all stack lines are aligned over the alignment rod at the zero position of the rear hub.

(3) Align offset slots and tabs on stator flanges.

(4) Ensure each stator is fully seated. This will require the use of a mallet to tap each stator in place.

(5) Ensure that PWA 9503 aligning rods move freely through tie rod holes at each stage of assembly prior to continuing assembly.

r. Install sealing tube (13, Figure 6) into rear side of front hub and blades. Loosen and remove hose clamp as seal rings go into hub assembly.

s. Ensure sealing tube turns freely inside hub

t. Install assembled front hub, blades and sealing tube into rotor aligning the rear of sealing tube with rear hub. Install a PWA 9503 aligning rod through top of front hub into 8th stage spacer and disk 180 degrees from fixture alignment rod and drop hub into place.

u. Install 6th stage spacer (7) on disk aligning stack line on the alignment rod at the zero position of the rear hub. Install a PWA 9503 aligning bar. Ensure PWA 9503 aligning bar moves freely through tie rod holes prior to proceeding. Remove the PWA 9503 aligning bar.

v. Install 6th stage stator (6).

w. Install the three compressor retaining straps (8) at the dowel pin hole locations, aligning tab locations with slots in 7th stage stator and tap into place.

x. Insert dowel pins (large pin without cotter pin hole) at end of straps into holes in the 6th stage stator. Ensure opposite end of strap dowel pin will insert into 11th stage stator.

y. Install six detail clamps on top ring of build fixture and secure stator to fixture.

z. Install the 6th stage disk and blades on the 6th stage spacer indexing the stack line on the alignment rod at the zero position of the rear hub.

aa. Install air seal (4) onto the 6th stage disk and bade assembly.

ab. Insert PWA 9503 aligning rods through assembly insuring they travel freely. Install the build fixture top plate. Engage the three compression rods and lock nuts with the fixture top plate and finger tighten.

ac. Apply 600 to 700 pounds per square inch hydraulic load via the hydraulic hand pump. The alignment rods may be removed after the hydraulic load is applied.

ad. Install chilled tie rods by inserting them up through bottom side of rotor assembly.

NOTE

It will be necessary to remove the fixture alignment rod and rotate the build fixture to accommodate the installation off all 12 tie rods.

ae. Install key washers, thrust washers and nuts on tie rods. Nuts should be finger tight. Ensure flange on bottom side of nut is centered in thrust washer and key washers.

af. Install two PWA 9625 tie rod wrenches. Engage large hex wrench end with tie rod nut and small box end of wrench with end of tie rod.

NOTE

Each pair of tie rods must be tightened simultaneously. This requires two artisans.

ag. Holding the top of the PWA 9625 Tie rod wrenches stationary to prevent tie rod from twisting, torque all tie rod nuts in pairs, 180 degrees apart, to 250 pound–inches, using the torque pattern in Figure 8.

ah. Release hydraulic pressure and remove compression rods and fixture top plate.

ai. Allow assembly temperatures to equalize. (Approx one (1) hour with forced convection through assembly)

CAUTION

Compressor must be at room temperature before stretching tie rods.

aj. Stretch the tie rods per the following:

(1) Install 12 PWA 9625 wrenches onto tie rods.

(2) Install PWA 9562 stretch gage onto front hub.

(3) Insert anvils at bottom of dial indicator through center of PWA 9625 wrenches with anvils touching tie rods.

(4) Loosen nuts in pairs, 180 degrees apart to zero torque.

(5) Torque all tie rods in pairs, 180 degrees apart, to 20 pound–inches, using the torque pattern (Figure 8).

(6) Set dial indicators to zero.

(7) Tighten nuts in pairs, 180 degrees apart, to obtain 0.032–0.035 inch tie rod stretch. Repeat for all tie rods using pattern in accordance with Figure 8.

(8) Remove tooling.

ak. Bend lock tabs against flats of nuts.

al. Verify the build using the Axiam GMS.

(1) Load the measurement program HPCFULRTR and enter Part # and Serial # for the module being measured.

(2) Mount the module onto the chuck jaws forward up.

(3) Align the (Φ) phi mark on the rear hub with table zero.

(4) Place datum probes on the front hub journal diameter. Place other probes on rear hub diameter and rear face as described by the program.

(5) Level and center the module to within +/– .001 inches.

(6) Run the program and print final results. Maintain printed results with rotor paperwork.

(7) Reject rotor if final verification centerline deviation exceeds 0.003 inch. This measurement shall be expressed to the 3rd decimal place after rounding to the nearest thousands (e.g., 0.0035 = 0.004).

am. Ensure rotor zero reference point phi symbol (Φ) has been marked on rear hub and continue with compressor assembly build.

an. Remove compressor assembly from build fixture.

ao. Insert and bend cotter pins (9, Figure 6) to secure straps.

18. Rotor and Stator Assembly , Rear Compressor – Dynamic Balancing (Figure 9, Figure 10, Figure 11, Figure 12 and Table 6)

a. Remove transport cover and attach lift adapter assembly (P/N P–8192–A) to rear compressor rear hub.

b. Using an overhead hoist, remove the rear compressor assembly from the transportation dolly and install it on the work cart ensuring it is properly seated on axial locator ring.

c. Remove lift adapter assembly.

d. Extend the 0° mark upward to the top of the rear hub.

e. Using an overhead hoist with three point lifting sling (P/N B–35995–1) attached to three eyebolts on aft frame weldment, lift the aft frame weldment and position aft frame weldment over rear compressor assembly. (Figure 11)

CAUTION

To prevent damage to 12th stage compressor blades carefully lower, guide, and properly align aft frame weldment onto Rear Compressor Assembly

f. Carefully lower aft frame weldment onto rear compressor section. Ensure that aft frame weldment is properly positioned on stator case so that the aft frame weldment alignment ring is properly seated all the way around the stator case.

g. Install four stator case clamps and secure each with hand knob. Reposition aft frame weldment on stator case as necessary to properly position and engage stator case clamps. Hand–tighten hand knobs to secure stator case clamps.

h. Disconnect three point lifting sling from three eyebolts on aft frame weldment

CAUTION

Improperly heating slave race can distort or deform slave race and render it unserviceable. To prevent damage to the slave race never heat slave race with a torch or other open flame. Always heat slave races in an approved oven.

WARNING

Handling heated component can cause severe burns. Wear approved protective clothing, eyewear, and gloves when handling and assembling hot components.

i. Heat aft slave race/pulley (P/N D–35954) at 280° F (138° C) for 15 minutes in an approved oven.

j. Remove aft slave race/pulley from oven and install on aft end of rear compressor assembly shaft with larger diameter pulley end up. Ensure that 0° reference mark on aft slave race/pulley is aligned with 0° reference mark on rear compressor assembly.

k. While aft slave race/pulley is still hot, install aft retention nut (P/N C–35953–1) so the retention nut is snug and slave race/pulley is bottomed on aft end of rear compressor assembly shaft.

l. Allow aft slave race/pulley and aft retention nut to cool below 100º F (38° C) before proceeding.

m. Torque aft retention nut to 1500 to 1800 in–lbs.

n. Position aft locking ring over aft slave race/pulley and align with saddle insert.

o. Secure aft locking ring to saddle insert with two cap screws and washers.

p. Attach lifting beam assembly (P/N E–35851–1) and hoist aft frame weldment and rear compressor assembly above cart assembly. Remove axial locator ring and plate. Orient aft frame weldment so that saddle insert is down. Lower aft frame weldment and rear compressor assembly until properly seated on cart assembly.

q. Mark 0° reference line on front hub, ensuring aft reference 0° and forward 0° reference marks are aligned.

CAUTION

Improperly heating slave race can distort or deform slave race and render it unserviceable. To prevent damage to the slave race never heat slave race with a torch or other open flame always heat slave race in an approved oven.

WARNING

Handling heated component can cause severe burns. Wear approved protective clothing, eyewear, and gloves when handling and assembling hot components.

r. Heat forward slave race (P/N D–36000–1) at 280º F (138° C) for 15 minutes in an approved oven. (Figure 11)

s. Remove forward slave race from oven and install on forward end of rear compressor assembly shaft. Ensure that 0° reference mark on forward slave race is aligned with 0° reference mark on rear compressor assembly.

t. Install a red protector table over the 6th stage stator and allow forward slave race to cool to below 100° F (38° C) before proceeding.

CAUTION

To prevent damage to safety clips on lifting hooks, position three lifting hooks through lifting eyebolts so that open end of lifting hooks and safety clips are positioned toward outboard edge of forward frame weldment.

u. Lift and position forward frame weldment assembly over aft frame weldment and rear compressor assembly.

v. Carefully lower forward frame weldment onto aft frame weldment, ensuring it is not completely down so that saddle supports are oriented in the same direction.

NOTE

Four of the cap screws that secure forward frame weldment to aft frame weldment can be loosely install to assist in final alignment of the forward frame weldment with aft frame weldment.

w. Loosely install remainder of cap screws that secure forward frame weldment to aft frame weldment.

x. Equally tighten 12 cap screws to secure aft frame weldment to forward frame weldment.

y. At drive control panel, ensure that balancing machine main power switch is set to on position at least 15 minutes.

NOTE

Apply Lubricating Oil MIL–PRF–23699 on O–ring around both forward and aft end caps.

z. Orient forward and aft frame assembly (P/N E–35997–1) horizontal so that rear compressor assembly is sitting on the support rollers.

aa. Hoist forward and aft frame weldment assembly with rear compressor assembly off of cart assembly and install aft end cap (P/N D–36059–1) with steel ball at the aft end of rear compressor assembly aligning 0° marks. Install forward end cap (P/N D–36001–1) with Steel ball at forward end of rear compressor assembly, aligning 0° mark. (Figure 12)

ab. Position forward and aft frame assembly with rear compressor assembly onto balancing machine. Adjust machine supports as necessary so that saddle inserts properly align with and set into machine support saddles. (Figure 12)

ac. Remove two cap screws, washers and aft locking ring (P/N E–35996) from the saddle insert.

ad. At each machine support saddle, secure forward and aft frame weldment in balancing machine with two saddle insert retaining clips and cap screws. Disconnect lifting beam assembly from frame weldment and move clear of balance machine area.

ae. Position drive belt over aft slave race/ pulley and apply belt tension four turns on belt tensioner.

af. Position negative load bearing to forward slave race and tighten.

ag. At each machine support assembly forward and aft, position and secure axial thrust bearings against steel ball.

ah. Position photo cell on aft slave race.

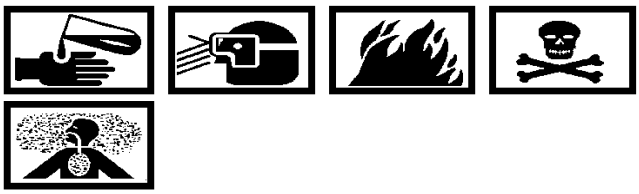

Oil, Lubricating MIL-PRF-23699 1

ai. Apply Lubricating oil MIL–PRF– 23699 on all support rollers.

aj. Ensure that all debris and tools are removed from balancing machine area.

ak. On CAB 690 screen setup per operating instructions.

al. Start the balance machine and accelerate from 0 to 900 RPM in less than 15 seconds.

am. Check initial unbalance in Plane X and Y at 900 RPM minimum. (Figure 10) Initial unbalance must not be more than 4.00 ounce–inches. If initial unbalance is more than 4.00 ounce–inches disassemble the rotor and stator to determine cause. Release saddle locks prior to recording unbalance readings. Saddle locks are locked for loading and unloading the work piece in the balance machine.

NOTE

The initial combination of four counterweights must be installed within 60 degrees on either side of unbalance vector. If the two extra smaller counterweights are used, they may be installed at any location. This requirement applies to both planes X and Y.

an. Correct any unbalance in Planes X and Y by adding counterweights (1, 3, 4 and 6) and rivets (2 and 5) as listed. (Figure 9 or 10) Temporarily secure counterweights with Scotch No. 200 masking tape or equivalent.

ao. Residual unbalance in Planes X and Y after counterweights have been added must not be more than 0.10 ounce–inches. (Table 6)

ap. At forward end of front compressor assembly, reposition axial thrust stop down and away from the end cap and steel ball.

aq. Reposition negative load bearing away from the Forward slave race.

ar. At the balancing machine, release drive belt tension and remove drive belt from aft slave race/pulley.

as. Reposition Photo Cell away from aft slave race/pulley and Install aft locking ring on slave race/pulley.

at. At both forward and aft ends of rear compressor assembly remove four screws and retaining clips from the Saddle support. Ensure saddle locks are locked prior to removing work piece.

au. Remove forward and aft frame weldment with rear compressor assembly from balancing machine.

av. Remove both forward and aft end caps.

aw. Place forward and aft frame weldment assembly with rear compressor on a cart assembly with forward side up.

ax. Loosen and remove bolts around forward weldment and place two bolts in jacking holes located on the forward weldment. Tighten equally until forward weldment is separated from aft weldment.

ay. Hoist and position forward frame weldment assembly onto a cart and remove two bolts from jacking location on the forward weldment.

az. Remove forward slave race using hydraulic slave race puller (P/N E–35998–1) as follows:

(1) Position two halves of forward draw sleeve on aft slave race and slightly loosen four retaining bolts.

(2) Attach forward pusher to cylinder and position cylinder on 2 halves of draw sleeve.

(3) Hand–tighten four retaining bolts to secure cylinder.

(4) At hand pump, close pressure relief valve and actuate hand pump.

(5) When forward slave race is freed, remove cylinder, forward draw sleeve halves and forward slave race as an assembly from front compressor assembly.

(6) Loosen four retaining bolts and separate cylinder aft draw sleeve halves, pusher, and forward slave race.

ba. Secure the weights by using flaring tool to flare the rivets, clean and remove tape and mark the position.

bb. Mark location of counterweights

bc. Lift aft frame weldment and rear compressor assembly above cart assembly and invert aft frame weldment and rear compressor so that aft slave race/pulley is up.

bd. Place axial locator ring on cart assembly and lower aft frame weldment with rear compressor onto cart assembly until properly seated.

be. Remove aft retention nut that secures aft slave race/pulley.

bf. Remove aft locking ring from saddle insert and aft slave race.

bg. Remove aft slave race using hydraulic slave race puller (P/N C–36037–1) as follows:

(1) Position two halves of forward draw sleeve on aft slave race and slightly loosen four retaining bolts.

(2) Attach forward pusher to cylinder and position cylinder on 2 halves of draw sleeve.

(3) Hand–tighten four retaining bolts to secure cylinder.

(4) Close pressure relief valve on hand pump and actuate the pump.

(5) When forward slave race is freed, remove cylinder, forward draw sleeve halves and forward slave race as an assembly from the front compressor assembly.

(6) Loosen four retaining bolts and separate cylinder aft draw sleeve halves, pusher and forward slave race.

bh. Remove four stator case clamps from aft frame weldment.

bi. Lift the aft frame weldment away from the rear compressor assembly and place on a cart.

bj. Secure the weights by using flaring tool to flare the rivets. Clean, remove tape and mark the rivet positions.

bk. Attach lift adapter assembly to rear compressor assembly and lift the rear compressor away from assembly cart and place on a transportation cart.

bl. Remove lift adapter assembly and place a transportation cover over the rear compressor assembly and wrap the Hub Spline with paper and masking tape. Place a small net over the covered Spline.

19. ANNOTATE N2 AXIAM BUILD ON ASSEMBLY SERVICE RECORD CARD.

a. Annotate on N2 Compressor Rotor Assembly Service Record card, Section II, Part E: Axiam Build Shaftmate data, Perpendicular Plane Deviation, Prependicular Plane Angle

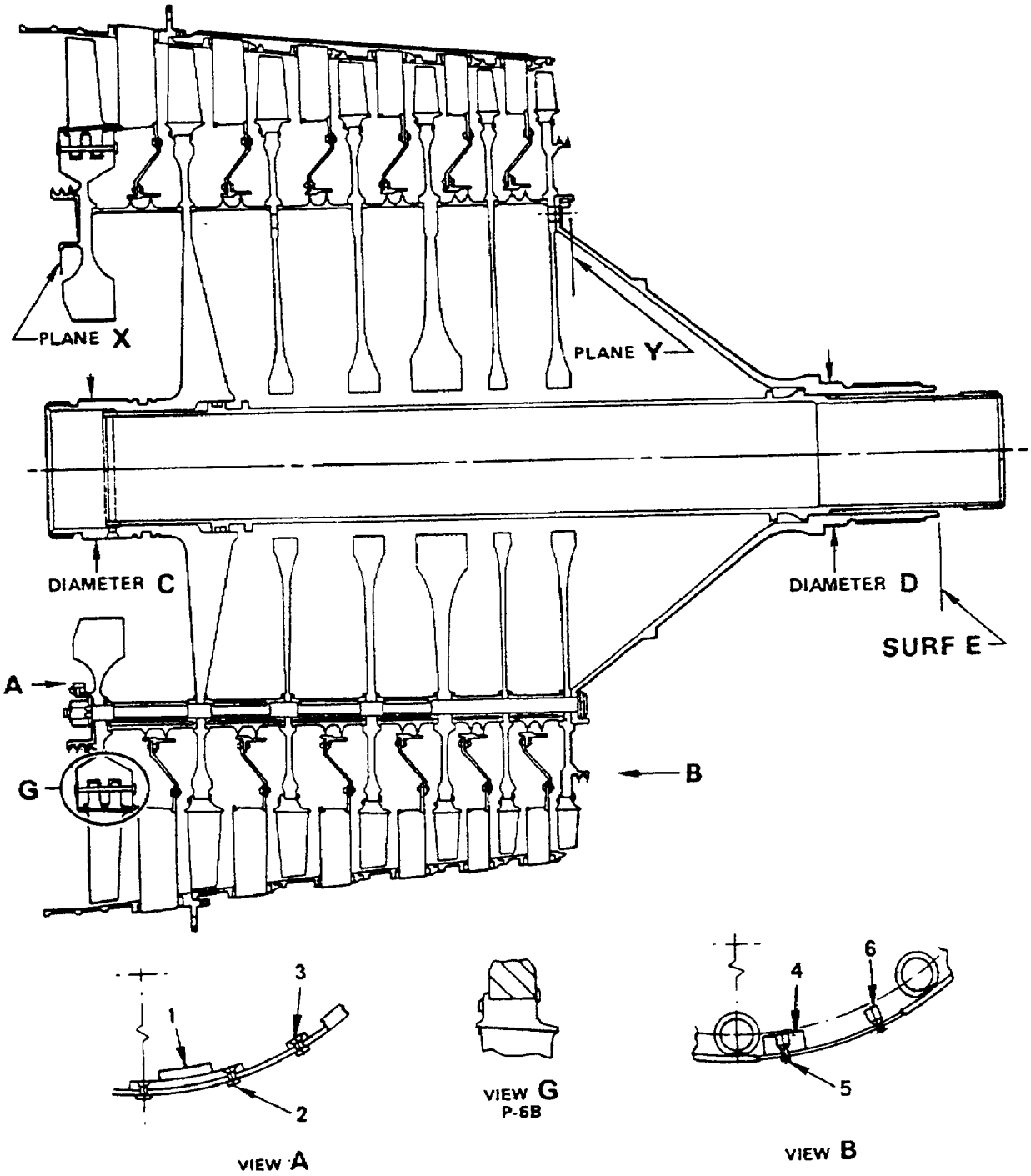

1. P/N 528446 COUNTERWEIGHT (TABLE 6)
2. P/N 534494 RIVET
3. P/N 528445 COUNTERWEIGHT (TABLE 6)
4. P/N 541157 COUNTERWEIGHT (TABLE 6)
5. P/N 534494 RIVET
6. P/N 541156 COUNTERWEIGHT (TABLE 6)

NOTE

BALANCE WEIGHT CONFIGURATION IS USED ON 6TH STAGE DISK P/N 489306 AND REAR HUB P/N 2186229 or P/N 499087

Figure 9. Rotor and Stator Assembly, Rear Compressor – Dynamic Balancing

Table 6. Counterweights, Rear Compressor Rotor

Location	P/N	Application
6th Stage Disk P/N 489306	528445 528446	Counterweights must be installed within ±60 degrees of unbalance vector in one of the following combinations: • 0–4 of P/N 528445 (Select class 1 through 7) or • 0–4 of P/N 528446 (Select class 1 through 18) or • Combination of P/N 528445 and P/N 528446 (maximum of four, both P/N's combined) **NOTE** After adding counterweights within ±60 degrees of unbalance vector, two more P/N 528445 counterweights may be used for fine balance anywhere on the balancing flange.
6th–Stage Disk P/N 2189806	534493 2196853 2196855	Counter weights P/N 534493, 2196853 and 2196855 may be used in any combination to balance assembly. A maximum of four counterweights may be installed anywhere on plane X to correct residual unbalance.
Rear Hub P/N 2186229 P/N 499087	541156 541157	Counterweights must be installed within ±60 degrees of unbalance vector in one of the following combinations: • 0–4 of P/N 541156 (Select class as required) or • 0–4 of P/N 541157 (Select class as required) or • Combination of P/N 541156 and 541157 (maximum of four, both P/N's combined) • 0–4 of P/N 534493 (Select class 1, 2 or 3) **NOTE** Two more P/N 541156 counterweights may be used for fine balance anywhere on the balancing flange.
Rear Hub P/N 2187175	534493 2196853 2196855	Counterweights P/N 534493, 2196853 and 2196855 may be used in any combination to balance assembly. A maximum of four counterweights may be installed anywhere on plane Y to correct residual unbalance.

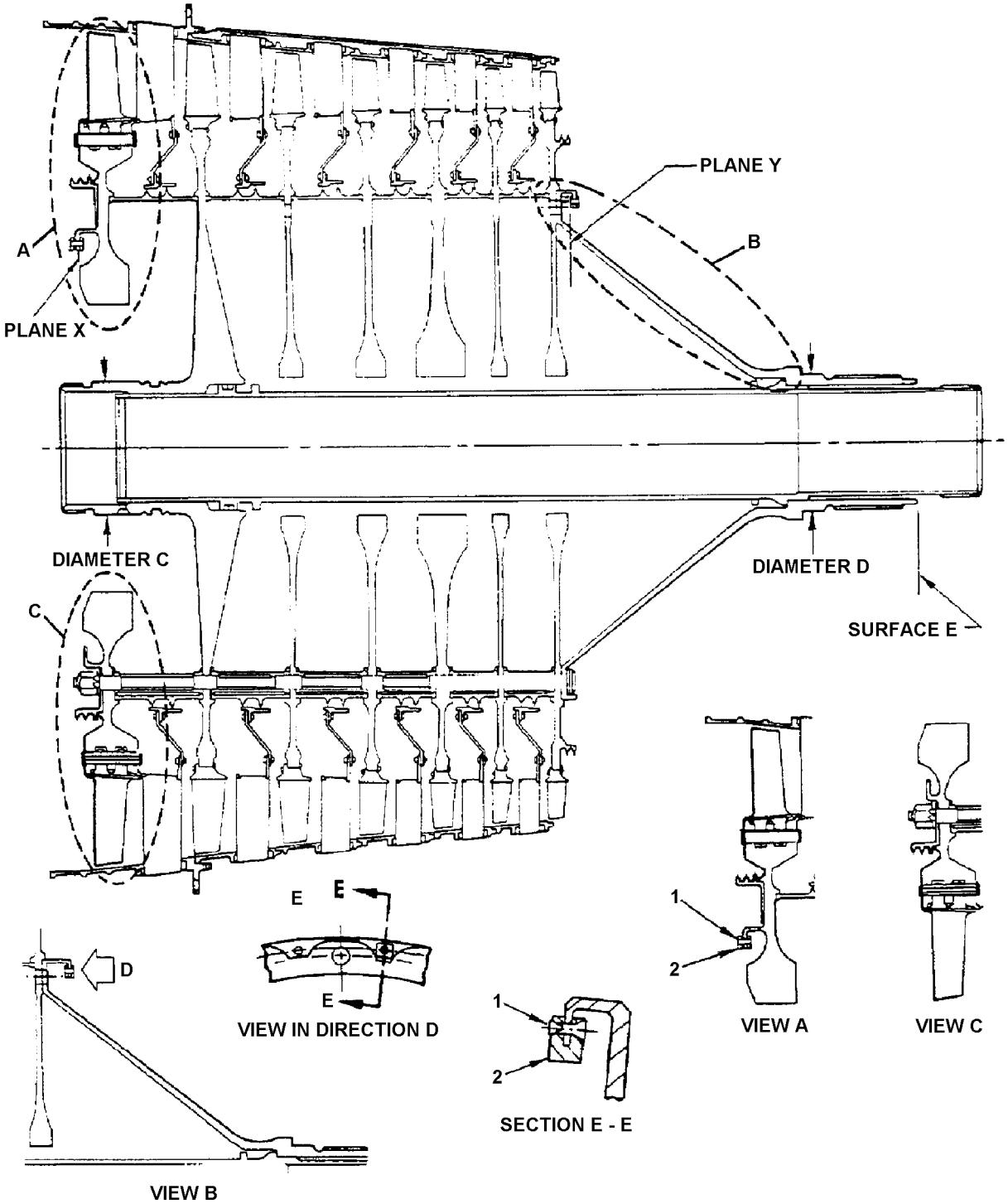

1. P/N 2196854 RIVET
2. P/N 2196855 COUNTERWEIGHT

NOTE

BALANCE WEIGHT CONFIGURATION IS USED ON 6TH STAGE DISK P/N 2189806 AND REAR HUB P/N 2187175 WITH ACCEPTABLE SADDLE STYLE WEIGHTS

Figure 10. Rotor and Stator Assembly, Rear Compressor – Dynamic Balancing (P/N 2191677)

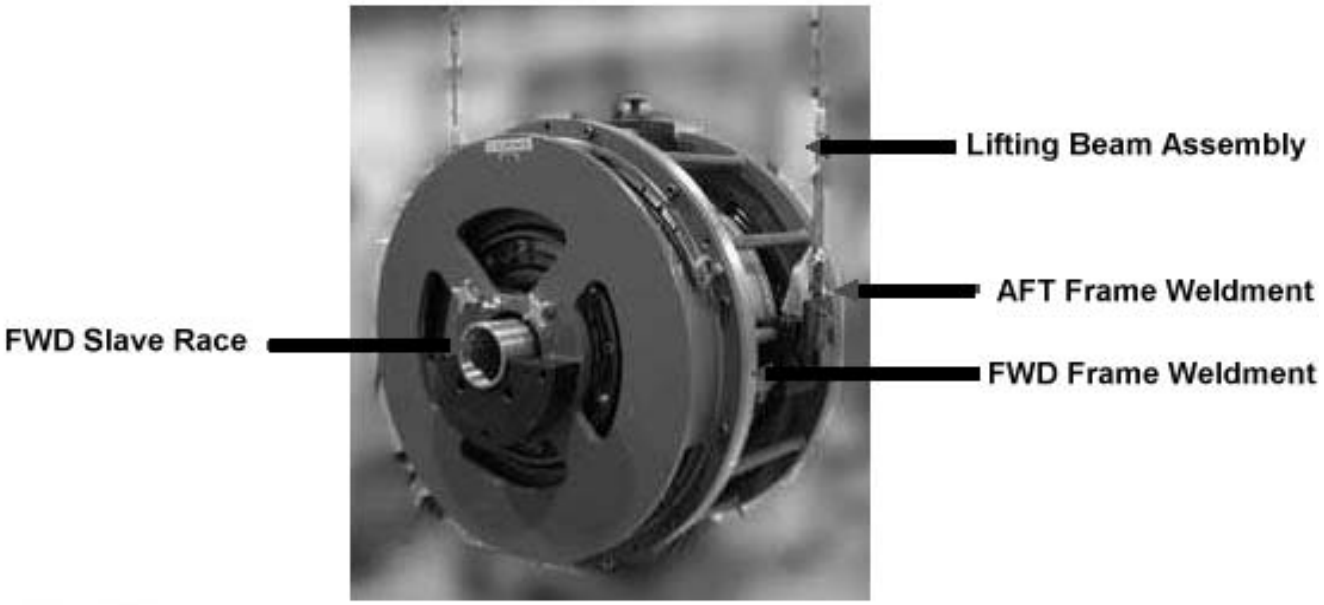

Figure 11. Assembled Rear Compressor in Balance Fixture

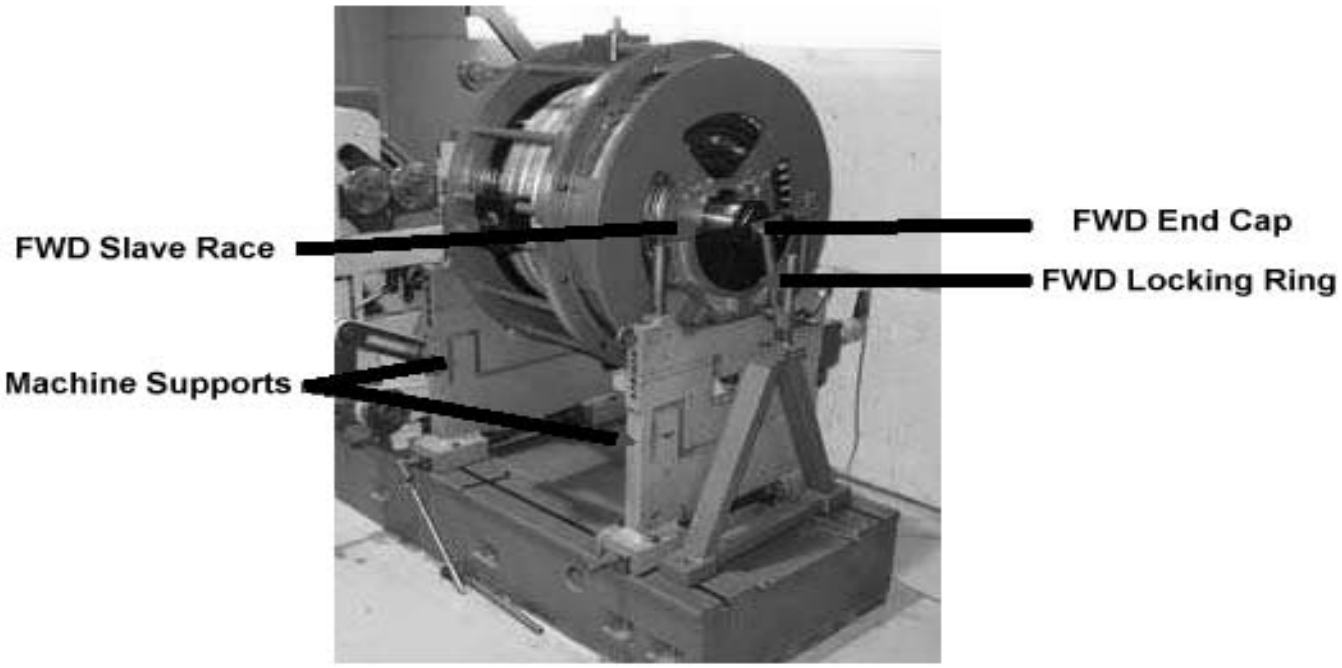

Figure 12. Frame Assembly in Balancing Machine