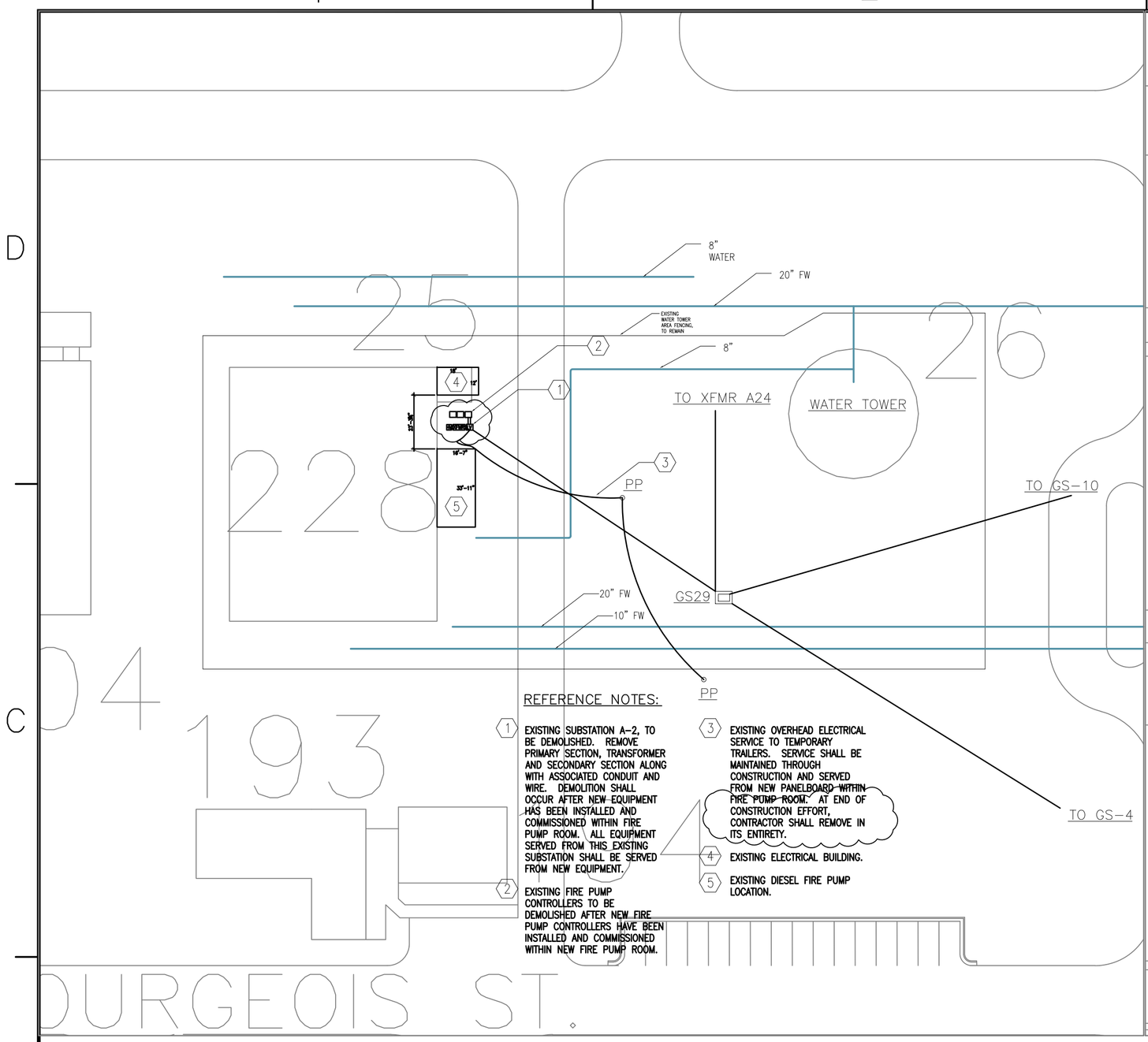

REFERENCE NOTES:

1. EXISTING SUBSTATION A-2, TO BE DEMOLISHED. REMOVE PRIMARY SECTION, TRANSFORMER AND SECONDARY SECTION ALONG WITH ASSOCIATED CONDUIT AND WIRE. DEMOLITION SHALL OCCUR AFTER NEW EQUIPMENT HAS BEEN INSTALLED AND COMMISSIONED WITHIN FIRE PUMP ROOM. ALL EQUIPMENT SERVED FROM THIS EXISTING SUBSTATION SHALL BE SERVED FROM NEW EQUIPMENT.
2. EXISTING FIRE PUMP CONTROLLERS TO BE DEMOLISHED AFTER NEW FIRE PUMP CONTROLLERS HAVE BEEN INSTALLED AND COMMISSIONED WITHIN NEW FIRE PUMP ROOM.
3. EXISTING OVERHEAD ELECTRICAL SERVICE TO TEMPORARY TRAILERS. SERVICE SHALL BE MAINTAINED THROUGH CONSTRUCTION AND SERVED FROM NEW PANELBOARD WITHIN FIRE PUMP ROOM. AT END OF CONSTRUCTION EFFORT, CONTRACTOR SHALL REMOVE IN ITS ENTIRETY.
4. EXISTING ELECTRICAL BUILDING.
5. EXISTING DIESEL FIRE PUMP LOCATION.

A ELECTRICAL DEMOLITION PLAN

Scale: 1:40

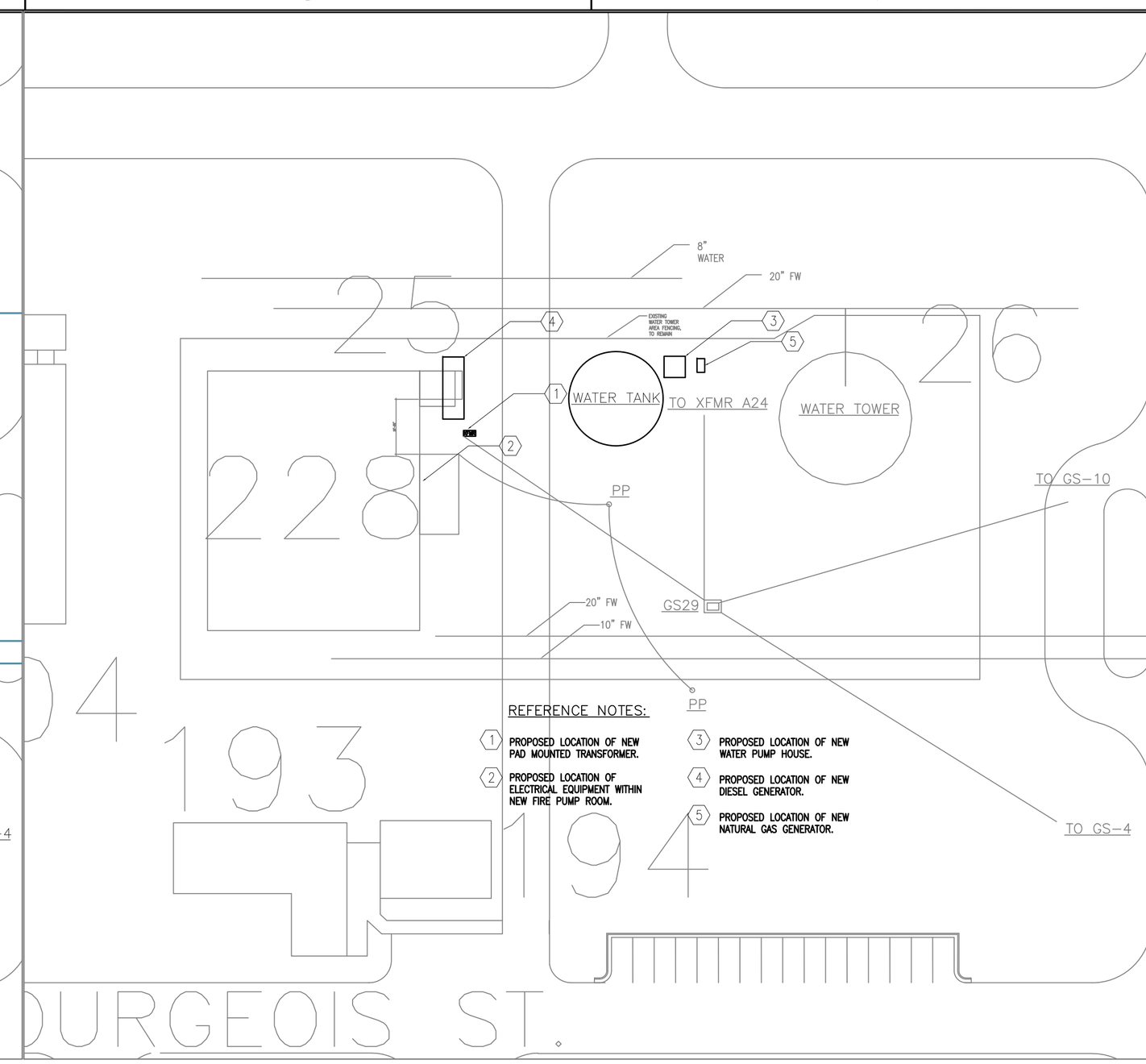

REFERENCE NOTES:

1. PROPOSED LOCATION OF NEW PAD MOUNTED TRANSFORMER.
2. PROPOSED LOCATION OF ELECTRICAL EQUIPMENT WITHIN NEW FIRE PUMP ROOM.
3. PROPOSED LOCATION OF NEW WATER PUMP HOUSE.
4. PROPOSED LOCATION OF NEW DIESEL GENERATOR.
5. PROPOSED LOCATION OF NEW NATURAL GAS GENERATOR.

B ELECTRICAL SITE PLAN

Scale: 1:40

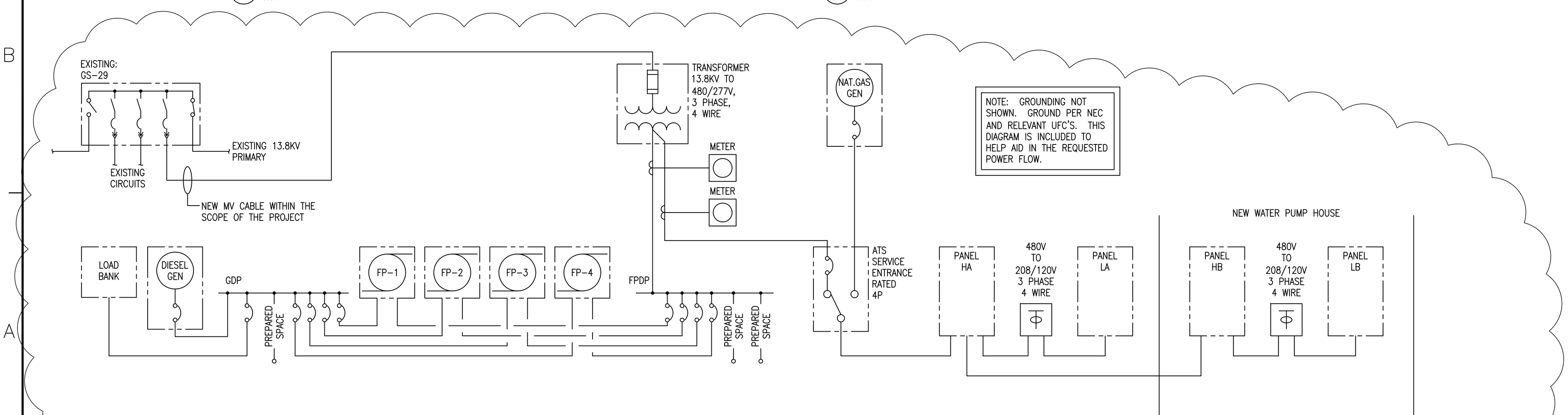

C PROPOSED NEW POWER RISER DIAGRAM

Scale: NO SCALE

GENERAL SHEET NOTES

DEMOLITION

1. AS-BUILT DRAWINGS MAY CONFLICT WITH SURVEY DRAWINGS. HAND DIG IN AREAS WHERE UNDERGROUND MEDIUM VOLTAGE CABLE MAY BE PRESENT. GROUND PENETRATING RADAR MAY NOT DETECT CABLE.
2. REFER TO SITE PHOTOS FOR CURRENT CONDITION OF SITE AND ELECTRICAL BUILDING 25.

SYM	DESCRIPTION	DATE	APPR

NAVFAC

PRELIMINARY NOT FOR CONSTRUCTION

SEAL

A/E INFO

APPROVED

FOR COMMANDER NAVFAC

ACTIVITY

SATISFACTORY TO DATE

DES TLS DRW TLS CHK RC

JOANNE DIZ, PE

ANTHONY DIGANTO, PE

RAYMOND CHURCH, PE

DEPARTMENT OF THE NAVY
NAVAL FACILITIES ENGINEERING COMMAND
IPT SOUTH CENTRAL

NAVAL FACILITIES ENGINEERING COMMAND SOUTHEAST
NAVAL AIR STATION JACKSONVILLE

NAVAL AIR STATION JFB NEW ORLEANS
BELLE CHASSE, LA

WATER DISTRIBUTION REPAIRS

ELECTRICAL CONCEPT PLANS AND RISER

SCALE: 1" = 40'

EPROJECT NO.:

CONSTR. CONTR. NO.
N69450-xx-E-xxxx

NAVFAC DRAWING NO.
N/A

SHEET 002 OF 002

E100

DRAWFORM REVISION: 5 APRIL 2012

PLAN NORTH

FILE NAME: C:\Users\suku.bosksran\Desktop\Projects\NOLA Water Distribution Systems Repairs (Fire Pumps)\7-8-2015 E100 REV 1.dwg LAYOUT NAME: NAVFAC D Size Sheet PLOTTED: Friday, July 17, 2015 - 9:09am USER: suku.bosksran

SHEET FORMAT IS 22" X 34". IF PRINTED SHEET IS NOT 22" X 34", THEN IT IS NOT TO SCALE