REQUEST FOR QUOTATIONS *(THIS IS NOT AN ORDER)*	THIS RFQ [X] IS [ ] IS NOT A SMALL BUSINESS SET-ASIDE	PAGE 1 OF PAGES 48

1. REQUEST NO.	2. DATE ISSUED	3. REQUISITION/PURCHASE REQUEST NO.	4. CERT. FOR NAT. DEF. UNDER BDSA REG. 2 AND/OR DMS REG. 1	RATING
N69450-16-Q-3226	23-Mar-2016			DO-C2

5a. ISSUED BY
NAVFAC SOUTHEAST
SOUTH TEXAS AREA
PWD CORPUS CHRISTI/PWD INGLESIDE
8851 OCEAN DRIVE, BLDG 19
CORPUS CHRISTI TX 78419-5525

6. DELIVER BY *(Date)*
SEE SCHEDULE

7. DELIVERY
[X] FOB DESTINATION [ ] OTHER *(See Schedule)*

5b. FOR INFORMATION CALL: *(Name and Telephone no.) (No collect calls)*
JOEL OVERSON 361-961-3397

8. TO: NAME AND ADDRESS, INCLUDING ZIP CODE

9. DESTINATION *(Consignee and address, including ZIP Code)*
PWD CORPUS CHRISTI
INSPECTOR OF RECORD
8851 OCEAN DR, BLDG. 19
CORPUS CHRISTI TX 78419-5525
TEL: 361-961-3397 FAX:

10. PLEASE FURNISH QUOTATIONS TO THE ISSUING OFFICE IN BLOCK 5a ON OR BEFORE CLOSE OF BUSINESS:
(Date) 25-Apr-2016

IMPORTANT: This is a request for information, and quotations furnished are not offers. If you are unable to quote, please so indicate on this form and return it to the address in Block 5a. This request does not commit the Government to pay any costs incurred in the preparation of the submission of this quotation or to contract for supplies or services. Supplies are of domestic origin unless otherwise indicated by quoter. Any representations and/or certifications attached to this Request for Quotations must be completed by the quoter.

11. SCHEDULE *(Include applicable Federal, State, and local taxes)*

ITEM NO. (a)	SUPPLIES/ SERVICES (b)	QUANTITY (c)	UNIT (d)	UNIT PRICE (e)	AMOUNT (f)
	SEE SCHEDULE				

12. DISCOUNT FOR PROMPT PAYMENT	a. 10 CALENDAR DAYS %	b. 20 CALENDAR DAYS %	c. 30 CALENDAR DAYS %	d. CALENDAR DAYS No. %

NOTE: Additional provisions and representations [ ] are [ ] are not attached.

13. NAME AND ADDRESS OF QUOTER *(Street, City, County, State, and ZIP Code)*	14. SIGNATURE OF PERSON AUTHORIZED TO SIGN QUOTATION	15. DATE OF QUOTATION
	16. NAME AND TITLE OF SIGNER *(Type or print)*	TELEPHONE NO. *(Include area code)*

Section SF 30 - BLOCK 14 CONTINUATION PAGE

STATEMENT OF WORK

GENERAL INFORMATION:

Document Type: Combined Synopsis/Solicitation Notice

Solicitation Number: N69450-16-Q-3226

Set Aside: 100% Total Small Business

NAICS Code: 238990, Size standard in Millions: $15.0

DESCRIPTION / SCOPE OF WORK: Contractor is to provide all Labor, Materials, equipment, Tools, Transportation and Management necessary to replace the ASOS sensor poles at NAS Corpus Christi, TX.

This announcement constitutes the only solicitation; no separate written solicitation will be issued.

BASIS FOR AWARD: AWARD WILL BE BASED ON LOWEST PRICE.

Target Price Range is less than $20K

Anticipated award date: 5 days after close of solicitation

Quotes are to be received no later than 5:00 p.m. central standard time on 25 April 2016. Proposals should be emailed to joel.overson@navy.mil

Any changes to the solicitation or RFI's will be posted on FEDBIZOPS (www.fbo.gov) for the mutual benefit of all bidders.

ADDITIONAL INFORMATION:

Solicitation document shall be signed by bidders and all applicable Certifications and Representations shall be completed. Offer should be in sufficient detail to ensure that the technical team can determine the offer complies with the Statement of Work (SOW).

All payments are to be paid via the Internet through the Wide Area Work Flow (WAWF) system. WAWF may be accessed at https://wawf.eb.mil. WAWF training may be accessed online at http://www.wawftraining.com . Payment information may be accessed using the DFAS website at https:www.dfas.mil. Your purchase order/contract number or invoice will be required to inquire status of your payment.

Be advised that all interested parties must be registered in the System for Award Management (SAM) Database in order to receive payment for products/services

rendered to the Government as the result of an award. If you are not registered you may request an application at (334) 206-7828 or through the SAM website at https://sam.gov.

Rapid Gate Information: The Navy has implemented a new security access program for the Corpus Christi and Kingsville Naval Air Stations. This program, called Rapid gate, will reduce expenses, reduce risk, and insure quicker access for people coming to the installation. You must either call 1-877-727-4342 or go online to http://rapidgate.com Once the company is enrolled, your employees can register at the installation. If your company employees have been authorized the common access card (CAC), it is not necessary to enroll in the rapid gate program.

SITE VISIT INFORMATION:

1. One site visit will be held to ensure all potential offerors have uniform information in order to make an accurate proposal.

2. Site visit will be conducted on **31 MAR 2016 at 0900 a.m. central time at NAS Corpus Christi, TX.** All potential offerors are encouraged to attend the site visit to perform an inspection of the size and current layout.

3. Offerors are expected to satisfy themselves as to the general and local conditions that may affect the cost of the performance of the work to the extent that such information is reasonably obtainable. It is considered impractical to determine, without inspection, the exact nature of the work and site conditions under which the work is to be performed.

4. To attend please contact the Site Visit POC.

Site Visit POC:
Julian Reyes
julian.reyes@navy.mil
361-961-2830

Deadline for receipt of this form is one week prior to the site visit. It is the responsibility of the contractor to confirm this form is received. After submission of form should a person not be available to attend, send a cancellation email to the same POC.

5. Interested parties are advised to arrive by an hour early in order to receive security passes and clearance.

6. The contractor may require, and should have, their own ear plugs, safety glasses and safety shoes to have access to the work site.

STATEMENT OF WORK

Replace Galvanized Steel ASOS Sensor Poles at Various Locations.

1. GENERAL DESCRIPTION: The Contractor shall provide all supervision, transportation, labor, materials, equipment and incidental work necessary to Replace ASOS (Automated Surface Observing System) Sensor Poles See paragraph 13 for detailed statement work.

2. LOCATION: The work is located at Waldron, Cabaniss, and NASCC Airfield Corpus Christi, Texas. See Attachment A for project location.

3. PERIOD OF PERFORMANCE: The period of performance is 60 calendar days. The period of performance starts when the contract/task order is awarded, and ends when the work is completed and accepted by the Government. The period of performance includes pre-construction submittals, material/equipment lead time, and all construction activities up to final acceptance. The period of performance is negotiable; hence, if the contractor believes a different/longer period of performance is needed, they should negotiate this with the Contract Specialist prior to task order/contract award.

4. EXAMINATION OF SITE: Bidders are expected to visit the site, take their own measurements, inspect carefully the work area and satisfy themselves as to the character and amount of work to be done. Site visit will be scheduled in advance. Arrangements to visit the site may be made by contacting the Contracting Officer's Representative. See site visit information above.

5. WORK RESTRICTIONS: The following work restriction apply to this project:

5.1 Schedule hours: The work shall be so scheduled as to cause a minimum of interference to the normal operations of the tenants. Work shall be accomplished between the hours of 7:30 A.M. and 4:30 P.M., Monday through Friday. If the Contractor desires to work on Saturday, Sunday, holidays, or outside of the Station's regular hours, an application may be submitted to the Contracting Officer for approval.

5.2 RAPID Gate: All contractor and subcontractor personnel shall obtain a RAPID Gate pass to gain access to NAS Corpus Christi. Please allow three days for processing of all RAPID Gate applications. See http://www.rapidgate.com for additional information and costs. Costs incurred to obtain base access credentials are not directly reimbursable. No equitable adjustment in contract cost/price or schedule shall be allowed on account of the contractor participating in any program to obtain installation access.

5.3 Flight Line Pass: All contractor and subcontractor personnel working on airfield or flight line shall obtain flight a line pass. The flight line pass is offered at no costs to the contractor, but

requires up to three days to process. Once the individual's application is processed, he/she shall proceed to the pass and tag office to have the flight line pass issued.
5.4 Airfield Vehicle Operators License: For projects located on the flight line or airfield, contractor or subcontractor personnel operating vehicles must also obtain one of two levels of licenses: (1) the Area 1 license (controlled movement areas), or (2) the Area 2 (aprons, non-runway/taxiway area). This license is required so ensure that all drivers are familiar with the airfield, its safety rules and radio protocols when operating vehicles where aircraft are present. The license must be obtained before the flight line pass. The license must be presented when obtaining the flight line pass in order to properly code the flight line pass to allow the driver to pass through the airfield access gate. Licenses are offered at no cost to the contractor.

5.4.1 Area 2 License - Area 2 includes all parking aprons, hangars, and associated facilities. To obtain an Area 2 license, vehicle operators must attend a one-hour class conducted on Tuesdays.

5.4.2 Area 1 License - Area 1 includes all runways, taxiways, and the perimeter road. To operate a vehicle in Area 1, the driver must attend an 8-hour class that is offered on Thursdays and continues into the next day(s). To obtain an Area 1 license, the operator must attend the class, pass a written test, and complete a day and night time practical test. An Area 1 license enables the driver the ability to drive on the entirety of the airfield, but the Area 2 license does not grant access to drive beyond the aprons.

5.5 Material deliveries: Material delivery trucks do not necessarily require RAPID Gate passes, flight line passes, or ramp passes. However, any material delivery driver that does not have a RAPID Gate pass must be escorted by Government personnel. To properly plan for Government escort availability, three (3) working days' notice is required for all material deliveries. Any material delivery driver that possesses a RAPID Gate pass does not require Government escort or advance notification unless the material is to be delivered on the flight line or airfield.

5.6 Time-Sensitive Material Deliveries: Time-sensitive material deliveries such as asphalt or concrete require pre-arrangement by NAS Security personnel to ensure expedited access at the entrance gate. Seven (7) calendar days' notice is required for time-sensitive material.

6. PROTECTION OF EXISTING WORK: Existing work to remain shall be protected from damage. Work damaged by the Contractor shall be repaired to original condition at no additional cost to the Government.

7. NAS FIRE REGULATIONS: "Hot work" permits are issued to the Contractor by the Fire Prevention Inspectors by calling 961-4151 or 961-4983. Permits are issued on a daily basis only and from start of work until finished. Permits are required for all "hot work" and before entering buildings. ("Hot work" includes all welding, cutting, soldering/brazing, blow torches, etc.)

8. SAFETY REQUIREMENTS: The Contractor shall comply with the safety rules and regulations pertaining to the activity, and shall govern employees according to, and in compliance with applicable OSHA Regulations and U.S. Army Corps of Engineers Safety and Health Manual EM 385-1-1. The Contractor shall maintain an accurate record of exposure data

on all accidents incidental to work performed under this contract resulting in death, traumatic injury, occupational disease, or damage to property, materials, supplies, or equipment. The Contractor shall report this data in the manner prescribed by the Contracting Officer. A written safety plan**,** outlining all Contractor Safety Procedures, will be required for all work under this contract, and is subject to acceptance by PWD Corpus Christi FEAD prior to commencement of work.

8.1 Lock out/ Tag Out Policy: (Use if applicable to the work described)

a. Combination locks shall not be used for lockout;

b. No two (2) lockout devices (locks) shall be keyed alike;

c. No more than two (2) keys shall exist for any lock. The worker shall maintain one key, and the supervisor shall maintain the other in a location readily accessible in the event of an emergency;

d. Both lockout and tag-out devices shall indicate the identifier of the employee applying the device(s). Tag-out devices shall include the cognizant shop (or code), the telephone number where the employee can be reached during working hours, name of his/her supervisor, date the device was applied, and the machine, equipment, or system component that is de-energized.

9. ASBESTOS AND LEAD: There is no known asbestos containing material (ACM) and/or lead based paint on this project. If additional materials are encountered which may contain ACM and/or leads, DO NOT TOUCH THE MATERIAL. IMMEDIATELY NOTIFY THE CONTRACTING OFFICER IN WRITING. Within a reasonable time, the Government will perform tests to determine if asbestos or lead is present. If the materials are determined not to contain ACM or lead, the Contractor shall proceed without change. If it is determined that ACM and/lead are present and must be disturbed, the Contracting Officer may direct a change accordingly.

10. WEIGHT HANDLING EQUIPMENT (WHE): The provision of NAVFAC Publication P-307 apply to all civilian, military, and contractor personnel who operate weight handling equipment and use crane related rigging gear on board Naval Air Station Corpus Christi, Texas.

11. EXCAVATIONS AND OUTAGES: Any excavation greater than 6 inches below grade requires an excavation permit. Any utility or HVAC outage affecting inhabited work space, inhabited living space, or exit from an inhabited work space/living space requires an Outage Permit. For Excavation and Outage contact the government point of contact listed in paragraph 13.3.

12. ATTACHMENTS: The following sketches are a part of this specification and shall not be used for any purpose other than that contemplated by this contract:

Attachment	Title
A	Project Location
B	Solid Waste Report
C	ASOS As Built Drawings

13. SCOPE OF WORK: The statement of work consists of replacing total of 32 (thirty-two) disintegrated/corroded galvanized steel poles as well as concrete base that support the ASOS (Automatic Surface Observing System) sensors for airfield operations at four different locations as shown on the attachment A. All attached sensors and utilities lines above from the flange will be removed and reinstalled by the government. The contractor will be responsible replacing existing galvanized steel poles as well as concrete base schedule 40 galvanized steel poles, flanges, raceway per attachment B design as-built drawings.

1. Contractor shall acquire excavation permits through NAVFAC prior to commencement of work.
2. Existing concrete foundations that require new galvanized poles shall be demolished and removed from the site.
3. De-attach all existing grounding system/rods and re-attach after the completion of work.
4. Remove and replace 8 (eight) schedule 40 galvanized steel pipes for each location including concrete base, granular No. 1 bedding materials, and c-channel raceway. Refer attachment a for each location of project.
5. All debris shall be disposed and hauled off daily from the installation to prevent FOD (Foreign Object Debris) at airfield.
6. Subgrade for new concrete base to support galvanized steel poles shall be formed by excavating to the depth of 30” (inches) and 48” (inches) at 12” (inches) diameter shaped to the proper cross section. Refer sheet 3 from attachment C for details.
7. Subgrade shall be thoroughly compacted before placing 4” (inches) of granular base material.
8. All schedule 40 galvanized steel poles shall be on center of excavation and 5” (inches) clear from top of granular base material before 3500 psi concrete pour. The required galvanized steel pole sizes and lengths vary. Refer Attachment C details sheet 3-7 for the sizes, heights and embedment of all galvanized steel pipes.
9. The concrete shall be 3500 psi and footing shall be raised 6” (inches) from the natural grade. (3.5 cubic yards for each location).
10. 6 new galvanized steel poles with flanges attached/welded shall be stubbed up 18” (inches) above natural ground.
11. 2 new galvanized steel poles located on center shall be continuous vertically 11’ (feet) 8” (inches) and 14’ (feet) 8” (inches) in height.
12. Contractor shall not disturb the existing utilities (electrical distribution) systems.
13. Place granular No. 1 material on the perimeter around the area of new poles (Approximately 6.6 square yard). Refer Attachment C sheet 2 for line/perimeter of gravel placement location.
14. 2(two) existing concrete pads adjacent to center poles shall be remained.

15. All new galvanized steel poles including flanges shall be painted with white fast cure epoxy coating paint in accordance with manufacturer's instructions.

13.1 The contractor shall conduct his own survey of the site to determine existing features, conditions, and measurements. The contractor shall report any discrepancy between the statement of work and existing conditions prior to the commencement of work.

13.2 The contractor shall coordinate with the FEAD Department approximately three working days in advance of start of work to let the occupant of the building know when the construction is to take place so that they may notify their personnel to remain clear of the jobsite and to not affect scheduled work hours.

13.3 All work under this Contract is to be accomplished with FEAD Department oversight. The contractor shall coordinate with the FEAD Point of Contact site visit access. The contractor shall give notice to the FEAD Point of Contact prior to accomplishment of any work. The Point of Contact will be appointed by the Contracting Officer

13.4 Keep the jobsite clean at all times, and remove all debris from the station.

13.5 Submittals: Submittals shall be provided and approved prior to delivery to the job site. If submittals contain information for more than one product type, clearly indicate which product type is being submitted for approval. Provide submittals for the following materials to be furnished and delivered under this contract to the Contracting Officer for approval prior to installation:

Submittals:

a. Paint Product Information
b. New No. 1 bedding Material

13.6 Work Schedule: Submit schedule of work to include start date and end date of all major activities.

14. PRODUCTS: Products shall be new, manufacturer's standard products, and commonly available from manufacturer's stock.

15. TERMS OF PAYMENT: Refer to contract clauses and amendments for payment terms and conditions.

16. ORAL MODIFICATIONS: No oral statement of any person other than the Contracting Officer or his/her representative, as provided in the contract clause entitled "Changes" shall in any manner or degree modify or otherwise affect the terms of this contract.

17. CLEANUP: The premises shall be kept free at all times from the accumulation of waste material and/or rubbish resulting from the work. Combustibles shall be removed daily, and upon

completion of the work, all debris, tools, and other surplus materials shall be removed and the premises left in approved condition.

18. ENVIRONMENTAL REQUIREMENTS: Take no action or inaction that exposes the Government to liability for non-compliance or other findings or damages, penalties or fines related thereto. In the event a regulatory agency assesses either a monetary or non-monetary fine or penalty for Contractor's noncompliance, the Contractor shall reimburse the Government for all associated cost. Remove all hazardous material and waste upon completion of the contract. Abandoned waste shall be managed as "unknown waste", and the contractor shall bear the cost of any analytical, disposal, or other costs incurred.

18. 1 Regulated Waste: Regulated waste is defined as (1) hazardous waste as defined in EPA Regulations 40 CFR 261, (2) universal waste as defined in EPA Regulations 40 CFR 273, and (3) Class 1 industrial waste as defined in Texas Commission on Environmental Quality Regulations 30 Texas Administrative Code Parts 335 and 503. Manage all regulated waste and used oil in accordance with applicable federal, state, and local regulations, Navy and NASCC policies and instructions. All regulated waste shall be manifested through PWD Corpus Christi Environmental Division.

Before generating regulated waste obtain approval for storage from the Environmental Division. Application for approval shall include including location and type of storage (i.e. Satellite Accumulation Point or <90-day Storage Area). Contractor shall provide immediate access to PWD Corpus Christi Environmental Division to inspection any locked units. Contractor shall inspect their regulated waste storage areas and provide weekly inspection reports to the Government POC.

PWD Corpus Christi Hazardous Waste Commodity Branch (HWCB) provides comprehensive regulated waste disposal services. If the contractor chooses to dispose of regulated waste through the HWCB, contractor shall establish a line of credit with the HWCB and provide required waste stream information **before generating any waste.** If contractor chooses not to dispose of regulated waste through the HWCB, the contractor shall provide funding to the HWCB for manifesting services. For FY 16 the rate is $68 per manifest. The contact phone number for the HWCB is 361-961-3760. Contractor shall contact the HWCB before make any arrangements to remove regulated waste from the installation.

18.2 Solid Waste Disposal: All waste not covered under paragraph 18.1 must be tracked by NASCC whether directly disposed in a landfill or recycled. Contractor shall recycle waste to the greatest extent feasible. The solid waste tracking form is included in Attachment B. Contractor shall provide the filled out form to the Government POC at the close of the project.

18.3 Environmental Assessment Compliance Training and Tracking System (ECATTS):
The project quality control manager shall complete ECATTS training **prior** to starting work.

ECATTS is available 24/7 on the Internet. Contractors who perform work on more than one contract for the same installation or within the same state will not have to take the training each

time they start a new project. Contractors will carry forward all applicable credits received for taking ECATTS to future contracts.

ECATTS is available at:
https://environmentaltraining.ecatts.com/
Registration Password = navfac (case sensitive)
Sample registration instructions that can be provided to users are available from ECATTS Customer Support.

18.4 Storm Water Containment: Block solids in storm water runoff to all nearby storm sewers with silt screen. Secure all loose dirt by using temporary berm to avoid discharge to storm inlet. Storm water best management practices must be implemented in accordance with station's storm water management plan. PWD Corpus Christi Environmental Division POC is Bernice Snyder at 961-5353 or Mr. Ross Ybarra at 961-2170.

19. PMI INVENTORY CARD: Contractor shall provide a completed PMI Equipment Inventory Card included as Attachment C for each piece of dynamic equipment containing a serial number. This requirement is in addition to any other operation and maintenance information required in the Submittals paragraph.

20. ACCEPTANCE: The work shall be accepted as a result of a final inspection conducted by a representative of the Facility Engineering and Acquisition Division, Public Works Department Corpus Christi.

21. WARRANTY: All workmanship and materials and/or equipment shall be warranted for a period of not less than one year under normal wear and tear or the normal standard warranty should it extend beyond one year.

*** END OF SPECIFICATIONS ***

Section 00010 - Solicitation Contract Form

ITEM NO	SUPPLIES/SERVICES	QUANTITY	UNIT	UNIT PRICE	AMOUNT
0001		1	Job		
	ASOS POLES FFP REPLACE GALVANIZED ASOS SENSOR POLES AT FOUR LOCATIONS AT NAS CORPUS CHRISTI, TX. PERIOD OF PERFORMANCE WILL BE A TOTAL OF 60 CALENDAR DAYS INCLUDING DESIGN, DESIGN APPROVAL, AND CONSTRUCTION. FOB: Destination				
				NET AMT	

INSPECTION AND ACCEPTANCE TERMS

Supplies/services will be inspected/accepted at:

CLIN	INSPECT AT	INSPECT BY	ACCEPT AT	ACCEPT BY
0001	Destination	Government	Destination	Government

DELIVERY INFORMATION

CLIN	DELIVERY DATE	QUANTITY	SHIP TO ADDRESS	UIC
0001	22-JUL-2016	1	PWD CORPUS CHRISTI INSPECTOR OF RECORD 8851 OCEAN DR, BLDG. 19 CORPUS CHRISTI TX 78419-5525 361-961-3397 FOB: Destination	N44215

Section 00100 - Bidding Schedule/Instructions to Bidders

CLAUSES INCORPORATED BY FULL TEXT

52.215-1 INSTRUCTIONS TO OFFERORS--COMPETITIVE ACQUISITION (JAN 2004)

(a) Definitions. As used in this provision--

“Discussions” are negotiations that occur after establishment of the competitive range that may, at the Contracting Officer's discretion, result in the offeror being allowed to revise its proposal.

“In writing or written” means any worded or numbered expression which can be read, reproduced, and later communicated, and includes electronically transmitted and stored information.

“Proposal modification” is a change made to a proposal before the solicitation's closing date and time, or made in response to an amendment, or made to correct a mistake at any time before award.

“Proposal revision” is a change to a proposal made after the solicitation closing date, at the request of or as allowed by a Contracting Officer as the result of negotiations.

“Time”, if stated as a number of days, is calculated using calendar days, unless otherwise specified, and will include Saturdays, Sundays, and legal holidays. However, if the last day falls on a Saturday, Sunday, or legal holiday, then the period shall include the next working day.

(b) Amendments to solicitations. If this solicitation is amended, all terms and conditions that are not amended remain unchanged. Offerors shall acknowledge receipt of any amendment to this solicitation by the date and time specified in the amendment(s).

(c) Submission, modification, revision, and withdrawal of proposals. (1) Unless other methods (e.g., electronic commerce or facsimile) are permitted in the solicitation, proposals and modifications to proposals shall be submitted in paper media in sealed envelopes or packages (i) addressed to the office specified in the solicitation, and (ii) showing the time and date specified for receipt, the solicitation number, and the name and address of the offeror. Offerors using commercial carriers should ensure that the proposal is marked on the outermost wrapper with the information in paragraphs (c)(1)(i) and (c)(1)(ii) of this provision.

(2) The first page of the proposal must show--

(i) The solicitation number;

(ii) The name, address, and telephone and facsimile numbers of the offeror (and electronic address if available);

(iii) A statement specifying the extent of agreement with all terms, conditions, and provisions included in the solicitation and agreement to furnish any or all items upon which prices are offered at the price set opposite each item;

(iv) Names, titles, and telephone and facsimile numbers (and electronic addresses if available) of persons authorized to negotiate on the offeror's behalf with the Government in connection with this solicitation; and

(v) Name, title, and signature of person authorized to sign the proposal. Proposals signed by an agent shall be accompanied by evidence of that agent's authority, unless that evidence has been previously furnished to the issuing office.

(3) Submission, modification, or revision, of proposals.

(i) Offerors are responsible for submitting proposals, and any modifications, or revisions, so as to reach the Government office designated in the solicitation by the time specified in the solicitation. If no time is specified in the solicitation, the time for receipt is 4:30 p.m., local time, for the designated Government office on the date that proposal or revision is due.

(ii)(A) Any proposal, modification, or revision received at the Government office designated in the solicitation after the exact time specified for receipt of offers is “late” and will not be considered unless it is received before award is made, the Contracting Officer determines that accepting the late offer would not unduly delay the acquisition; and--

(1) If it was transmitted through an electronic commerce method authorized by the solicitation, it was received at the initial point of entry to the Government infrastructure not later than 5:00 p.m. one working day prior to the date specified for receipt of proposals; or

(2) There is acceptable evidence to establish that it was received at the Government installation designated for receipt of offers and was under the Government's control prior to the time set for receipt of offers; or

(3) It is the only proposal received.

(B) However, a late modification of an otherwise successful proposal that makes its terms more favorable to the Government, will be considered at any time it is received and may be accepted.

(iii) Acceptable evidence to establish the time of receipt at the Government installation includes the time/date stamp of that installation on the proposal wrapper, other documentary evidence of receipt maintained by the installation, or oral testimony or statements of Government personnel.

(iv) If an emergency or unanticipated event interrupts normal Government processes so that proposals cannot be received at the office designated for receipt of proposals by the exact time specified in the solicitation, and urgent Government requirements preclude amendment of the solicitation, the time specified for receipt of proposals will be deemed to be extended to the same time of day specified in the solicitation on the first work day on which normal Government processes resume.

(v) Proposals may be withdrawn by written notice received at any time before award. Oral proposals in response to oral solicitations may be withdrawn orally. If the solicitation authorizes facsimile proposals, proposals may be withdrawn via facsimile received at any time before award, subject to the conditions specified in the provision at 52.215-5, Facsimile Proposals. Proposals may be withdrawn in person by an offeror or an authorized representative, if the identity of the person requesting withdrawal is established and the person signs a receipt for the proposal before award.

(4) Unless otherwise specified in the solicitation, the offeror may propose to provide any item or combination of items.

(5) Offerors shall submit proposals in response to this solicitation in English, unless otherwise permitted by the solicitation, and in U.S. dollars, unless the provision at FAR 52.225-17, Evaluation of Foreign Currency Offers, is included in the solicitation.

(6) Offerors may submit modifications to their proposals at any time before the solicitation closing date and time, and may submit modifications in response to an amendment, or to correct a mistake at any time before award.

(7) Offerors may submit revised proposals only if requested or allowed by the Contracting Officer.

(8) Proposals may be withdrawn at any time before award. Withdrawals are effective upon receipt of notice by the Contracting Officer.

(d) Offer expiration date. Proposals in response to this solicitation will be valid for the number of days specified on the solicitation cover sheet (unless a different period is proposed by the offeror).

(e) Restriction on disclosure and use of data. Offerors that include in their proposals data that they do not want disclosed to the public for any purpose, or used by the Government except for evaluation purposes, shall--

(1) Mark the title page with the following legend: This proposal includes data that shall not be disclosed outside the Government and shall not be duplicated, used, or disclosed--in whole or in part--for any purpose other than to evaluate this proposal. If, however, a contract is awarded to this offeror as a result of--or in connection with-- the submission of this data, the Government shall have the right to duplicate, use, or disclose the data to the extent provided in the resulting contract. This restriction does not limit the Government's right to use information contained in this data if it is obtained from another source without restriction. The data subject to this restriction are contained in sheets [insert numbers or other identification of sheets]; and

(2) Mark each sheet of data it wishes to restrict with the following legend: Use or disclosure of data contained on this sheet is subject to the restriction on the title page of this proposal.

(f) Contract award. (1) The Government intends to award a contract or contracts resulting from this solicitation to the responsible offeror(s) whose proposal(s) represents the best value after evaluation in accordance with the factors and subfactors in the solicitation.

(2) The Government may reject any or all proposals if such action is in the Government's interest.

(3) The Government may waive informalities and minor irregularities in proposals received.

(4) The Government intends to evaluate proposals and award a contract without discussions with offerors (except clarifications as described in FAR 15.306(a)). Therefore, the offeror's initial proposal should contain the offeror's best terms from a cost or price and technical standpoint. The Government reserves the right to conduct discussions if the Contracting Officer later determines them to be necessary. If the Contracting Officer determines that the number of proposals that would otherwise be in the competitive range exceeds the number at which an efficient competition can be conducted, the Contracting Officer may limit the number of proposals in the competitive range to the greatest number that will permit an efficient competition among the most highly rated proposals.

(5) The Government reserves the right to make an award on any item for a quantity less than the quantity offered, at the unit cost or prices offered, unless the offeror specifies otherwise in the proposal.

(6) The Government reserves the right to make multiple awards if, after considering the additional administrative costs, it is in the Government's best interest to do so.

(7) Exchanges with offerors after receipt of a proposal do not constitute a rejection or counteroffer by the Government.

(8) The Government may determine that a proposal is unacceptable if the prices proposed are materially unbalanced between line items or subline items. Unbalanced pricing exists when, despite an acceptable total evaluated price, the price of one or more contract line items is significantly overstated or understated as indicated by the application of cost or price analysis techniques. A proposal may be rejected if the Contracting Officer determines that the lack of balance poses an unacceptable risk to the Government.

(9) If a cost realism analysis is performed, cost realism may be considered by the source selection authority in evaluating performance or schedule risk.

(10) A written award or acceptance of proposal mailed or otherwise furnished to the successful offeror within the time specified in the proposal shall result in a binding contract without further action by either party.

(11) If a post-award debriefing is given to requesting offerors, the Government shall disclose the following information, if applicable:

(i) The agency's evaluation of the significant weak or deficient factors in the debriefed offeror's offer.

(ii) The overall evaluated cost or price and technical rating of the successful and the debriefed offeror and past performance information on the debriefed offeror.

(iii) The overall ranking of all offerors, when any ranking was developed by the agency during source selection.

(iv) A summary of the rationale for award.

(v) For acquisitions of commercial items, the make and model of the item to be delivered by the successful offeror.

(vi) Reasonable responses to relevant questions posed by the debriefed offeror as to whether source-selection procedures set forth in the solicitation, applicable regulations, and other applicable authorities were followed by the agency.

(End of provision)

Section 00600 - Representations & Certifications

CLAUSES INCORPORATED BY FULL TEXT

52.204-8 ANNUAL REPRESENTATIONS AND CERTIFICATIONS (JAN 2016)

(a)(1) The North American Industry Classification System (NAICS) code for this acquisition is [insert NAICS code].

(2) The small business size standard is [insert size standard].

(3) The small business size standard for a concern which submits an offer in its own name, other than on a construction or service contract, but which proposes to furnish a product which it did not itself manufacture, is 500 employees.

(b)(1) If the provision at 52.204-7, System for Award Management, is included in this solicitation, paragraph (d) of this provision applies.

(2) If the provision at 52.204-7 is not included in this solicitation, and the offeror is currently registered in System for Award Management (SAM), and has completed the Representations and Certifications section of SAM electronically, the offeror may choose to use paragraph (d) of this provision instead of completing the corresponding individual representations and certifications in the solicitation. The offeror shall indicate which option applies by checking one of the following boxes:

( ) Paragraph (d) applies.

( ) Paragraph (d) does not apply and the offeror has completed the individual representations and certifications in the solicitation.

(c) (1) The following representations or certifications in SAM are applicable to this solicitation as indicated:

(i) 52.203-2, Certificate of Independent Price Determination. This provision applies to solicitations when a firm-fixed-price contract or fixed-price contract with economic price adjustment is contemplated, unless—

(A) The acquisition is to be made under the simplified acquisition procedures in Part 13;

(B) The solicitation is a request for technical proposals under two-step sealed bidding procedures; or

(C) The solicitation is for utility services for which rates are set by law or regulation.

(ii) 52.203-11, Certification and Disclosure Regarding Payments to Influence Certain Federal Transactions. This provision applies to solicitations expected to exceed $150,000.

(iii) 52.204-3, Taxpayer Identification. This provision applies to solicitations that do not include the provision at 52.204-7, System for Award Management.

(iv) 52.204-5, Women-Owned Business (Other Than Small Business). This provision applies to solicitations that—

(A) Are not set aside for small business concerns;

(B) Exceed the simplified acquisition threshold; and

(C) Are for contracts that will be performed in the United States or its outlying areas.

(v) 52.209-2; Prohibition on Contracting with Inverted Domestic Corporations--Representation.

(vi) 52.209-5; Certification Regarding Responsibility Matters. This provision applies to solicitations where the contract value is expected to exceed the simplified acquisition threshold.

(vii) 52.214-14, Place of Performance--Sealed Bidding. This provision applies to invitations for bids except those in which the place of performance is specified by the Government.

(viii) 52.215-6, Place of Performance. This provision applies to solicitations unless the place of performance is specified by the Government.

(ix) 52.219-1, Small Business Program Representations (Basic & Alternate I). This provision applies to solicitations when the contract will be performed in the United States or its outlying areas.

(A) The basic provision applies when the solicitations are issued by other than DoD, NASA, and the Coast Guard.

(B) The provision with its Alternate I applies to solicitations issued by DoD, NASA, or the Coast Guard.

(x) 52.219-2, Equal Low Bids. This provision applies to solicitations when contracting by sealed bidding and the contract will be performed in the United States or its outlying areas.

(xi) 52.222-22, Previous Contracts and Compliance Reports. This provision applies to solicitations that include the clause at 52.222-26, Equal Opportunity.

(xii) 52.222-25, Affirmative Action Compliance. This provision applies to solicitations, other than those for construction, when the solicitation includes the clause at 52.222-26, Equal Opportunity.

(xiii) 52.222-38, Compliance with Veterans' Employment Reporting Requirements. This provision applies to solicitations when it is anticipated the contract award will exceed the simplified acquisition threshold and the contract is not for acquisition of commercial items.

(xiv) 52.223-1, Biobased Product Certification. This provision applies to solicitations that require the delivery or specify the use of USDA-designated items; or include the clause at 52.223-2, Affirmative Procurement of Biobased Products Under Service and Construction Contracts.

(xv) 52.223-4, Recovered Material Certification. This provision applies to solicitations that are for, or specify the use of, EPA- designated items.

(xvi) 52.225-2, Buy American Certificate. This provision applies to solicitations containing the clause at 52.225-1.

(xvii) 52.225-4, Buy American--Free Trade Agreements--Israeli Trade Act Certificate. (Basic, Alternates I, II, and III.) This provision applies to solicitations containing the clause at 52.225- 3.

(A) If the acquisition value is less than $25,000, the basic provision applies.

(B) If the acquisition value is $25,000 or more but is less than $50,000, the provision with its Alternate I applies.

(C) If the acquisition value is $50,000 or more but is less than $77,533, the provision with its Alternate II applies.

(D) If the acquisition value is $77,533 or more but is less than $100,000, the provision with its Alternate III applies.

(xviii) 52.225-6, Trade Agreements Certificate. This provision applies to solicitations containing the clause at 52.225-5.

(xix) 52.225-20, Prohibition on Conducting Restricted Business Operations in Sudan--Certification. This provision applies to all solicitations.

(xx) 52.225-25, Prohibition on Contracting with Entities Engaging in Certain Activities or Transactions Relating to Iran—Representation and Certification. This provision applies to all solicitations.

(xxi) 52.226-2, Historically Black College or University and Minority Institution Representation. This provision applies to solicitations for research, studies, supplies, or services of the type normally acquired from higher educational institutions.

(2) The following representations or certifications are applicable as indicated by the Contracting Officer:

[Contracting Officer check as appropriate.]

(i) 52.204-17, Ownership or Control of Offeror.

(ii) 52.222-18, Certification Regarding Knowledge of Child Labor for Listed End Products.

(iii) 52.222-48, Exemption from Application of the Service Contract Labor Standards to Contracts for Maintenance, Calibration, or Repair of Certain Equipment--Certification.

(iv) 52.222-52 Exemption from Application of the Service Contract Labor Standards to Contracts for Certain Services--Certification.

(v) 52.223-9, with its Alternate I, Estimate of Percentage of Recovered Material Content for EPA-Designated Products (Alternate I only).

(vi) 52.227-6, Royalty Information.

(A) Basic.

(B) Alternate I.

(vii) 52.227-15, Representation of Limited Rights Data and Restricted Computer Software.

(d) The offeror has completed the annual representations and certifications electronically via the SAM website accessed through https://www.acquisition.gov. After reviewing the SAM database information, the offeror verifies by submission of the offer that the representations and certifications currently posted electronically that apply to this solicitation as indicated in paragraph (c) of this provision have been entered or updated within the last 12 months, are current, accurate, complete, and applicable to this solicitation (including the business size standard applicable to the NAICS code referenced for this solicitation), as of the date of this offer and are incorporated in this offer by reference (see FAR 4.1201); except for the changes identified below [offeror to insert changes, identifying change by clause number, title, date]. These amended representation(s) and/or certification(s) are also incorporated in this offer and are current, accurate, and complete as of the date of this offer.

FAR Clause	Title	Date	Change

Any changes provided by the offeror are applicable to this solicitation only, and do not result in an update to the representations and certifications posted on SAM.

(End of provision)

52.204-10 REPORTING EXECUTIVE COMPENSATION AND FIRST-TIER SUBCONTRACT AWARDS (OCT 2015)

(a) Definitions. As used in this clause:

Executive means officers, managing partners, or any other employees in management positions.

First-tier subcontract means a subcontract awarded directly by the Contractor for the purpose of acquiring supplies or services (including construction) for performance of a prime contract. It does not include the Contractor's supplier agreements with vendors, such as long-term arrangements for materials or supplies that benefit multiple contracts and/or the costs of which are normally applied to a Contractor's general and administrative expenses or indirect costs.

Month of award means the month in which a contract is signed by the Contracting Officer or the month in which a first-tier subcontract is signed by the Contractor.

Total compensation means the cash and noncash dollar value earned by the executive during the Contractor's preceding fiscal year and includes the following (for more information see 17 CFR 229.402(c)(2)):

(1) Salary and bonus.

(2) Awards of stock, stock options, and stock appreciation rights. Use the dollar amount recognized for financial statement reporting purposes with respect to the fiscal year in accordance with the Financial Accounting Standards Board's Accounting Standards Codification (FASB ASC) 718, Compensation-Stock Compensation.

(3) Earnings for services under non-equity incentive plans. This does not include group life, health, hospitalization or medical reimbursement plans that do not discriminate in favor of executives, and are available generally to all salaried employees.

(4) Change in pension value. This is the change in present value of defined benefit and actuarial pension plans.

(5) Above-market earnings on deferred compensation which is not tax-qualified.

(6) Other compensation, if the aggregate value of all such other compensation (e.g., severance, termination payments, value of life insurance paid on behalf of the employee, perquisites or property) for the executive exceeds $10,000.

(b) Section 2(d)(2) of the Federal Funding Accountability and Transparency Act of 2006 (Pub. L. 109-282), as amended by section 6202 of the Government Funding Transparency Act of 2008 (Pub. L. 110-252), requires the Contractor to report information on subcontract awards. The law requires all reported information be made public, therefore, the Contractor is responsible for notifying its subcontractors that the required information will be made public.

(c) Nothing in this clause requires the disclosure of classified information.

(d)(1) Executive compensation of the prime contractor. As a part of its annual registration requirement in the System for Award Management (SAM) database (FAR provision 52.204-7), the Contractor shall report the names and total compensation of each of the five most highly compensated executives for its preceding completed fiscal year, if—

(i) In the Contractor's preceding fiscal year, the Contractor received—

(A) 80 percent or more of its annual gross revenues from Federal contracts (and subcontracts), loans, grants (and subgrants), cooperative agreements, and other forms of Federal financial assistance; and

(B) $25,000,000 or more in annual gross revenues from Federal contracts (and subcontracts), loans, grants (and subgrants), cooperative agreements, and other forms of Federal financial assistance; and

(ii) The public does not have access to information about the compensation of the executives through periodic reports filed under section 13(a) or 15(d) of the Securities Exchange Act of 1934 (15 U.S.C. 78m(a), 78o(d)) or section 6104 of the Internal Revenue Code of 1986. (To determine if the public has access to the compensation information, see the U.S. Security and Exchange Commission total compensation filings at http://www.sec.gov/answers/execomp.htm.).

(2) First-tier subcontract information. Unless otherwise directed by the contracting officer, or as provided in paragraph (g) of this clause, by the end of the month following the month of award of a first-tier subcontract with a value of $30,000 or more, the Contractor shall report the following information at http://www.fsrs.gov for that first-tier subcontract. (The Contractor shall follow the instructions at http://www.fsrs.gov to report the data.)

(i) Unique identifier (DUNS Number) for the subcontractor receiving the award and for the subcontractor's parent company, if the subcontractor has a parent company.

(ii) Name of the subcontractor.

(iii) Amount of the subcontract award.

(iv) Date of the subcontract award.

(v) A description of the products or services (including construction) being provided under the subcontract, including the overall purpose and expected outcomes or results of the subcontract.

(vi) Subcontract number (the subcontract number assigned by the Contractor).

(vii) Subcontractor's physical address including street address, city, state, and country. Also

include the nine-digit zip code and congressional district.

(viii) Subcontractor's primary performance location including street address, city, state, and country. Also include the nine-digit zip code and congressional district.

(ix) The prime contract number, and order number if applicable.

(x) Awarding agency name and code.

(xi) Funding agency name and code.

(xii) Government contracting office code.

(xiii) Treasury account symbol (TAS) as reported in FPDS.

(xiv) The applicable North American Industry Classification System code (NAICS).

(3) Executive compensation of the first-tier subcontractor.
Unless otherwise directed by the Contracting Officer, by the end of the month following the month of award of a first-tier subcontract with a value of $30,000 or more, and annually thereafter (calculated from the prime contract award date), the Contractor shall report the names and total compensation of each of the five most highly compensated executives for that first-tier subcontractor for the first-tier subcontractor's preceding completed fiscal year at http://www.fsrs.gov, if—

(i) In the subcontractor's preceding fiscal year, the subcontractor received—

(A) 80 percent or more of its annual gross revenues from Federal contracts (and subcontracts), loans, grants (and subgrants), cooperative agreements, and other forms of Federal financial assistance; and

(B) $25,000,000 or more in annual gross revenues from Federal contracts (and subcontracts), loans, grants (and subgrants), cooperative agreements, and other forms of Federal financial assistance; and

(ii) The public does not have access to information about the compensation of the executives through periodic reports filed under section 13(a) or 15(d) of the Securities Exchange Act of 1934 (15 U.S.C. 78m(a), 78o(d)) or section 6104 of the Internal Revenue Code of 1986. (To determine if the public has access to the compensation information, see the U.S. Security and Exchange Commission total compensation filings at http://www.sec.gov/answers/execomp.htm.)

(e) The Contractor shall not split or break down first-tier subcontract awards to a value less than $30,000 to avoid the reporting requirements in paragraph (d) of this clause.

(f) The Contractor is required to report information on a first-tier subcontract covered by paragraph (d) when the subcontract is awarded. Continued reporting on the same subcontract is not required unless one of the reported data elements changes during the performance of the subcontract. The Contractor is not required to make further reports after the first-tier subcontract expires.

(g)(1) If the Contractor in the previous tax year had gross income, from all sources, under $300,000, the Contractor is exempt from the requirement to report subcontractor awards.

(2) If a subcontractor in the previous tax year had gross income from all sources under $300,000, the Contractor does not need to report awards for that subcontractor.

(h) The FSRS database at http://www.fsrs.gov will be prepopulated with some information from SAM and FPDS databases. If FPDS information is incorrect, the contractor should notify the contracting officer. If the SAM database information is incorrect, the contractor is responsible for correcting this information.

(End of clause)

Section 00700 - Contract Clauses

CONTRACT CLAUSES
CLAUSES INCORPORATED BY REFERENCE

52.202-1	Definitions	NOV 2013
52.204-7	System for Award Management	JUL 2013
52.204-13	System for Award Management Maintenance	JUL 2013
52.211-15	Defense Priority And Allocation Requirements	APR 2008
52.213-4	Terms and Conditions--Simplified Acquisitions (Other Than Commercial Items)	OCT 2015
52.219-6	Notice Of Total Small Business Set-Aside	NOV 2011
52.219-14	Limitations On Subcontracting	NOV 2011
52.222-1	Notice To The Government Of Labor Disputes	FEB 1997
52.222-3	Convict Labor	JUN 2003
52.222-5	Construction Wage Rate Requirements--Secondary Site of the Work	MAY 2014
52.222-6	Construction Wage Rate Requirements	MAY 2014
52.222-7	Withholding of Funds	MAY 2014
52.222-8	Payrolls and Basic Records	MAY 2014
52.222-9	Apprentices and Trainees	JUL 2005
52.222-10	Compliance with Copeland Act Requirements	FEB 1988
52.222-11	Subcontracts (Labor Standards)	MAY 2014
52.222-12	Contract Termination-Debarment	MAY 2014
52.222-13	Compliance With Construction Wage Rate Requirements and Related Regulations	MAY 2014
52.222-14	Disputes Concerning Labor Standards	FEB 1988
52.222-15	Certification of Eligibility	MAY 2014
52.222-21	Prohibition Of Segregated Facilities	APR 2015
52.222-26	Equal Opportunity	APR 2015
52.222-27	Affirmative Action Compliance Requirements for Construction	APR 2015
52.222-36	Equal Opportunity for Workers with Disabilities	JUL 2014
52.222-40	Notification of Employee Rights Under the National Labor Relations Act	DEC 2010
52.222-54	Employment Eligibility Verification	OCT 2015
52.223-5	Pollution Prevention and Right-to-Know Information	MAY 2011
52.223-6	Drug-Free Workplace	MAY 2001
52.223-9	Estimate of Percentage of Recovered Material Content for EPA-Designated Items	MAY 2008
52.223-12	Refrigeration Equipment and Air Conditioners	MAY 1995
52.223-18	Encouraging Contractor Policies To Ban Text Messaging While Driving	AUG 2011
52.225-13	Restrictions on Certain Foreign Purchases	JUN 2008
52.227-4	Patent Indemnity-Construction Contracts	DEC 2007
52.228-2	Additional Bond Security	OCT 1997
52.228-5	Insurance - Work On A Government Installation	JAN 1997
52.228-11	Pledges Of Assets	JAN 2012
52.228-12	Prospective Subcontractor Requests for Bonds	MAY 2014
52.228-14	Irrevocable Letter of Credit	NOV 2014
52.228-15	Performance and Payment Bonds--Construction	OCT 2010
52.229-3	Federal, State And Local Taxes	FEB 2013

52.229-4	Federal, State, And Local Taxes (State and Local Adjustments)	FEB 2013
52.232-5	Payments under Fixed-Price Construction Contracts	MAY 2014
52.232-16	Progress Payments	APR 2012
52.232-23 Alt I	Assignment of Claims (May 2014) - Alternate I	APR 1984
52.232-27	Prompt Payment for Construction Contracts	MAY 2014
52.232-33	Payment by Electronic Funds Transfer--System for Award Management	JUL 2013
52.232-36	Payment by Third Party	MAY 2014
52.232-39	Unenforceability of Unauthorized Obligations	JUN 2013
52.232-40	Providing Accelerated Payments to Small Business Subcontractors	DEC 2013
52.233-1 Alt I	Disputes (May 2014) - Alternate I	DEC 1991
52.233-3	Protest After Award	AUG 1996
52.233-4	Applicable Law for Breach of Contract Claim	OCT 2004
52.236-2	Differing Site Conditions	APR 1984
52.236-3	Site Investigation and Conditions Affecting the Work	APR 1984
52.236-5	Material and Workmanship	APR 1984
52.236-6	Superintendence by the Contractor	APR 1984
52.236-7	Permits and Responsibilities	NOV 1991
52.236-8	Other Contracts	APR 1984
52.236-9	Protection of Existing Vegetation, Structures, Equipment, Utilities, and Improvements	APR 1984
52.236-10	Operations and Storage Areas	APR 1984
52.236-11	Use and Possession Prior to Completion	APR 1984
52.236-12	Cleaning Up	APR 1984
52.236-13	Accident Prevention	NOV 1991
52.236-14	Availability and Use of Utility Services	APR 1984
52.236-15	Schedules for Construction Contracts	APR 1984
52.236-17	Layout of Work	APR 1984
52.236-21	Specifications and Drawings for Construction	FEB 1997
52.236-26	Preconstruction Conference	FEB 1995
52.242-14	Suspension of Work	APR 1984
52.243-5	Changes and Changed Conditions	APR 1984
52.246-12	Inspection of Construction	AUG 1996
52.246-21	Warranty of Construction	MAR 1994
52.249-2 Alt I	Termination for Convenience of the Government (Fixed-Price) (Apr 2012) - Alternate I	SEP 1996
52.249-10	Default (Fixed-Price Construction)	APR 1984
252.201-7000	Contracting Officer's Representative	DEC 1991
252.204-7003	Control Of Government Personnel Work Product	APR 1992
252.204-7006	Billing Instructions	OCT 2005
252.215-7003	Requirement for Submission of Data Other Than Certified Cost or Pricing Data--Canadian Commercial Corporation.	JUL 2012
252.223-7001	Hazard Warning Labels	DEC 1991
252.223-7006	Prohibition On Storage, Treatment, and Disposal of Toxic or Hazardous Materials	SEP 2014
252.225-7048	Export-Controlled Items	JUN 2013
252.227-7033	Rights in Shop Drawings	APR 1966
252.232-7003	Electronic Submission of Payment Requests and Receiving Reports	JUN 2012
252.232-7010	Levies on Contract Payments	DEC 2006
252.236-7000	Modification Proposals-Price Breakdown	DEC 1991
252.236-7001	Contract Drawings, and Specifications	AUG 2000

252.236-7005	Airfield Safety Precautions	DEC 1991
252.243-7001	Pricing Of Contract Modifications	DEC 1991
252.244-7000	Subcontracts for Commercial Items	JUN 2013
252.247-7023	Transportation of Supplies by Sea	APR 2014

CLAUSES INCORPORATED BY FULL TEXT

52.211-10 COMMENCEMENT, PROSECUTION, AND COMPLETION OF WORK (APR 1984)

The Contractor shall be required to (a) commence work under this contract within 90 calendar days after the date the Contractor receives the notice to proceed, (b) prosecute the work diligently, and (c) complete the entire work ready for use not later than the contract completion date. * The time stated for completion shall include final cleanup of the premises.

(End of clause)

52.211-14 NOTICE OF PRIORITY RATING FOR NATIONAL DEFENSE, EMERGENCY PREPAREDNESS, AND ENERGY PROGRAM USE (APR 2008)

Any contract awarded as a result of this solicitation will be DO-C2 rated order certified for national defense, emergency preparedness, and energy program use under the Defense Priorities and Allocations System (DPAS) (15 CFR 700), and the Contractor will be required to follow all of the requirements of this regulation.

(End of provision)

52.216-1 TYPE OF CONTRACT (APR 1984)

The Government contemplates award of a FIRM FIXED PRICE contract resulting from this solicitation.

(End of provision)

52.219-28 POST-AWARD SMALL BUSINESS PROGRAM REREPRESENTATION (JULY 2013)

(a) Definitions. As used in this clause--

Long-term contract means a contract of more than five years in duration, including options. However, the term does not include contracts that exceed five years in duration because the period of performance has been extended for a cumulative period not to exceed six months under the clause at 52.217-8, Option to Extend Services, or other appropriate authority.

Small business concern means a concern, including its affiliates, that is independently owned and operated, not dominant in the field of operation in which it is bidding on Government contracts, and qualified as a small business under the criteria in 13 CFR part 121 and the size standard in paragraph (c) of this clause. Such a concern is ``not dominant in its field of operation'' when it does not exercise a controlling or major influence on a national basis in a kind of business activity in which a number of business concerns are primarily engaged. In determining whether

dominance exists, consideration shall be given to all appropriate factors, including volume of business, number of employees, financial resources, competitive status or position, ownership or control of materials, processes, patents, license agreements, facilities, sales territory, and nature of business activity.

(b) If the Contractor represented that it was a small business concern prior to award of this contract, the Contractor shall rerepresent its size status according to paragraph (e) of this clause or, if applicable, paragraph (g) of this clause, upon the occurrence of any of the following:

(1) Within 30 days after execution of a novation agreement or within 30 days after modification of the contract to include this clause, if the novation agreement was executed prior to inclusion of this clause in the contract.

(2) Within 30 days after a merger or acquisition that does not require a novation or within 30 days after modification of the contract to include this clause, if the merger or acquisition occurred prior to inclusion of this clause in the contract.

(3) For long-term contracts--

(i) Within 60 to 120 days prior to the end of the fifth year of the contract; and

(ii) Within 60 to 120 days prior to the date specified in the contract for exercising any option thereafter.

(c) The Contractor shall rerepresent its size status in accordance with the size standard in effect at the time of this rerepresentation that corresponds to the North American Industry Classification System (NAICS) code assigned to this contract. The small business size standard corresponding to this NAICS code can be found at http://www.sba.gov/content/table-small-business-size-standards.

(d) The small business size standard for a Contractor providing a product which it does not manufacture itself, for a contract other than a construction or service contract, is 500 employees.

(e) Except as provided in paragraph (g) of this clause, the Contractor shall make the representation required by paragraph (b) of this clause by validating or updating all its representations in the Representations and Certifications section of the System for Award Management (SAM) and its other data in SAM, as necessary, to ensure that they reflect the Contractor's current status. The
Contractor shall notify the contracting office in writing within the timeframes specified in paragraph (b) of this clause that the data have been validated or updated, and provide the date of the validation or update.

(f) If the Contractor represented that it was other than a small business concern prior to award of this contract, the Contractor may, but is not required to, take the actions required by paragraphs (e) or (g) of this clause.

(g) If the Contractor does not have representations and certifications in SAM, or does not have a representation in SAM for the NAICS code applicable to this contract, the Contractor is required to complete the following rerepresentation and submit it to the contracting office, along with the contract number and the date on which the rerepresentation was completed:

The Contractor represents that it ( ) is, ( ) is not a small business concern under NAICS Code - assigned to contract number .

(Contractor to sign and date and insert authorized signer's name and title).

(End of clause)

52.222-23 NOTICE OF REQUIREMENT FOR AFFIRMATIVE ACTION TO ENSURE EQUAL EMPLOYMENT OPPORTUNITY FOR CONSTRUCTION (FEB 1999)

(a) The offeror's attention is called to the Equal Opportunity clause and the Affirmative Action Compliance Requirements for Construction clause of this solicitation.

(b) The goals for minority and female participation, expressed in percentage terms for the Contractor's aggregate workforce in each trade on all construction work in the covered area, are as follows:

Goals for minority participation for each trade	Goals for female participation for each trade
44.2%	6.9%

These goals are applicable to all the Contractor's construction work performed in the covered area. If the Contractor performs construction work in a geographical area located outside of the covered area, the Contractor shall apply the goals established for the geographical area where the work is actually performed. Goals are published periodically in the Federal Register in notice form, and these notices may be obtained from any Office of Federal Contract Compliance Programs office.

(c) The Contractor's compliance with Executive Order 11246, as amended, and the regulations in 41 CFR 60-4 shall be based on (1) its implementation of the Equal Opportunity clause, (2) specific affirmative action obligations required by the clause entitled "Affirmative Action Compliance Requirements for Construction," and (3) its efforts to meet the goals. The hours of minority and female employment and training must be substantially uniform throughout the length of the contract, and in each trade. The Contractor shall make a good faith effort to employ minorities and women evenly on each of its projects. The transfer of minority or female employees or trainees from Contractor to Contractor, or from project to project, for the sole purpose of meeting the Contractor's goals shall be a violation of the contract, Executive Order 11246, as amended, and the regulations in 41 CFR 60-4. Compliance with the goals will be measured against the total work hours performed.

(d) The Contractor shall provide written notification to the Deputy Assistant Secretary for Federal Contract Compliance, U.S. Department of Labor, within 10 working days following award of any construction subcontract in excess of $10,000 at any tier for construction work under the contract resulting from this solicitation. The notification shall list the --

(1) Name, address, and telephone number of the subcontractor;

(2) Employer's identification number of the subcontractor;

(3) Estimated dollar amount of the subcontract;

(4) Estimated starting and completion dates of the subcontract; and

(5) Geographical area in which the subcontract is to be performed.

(e) As used in this Notice, and in any contract resulting from this solicitation, the "covered area" is NUECES COUNTY, TX

(End of provision)

52.222-55 MINIMUM WAGES UNDER EXECUTIVE ORDER 13658 (DEC 2014)

(a) Definitions. As used in this clause--

``United States'' means the 50 states and the District of Columbia.

``Worker''--

(1) Means any person engaged in performing work on, or in connection with, a contract covered by Executive Order 13658, and

(i) Whose wages under such contract are governed by the Fair Labor Standards Act (29 U.S.C. chapter 8), the Service Contract Labor Standards statute (41 U.S.C. chapter 67), or the Wage Rate Requirements (Construction) statute (40 U.S.C. chapter 31, subchapter IV),

(ii) Other than individuals employed in a bona fide executive, administrative, or professional capacity, as those terms are defined in 29 CFR part 541,

(iii) Regardless of the contractual relationship alleged to exist between the individual and the employer.

(2) Includes workers performing on, or in connection with, the contract whose wages are calculated pursuant to special certificates issued under 29 U.S.C. 214(c).

(3) Also includes any person working on, or in connection with, the contract and individually registered in a bona fide apprenticeship or training program registered with the Department of Labor's Employment and Training Administration, Office of Apprenticeship, or with a State Apprenticeship Agency recognized by the Office of Apprenticeship.

(b) Executive Order Minimum Wage rate. (1) The Contractor shall pay to workers, while performing in the United States, and performing on, or in connection with, this contract, a minimum hourly wage rate of $10.10 per hour beginning January 1, 2015.

(2) The Contractor shall adjust the minimum wage paid, if necessary, beginning January 1, 2016 and annually thereafter, to meet the Secretary of Labor's annual E.O. minimum wage. The Administrator of the Department of Labor's Wage and Hour Division (the Administrator) will publish annual determinations in the Federal Register no later than 90 days before the effective date of the new E.O. minimum wage rate. The Administrator will also publish the applicable E.O. minimum wage on www.wdol.gov (or any successor Web site) and on all wage determinations issued under the Service Contract Labor Standards statute or the Wage Rate Requirements (Construction) statute. The applicable published E.O. minimum wage is incorporated by reference into this contract.

(3)(i) The Contractor may request a price adjustment only after the effective date of the new annual E.O. minimum wage determination. Prices will be adjusted only if labor costs increase as a result of an increase in the annual E.O. minimum wage, and for associated labor costs and relevant subcontract costs. Associated labor costs shall include increases or decreases that result from changes in social security and unemployment taxes and workers' compensation insurance, but will not otherwise include any amount for general and administrative costs, overhead, or profit.

(ii) Subcontractors may be entitled to adjustments due to the new minimum wage, pursuant to paragraph (b)(2). Contractors shall consider any subcontractor requests for such price adjustment.

(iii) The Contracting Officer will not adjust the contract price under this clause for any costs other than those identified in paragraph (b)(3)(i) of this clause, and will not provideduplicate price adjustments with any price adjustment under clauses implementing the Service Contract Labor Standards statute or the Wage Rate Requirements (Construction) statute.

(4) The Contractor warrants that the prices in this contract do not include allowance for any contingency to cover increased costs for which adjustment is provided under this clause.

(5) A pay period under this clause may not be longer than semi-monthly, but may be shorter to comply with any applicable law or other requirement under this contract establishing a shorter pay period. Workers shall be paid no later than one pay period following the end of the regular pay period in which such wages were earned or accrued.

(6) The Contractor shall pay, unconditionally to each worker, all wages due free and clear without subsequent rebate or kickback. The Contractor may make deductions that reduce a worker's wages below the E.O. minimum wage rate only if done in accordance with 29 CFR 10.23, Deductions.

(7) The Contractor shall not discharge any part of its minimum wage obligation under this clause by furnishing fringe benefits or, with respect to workers whose wages are governed by the Service Contract Labor Standards statute, the cash equivalent thereof.

(8) Nothing in this clause shall excuse the Contractor from compliance with any applicable Federal or State prevailing wage law or any applicable law or municipal ordinance establishing a minimum wage higher than the E.O. minimum wage. However, wage increases under such other laws or municipal ordinances are not subject to price adjustment under this subpart.

(9) The Contractor shall pay the E.O. minimum wage rate whenever it is higher than any applicable collective bargaining agreement(s) wage rate.

(10) The Contractor shall follow the policies and procedures in 29 CFR 10.24(b) and 10.28 for treatment of workers engaged in an occupation in which they customarily and regularly receive more than $30 a month in tips.

(c)(1) This clause applies to workers as defined in paragraph (a). As provided in that definition--

(i) Workers are covered regardless of the contractual relationship alleged to exist between the contractor or subcontractor and the worker;

(ii) Workers with disabilities whose wages are calculated pursuant to special certificates issued under 29 U.S.C. 214(c) are covered; and

(iii) Workers who are registered in a bona fide apprenticeship program or training program registered with the Department of Labor's Employment and Training Administration, Office of Apprenticeship, or with a State Apprenticeship Agency recognized by the Office of Apprenticeship, are covered.

(2) This clause does not apply to--

(i) Fair Labor Standards Act (FLSA)-covered individuals performing in connection with contracts covered by the E.O., i.e. those individuals who perform duties necessary to the performance of the contract, but who are not directly engaged in performing the specific work called for by the contract, and who spend less than 20 percent of their hours worked in a particular workweek performing in connection with such contracts;

(ii) Individuals exempted from the minimum wage requirements of the FLSA under 29 U.S.C. 213(a) and 214(a) and (b), unless otherwise covered by the Service Contract Labor Standards statute, or the Wage Rate Requirements (Construction) statute. These individuals include but are not limited to--

(A) Learners, apprentices, or messengers whose wages are calculated pursuant to special certificates issued under 29 U.S.C. 214(a).

(B) Students whose wages are calculated pursuant to special certificates issued under 29 U.S.C. 214(b).

(C) Those employed in a bona fide executive, administrative, or professional capacity (29 U.S.C. 213(a)(1) and 29 CFR part 541).

(d) Notice. The Contractor shall notify all workers performing work on, or in connection with, this contract of the applicable E.O. minimum wage rate under this clause. With respect to workers covered by the Service Contract Labor Standards statute or the Wage Rate Requirements (Construction) statute, the Contractor may meet this requirement by posting, in a prominent and accessible place at the worksite, the applicable wage determination under those statutes. With respect to workers whose wages are governed by the FLSA, the Contractor shall post notice, utilizing the poster provided by the Administrator, which can be obtained at www.dol.gov/whd/govcontracts, in a prominent and accessible place at the worksite. Contractors that customarily post notices to workers electronically may post the notice electronically provided the electronic posting is displayed prominently on any Web site that is maintained by the contractor, whether external or internal, and customarily used for notices to workers about terms and conditions of employment.

(e) Payroll Records. (1) The Contractor shall make and maintain records, for three years after completion of the work, containing the following information for each worker:

(i) Name, address, and social security number;

(ii) The worker's occupation(s) or classification(s);

(iii) The rate or rates of wages paid;

(iv) The number of daily and weekly hours worked by each worker;

(v) Any deductions made; and

(vi) Total wages paid.

(2) The Contractor shall make records pursuant to paragraph (e)(1) of this clause available for inspection and transcription by authorized representatives of the Administrator. The Contractor shall also make such records available upon request of the Contracting Officer.

(3) The Contractor shall make a copy of the contract available, as applicable, for inspection or transcription by authorized representatives of the Administrator.

(4) Failure to comply with this paragraph (e) shall be a violation of 29 CFR 10.26 and this contract. Upon direction of the Administrator or upon the Contracting Officer's own action, payment shall be withheld until such time as the noncompliance is corrected.

(5) Nothing in this clause limits or otherwise modifies the Contractor's payroll and recordkeeping obligations, if any, under the Service Contract Labor Standards statute, the Wage Rate Requirements (Construction) statute, the Fair Labor Standards Act, or any other applicable law.

(f) Access. The Contractor shall permit authorized representatives of the Administrator to conduct investigations, including interviewing workers at the worksite during normal working hours.

(g) Withholding. The Contracting Officer, upon his or her own action or upon written request of the Administrator, will withhold funds or cause funds to be withheld, from the Contractor under this or any other Federal contract with the same Contractor, sufficient to pay workers the full amount of wages required by this clause.

(h) Disputes. Department of Labor has set forth in 29 CFR 10.51, Disputes concerning contractor compliance, the procedures for resolving disputes concerning a contractor's compliance with Department of Labor regulations at 29 CFR part 10. Such disputes shall be resolved in accordance with those procedures and not the Disputes clause of this contract. These disputes include disputes between the Contractor (or any of its subcontractors) and the contracting agency, the Department of Labor, or the workers or their representatives.

(i) Antiretaliation. The Contractor shall not discharge or in any other manner discriminate against any worker because such worker has filed any complaint or instituted or caused to be instituted any proceeding under or related to compliance with the E.O. or this clause, or has testified or is about to testify in any such proceeding.

(j) Subcontractor compliance. The Contractor is responsible for subcontractor compliance with the requirements of this clause and may be held liable for unpaid wages due subcontractor workers.

(k) Subcontracts. The Contractor shall include the substance of this clause, including this paragraph (k) in all subcontracts, regardless of dollar value, that are subject to the Service Contract Labor Standards statute or the Wage Rate Requirements (Construction) statute, and are to be performed in whole or in part in the United States.

(End of clause)

52.225-9 BUY AMERICAN—CONSTRUCTION MATERIALS (MAY 2014)

(a) Definitions. As used in this clause--

Commercially available off-the-shelf (COTS) item—

(1) Means any item of supply (including construction material) that is--

(i) A commercial item (as defined in paragraph (1) of the definition at FAR 2.101);

(ii) Sold in substantial quantities in the commercial marketplace; and

(iii) Offered to the Government, under a contract or subcontract at any tier, without modification, in the same form in which it is sold in the commercial marketplace; and

(2) Does not include bulk cargo, as defined in 46 U.S.C. 40102(4) such as agricultural products and petroleum products.

Component means an article, material, or supply incorporated directly into a construction material.

Construction material means an article, material, or supply brought to the construction site by the Contractor or a subcontractor for incorporation into the building or work. The term also includes an item brought to the site preassembled from articles, materials, or supplies. However, emergency life safety systems, such as emergency lighting, fire alarm, and audio evacuation systems, that are discrete systems incorporated into a public building or work and that are produced as complete systems, are evaluated as a single and distinct construction material regardless of when or how the individual parts or components of those systems are delivered to the construction site. Materials purchased directly by the Government are supplies, not construction material.

Cost of components means--

(1) For components purchased by the Contractor, the acquisition cost, including transportation costs to the place of incorporation into the construction material (whether or not such costs are paid to a domestic firm), and any applicable duty (whether or not a duty-free entry certificate is issued); or

(2) For components manufactured by the Contractor, all costs associated with the manufacture of the component, including transportation costs as described in paragraph (1) of this definition, plus allocable overhead costs, but excluding profit. Cost of components does not include any costs associated with the manufacture of the construction material.

Domestic construction material means--

(1) An unmanufactured construction material mined or produced in the United States;

(2) A construction material manufactured in the United States, if--

(i) The cost of its components mined, produced, or manufactured in the United States exceeds 50 percent of the cost of all its components. Components of foreign origin of the same class or kind for which nonavailability determinations have been made are treated as domestic; or

(ii) The construction material is a COTS item.

Foreign construction material means a construction material other than a domestic construction material.

United States means the 50 States, the District of Columbia, and outlying areas.

(b) Domestic preference.

(1) This clause implements 41 U.S.C. chapter 83, Buy American, by providing a preference for domestic construction material. In accordance with 41 U.S.C. 1907, the component test of the Buy American statute is waived for construction material that is a COTS item. (See FAR 12.505(a)(2)). The Contractor shall use only domestic construction material in performing this contract, except as provided in paragraphs (b)(2) and (b)(3) of this clause.

(2) This requirement does not apply to information technology that is a commercial item or to the construction materials or components listed by the Government as follows:

(3) The Contracting Officer may add other foreign construction material to the list in paragraph (b)(2) of this clause if the Government determines that

(i) The cost of domestic construction material would be unreasonable. The cost of a particular domestic construction material subject to the requirements of the Buy American Act is unreasonable when the cost of such material exceeds the cost of foreign material by more than 6 percent;

(ii) The application of the restriction of the Buy American Act to a particular construction material would be impracticable or inconsistent with the public interest; or

(iii) The construction material is not mined, produced, or manufactured in the United States in sufficient and reasonably available commercial quantities of a satisfactory quality.

(c) Request for determination of inapplicability of the Buy American Act. (1)(i) Any Contractor request to use foreign construction material in accordance with paragraph (b)(3) of this clause shall include adequate information for Government evaluation of the request, including--

(A) A description of the foreign and domestic construction materials;

(B) Unit of measure;

(C) Quantity;

(D) Price;

(E) Time of delivery or availability;

(F) Location of the construction project;

(G) Name and address of the proposed supplier; and

(H) A detailed justification of the reason for use of foreign construction materials cited in accordance with paragraph (b)(3) of this clause.

(ii) A request based on unreasonable cost shall include a reasonable survey of the market and a completed price comparison table in the format in paragraph (d) of this clause.

(iii) The price of construction material shall include all delivery costs to the construction site and any applicable duty (whether or not a duty-free certificate may be issued).

(iv) Any Contractor request for a determination submitted after contract award shall explain why the Contractor could not reasonably foresee the need for such determination and could not have requested the determination before contract award. If the Contractor does not submit a satisfactory explanation, the Contracting Officer need not make a determination.

(2) If the Government determines after contract award that an exception to the Buy American statute applies and the Contracting Officer and the Contractor negotiate adequate consideration, the Contracting Officer will modify the contract to allow use of the foreign construction material. However, when the basis for the exception is the unreasonable price of a domestic construction material, adequate consideration is not less than the differential established in paragraph (b)(3)(i) of this clause.

(3) Unless the Government determines that an exception to the Buy American statute applies, use of foreign construction material is noncompliant with the Buy American statute.

(d) Data. To permit evaluation of requests under paragraph (c) of this clause based on unreasonable cost, the Contractor shall include the following information and any applicable supporting data based on the survey of suppliers:

Foreign and Domestic Construction Materials Price Comparison

Construction material description	Unit of measure	Quantity	Price (dollars) \1\
Item 1			
Foreign construction material....	..... ___	.... …… ___	.... ___ .....
Domestic construction material...	..... ___	.... ___	.... ___ .....
Item 2			
Foreign construction material....	..... ___	.... …… ___	.... ___ .....
Domestic construction material...	..... ___	.... ___	.... ___ .....

Include all delivery costs to the construction site and any applicable duty (whether or not a duty-free entry certificate is issued).

List name, address, telephone number, and contact for suppliers surveyed. Attach copy of response; if oral, attach summary.
Include other applicable supporting information.

(End of clause)

52.225-10 NOTICE OF BUY AMERICAN REQUIREMENT--CONSTRUCTION MATERIALS (MAY 2014)

(a) Definitions. “Commercially available off-the-shelf (COTS) item,” “construction material,” “domestic construction material,” and “foreign construction material,” as used in this provision, are defined in the clause of this solicitation entitled “Buy American --Construction Materials” (Federal Acquisition Regulation (FAR) clause 52.225-9).

(b) Requests for determinations of inapplicability. An offeror requesting a determination regarding the inapplicability of the Buy American statute should submit the request to the Contracting Officer in time to allow a determination before submission of offers. The offeror shall include the information and applicable supporting data required by paragraphs (c) and (d) of the clause at FAR 52.225-9 in the request. If an offeror has not requested a determination regarding the inapplicability of the Buy American statute before submitting its offer, or has not received a response to a previous request, the offeror shall include the information and supporting data in the offer.

(c) Evaluation of offers. (1) The Government will evaluate an offer requesting exception to the requirements of the Buy American statute, based on claimed unreasonable cost of domestic construction material, by adding to the offered price the appropriate percentage of the cost of such foreign construction material, as specified in paragraph (b)(3)(i) of the clause at FAR 52.225-9.

(2) If evaluation results in a tie between an offeror that requested the substitution of foreign construction material based on unreasonable cost and an offeror that did not request an exception, the Contracting Officer will award to the offeror that did not request an exception based on unreasonable cost.

(d) Alternate offers.

(1) When an offer includes foreign construction material not listed by the Government in this solicitation in paragraph (b)(2) of the clause at FAR 52.225-9, the offeror also may submit an alternate offer based on use of equivalent domestic construction material.

(2) If an alternate offer is submitted, the offeror shall submit a separate Standard Form 1442 for the alternate offer, and a separate price comparison table prepared in accordance with paragraphs (c) and (d) of the clause at FAR 52.225-9 for the offer that is based on the use of any foreign construction material for which the Government has not yet determined an exception applies.

(3) If the Government determines that a particular exception requested in accordance with paragraph (c) of the clause at FAR 52.225-9 does not apply, the Government will evaluate only those offers based on use of the equivalent domestic construction material, and the offeror shall be required to furnish such domestic construction material. An offer based on use of the foreign construction material for which an exception was requested--

(i) Will be rejected as nonresponsive if this acquisition is conducted by sealed bidding; or

(ii) May be accepted if revised during negotiations.

(End of provision)

52.228-13 ALTERNATIVE PAYMENT PROTECTIONS (JULY 2000)

(a) The Contractor shall submit one of the following payment protections:

PAYMENT BOND OR IRREVOCABLE LETTER OF CREDIT

(b) The amount of the payment protection shall be 100 percent of the contract price.

(c) The submission of the payment protection is required within 15 days of contract award.

(d) The payment protection shall provide protection for the full contract performance period plus a one-year period.

(e) Except for escrow agreements and payment bonds, which provide their own protection procedures, the Contracting Officer is authorized to access funds under the payment protection when it has been alleged in writing by a supplier of labor or material that a nonpayment has occurred, and to withhold such funds pending resolution by administrative or judicial proceedings or mutual agreement of the parties.

(f) When a tripartite escrow agreement is used, the Contractor shall utilize only suppliers of labor and material that signed the escrow agreement.

(End of clause)

52.236-27 SITE VISIT (CONSTRUCTION) (FEB 1995)

(a) The clauses at 52.236-2, Differing Site Conditions, and 52.236-3, Site Investigations and Conditions Affecting the Work, will be included in any contract awarded as a result of this solicitation. Accordingly, offerors or quoters are urged and expected to inspect the site where the work will be performed.

(b) Site visits may be arranged during normal duty hours by contacting:
SEE SOLICITATION PAGE 3

(End of provision)

52.252-2 CLAUSES INCORPORATED BY REFERENCE (FEB 1998)

This contract incorporates one or more clauses by reference, with the same force and effect as if they were given in full text. Upon request, the Contracting Officer will make their full text available. Also, the full text of a clause may be accessed electronically at this/these address(es):

FAR: https://farsite.hill.af.mil; http://www.arnet.gov/far;
DFARS: http://www.acq.osd.mil/dpap/dars/index.html
NMCARS: http://acquisition.navy.mil/policy_and_guidance/nmcars_nmcag
NFAS: http://acq.navfac.navy.mil

(End of clause)

FAC 5252.201-9300 CONTRACTING OFFICER AUTHORITY (JUN 1994)

In no event shall any understanding or agreement between the Contractor and any Government employee other than the Contracting Officer on any contract, modification, change order, letter or verbal direction to the Contractor be effective or binding upon the Government. All such actions must be formalized by a proper contractual document executed by an appointed Contracting Officer. The Contractor is hereby put on notice that in the event a change in work to be performed or increases in the scope of the work to be performed, it is the Contractor's responsibility to make inquiry of the Contracting Officer before making the deviation. Payments will not be made without being authorized by an appointed Contracting Officer with the legal authority to bind the Government.

FAC 5252.209-9300 ORGANIZATIONAL CONFLICTS OF INTEREST (JUN 1994)

The restrictions described herein shall apply to the Contractor and its affiliates, consultants and subcontractors under this contract. If the Contractor under this contract prepares or assists in preparing a statement of work, specifications and plans, the Contractor and its affiliates shall be ineligible to bid or participate, in any capacity, in any contractual effort which is based on such statement of work or specifications and plans as a prime contractor, subcontractor, consultant or in any similar capacity. The Contractor shall not incorporate its products or services in such statement of work or specification unless so directed in writing by the Contracting Officer, in which case the restriction shall not apply. This contract shall include this clause in its subcontractors' or consultants' agreements concerning the performance of this contract.

FAC 5252.228-9300 INDIVIDUAL SURETY/SURETIES (JUN 1994)

As prescribed in FAR 28.203(a), individual sureties will be permitted. In order for the Contracting Officer to make a determination as to the acceptability of individuals proposed as sureties, as prescribed in FAR 28-203(b), all proposers who submit bonds which are executed by individual sureties are requested to furnish additional information in support of SF-28, Affidavit of Individual Surety, with the bonds. Pursuant to Instruction 3(b) of Standard Form 24, the Bond, Standard Form 25, the Performance Bond, and the Standard Form 25A, the Payment Bond, the Contracting Officer requests the following information:

(a) Equity Securities (Stock):

(1) State the place(s) of incorporation and address of the principal place of business for each issuing corporation listed.

(2) State whether the security issued was issued by public or private offering and give the place of registration of the security.

(3) State whether the security is presently, actively traded.

(b) Debt Securities (Bonds) and Certificates of Deposit:

(1) List the type of bonds held and their maturity dates.

(2) State the name, address, and telephone number of the issuing agency, firm or individual.

(3) State the complete address(es) where the bonds are held.

(4) State whether the bonds have been pledged as security or have otherwise been encumbered.

(c) Real Property Interests:

(1) Provide complete recording data for the conveyance of each parcel or interest listed to the individual proposed as surety.

(2) State whether the values listed are based upon personal evaluation or evaluation of an experienced real estate appraiser. If available, provide copies of written appraisals.

(3) State the method(s) of valuation upon which appraisal is based.

(4) Provide the assessed value of each property interest listed utilized by the appropriate tax assessor for purposes of property taxation.

(5) Provide the telephone number, including area code, for the tax assessor who performed the most recent tax assessment.

(6) State whether each real property interest listed is currently under lien or in any way encumbered and the dollar amount of each such lien or encumbrance.

(d) Persons Proposed as Individual Sureties:

(1) A current list of all other bonds (bid, performance, and payment) on which the individual is a surety and bonds for which the individual is requesting to be a surety.

(2) A statement as to the percent of completion of projects for which the individual is bound on a performance bond.

This information is necessary to enable the Contracting Officer to evaluate the sufficiency of the surety's net worth in a timely manner.

5252.232-9301 INVOICING PROCEDURES ELECTRONIC (NOV 2009)

(a) In accordance with DFARS Clause 252.232-7003 titled "Electronic Submission of Payment Requests", this contract/order requires use of the DoD Wide Area Workflow (WAWF) system for the submission of invoices. This web-based system, located at https://wawf.eb.mil, provides the technology for Government contractors and authorized Department of Defense (DoD) personnel to generate, capture and process receipt and payment-related documentation in a paperless environment. Invoices rendered under this contract shall be submitted electronically through WAWF. Submission of hard copy DD250/invoices will no longer be accepted for payment.

(b) It is recommended that the person in your company designated as the Central Contractor Registration (CCR) Electronic Business Point of Contact (EBPOC), and anyone responsible for the submission of invoices, use the online training system for WAWF at http://wawftraining.com. The Vendor, Group Administrator (GAM), and sections marked with an asterisk in the training system should be reviewed.

Additional Vendor information is also available at http://acquisition.navy.mil/rda/home/acquisition_one_source/ebusiness/don_ebusiness_solutions/wawf_overview/vendor_information. Here you will find information on "Getting Started" as well as “Quick Reference Guides".

(c) Within ten (10) days after award, the designated CCR EBPOC is responsible for activating the company's CAGE code in WAWF by calling 1-866-618-5988 for the DISA WAWF Helpdesk, email address cscassig@csd.disa.mil. Once the company’s CAGE code is activated, the CCR EBPOC must self-register under the company's CAGE code on WAWF and follow the instructions for a group administrator. After the company is set-up on WAWF, any additional persons responsible for submitting invoices must self-register under the company's CAGE code at https://wawf.eb.mil.

(d) The contractor shall use the following document type, DODAAC codes with corresponding extensions, and inspection and acceptance locations when submitting invoices in WAWF:

SEE WAWF CLAUSE

Note: Supporting documentation must be attached. File names cannot contain spaces or special characters, except underscore "_" which is an acceptable character. There is NO maximum to the number of files that can be attached to an invoice, however EACH file is limited to a maximum file size UNDER 2 megabytes.

(e) Before closing out of an invoice session in WAWF, but after submitting the document(s), you will be prompted to "Send More Email Notifications." Select "Send More Email Notification" and add additional email addresses noted above in the first email address blocks. This additional notification to the Government is important to ensure that the specific acceptor/receiver is aware the invoice documents have been submitted into WAWF.

(f) If you have any questions regarding WAWF, please contact the WAWF DFAS helpdesk at 877-251-WAWF (9293) or email address of CCL-EC-Navy-WAWF-helpdesk@dfas.mil, or the NAVFAC WAWF point of contact identified above in section (d). (End of clause)

FAC 5252.236-9301 SPECIAL WORKING CONDITIONS AND ENTRY TO WORK AREA(JUN 1994)

Denial of entry to the work areas under this contract may be required by the Government under certain circumstances where the Contractor's work or presence would constitute a safety or security hazard to ordnance storage or handling operations. Restrictions covering entry to and availability of the work areas are as follows:

a. Entry. Entry to work areas located within the special Security Limited areas, defined as those work areas located within the existing security fence, can be granted subject to special personnel requirements as specified herein and to other normal security and safety requirements. Complete denial of entry to the Limited Area may be required during brief periods of one to two hours (normally) and on rare occasions of two to four hours. For bidding purposes, the Contractor shall assume denial of entry to the work areas in the Limited Area of six 2-hour denials and one 4-hour denial per month.

b. Vehicle Delay. The Contractor shall also assume for bidding purposes that, in addition to site denial, each vehicle and/or unit of construction equipment will be delayed during each movement through the security gate, both entering and leaving the limited area. Delays will average 1 HR.

Operational Considerations. To reduce delay time while preserving required security, the following points should be considered in operational planning:

a. Vehicle Search. Security regulations required that all vehicles, when authorized to enter the Limited Area be thoroughly searched by guard force personnel. Such a search will be required for all vehicle/ construction equipment. Accordingly, once a vehicle or unit of construction equipment has been cleared, it may be left in the Limited Area after initial entry has been made. For the period of time authorized the vehicle/equipment left in the Limited Area will be assigned parking areas by the Contracting Officer. The vehicle/equipment must be secured as specified in paragraph entitled "SECURITY REQUIREMENTS." The intent is to reduce the Contractor loss of time at the security gate. No private vehicles will be allowed to enter the Limited Area.

b. Delivery Vehicles. Vehicles delivering construction materials will be inspected by guard force personnel while the driver is being processed for entry into the Limited Area. The driver and vehicle will then be escorted in the Limited Area by a Security Escort. To provide this service, delivery schedules should be promulgated in advance and vendors made aware that a reasonable delay can be expected if delivery is other than the time specified. Deliveries after 1600 hours will not be allowed entry into the Limited Area without prior approval of the Physical Security Officer.

FAC 5252.236-9303 ACCIDENT PREVENTION (NOV 1998)

(a) The Contractor will maintain an accurate record of, and will report to the Contracting Officer in the manner and on the forms prescribed by the Contracting Officer, all accidents resulting in death, traumatic injury, occupational disease, and damage to property, materials, supplies and equipment incident to work performed under this contract.

(b) Compliance with the provisions of this article by subcontractors will be the responsibility of the Contractor.

(c) Prior to commencement of the work, the Contractor may be required to:

(1) submit in writing his proposals for effectuating provision for accident prevention;

(2) meet in conference with representatives of the Contracting Officer to discuss and develop mutual understandings relative to administration of the overall safety program.

5252.236-9310 - RECORD DRAWINGS (OCT 2004)

The Contractor shall maintain at the job site two sets of full-size prints of the contract drawings, accurately marked in red with adequate dimensions, to show all variations between the construction actually provided and that indicated or specified in the contract documents, including buried or concealed construction. Special attention shall be given to recording the horizontal and vertical location of all buried utilities that differ from the final government-accepted drawings. Existing utility lines and features revealed during the course of construction, shall also be accurately located and dimensioned. Variations in the interior utility systems shall be clearly defined and dimensioned; and coordinated with exterior utility connections at the building five-foot line, where applicable. Existing topographic features which differ from those shown on the contract drawings shall also be accurately located and recorded. Where a choice of materials or methods is permitted herein, or where variations in scope or character of methods is permitted herein, or where variations in scope or character of work from that of the original contract are authorized, the drawings shall be marked to define the construction actually provided. The representations of such changes shall conform to standard drafting practice and shall include such supplementary notes, legends, and details as necessary to clearly portray the as-built construction. These drawings shall be available for review by the Contracting Officer at all times. Upon completion of the work, both sets of the marked up prints shall be certified as correct, signed by the Contractor, and delivered to the Contracting Officer for his approval before acceptance. Requests for partial payments will not be approved if the marked prints are not kept current, and request for final payment will not be approved until the marked prints are delivered to the Contracting Officer. (End of clause)

FAC 5252.245-9302 LIMITED ASSUMPTION OF RISK BY GOVERNMENT (JUN 1994)

(a) Title of all work in place shall be in the Government, and title to all property intended for incorporation in the work shall vest in the Government upon delivery thereof to the site of the work. The term "Government-owned property" as used in this clause refers to such work in place and to such other property as to which title has vested in the Government and includes any property furnished or rented to the Contractor by the Government. Upon completion of the work, any such Government-owned property not a part of the work (except property rented to, or furnished without charge to the contractor by the Government) shall become the property of the Contractor. The vesting of title in the Government, as provided in this paragraph, shall in no way relieve the Contractor of any obligations otherwise provided in this contract in respect to such Government-owned property except as expressly stated in paragraph (b) of this clause.

(b) The Contractor represents that the contract price does not include the cost of insurance, nor any provision for a reserve, covering the risk assumed by the Government under this paragraph.

The Government assumes the risk of loss or damage to such Government-owned property (including expenses incidental to such loss or damage) which results directly or indirectly from the explosion of Government-owned or controlled munitions (including, without limitations, ammunition, bombs, powder, dynamite and other explosives), whether or not caused by negligence, except that the Government does not assume at any time the risk of, and the Contractor shall be responsible for, such loss or damage (1) which is in fact covered by insurance or for which contractor is otherwise reimbursed, or (2) which results from disregard of proper instructions of the Contracting Officer, on the part of any of the Contractor's directors, officers or any other representatives having supervision or direction of all or substantially all the Contractor's operations under this contract.

(c) In the event of loss or damage to Government-owned property resulting from the risk assumed by the Government hereunder, the Contracting Officer shall determine whether, and to what extent, such property shall be rebuilt, repaired or replaced by the Contractor or otherwise. Should this determination cause an increase or decrease in the cost of doing the work under this contract or time required for its performance, an equitable adjustment shall be made as provided in the changes clause of the contract.

(d) The provisions contained in the statement of work under "Permits and Responsibilities," are to be deemed modified by this clause only to the extent required to give effect to the limited assumption of risk provided in this clause.

Section 00800 - Special Contract Requirements

252.232-7006 WAWF
252.232-7006 WIDE AREA WORKFLOW PAYMENT INSTRUCTIONS (MAY 2013)

(a) Definitions. As used in this clause--

Department of Defense Activity Address Code (DoDAAC) is a six position code that uniquely identifies a unit, activity, or organization.

Document type means the type of payment request or receiving report available for creation in Wide Area WorkFlow (WAWF).

Local processing office (LPO) is the office responsible for payment certification when payment certification is done external to the entitlement system.

(b) Electronic invoicing. The WAWF system is the method to electronically process vendor payment requests and receiving reports, as authorized by DFARS 252.232-7003, Electronic Submission of Payment Requests and Receiving Reports.

(c) WAWF access. To access WAWF, the Contractor shall--

(1) Have a designated electronic business point of contact in the System for Award Management at https://www.acquisition.gov; and

(2) Be registered to use WAWF at https://wawf.eb.mil/ following the step-by-step procedures for self-registration available at this Web site.

(d) WAWF training. The Contractor should follow the training instructions of the WAWF Web-Based Training Course and use the Practice Training Site before submitting payment requests through WAWF. Both can be accessed by selecting the “Web Based Training” link on the WAWF home page at https://wawf.eb.mil/.

(e) WAWF methods of document submission. Document submissions may be via Web entry, Electronic Data Interchange, or File Transfer Protocol.

(f) WAWF payment instructions. The Contractor must use the following information when submitting payment requests and receiving reports in WAWF for this contract/order:
Contract number, typically in the form N69450-14-M-1234, for example.

(1) Document type. The Contractor shall use the following document type(s).
Naval Construction/Facilities Management Invoice

(2) Inspection/acceptance location. The Contractor shall select the following inspection/acceptance location(s) in WAWF, as specified by the contracting officer.

Inspection – N44215

Acceptance – N44215

(3) Document routing. The Contractor shall use the information in the Routing Data Table below only to fill in applicable fields in WAWF when creating payment requests and receiving reports in the system.

Routing Data Table*

Field Name in WAWF	Data to be entered in WAWF
Pay Official DoDAAC	N68732
Issue By DoDAAC	N69450
Admin DoDAAC	N44215
Inspect By DoDAAC	N44215
Ship To Code	N/A
Ship From Code	N/A
Mark For Code	N/A
Service Approver (DoDAAC)	N/A
Service Acceptor (DoDAAC)	N/A
Accept at Other DoDAAC	N/A
LPO DoDAAC	N44215
DCAA Auditor DoDAAC	N/A
Other DoDAAC(s)	N/A

(4) Payment request and supporting documentation. The Contractor shall ensure a payment request includes appropriate contract line item and subline item descriptions of the work performed or supplies delivered, unit price/cost per unit, fee (if applicable), and all relevant back-up documentation, as defined in DFARS Appendix F, (e.g. timesheets) in support of each payment request.

(5) WAWF email notifications. The Contractor shall enter the email address identified below in the “Send Additional Email Notifications” field of WAWF once a document is submitted in the system.
joel.overson@navy.mil

(6) WAWF point of contact. (1) The Contractor may obtain clarification regarding invoicing in WAWF from the following contracting activity's WAWF point of contact.

WAWF Technician: Dana Villarreal (361)516-6210 dana.villarreal@navy.mil
Contracting Officer: Joel Overson (361)961-3397 joel.overson@navy.mil

(2) For technical WAWF help, contact the WAWF helpdesk at 866-618-5988.
(End of clause)

WAGE DETERMINATION
General Decision Number: TX160342 01/08/2016 TX342

Superseded General Decision Number: TX20150342

State: Texas

Construction Type: Building

Counties: Aransas, Nueces and San Patricio Counties in Texas.

BUILDING CONSTRUCTION PROJECTS (does not include single family homes or apartments up to and including 4 stories).

Note: Under Executive Order (EO) 13658, an hourly minimum wage of $10.15 for calendar year 2016 applies to all contracts subject to the Davis-Bacon Act for which the solicitation was issued on or after January 1, 2015. If this contract is covered by the EO, the contractor must pay all workers in any classification listed on this wage determination at least $10.15 (or the applicable wage rate listed on this wage determination, if it is higher) for all hours spent performing on the contract in calendar year 2016. The EO minimum wage rate will be adjusted annually. Additional information on contractor requirements and worker protections under the EO is available at www.dol.gov/whd/govcontracts.

Modification Number	Publication Date
0	01/08/2016

BOIL0074-003 01/01/2014

	Rates	Fringes
BOILERMAKER	$ 23.14	21.55

ELEC0278-002 08/30/2015

	Rates	Fringes
ELECTRICIAN	$ 25.00	7.70

ENGI0178-005 06/01/2014

	Rates	Fringes
POWER EQUIPMENT OPERATOR		
(1) Tower Crane	$ 29.00	10.60
(2) Cranes with Pile Driving or Caisson Attachment and Hydraulic Crane 60 tons and above	$ 28.75	10.60

(3) Hydraulic cranes 59
Tons and under.....$ 27.50 10.60

---

* IRON0084-011 06/01/2015

Rates Fringes

IRONWORKER, ORNAMENTAL.....$ 23.02 6.35

SUTX2014-068 07/21/2014

Rates Fringes

BRICKLAYER.....$ 20.04 0.00

CARPENTER.....$ 15.21 0.00

CEMENT MASON/CONCRETE FINISHER...$ 15.33 0.00

INSULATOR - MECHANICAL
(Duct, Pipe & Mechanical
System Insulation).....$ 19.77 7.13

IRONWORKER, REINFORCING.....$ 12.27 0.00

IRONWORKER, STRUCTURAL.....$ 22.16 5.26

LABORER: Common or General.....$ 9.68 0.00

LABORER: Mason Tender - Brick...$ 11.36 0.00

LABORER: Mason Tender -
Cement/Concrete.....$ 10.58 0.00

LABORER: Pipelayer.....$ 12.49 2.13

LABORER: Roof Tearoff.....$ 11.28 0.00

OPERATOR:
Backhoe/Excavator/Trackhoe.....$ 14.25 0.00

OPERATOR: Bobcat/Skid
Steer/Skid Loader.....$ 13.93 0.00

OPERATOR: Bulldozer.....$ 18.29 1.31

OPERATOR: Drill.....$ 16.22 0.34

OPERATOR: Forklift.....$ 14.83 0.00

OPERATOR: Grader/Blade.....$ 13.37 0.00

OPERATOR: Loader.....$ 13.55 0.94

OPERATOR: Mechanic.....$ 17.52 3.33

OPERATOR: Paver (Asphalt,
Aggregate, and Concrete).....$ 16.03 0.00

OPERATOR: Roller.....$ 12.70 0.00

PAINTER (Brush, Roller, and
Spray).....$ 14.45 0.00

PIPEFITTER.....$ 25.80 8.55

PLUMBER.....$ 25.64 8.16

ROOFER.....$ 13.75 0.00

SHEET METAL WORKER (HVAC Duct
Installation Only).....$ 22.73 7.52

SHEET METAL WORKER, Excludes
HVAC Duct Installation.....$ 21.13 6.53

TILE FINISHER.....$ 11.22 0.00

TILE SETTER.....$ 14.74 0.00

TRUCK DRIVER: Dump Truck.....$ 12.39 1.18

TRUCK DRIVER: Flatbed Truck.....$ 19.65 8.57

TRUCK DRIVER: Semi-Trailer
Truck.....$ 12.50 0.00

TRUCK DRIVER: Water Truck.....$ 12.00 4.11

WELDERS - Receive rate prescribed for craft performing
operation to which welding is incidental.

==========

Unlisted classifications needed for work not included within
the scope of the classifications listed may be added after
award only as provided in the labor standards contract clauses
(29CFR 5.5 (a) (1) (ii)).

The body of each wage determination lists the classification
and wage rates that have been found to be prevailing for the
cited type(s) of construction in the area covered by the wage

determination. The classifications are listed in alphabetical order of "identifiers" that indicate whether the particular rate is a union rate (current union negotiated rate for local), a survey rate (weighted average rate) or a union average rate (weighted union average rate).

Union Rate Identifiers

A four letter classification abbreviation identifier enclosed in dotted lines beginning with characters other than "SU" or "UAVG" denotes that the union classification and rate were prevailing for that classification in the survey. Example: PLUM0198-005 07/01/2014. PLUM is an abbreviation identifier of the union which prevailed in the survey for this classification, which in this example would be Plumbers. 0198 indicates the local union number or district council number where applicable, i.e., Plumbers Local 0198. The next number, 005 in the example, is an internal number used in processing the wage determination. 07/01/2014 is the effective date of the most current negotiated rate, which in this example is July 1, 2014.

Union prevailing wage rates are updated to reflect all rate changes in the collective bargaining agreement (CBA) governing this classification and rate.

Survey Rate Identifiers

Classifications listed under the "SU" identifier indicate that no one rate prevailed for this classification in the survey and the published rate is derived by computing a weighted average rate based on all the rates reported in the survey for that classification. As this weighted average rate includes all rates reported in the survey, it may include both union and non-union rates. Example: SULA2012-007 5/13/2014. SU indicates the rates are survey rates based on a weighted average calculation of rates and are not majority rates. LA indicates the State of Louisiana. 2012 is the year of survey on which these classifications and rates are based. The next number, 007 in the example, is an internal number used in producing the wage determination. 5/13/2014 indicates the survey completion date for the classifications and rates under that identifier.

Survey wage rates are not updated and remain in effect until a new survey is conducted.

Union Average Rate Identifiers

Classification(s) listed under the UAVG identifier indicate that no single majority rate prevailed for those classifications; however, 100% of the data reported for the classifications was union data. EXAMPLE: UAVG-OH-0010 08/29/2014. UAVG indicates that the rate is a weighted union average rate. OH indicates the state. The next number, 0010 in

the example, is an internal number used in producing the wage determination. 08/29/2014 indicates the survey completion date for the classifications and rates under that identifier.

A UAVG rate will be updated once a year, usually in January of each year, to reflect a weighted average of the current negotiated/CBA rate of the union locals from which the rate is based.

WAGE DETERMINATION APPEALS PROCESS

1.) Has there been an initial decision in the matter? This can be:

* an existing published wage determination
* a survey underlying a wage determination
* a Wage and Hour Division letter setting forth a position on a wage determination matter
* a conformance (additional classification and rate) ruling

On survey related matters, initial contact, including requests for summaries of surveys, should be with the Wage and Hour Regional Office for the area in which the survey was conducted because those Regional Offices have responsibility for the Davis-Bacon survey program. If the response from this initial contact is not satisfactory, then the process described in 2.) and 3.) should be followed.

With regard to any other matter not yet ripe for the formal process described here, initial contact should be with the Branch of Construction Wage Determinations. Write to:

Branch of Construction Wage Determinations
Wage and Hour Division
U.S. Department of Labor
200 Constitution Avenue, N.W.
Washington, DC 20210

2.) If the answer to the question in 1.) is yes, then an interested party (those affected by the action) can request review and reconsideration from the Wage and Hour Administrator (See 29 CFR Part 1.8 and 29 CFR Part 7). Write to:

Wage and Hour Administrator
U.S. Department of Labor
200 Constitution Avenue, N.W.
Washington, DC 20210

The request should be accompanied by a full statement of the interested party's position and by any information (wage

payment data, project description, area practice material, etc.) that the requestor considers relevant to the issue.

3.) If the decision of the Administrator is not favorable, an interested party may appeal directly to the Administrative Review Board (formerly the Wage Appeals Board). Write to:

Administrative Review Board
U.S. Department of Labor
200 Constitution Avenue, N.W.
Washington, DC 20210

4.) All decisions by the Administrative Review Board are final.

==========

END OF GENERAL DECISION

□

NAVFAC GeoReadiness

Prepared For:

yong.choe1@navy.mil

03/14/2016

Map of:

BASE MAP

FOR OFFICIAL USE ONLY

Not to Scale

Document Generated from RSIMS Internet Mapping Application

N

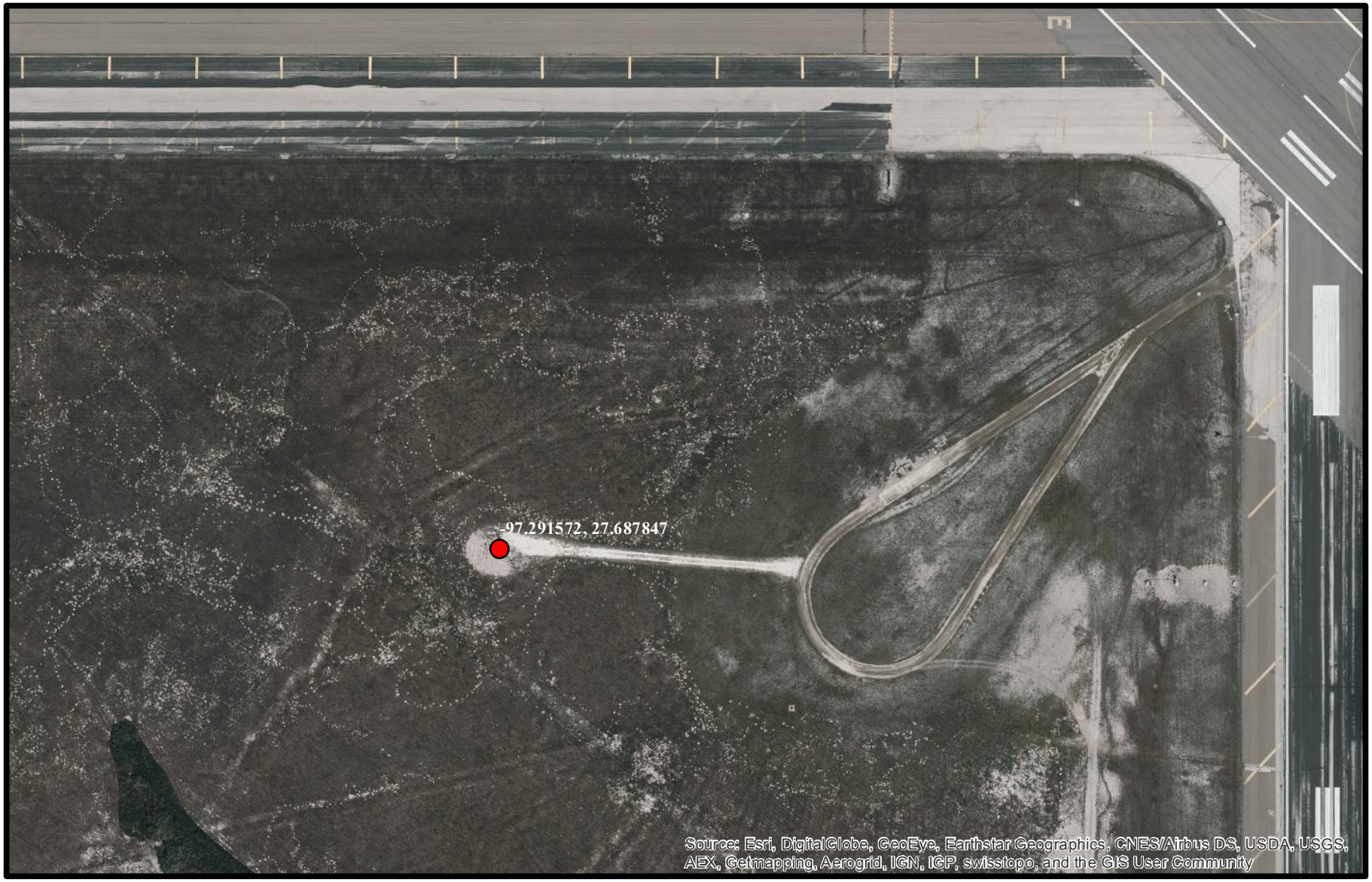

NAVFAC GeoReadiness

Prepared For:

yong.choe1@navy.mil

03/14/2016

Map of:

NASCC ASOS SITE 1

FOR OFFICIAL USE ONLY

Not to Scale

Document Generated from RSIMS Internet Mapping Application

N

NAVFAC GeoReadiness

Prepared For:

yong.choe1@navy.mil
03/14/2016

Map of:

NASCC ASOS SITE 2

FOR OFFICIAL USE ONLY

Not to Scale
Document Generated from RSIMS Internet Mapping Application

N

NAVFAC GeoReadiness

Prepared For:

yong.choe1@navy.mil

03/14/2016

Map of:

CABANISS ASOS SITE

FOR OFFICIAL USE ONLY

Not to Scale

Document Generated from RSIMS Internet Mapping Application

N

NAVFAC GeoReadiness

Prepared For:

yong.choe1@navy.mil

03/14/2016

Map of:

WALDRON ASOS SITE

FOR OFFICIAL USE ONLY

Not to Scale

Document Generated from RSIMS Internet Mapping Application

N

ATTACHEMENT B

NAVAL AIR STATION CORPUS CHRISTI TEXAS - WASTE SUMMARY SHEET

Name: _____ **Project Title:** _____ **POC/Phone:** _____

Number: _____ **Delivery Order:** _____ **Project Location:** _____

Activity*: _____ **Date of Project:** Start: End: _____

Types of Wastes	Landfill		Incinerated		**Recycled			***Composted		
	Tons	Cost	Tons	Cost	Tons	Cost	Revenue	Tons	Cost	Revenue
Metals										
Glass										
Paper & Paperboard Plastic										
Wood										
Asbestos										
Yard/Green Waste										
Other										
Ethylene Glycol Antifreeze										
Lead-Acid Batteries Used										
Motor Oil										
Construction& Demolition										
General Refuse										

*Recycling Facility used:_____
**Composting Facility used:_____
*** Asbestos Disposal Facility:_____
**** Waste (Hazardous/Non-Hazardous) Disposal Facility:_____

Contact John Phillips @ 361-961-5356 or john.phillips7@navy.mil for details.

ATTACHMENT C

LIST OF MATERIALS

ITEM NO.	QTY REQD	DESCRIPTION	FEDERAL STOCK NO. OR COMMERCIAL DES.	MIL-SPEC OR CAGE CODE	REMARKS	FURN/LCTN GFE	CFE	STA
1		CONCRETE, 3000 PSI			LOCALLY PURCHASED			X
2		GRAVEL, NO. 1 RIVER ROCK			LOCALLY PURCHASED			X
3		PIPE, 3" X 54" RIGID GALVANIZED			PART OF SITE PREPARATION EQUIP			X
4		CONDUIT, 1 1/4" PVC			PART OF SITE PREPARATION EQUIP			X
5		ELBOW, 1 1/4" PVC, SWEEP, 90 DEG			PART OF SITE PREPARATION EQUIP			X
6		CONNECTOR, 1 1/4" PVC END			PART OF SITE PREPARATION EQUIP			X
7		COUPLER, 1 1/4" PVC			PART OF SITE PREPARATION EQUIP			X
8		PIPE, 3" X 43" RIGID GALVANIZED			PART OF SITE PREPARATION EQUIP			X
9		PIPE, 3" X 8' RIGID GALVANIZED			PART OF SITE PREPARATION EQUIP			X
10		PIPE, 3" X 11'-8" RIGID GALVANIZED			PART OF SITE PREPARATION EQUIP			X
11		PIPE, 3" X 14'-8" RIGID GALVANIZED			PART OF SITE PREPARATION EQUIP			X
12		FLANGE, 3/4" X 7 1/2" DIA W/4 HOLES			PART OF SITE PREPARATION EQUIP			X
13		CAP, END, 3" RIGID			PART OF SITE PREPARATION EQUIP			X
14		UNISTRUT, 1 5/8" X 1 5/8" X 10' CHANNEL			PART OF SITE PREPARATION EQUIP			X
15		CONDULETTE, 1", "T"			PART OF SITE PREPARATION EQUIP			X
16		U-BOLT, 5/16" - 18 X 3" (SS)			PART OF SITE PREPARATION EQUIP			X
17		HARDWARE, SS, 3/4"-11 X 9"			PART OF SITE PREPARATION EQUIP			X
18		U-BOLT, 1/2" - 13 X 3" SS			PART OF SITE PREPARATION EQUIP			X
19		CONDUIT, 3/4" LIQUID TIGHT FLEXIBLE STEEL			PART OF SITE PREPARATION EQUIP			X
20		CONNECTOR, CONDUIT, 3/4" LIQUID TIGHT FLEXIBLE STEEL			PART OF SITE PREPARATION EQUIP			X
21		CONDUIT, 1" LIQUID TIGHT FLEXIBLE STEEL			PART OF SITE PREPARATION EQUIP			X
22		CONNECTOR, CONDUIT, 1" LIQUID TIGHT FLEXIBLE STEEL			PART OF SITE PREPARATION EQUIP			X
23		CONDUIT, 1 1/2" LIQUID TIGHT FLEXIBLE STEEL			PART OF SITE PREPARATION EQUIP			X
24		CONNECTOR, CONDUIT, 1 1/2" LIQUID TIGHT FLEXIBLE STEEL			PART OF SITE PREPARATION EQUIP			X
25		UTILITY BOX, 4" X 4" X 1 1/2" RAIN TIGHT			PART OF SITE PREPARATION EQUIP			X
26		CONDUIT, 1" PVC						X
27		AC DISTRIBUTION BOX, SQUARE "D"			INSTALLED BY STATION			X
28		CLAMP, 3" STAINLESS STEEL, B-LINE			PART OF SITE PREPARATION EQUIP			X
29		REBAR, 3/8"			PART OF SITE PREPARATION EQUIP			X
30		RACEWAY, WIRE	NWSO-10-880-0004	S100-2RW-1	INSTALLATION MATS			X
31		HARDWARE, SS 5/8"- 13 X 3"			INSTALLATION MATS			X
32		PLATE, ADAPTER, 3/8" X 7 1/2" D W/4 HOLES AT 90 DEG			TIPPING BUCKET			X
33		HARDWARE, SS, 1/4"-20 X 3/4"						X
34		HARDWARE, SS, 5/16"-18						X
35		HARDWARE, SS, 1/2"-16						X
36		BOLTS, 1"-8 X 36"L						X
37		PIPE, 3" X 18"			FURNISHED IN THUNDERSTORM SENSOR KIT			X
38		COUPLER, 1" RIGID			FROM WIND SENSOR TO DCP			X
39		LUG, MECHANICAL, 1/2"			FOR WIND TOWER			X
40		CONDUIT, 1" RIGID						X
41		PLATE, HINGE	5999-01-391-2515	S100-2MT5MP36				X
42		PIN	5315-01-424-0665	S100-2MT5MP36-1				X
43		KIT, MOUNTING, DTS1 (DT)	6660-01-541-4766	S100-FMK75-B				X
44		POLE, MOUNTING, (PW)		S100-2MT2A4				X
45		PLATE, MOUNTING (PW)	5340-01-537-5714	S100-2MT2A2MP2				X
46		KIT, THUNDERSTORM (TS)	5895-01-450-8658	S100-FMK-090				X
47		NOT USED						
48		COUPLER, 3" RIGID						
49		COLUMN, UPPER (V1)		S100-2MT5A7				X
50		COLUMN, LOWER (V1)		S100-2MT5A6				X
51		CONDUIT ASSEMBLY (V1)	5975-01-519-4518	S100-2MT5MP1				X
52		KIT, BIRD DETERRENT (WI)	NWSO-80-420-0001	S100-2ABMT3-MP				X
53		KIT, INSTALLATION (WI)	6660-01-525-3882	S100-2ABMT3-KIT				X
54		POLE ASSEMBLY, HINGED SENSOR, 30' (WI)	6660-J90-2218	S100-2ABMT1-4	CHANNELS, BASEPLATE, HARDWARE			X
55		ANGLE, (DCP MOUNTING)			INCLUDES MOUNTING HARDWARE			X
56		WIRE MESH, NO. 6 X 6 X 6 (50' ROLL)			PART OF SITE PREPARATION EQUIP AT WIND TOWER			X
57		ELBOW, 1" RIGID, SWEEP 90 DEG			PART OF SITE PREPARATION EQUIP			X
58		CONNECTOR, 1" PVC						X
59		CONDUIT, 2 1/2" RIGID						X
60		CONNECTOR, 2 1/2" RIGID						X
61		REDUCER, 1" TO 3/4"						X

REVISIONS

ZONE	REV	DESCRIPTION	DATE	APPROVED
	-	REFLECTS AS-BUILT CONDITIONS AS OF MAR 2010	07/2010	RLS / TSD

REFERENCES:

1. F-29355-509047 — SITE PLAN, INSTALLATION PLAN INDEX, AND REFERENCES
2. F-29355-509054 — AUTOMATED SURFACE OBSERVING SYSTEM (ASOS) EQUIPMENT ARRANGEMENTS AND ELEVATIONS ASOS SENSOR SITE
3. F-29355-509056 — AUTOMATED SURFACE OBSERVING SYSTEM (ASOS) CABLING AND WIRING DIAGRAM, ASOS SENSOR SITE
4. F-29355-509057 — AUTOMATED SURFACE OBSERVING SYSTEM (ASOS) AC POWER DISTRIBUTION AND GROUNDING ASOS SENSOR SITE
5. F-29355-509058 — AUTOMATED SURFACE OBSERVING SYSTEM, (ASOS) CABLING AND WIRING DIAGRAM, OPS SITE

LEGEND:

(item)	ITEM IN LIST OF MATERIAL
CFM	CONTRACTOR FURNISHED MATERIAL
GFM	GOVERNMENT FURNISHED MATERIAL
STA	STATION FURNISHED
ACU	ACQUISITION CONTROL UNIT
CI	CEILOMETER
DCP	DATA COLLECTION PACKAGE
DT	DTS1 DEW CELL
FR	FREEZING RAIN SENSOR
OID	OPERATOR INTERFACE DEVICE
OND	OPERATOR NOTIFICATION DEVICE
PDF	POWER DISTRIBUTION FRAME
PW	PRESENT WEATHER SENSOR
TB	TIPPING BUCKET
TD	TEMPERATURE SENSOR
UPS	UNINTERRUPTIBLE POWER SUPPLY
VDU	VISUAL DISPLAY UNIT
VI	VISIBILITY SENSOR
WI	WIND SPEED / DIRECTION SENSOR

THIS PUBLICATION IS FOR OFFICIAL USE ONLY. DISTRIBUTION IS LIMITED TO U.S. GOVERNMENT AGENCIES. OTHER REQUESTS FOR DISTRIBUTION MUST BE REFERRED TO SPAWARSYSCEN ATLANTIC.

REVISION STATUS OF SHEETS

SCIENTEC RESEARCH CORPORATION
1101 REMOUNT ROAD SUITE 500
NORTH CHARLESTON, SC 29406

DRAFTSMAN N. HURLBERT
CHECKED D. WESTBROOK
PROJECT ENGINEER
BRANCH HEAD
SHAWN BOYKIN
DATE 07/2010
LEVEL ( ) TO SPAWAR LTR SER

SPAWAR SYSTEMS CENTER ATLANTIC
P.O. BOX 190022, NORTH CHARLESTON, SC 29419-9022

AIR TRAFFIC CONTROL (ATC) FACILITY DRAWING PACKAGE
AUTOMATED SURFACE OBSERVING SYSTEM (ASOS)
FOUNDATION DETAILS, ASOS SENSOR SITE
NALF CABANISS, CORPUS CHRISTI, TX

SIZE	CAGE CODE	DWG NO.	REV
F	29355	509055	-

SCALE NONE — SHEET 1 OF 7

29355-509055-SPD-001

NOTES: THIS SHEET ONLY

1. ENTIRE SLAB WITH EXCEPTION OF WIND TOWER BASE, WAS REINFORCED WITH 6" X 6" WIRE MESH.
2. OVERALL SLAB DIMENSIONS DENOTE FORM SIZE, ACTUAL CONCRETE DIMENSIONS TO BE +/-3" SMALLER.
3. STATION PLANTED NATURAL, LOW MAINTENANCE GRASSES AROUND SENSOR SITE.
4. THE 19" DIMENSION BETWEEN MOUNTING STUDS IS CRITICAL. THE TOLERANCE IS +/-0.03". THIS AREA WAS REINFORCED WITH REBAR.

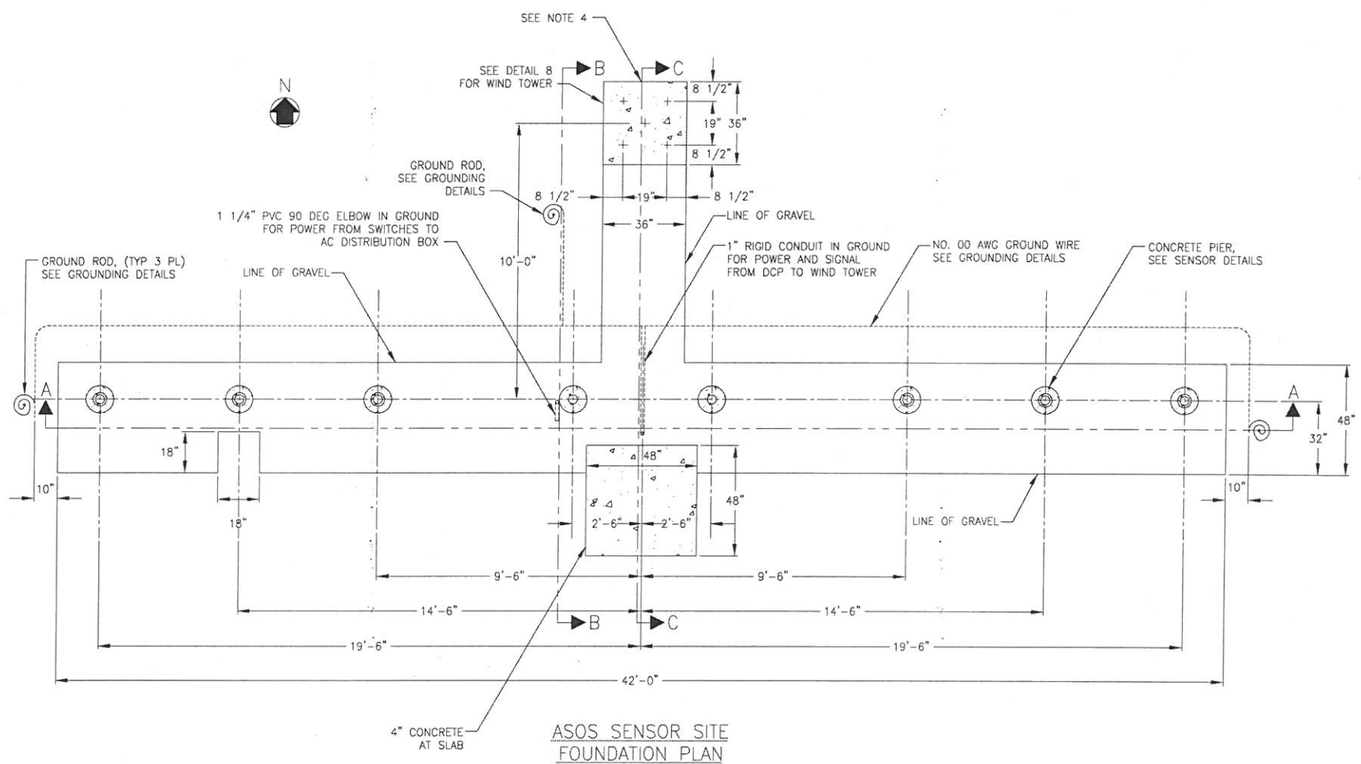

ASOS SENSOR SITE
FOUNDATION PLAN
SEE NOTE 2
SCALE: 1/2"= 1'-0"

GRAPHIC SCALE 0 1 2 4 6
1/2"=1'-0"

ASOS SENSOR SITE
FOUNDATION PLAN

NALF CABANISS, CORPUS CHRISTI, TX

SIZE	CAGE CODE	DWG NO.	REV.
F	29355	509055	–
SCALE 1/2"=1'-0"		SHEET 2 OF 7	

29355-509055-SPD-002

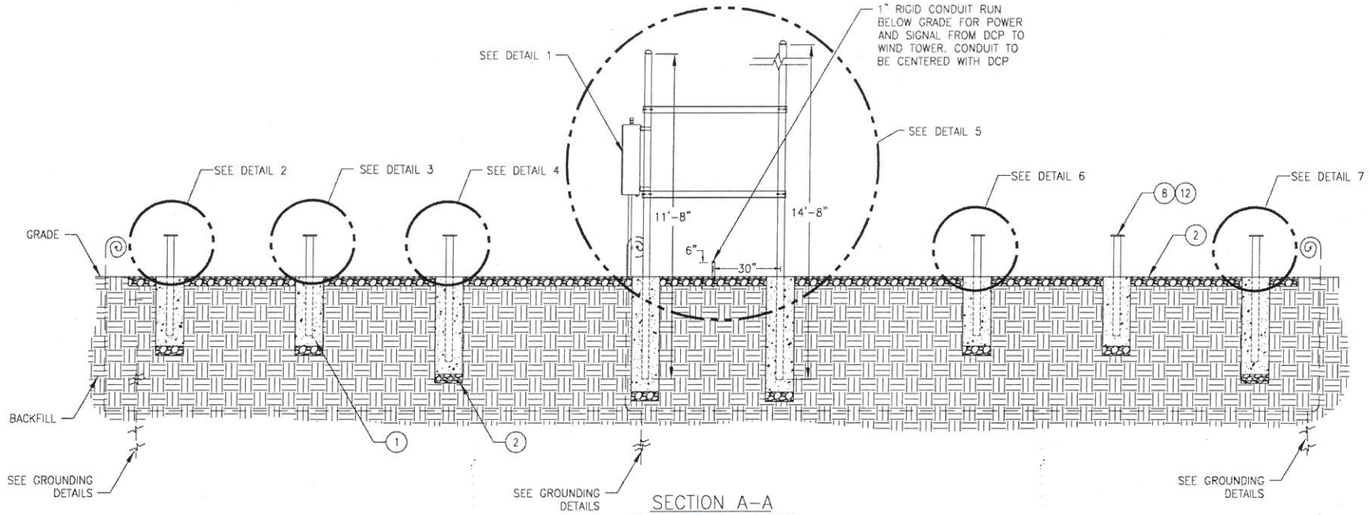

SECTION A-A

ASOS SENSOR SITE FOUNDATION
SCALE: 1/2" = 1'-0"

NOTES: THIS SHEET ONLY

1. ENTIRE SLAB WAS REINFORCED WITH 6" X 6" WIRE MESH.
2. OVERALL SLAB DIMENSIONS DENOTE FORM SIZE, ACTUAL CONCRETE DIMENSIONS WAS +/-3" SMALLER.

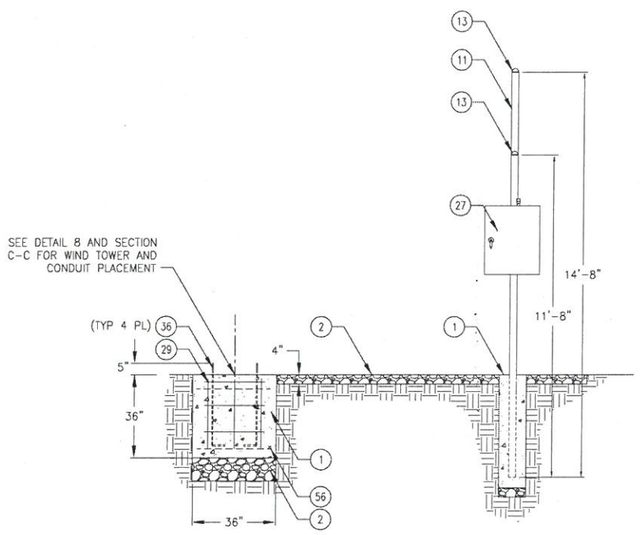

SECTION B-B

ASOS SENSOR SITE FOUNDATION
SCALE: 1/2" = 1'-0"

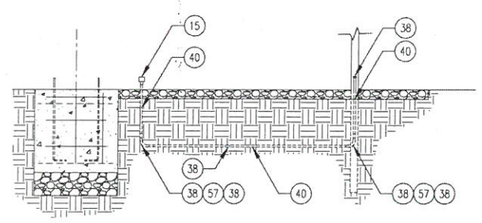

SECTION C-C

ASOS SENSOR SITE
RIGID CONDUIT LOCATION FROM DCP TO WIND TOWER
SCALE: 1/2"= 1'-0"

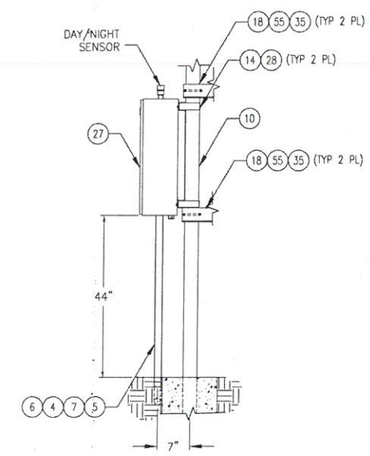

DETAIL 1

AC DISTRIBUTION
ENCLOSURE MOUNTING
SCALE: NONE

GRAPHIC SCALE 0 1 2 4 6
1/2"=1'-0"

ASOS SENSOR SITE FOUNDATION SECTIONS AND DETAIL

NALF CANANISS — CORPUS CHRISTI, TX

SIZE	CAGE CODE	DWG NO.	REV.
F	29355	509055	–
SCALE 1/2"=1'-0"		SHEET 3 OF 7	

29355-509055-SPD-003

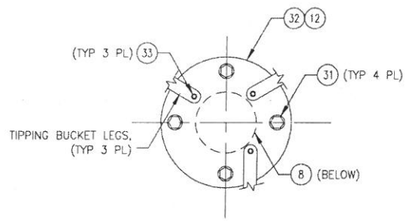

TIPPING BUCKET FLANGE DETAIL
SCALE: NONE

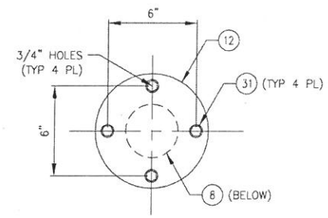

TYPICAL SENSOR FLANGE DETAIL
SCALE: NONE

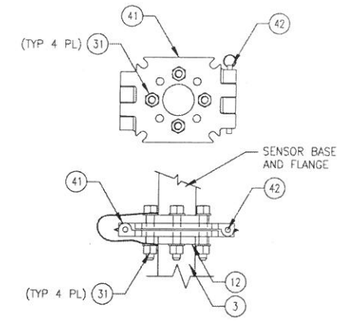

HINGE PLATE DETAIL
SCALE: NONE

NOTES: THIS SHEET ONLY

1. TEMPERATURE SENSOR EQUIPMENT INCLUDES ASPIRATOR HOUSING ASSEMBLY, SOLAR SHIELD, DEWPOINT SENSOR, ELECTRONIC ENCLOSURE, AND ALL RELATED HARDWARE.
2. DTS1 DEW CELL SENSOR EQUIPMENT INCLUDES SENSOR HEAD, SOLAR SHIELD, ELECTRONIC ENCLOSURE, PEDESTAL, AND ALL RELATED HARDWARE.
3. PRESENT WEATHER SENSOR EQUIPMENT INCLUDES CROSSARM, ELECTRONICS ENCLOSURE, MOUNTING POLE, MOUNTING PLATE, AND ALL RELATED HARDWARE.
4. PRESENT WEATHER SENSOR OPENS TO NORTH AT HINGE PLATE.

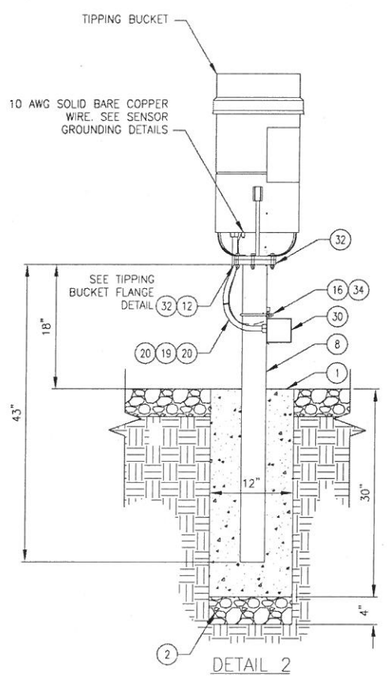

DETAIL 2
TIPPING BUCKET
SCALE: 1 1/2" = 1'-0"

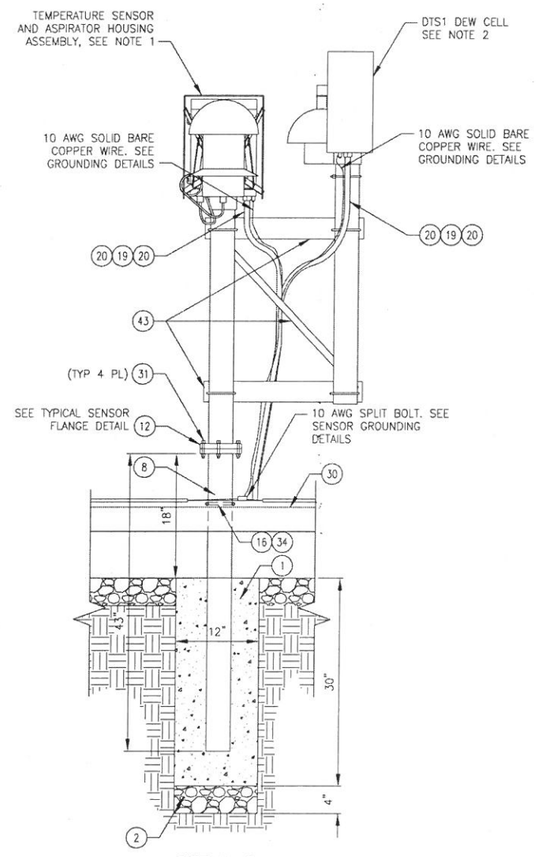

DETAIL 3
TEMPERATURE SENSOR
DTSI DEW CELL
SCALE: 1 1/2" = 1'-0"

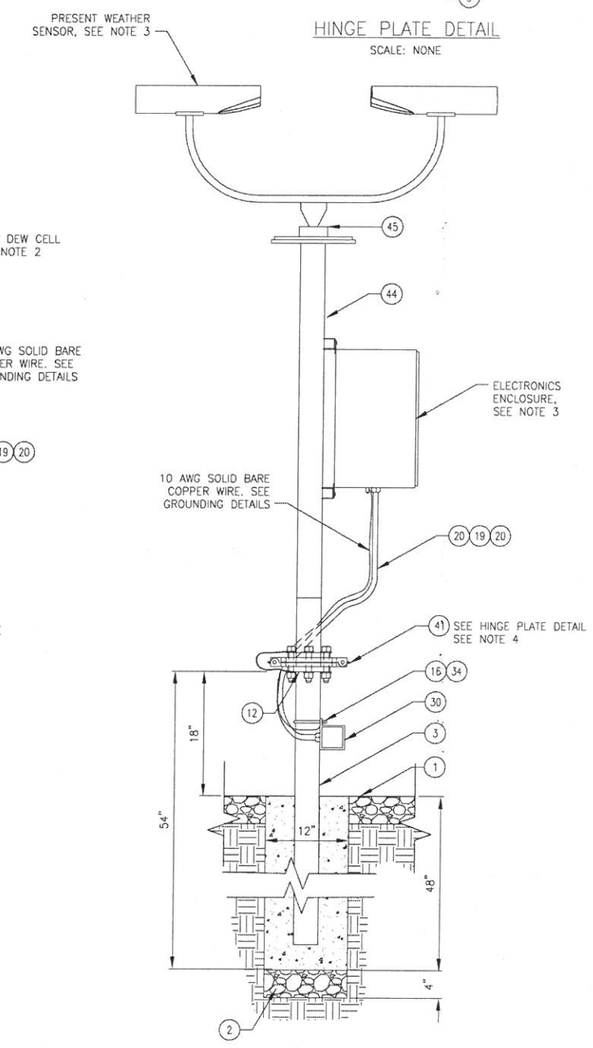

DETAIL 4
PRESENT WEATHER SENSOR
SCALE: 1 1/2" = 1'-0"

GRAPHIC SCALE 0 1 2
1 1/2"=1'-0"

ASOS SENSOR SITE FOUNDATION AND MOUNTING DETAILS

NALF CABANISS, CORPUS CHRISTI, TX

SIZE	CAGE CODE	DWG NO.	REV.
F	29355	509055	–
SCALE 1 1/2"=1'-0"		SHEET 4 OF 7	

29355-509055-SPD-004

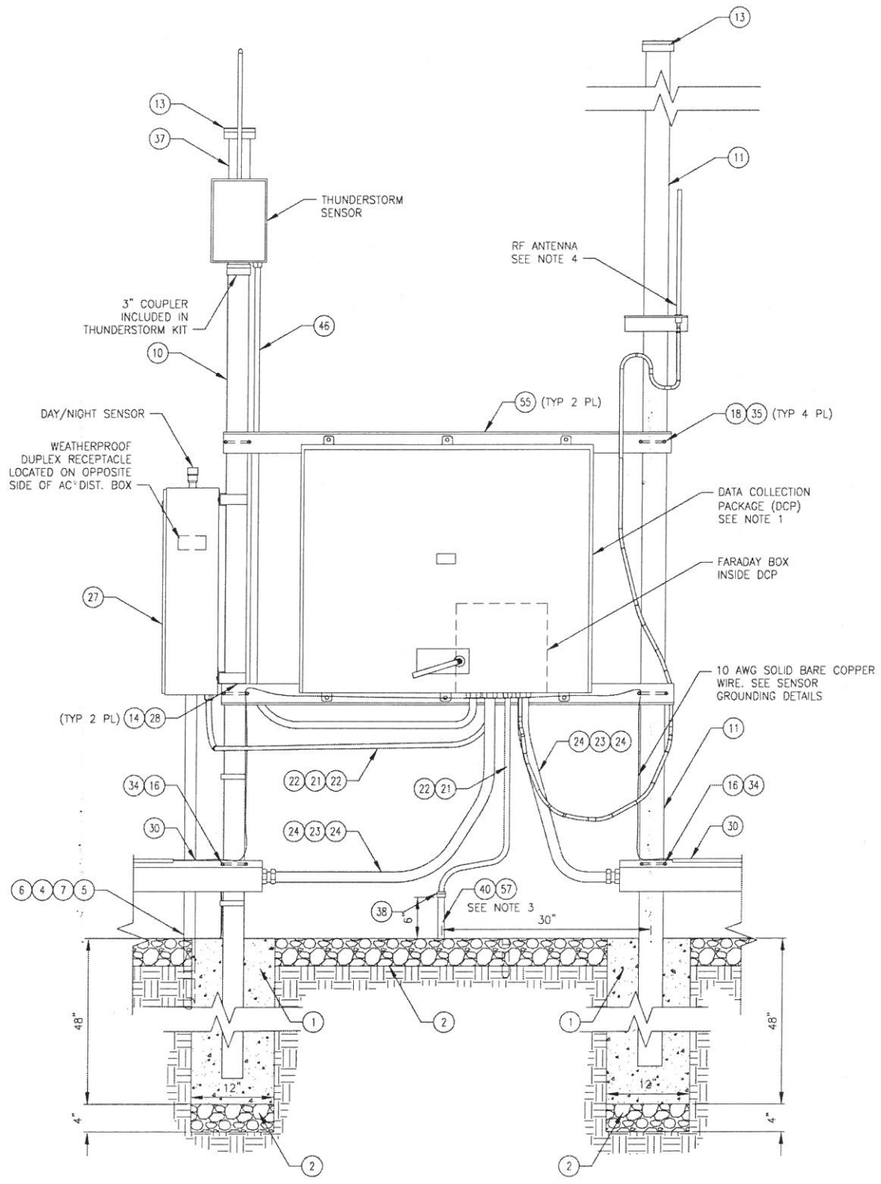

DETAIL 5

DCP, AC DISTRIBUTION ENCLOSURE
SCALE: 1 1/2" = 1'-0"

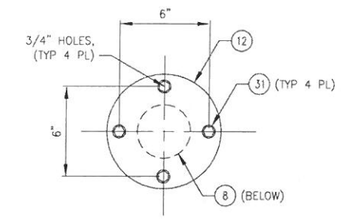

TYPICAL SENSOR FLANGE DETAIL

SCALE: NONE

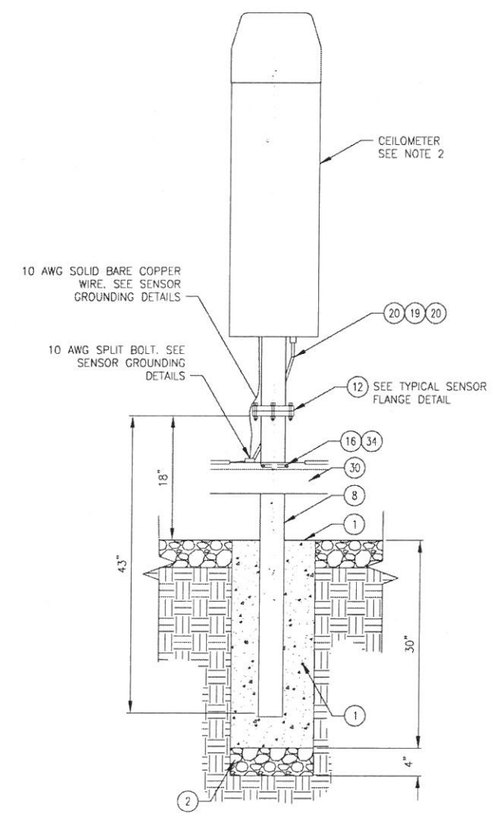

DETAIL 6

CEILOMETER
SCALE: 1 1/2" = 1'-0"

NOTES: THIS SHEET ONLY

1. DCP EQUIPMENT INCLUDES ENCLOSURE CABINET WITH ALL ELECTRICAL COMPONENTS AND ALL RELATED HARDWARE.
2. CEILOMETER EQUIPMENT INCLUDES ATTACHED PEDESTAL, ALL ELECTRICAL COMPONENTS AND HARDWARE
3. 1" RIGID CONDUIT WITH 2 EACH 90 DEGREE SWEEP ELBOWS TO RUN POWER AND SIGNAL FROM WIND TOWER TO DCP. STOP WITH 1" COUPLER AT 6" ABOVE CONCRETE SLAB.
4. RF ANTENNA EQUIPMENT ASSEMBLY INCLUDES ANTENNA, CABLE, U-BOLTS, AND RELATED MOUNTING HARDWARE

GRAPHIC SCALE 0 1 2
1 1/2"=1'-0"

ASOS SENSOR SITE FOUNDATION AND MOUNTING DETAILS

NALF CABANISS — CORPUS CHRISTI, TX

SIZE	CAGE CODE	DWG NO.	REV.
F	29355	509055	–
SCALE 1 1/2"=1'-0"		SHEET 5 OF 7	

29355-509055-SPD-005

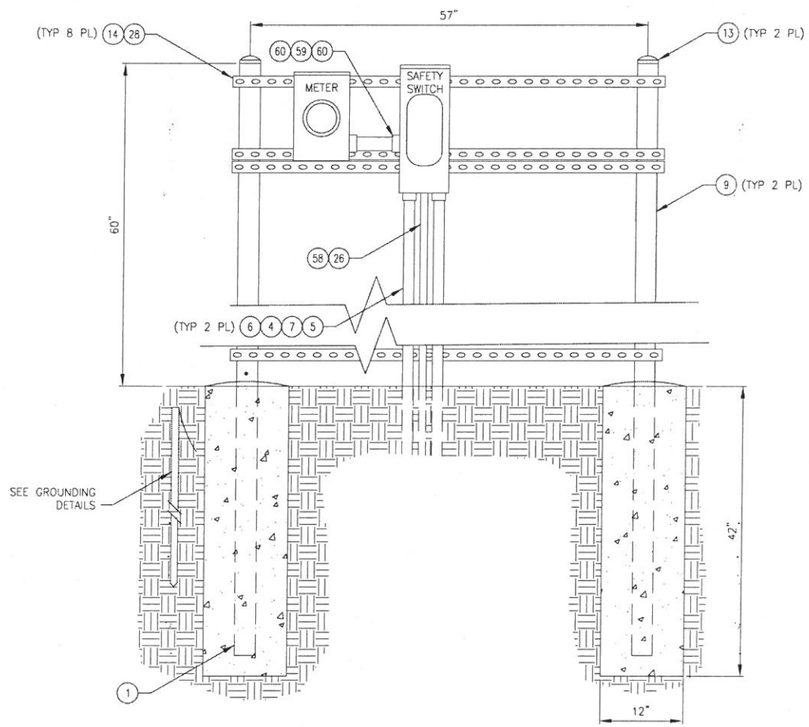

AC POWER DISTRIBUTION FRAME

ELECTRICAL EQUIPMENT MOUNTING FRAME FOR
DISCONNECT SWITCH & METER
SEE NOTES 1 THRU 3

NOTES: THIS SHEET ONLY

1. TIE ALL CONDUIT GROUNDS TOGETHER AT GROUND ROD WITH NO. 00 AWG BARE CONDUCTOR.
2. PROVIDE 1-3C 10 AWG, 600 V TYPE MC CABLE IN CONDUITS TO COMBINED SENSOR GROUP AC POWER DISTRIBUTION ENCLOSURE.
3. AC POWER DISTRIBUTION EQUIPMENT IS LOCATED A MAXIMUM DISTANCE OF 10'-15' FROM SENSOR GROUP.

GRAPHIC SCALE 0 1 2
1 1/2"=1'-0"

ASOS SENSOR SITE
FOUNDATION AND
MOUNTING DETAILS

NALF CABANISS CORPUS CHRISTI, TX

SIZE	CAGE CODE	DWG NO.	REV.
F	29355	509055	–
SCALE 1 1/2"=1'-0"		SHEET 7 OF 7	

29355-509055-SPD-007

THIS PHOTOGRAPH OF ASOS SENSOR SYSTEM IS FOR ILLUSTRATION ONLY