General Notes

1. This drawing provides a torque-based proof test procedure for UNC-2B Safety Hoist Ring (SHR) threaded lift holes and NDT procedure for welded lifting attachments.

2. **Torque-Based Proof Test Procedure For Threaded Lift Holes** (This applies to a lift point which has no attachment welds, such as that shown in Figures 2B and 4B)

   The test applies to the Safety Hoist Rings listed in Table 3B only, and is valid only for lift holes of sufficient thread depth (Table 3B) in base material, the material yield stress of which is greater than or equal to 30,000 psi. The test bolt, nut and washer that comprise the test apparatus must comply with the specifications of Table 3A and with the dimensions of Table 3B for the hole being tested. Certificate of Compliance is required for all test hardware. Before each test, inspect the threads of the bolt and the nut to ensure they are free of lubrication, dirt and debris. Clean as necessary. Inspect threads for signs of distortion or wear. If distortion or wear is detected on any one of the three components of the test apparatus (bolt, nut or washer), obtain a new test bolt, nut and washer for the test.

   A. Thread the nut onto the cap screw until the leading surface of the nut is at the required length of thread engagement as listed in Table 3B. The tolerance on thread engagement is $^{-0}/_{+5}$ % with a minimum tolerance of $^{1}/_{32}$ in. (See Figure 2B).

   B. Apply fresh Molykote™ P37 (or equivalent) lubricant to the threads above and starting at the leading surface of the nut (See Figure 2B). Thread the nut fully onto the lubricated threads of the bolt and apply lubricant to the trailing surface of the nut. Do not lubricate the threaded hole.

   C. Inspect the lift hole threads for lubrication, dirt and debris. Clean as necessary. Install the proof test assembly (cap screw, nut and washer) into the tapped hole to the required depth of engagement listed in Table 3B.

   D. While restraining the cap screw, torque the nut to the torque listed in Table 3B (the tolerance is $^{+5}/_{-0}$ %). Re-check the torque on nut;

   E. After ten minutes, remove the proof test assembly. In this arrangement, only the portion of the threads on the cap screw that engage the nut is lubricated. The cap screw threads that engage the tapped hole of the component are not lubricated. Remove lubricant (1x visual confirmation of removal required) from the tapped hole surfaces at the completion of proof testing.

   F. Perform a visual 1x inspection of the accessible area for damage or deformation. Inspect internal threads for residual lubrication, dirt and debris. Clean as necessary. Inspect threads for signs of damage or deformation. Perform a 2B Go/No-Go gauge check of the lift hole. The No-Go acceptance criterion is that the No-Go gauge does not enter the material more than three complete turns. The threads shall pass a go/no-go gauge check and show no signs of cracks, permanent distortion or other damage.

Table 3B

See Table 3A for test apparatus specifications

SHR & test thread size / SHR rated load (Lbs.)	*Minimum bolt length* General Note2*	*Thread Engagement Steps A & C*	*Test torque Step D*
5/16-18 UNC / 800 lbs.	1.5 in.	0.54 $^{+0.00}/_{-0.03}$ in.	84 $^{+4}/_{-0}$ in-lbs.
3/8-16 UNC / 1,000 lbs.	1.5 in.	0.54 $^{+0.00}/_{-0.03}$ in.	12 $^{+1}/_{-0}$ ft-lbs.
½-13 UNC / 2,500 lbs.	2 in.	0.78 $^{+0.00}/_{-0.04}$ in.	28 $^{+1}/_{-0}$ ft-lbs.
5/8-11 UNC / 4,000 lbs	2.25 in.	0.78 $^{+0.00}/_{-0.04}$ in.	60 $^{+3}/_{-0}$ ft-lbs.
¾-10 UNC / 7,000 lbs.	2.5 in.	1.03 $^{+0.00}/_{-0.05}$ in.	100 $^{+5}/_{-0}$ ft-lbs.
1-8 UNC / 10,000 lbs.	3.25 in.	1.29 $^{+0.00}/_{-0.07}$ in.	230 $^{+12}/_{-0}$ ft-lbs.
1 ¼-7 UNC / 15,000 lbs.	3.75 in.	1.89 $^{+0.00}/_{-0.10}$ in.	470 $^{+24}/_{-0}$ ft-lbs.
1 ½-6 UNC / 24,000 lbs.	4.5 in.	2.70 $^{+0.00}/_{-0.14}$ in.	800 $^{+40}/_{-0}$ ft-lbs.
2-4 1/2 UNC / 30,000 lbs.	5.75 in.	2.96 $^{+0.00}/_{-0.15}$ in.	1200 $^{+60}/_{-0}$ ft-lbs.

** Note: Bolt length does not include thickness of the head.*

Table 3A

Test hardware specification. See General Note 2

Pc	Qty	Name	Description	Specification
1	1	Test bolt	Socket Head Cap Screw, UNC-2A or UNC-3A	ASTM A574, ANSI B18.3
2	1	Test nut	Heavy Hex nut, UNC-2B	ASTM A194/A Grade 2H
3	1	Test washer	Hardened washer	ASTM F436 Type 1 circular

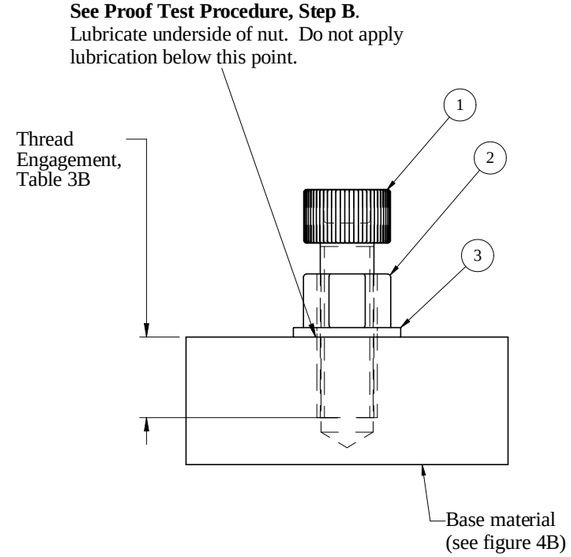

Figure 2B

Torque-based proof test arrangement

References

A. NAVSEA TECHNICAL PUBLICATION T9074-AS-GIB-010/271 (TP-271), Requirements For Nondestructive Testing Methods

B. MIL-STD-2035, Nondestructive Testing Acceptance Criteria

REVISION

SYM	BY	DATE	CHK	DATE	DESCRIPTION	APPROVAL
A	\S\ J. Kineman	10-3-03	\S\ M. Sorna	10-3-03	Added requirement for Certificate of Compliance on test hardware in General Note 2; added test apparatus specifications for 5/16-18 Safety Hoist Rings in Table 3B; corrected table reference for Thread Engagement dimension in Figure 2B	\S\ N. Florio 10-3-03
B	\S\ J. Kineman	2-26-04	\S\ M. Sorna	2-26-04	Added UNC-3A option to the test hardware specification for the Pc-1 bolt in Table 3A. Clarifying footnote added to Table 3B.	\S\ N. Florio 2-26-04
C	\S\ J. Terrell	10-29-09			1. Changed title of DWG and added Sheet 2 to include NDT procedures for welded lifting attachments. 2. Reformatted Notes 1 & 2. 3. Added References A & B. C/2370.21 Concurrence: \S\ G. Holmes 10-29-09	\S\ J. Byrnes 10-29-09
D	\S\ J. Terrell	2-17-2011			1. Changed General Note 4 to include aluminum. C/2370.21 Concurrence: \S\ G. Holmes 3-7-2011	\S\ J. Byrnes 3-9-2011

DISTRIBUTION STATEMENT: N/A

ADC Review

SIGNATURE	DATE
\S\ J. Byrnes	10-29-09

CAD INFORMATION

SHEETS OF THIS DRAWING WERE COMPOSED USING SOLID EDGE OR SMARTSKETCH.
REVISIONS TO THESE SHEETS SHOULD BE MADE ON THE WINDOWS NT CAD SERVER.

File name: DWG 2301-3411 Rev D.dft

This drawing was last worked on 01/20/2011

CONCURRENCE

CODE	**2370.21**					
SIGN	SIGNATURE					
DATE	9-17-03					
CODE						
SIGN						
DATE						

NO DEVIATIONS SHALL BE MADE

APPROVAL	
BRANCH	SIGNATURE & DATE
BRANCH SUPV.	/S/ N. Florio 9-17-03
SECTION SUPV.	N/A
CHECKED	/S/ M. Schroder 9-17-03
DRAWN	/S/ J. Kineman 9-17-03
DESIGNED	/S/ J. Kineman 9-17-03

PUGET SOUND NAVAL SHIPYARD
ENGINEERING DIVISION, CODE 2370

UNLESS OTHERWISE SPECIFIED, DIMENSIONS ARE IN INCHES

F/SR NO. | TOLERANCES: See General Notes.

TITLE

Torque-based Proof Test for Safety Hoist Ring Lift Holes and NDT for Lifting Attachments

SCALE AS SHOWN | DRAWING NO. 2301-3411 | REV D

Sheet 1 of 2

DWG REVISION SUM.

SYM / DATE									
1									
2									
3									
4									
5									
6									
7									
8									
9									

CODE/PHONE

ESTIMATOR

J.O. NUMBER

PRINT ISSUE RECORD

STIC 431	3	3							
ECF Idaho									
RPCO	1	1							
NRRO	1	1							
460	3	3							
2350									
2340									
2330									
2320									
2310									
2302.3									
99									
94									
81									
72									
71									
67									
64									
57									
56									
51									
41									
38									
31									
26									
23									
17									
11									
06									
248.2									
248.3									
248.5									
250									
2370.21	1	1							
2370.22									
2370.25									
2370.24	4	4							
REV.	sec.	A							
SHOP / DATE									

SHEET 1 | REV D | Torque-based Proof Test for Safety Hoist Ring Lift Holes | TITLE | 2301-3411 | DWG. NO.

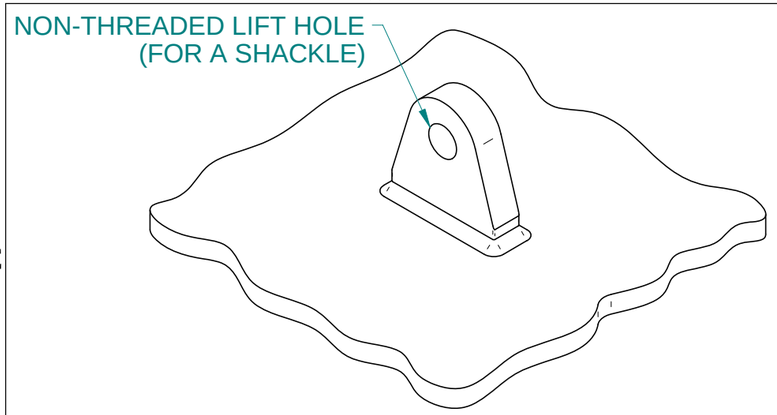

FIGURE 6C:
LIFT LUG TYPE - WELDED LIFTING ATTACHMENT
INSPECT IAW NOTE 3 (OR 4)

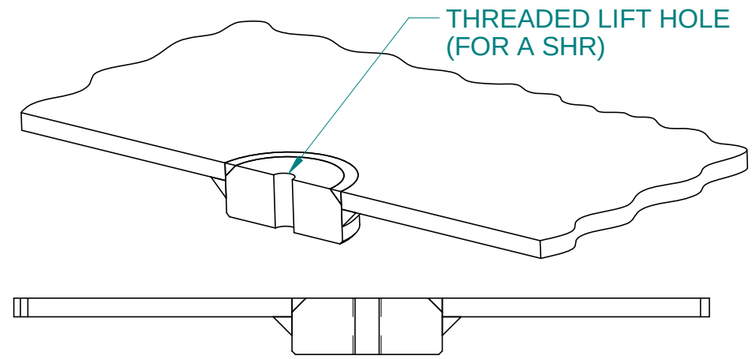

FIGURE 5C:
LIFT BLOCK TYPE - WELDED LIFTING ATTACHMENT
INSPECT IAW NOTES 3 (OR 4) AND 2.F.

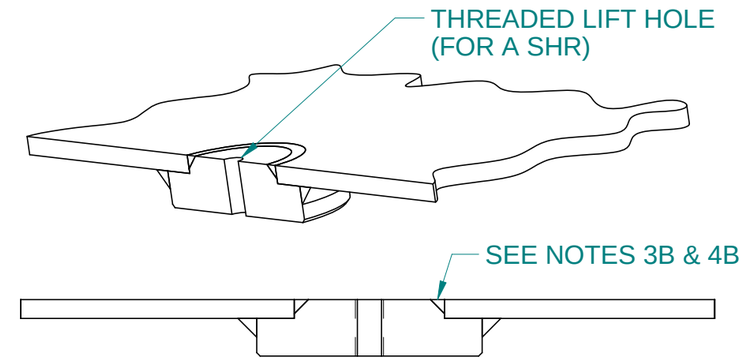

FIGURE 4C:
LIFT BLOCK TYPE (WITH SHOULDER)
- WELDED LIFTING ATTACHMENT
INSPECT IAW NOTES 3 (OR 4) AND 2.F.

General Notes (continued from Sheet 1)

3. NDT Requirements For Carbon Steel Welded Lifting Attachments, inspect per the following:

A. Prior to and after the load test, perform a visual inspection of the attachment welds of each lift lug/block as well as the accessible base metal of each lift lug/block. Ensure no apparent deformation, cracks, or other apparent damage of these load bearing parts.

B. Prior to and after the load test, the attachment welds of each lift lug/block as well as the accessible base metal of each lift lug/block shall be Magnetic Particle (MT) inspected per NAVSEA Publication T9074-AS-GIB-010/271 (Reference A). Use the acceptance criteria of MIL-STD-2035 (Reference B), Class 3 for Welds and Forgings/Wrought Material for Base Metal. This inspection shall include the inside of the non-threaded lift lug hole, as shown in Figure 6C. NDT of threaded safety hoist ring (SHR) holes shall be performed IAW General Note 2.F of this drawing. For a lift block with a shoulder feature such as shown in Figure 4C, the bevel weld at the top surface is not considered load-bearing and will not require NDT.

C. Load test requirements shall be IAW parent manufacture drawing.

D **4. NDT Requirements For Stainless Steel (or Aluminum) Welded Lifting Attachments, inspect per the following:**

A. Prior to and after the load test, perform a visual inspection of the attachment welds of each lift lug/block as well as the accessible base metal of each lift lug/block. Ensure no apparent deformation, cracks, or other apparent damage of these load bearing parts.

B. Prior to and after the load test, the attachment welds of each lift lug/block as well as the accessible base metal of each lift lug/block shall be Liquid Penetrant (PT) inspected per NAVSEA Publication T9074-AS-GIB-010/271 (Reference A). Use the acceptance criteria of MIL-STD-2035 (Reference B), Class 3 for Welds and Forgings/Wrought Material for Base Metal. This inspection shall include the inside of the non-threaded lift lug hole, as shown in Figure 6C. NDT of threaded safety hoist ring (SHR) holes shall be performed IAW General Note 2.F of this drawing. For a lift block with a shoulder feature such as shown in Figure 4C, the bevel weld at the top surface is not considered load-bearing and will not require NDT.

C. Load test requirements shall be IAW parent manufacture drawing.

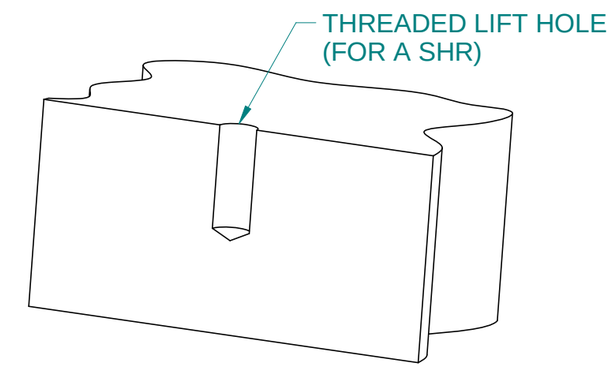

FIGURE 4B:
THREADED LIFT HOLE - NO ATTACHMENT WELDS
TEST AND INSPECT IAW NOTE 2.

ENGINEERING DIVISION, CODE 2370		
DWG. NO. 2301-3411	TITLE NDT For Lifting and Handling	
SCALE AS SHOWN	Sheet 2 of 2	REV D

SHEET 2 | REV D | Torque-based Proof Test for Safety Hoist Ring Lift Holes | TITLE | 2301-3411 | DWG. NO.

GENERAL NOTES

1. DRAWING PSNS 2370-1835 PROVIDES GENERAL NOTES AND SPECIFICATIONS TO BE USED WITH THIS DRAWING.

STRUCTURAL STEEL LEGEND (PLAN VIEWS)

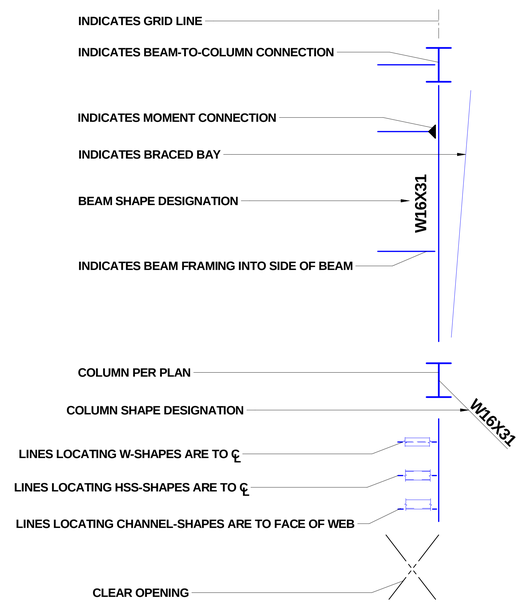

SYMBOL LEGEND

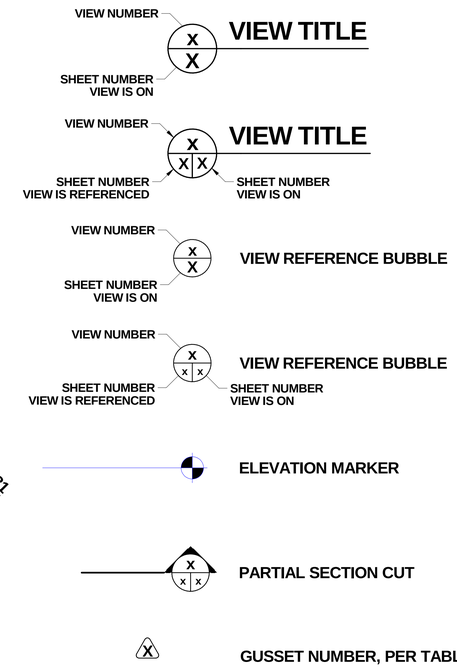

REVISIONS

SYMB	REV	DESCRIPTION	DATE	CHANGE BY	APPROVAL
A	A				
B	B				
C	C				
D	D				

ABBREVIATIONS

ADJ	- ADJUSTABLE	MFR	- MANUFACTURER
B/	- BOTTOM OF	MIN	- MINIMUM
BP	- BASE PLATE	O.C.	- ON CENTER
BRB	- BUCKLING RESTRAINED BRACE	PL	- PLATE
CJP	- COMPLETE JOINT PENETRATION	PLATF	- PLATFORM
CL OR ℄	- CENTERLINE	REQ'D	- REQUIRED
COL	- COLUMN	SC	- SLIP CRITICAL
DC	- DEMAND CRITICAL	SCH	- SCHEDULE
ELEV OR EL	- ELEVATION	SFRS	- SEISMIC FORCE RESISTING SYSTEM
GA.	- GAUGE	SSH	- SHORT-SLOT HOLE
HORIZ	- HORIZONTAL	SST	- STAINLESS STEEL
ISO	- ISOMETRIC	STL	- STEEL
LLV	- LONG LEG VERTICAL	T&B	- TOP AND BOTTOM
LSH	- LONG-SLOT HOLE	T/	- TOP OF
MAX	- MAXIMUM	TYP	- TYPICAL

DISTRIBUTION STATEMENT: N/A

A.D.C. REVIEW

	SIGNATURE	DATE
	J. BYRNES /S/	11/12/14

CONCURRENCE

CODE	SIGNATURE	DATE

/S/ SIGNATURE ON FILE **APPROVAL**

	SIGNATURE	DATE
BRANCH SUPV.	J. BYRNES /S/	11/12/14
CHECKED	K. BOTTELBERGHE /S/	11/12/14
DRAWN	B. MEACHAM /S/	11/12/14
DRAWN		
DESIGNED		
FILE PATH		

PUGET SOUND NAVAL SHIPYARD
CODE 2370
ENGINEERING DIVISION

NO DEVIATIONS SHALL BE MADE
WITHOUT CODE 2370 APPROVAL

DRAWING NO. **2370-1830**

TITLE **RAE BRIDGE (DD1)**

SCALE N/A | **Sheet 1 of 20** | REV. **ORIG**

SHEET 1 REV. ORIG
TITLE RAE BRIDGE (DD1)
DWG. NO. 2370-1830

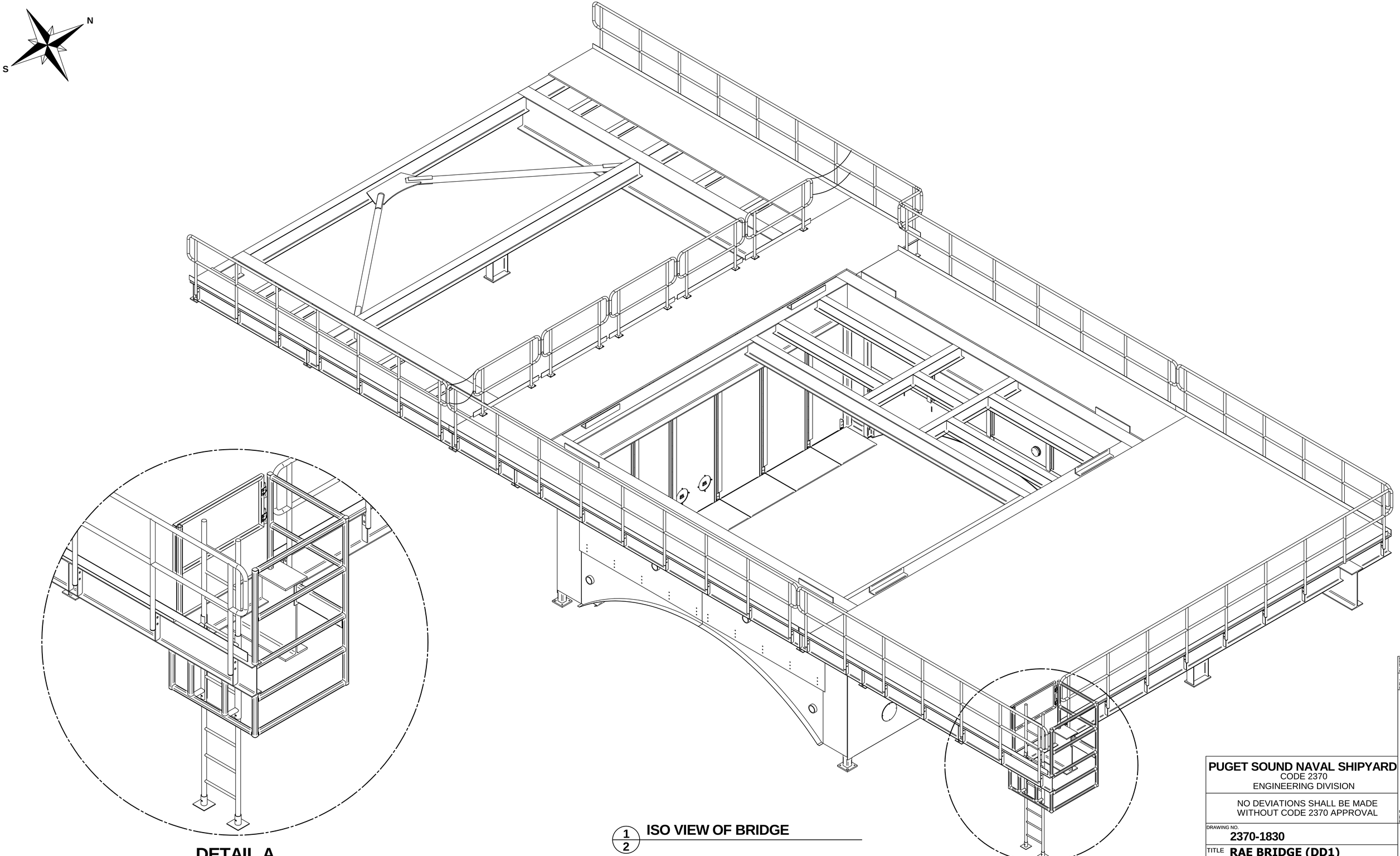

1/2 ISO VIEW OF BRIDGE

PUGET SOUND NAVAL SHIPYARD
CODE 2370
ENGINEERING DIVISION

NO DEVIATIONS SHALL BE MADE
WITHOUT CODE 2370 APPROVAL

DRAWING NO. **2370-1830**

TITLE **RAE BRIDGE (DD1)**

SCALE N/A | **Sheet 2 of 20** | REV. **ORIG**

TITLE RAE BRIDGE (DD1) | REV. ORIG | SHEET 2

DWG. NO. 2370-1830

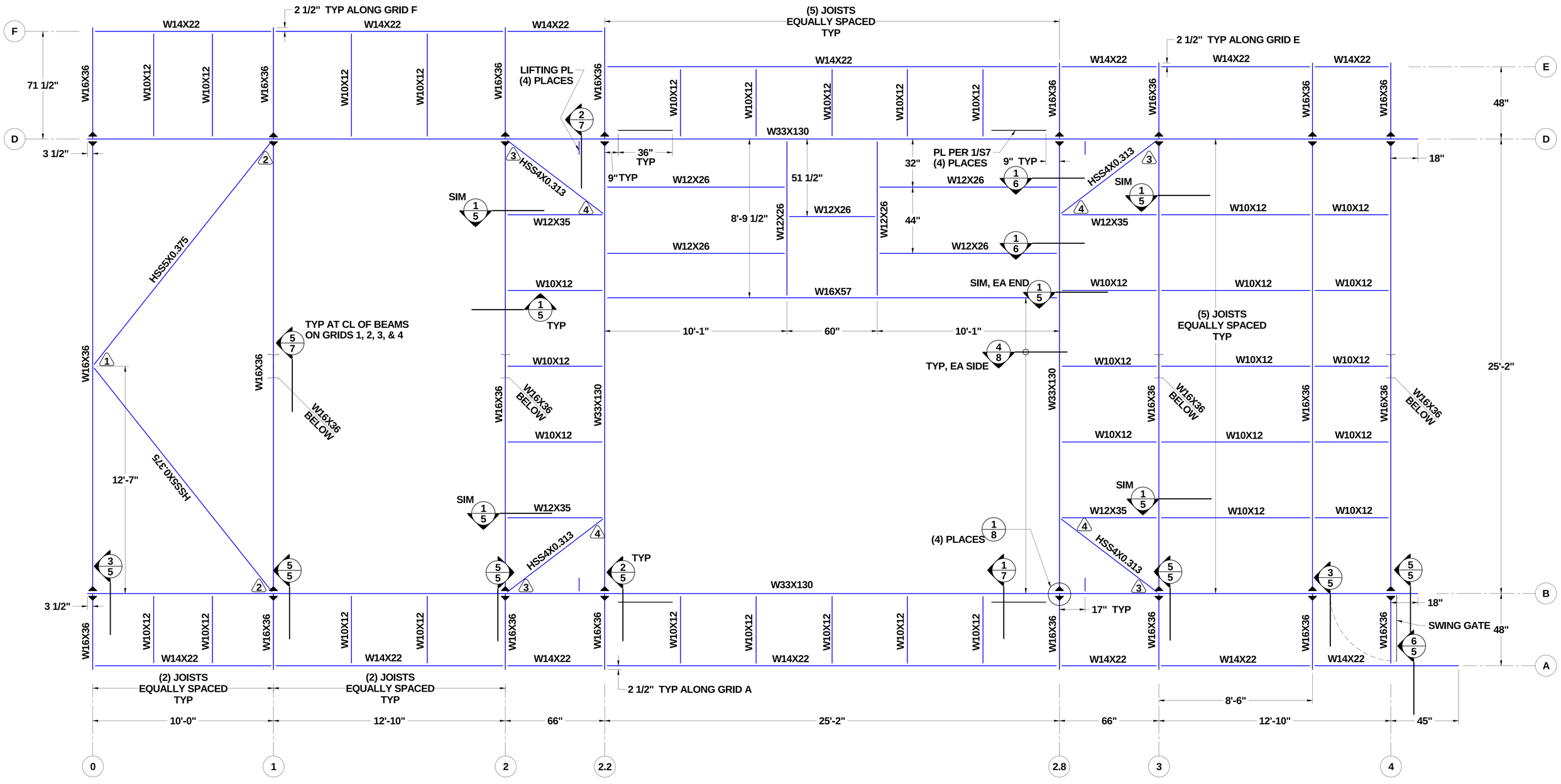

BRIDGE PLAN VIEW

1/3

T/STL EL = 0'-0"

NOTE: ALL CONNECTIONS ALONG GRID D ARE SIMILAR BUT OPPOSITE TO CONNECTIONS ALONG GRID B.

N

S

PUGET SOUND NAVAL SHIPYARD
CODE 2370
ENGINEERING DIVISION

NO DEVIATIONS SHALL BE MADE WITHOUT CODE 2370 APPROVAL

DRAWING NO. **2370-1830**

TITLE **RAE BRIDGE (DD1)**

SCALE N/A | **Sheet 3 of 20** | REV. **ORIG**

SHEET 3 | REV. ORIG | TITLE RAE BRIDGE (DD1) | DWG. NO. 2370-1830

REMOVABLE SECTION OF GRATING AT LIFTING LUGS PER 3/S7, (4) PLACES

MCNICHOLS GW-125 BAR GRATING OR EQUIVALENT

GRATING FLUSH WITH OUTSIDE GIRDER FLANGE ALONG GRIDS B, D, 2.2, & 2.8.

PER 2/S11

GRATING ATTACHMENT PER 6/S7, TYP

HANDRAIL PER 5/S11

27" 25'-2" 27" 48" 48" 24" 36" 36" 24" 24" 36" 36" 24"

10'-0" 12'-10" 66" 25'-2" 66" 12'-10"

0 1 2 2.2 2.8 3 4

A B D E

H1 H1 H1 H1 H1

1/11 3/8 3/8 6/7 3/11 2/8 1/11 3/8 6/11 1/9 2/9 3/9

INDICATES GRATING SPAN IN E-W DIRECTION

INDICATES GRATING SPAN IN N-S DIRECTION

N S

1/4 BRIDGE GRATING PLAN

AT A MINIMUM, THE WELD ATTACHMENTS FOR EACH GRATING PANEL SHALL BE PLACED AT EACH OF THE FOUR CORNERS OF THE PANEL AND TO AN INTERMEDIATE SUPPORT IN THE MIDDLE OF THE PANEL (WHERE OCCURS). ADDITIONAL ATTACHMENTS WELDS MAY BE MADE.

3/16 3/4" MIN

CUT BEARING BARS OF FLOOR GRATING AS REQUIRED TO ACCOMODATE STRUCTURAL MEMBERS OR STANCHION BASES BAND CUT BARS PER METAL BAR GRATING MANUAL, TYP

INTERIOR SUPPORT

EXTERIOR SUPPORT

BEARING BAR

2/4 GRATING ATTACHMENT DETAIL

NOTE: BAND ALL CUT BEARING BARS.

PUGET SOUND NAVAL SHIPYARD
CODE 2370
ENGINEERING DIVISION

NO DEVIATIONS SHALL BE MADE WITHOUT CODE 2370 APPROVAL

DRAWING NO. 2370-1830

TITLE RAE BRIDGE (DD1)

SCALE N/A | Sheet 4 of 20 | REV. ORIG

SHEET 4 | REV. ORIG | TITLE RAE BRIDGE (DD1) | DWG. NO. 2370-1830

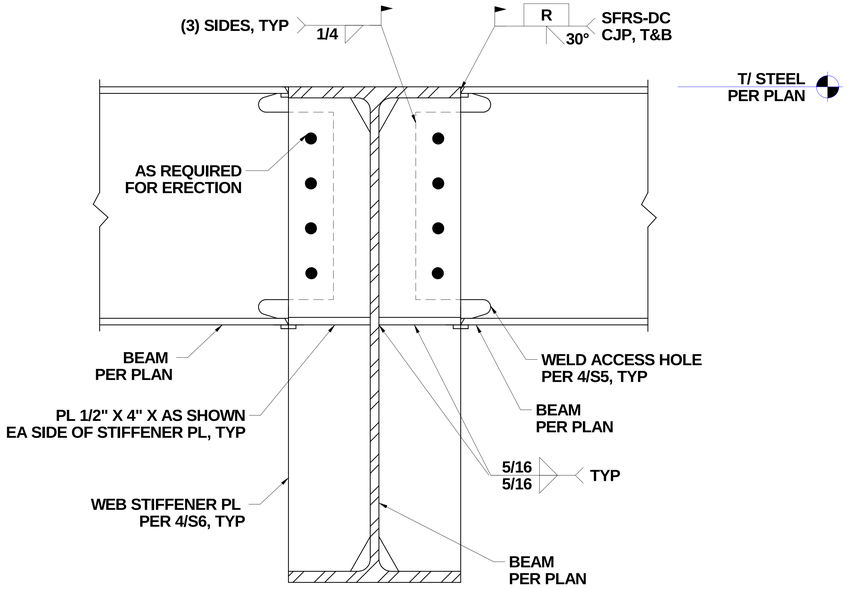

3/5 MOMENT CONNECTION

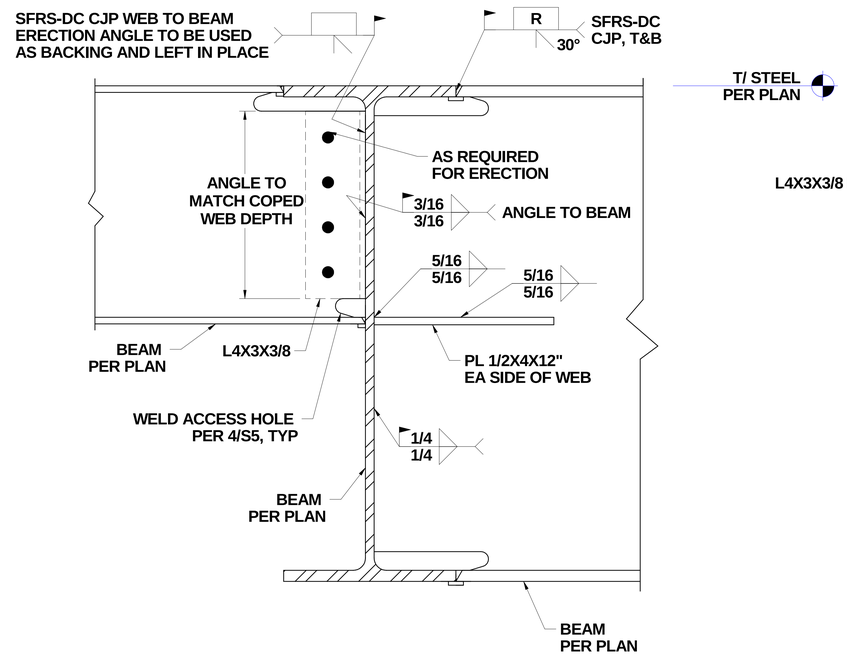

2/5 MOMENT CONNECTION AT VARYING BEAM DEPTHS

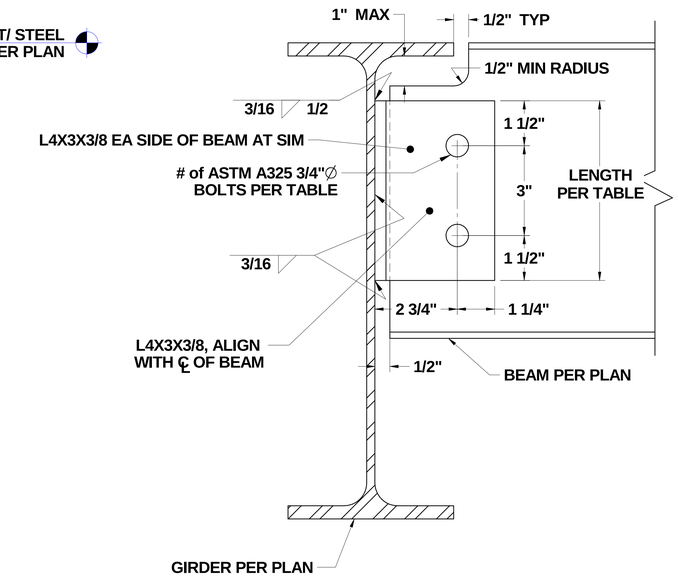

BEAM TYPE	ROWS OF BOLTS	LENGTH (IN)
W10	2	6
W12	3	9
W14	3	9
W16	4	12

1/5 TYP SHEAR CONNECTION

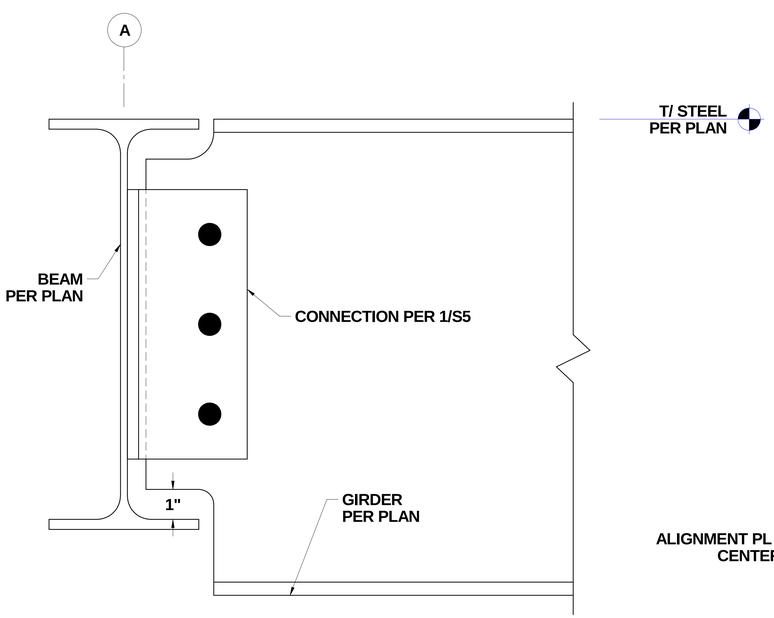

6/5 COPED BEAM CONNECTION

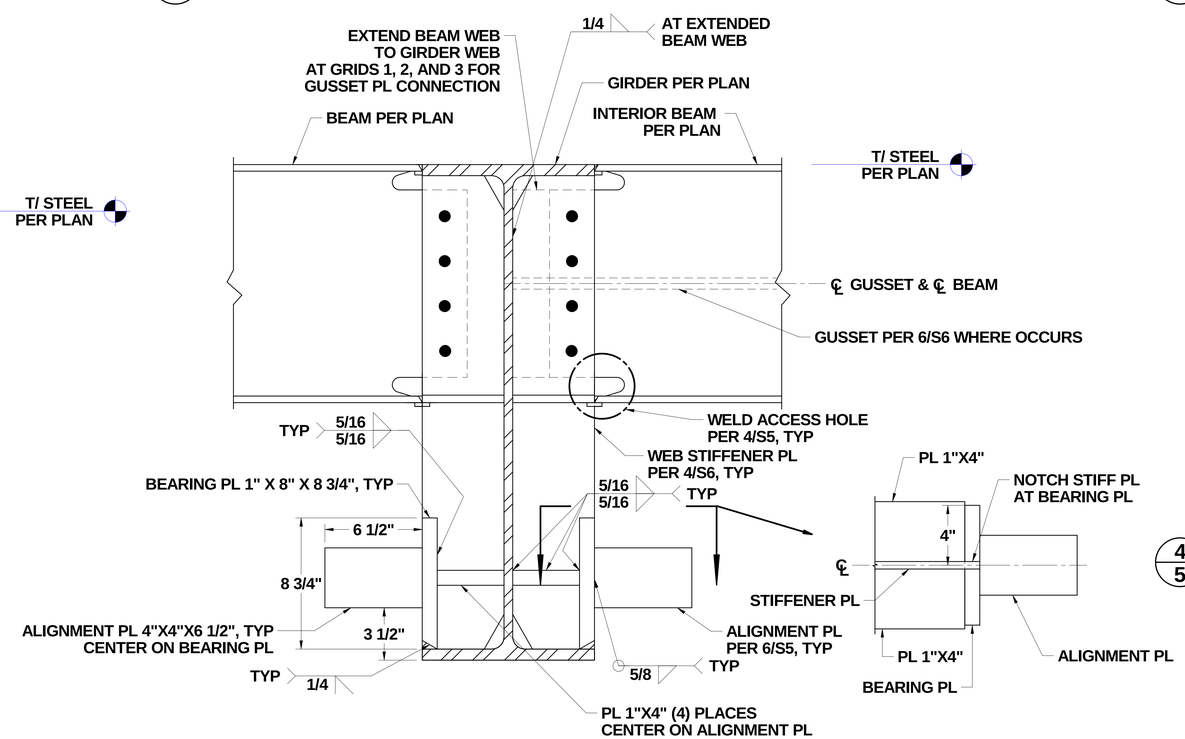

5/5 MOMENT CONNECTION AT BRIDGE TO TOWER ATTACHMENT

NOTE: FOR INFORMATION NOT SHOWN, REF 3/S5.

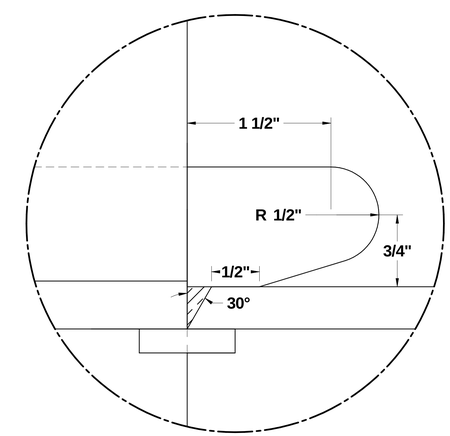

4/5 WELD ACCESS HOLE

NOTE: USE ACCESS HOLE TYPE B. DIMENSIONS IN ACCORDANCE WITH AWS D1.8 / D1.8M SUBCLAUSE 6.10.1.

PUGET SOUND NAVAL SHIPYARD
CODE 2370
ENGINEERING DIVISION

NO DEVIATIONS SHALL BE MADE
WITHOUT CODE 2370 APPROVAL

DRAWING NO. 2370-1830

TITLE RAE BRIDGE (DD1)

SCALE N/A | Sheet 5 of 20 | REV. ORIG

SHEET 5 | REV. ORIG | TITLE RAE BRIDGE (DD1) | DWG. NO. 2370-1830

Gusset Number			1	2	3	4
Brace Member Section			HSS5X0.375	HSS5X0.375	HSS4X0.313	HSS4X0.313
Reinforcement Thickness	t_{rein}	in	1/2	1/2	3/8	3/8
Reinforcement Weld		in	5/16	5/16	1/4	1/4
Reinforcement Length	L_{rein}	in	18	18	16	16
Beam Member Section			W16X36	W16X36	W12X35	W33X130
Girder Member Section			NA	W33X130	W33X130	W16X36
Thickness	t_{gusset}	in	3/4	3/4	3/4	3/4
Gusset-to-Girder Connection Length	A	in	14.600	8.580	10.588	10.633
Gusset-to-Beam Connection Length	B	in	18.107	10.716	14.506	13.913
Detailing Dimension 1	L_1	in	5.480	5.480	4.771	4.771
Detailing Dimension 2	L_2	in	14.233	8.720	11.773	11.645
Detailing Dimension 3	L_3	in	5.614	5.777	6.113	6.211
Detailing Dimension 4	L_4	in	4.355	4.355	3.638	3.638
Detailing Dimension 5	L_5	in	19.365	12.139	16.981	16.486
Detailing Dimension 6	L_6	in	NA	5.620	5.956	5.782
Lap With Brace	L_b	in	11	11	10	10
Weld Gap		in	NA	1	1	1
Beam Edge Stiffener			Yes	Yes	Yes	Yes
Girder Edge Stiffener			No	Yes	Yes	Yes
Weld Size Brace-to-Gusset		in	5/16	3/8	5/16	5/16
Weld Size Beam-to-Gusset		in	5/16	3/8	3/8	3/8
Weld Size Girder-to-Gusset		in	NA	3/8	3/8	3/8

* Nominal values in decimal form are provided for dimensions A, B, L1, L2, L3, L4, L5 and L6. The tolerance for these dimensions is + 1/16".

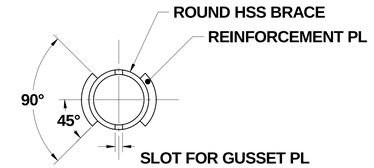

2/6 BRACE CROSS-SECTION AT REINFORCEMENT

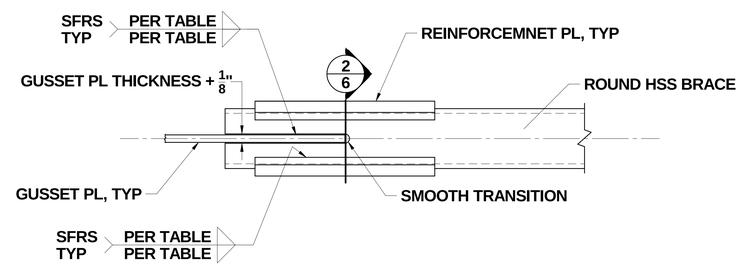

3/6 BRACE DETAIL

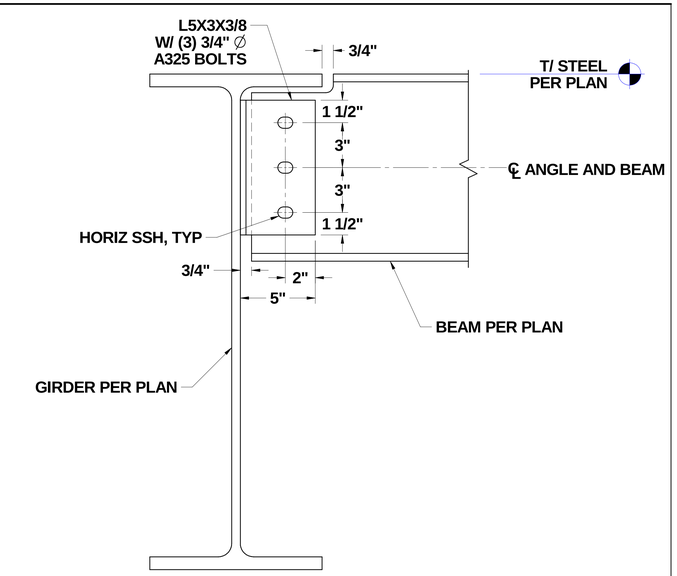

1/6 BEAM HORIZONTAL SLIP CONNECTION

NOTE: FOR INFORMATION NOT SHOWN, REFERENCE 1/S5.

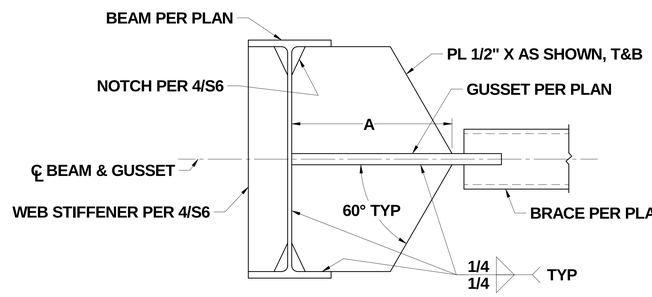

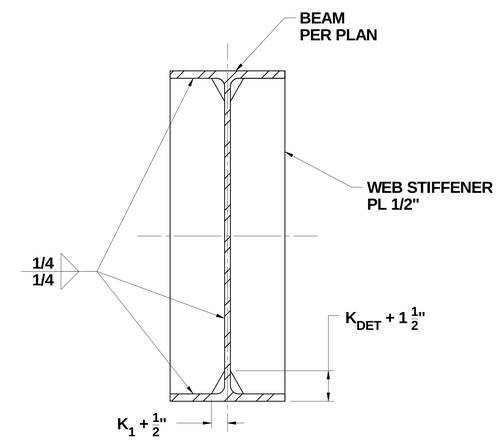

4/6 WEB STIFFENER PLATE DETAIL

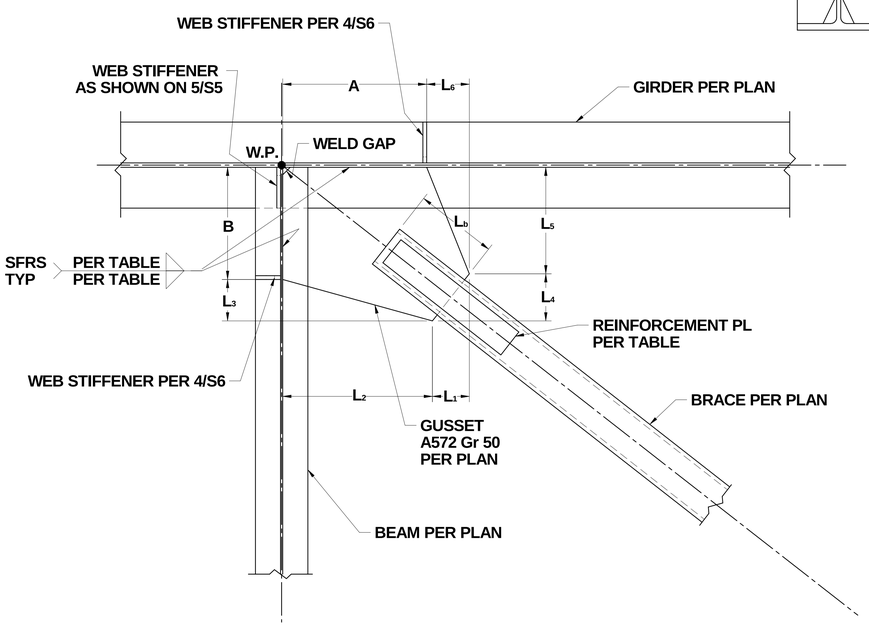

6/6 GUSSET PL CONNECTION TO BEAM WEBS

NOTE: TOP BEAM FLANGE NOT SHOWN FOR CLARITY.

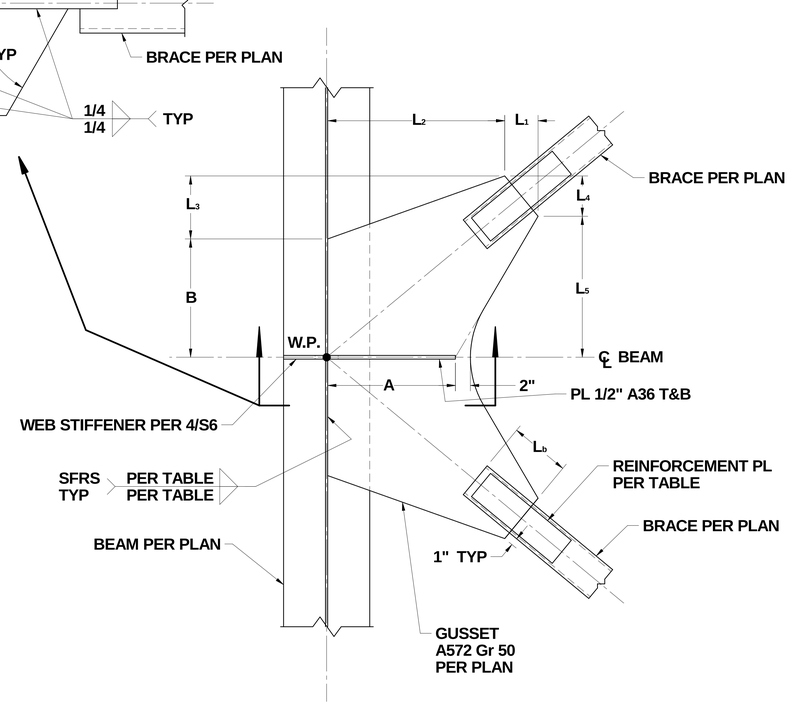

5/6 GUSSET PL CONNECTION TO BEAM MIDSPAN

NOTE: TOP BEAM FLANGE NOT SHOWN FOR CLARITY.

PUGET SOUND NAVAL SHIPYARD
CODE 2370
ENGINEERING DIVISION

NO DEVIATIONS SHALL BE MADE
WITHOUT CODE 2370 APPROVAL

DRAWING NO. 2370-1830

TITLE RAE BRIDGE (DD1)

SCALE N/A | Sheet 6 of 20 | REV. ORIG

SHEET 6 | REV. ORIG | TITLE RAE BRIDGE (DD1) | DWG. NO. 2370-1830

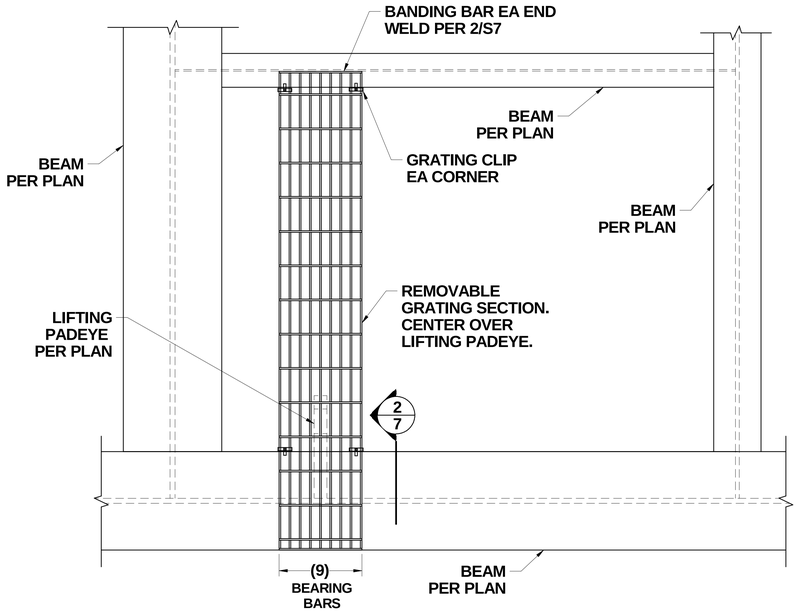

3/7 REMOVABLE GRATING AT LIFTING CONNECTION

NOTE: PERMANENT GRATING NOT SHOWN FOR CLARITY.

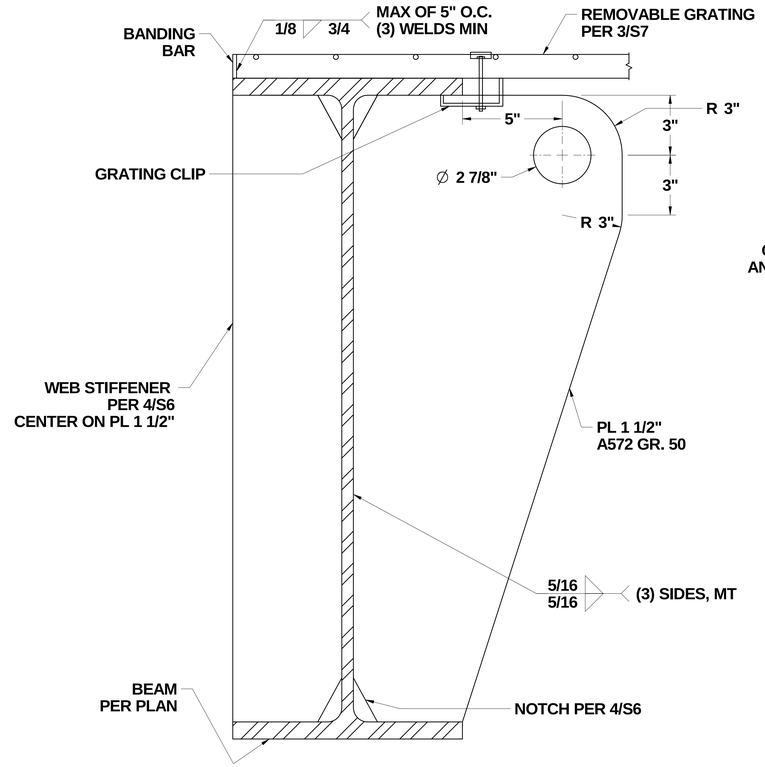

2/7 BRIDGE LIFTING PADEYE

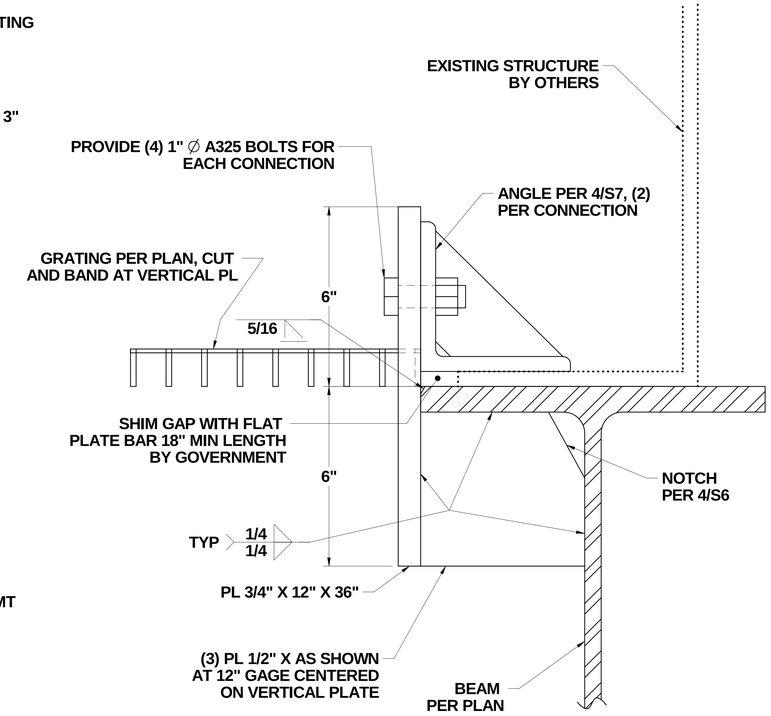

1/7 N-S RAE TO BRIDGE CONNECTION

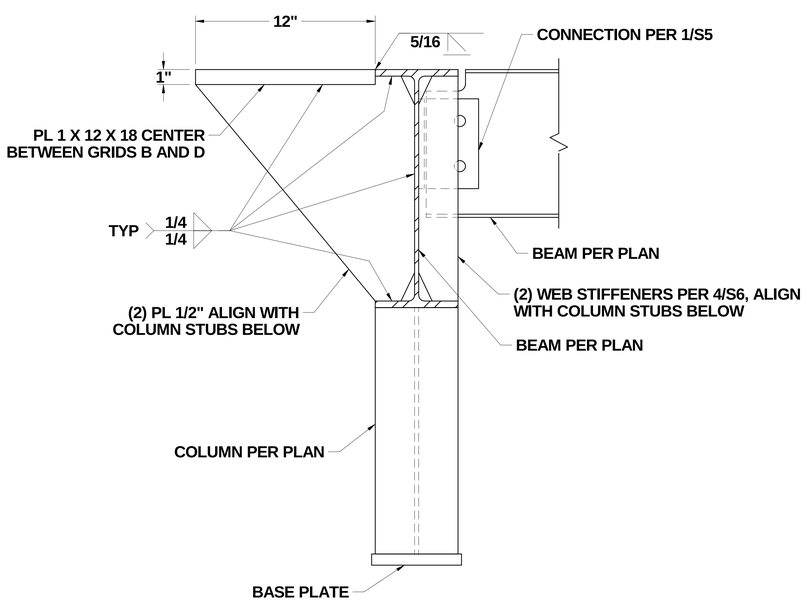

6/7 INTERIOR BRIDGE TO TOWER BEARING SUPPORT

AT GRID 2, FOR INFORMATION NOT SHOWN REFERENCE 5/S7

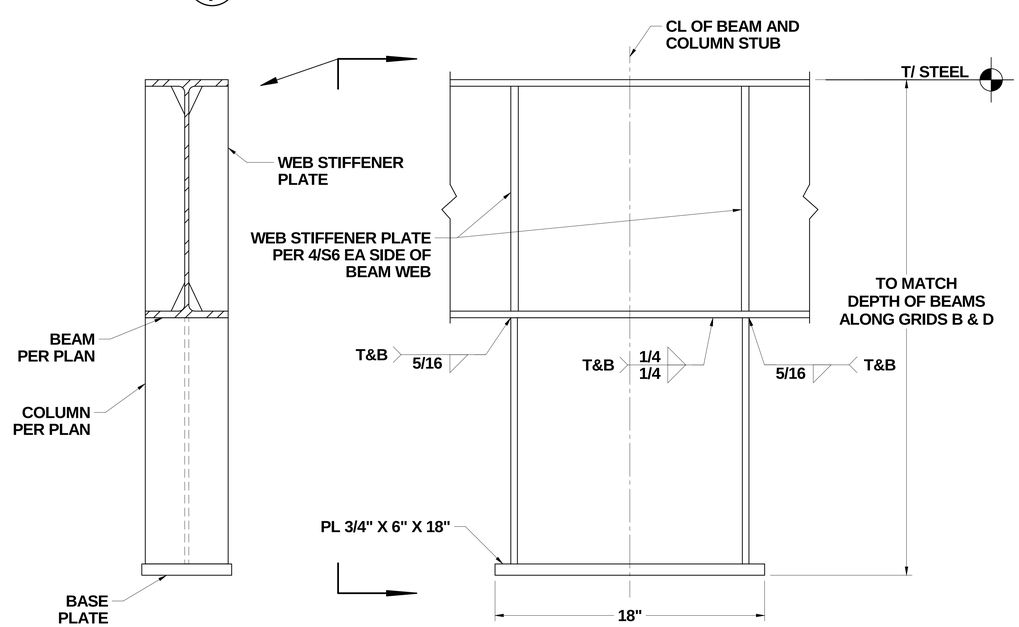

5/7 INTERIOR BRIDGE TO TOWER BEARING SUPPORT

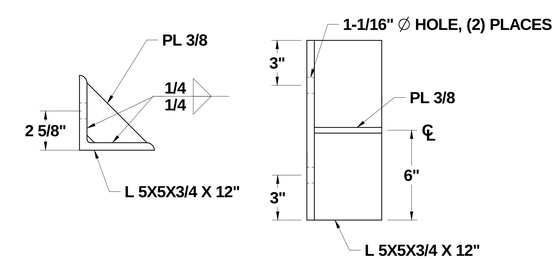

4/7 RAE CONNECTION ANGLE

PUGET SOUND NAVAL SHIPYARD
CODE 2370
ENGINEERING DIVISION

NO DEVIATIONS SHALL BE MADE
WITHOUT CODE 2370 APPROVAL

DRAWING NO. 2370-1830

TITLE **RAE BRIDGE (DD1)**

SCALE N/A | Sheet 7 of 20 | REV. ORIG

SHEET 7 | REV. ORIG | TITLE RAE BRIDGE (DD1) | DWG. NO. 2370-1830

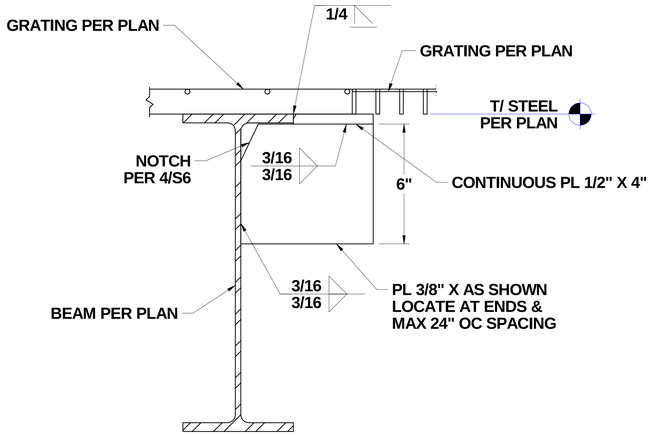

3/8 E-W GRATING SUPPORT DETAIL

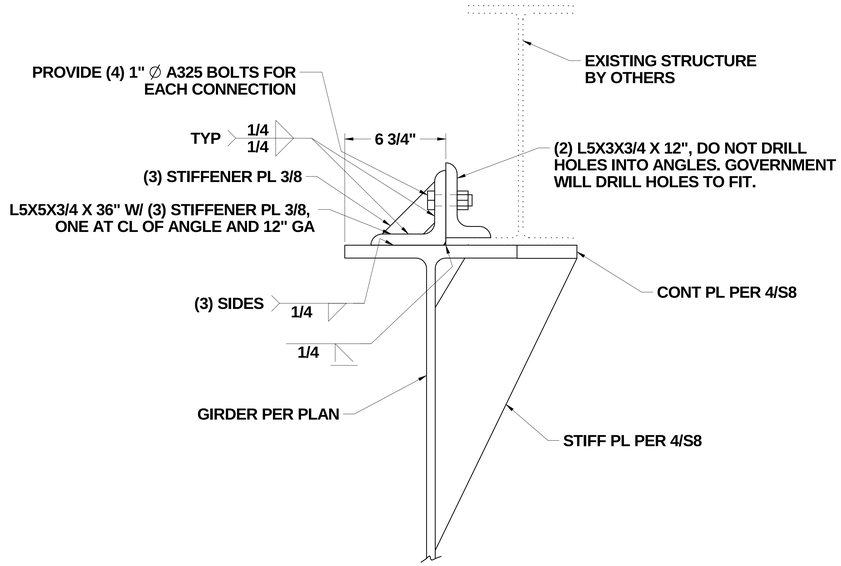

2/8 E-W RAE TO BRIDGE CONNECTION

NOTE: FABRICATE (4) PLATES PER BRIDGE.

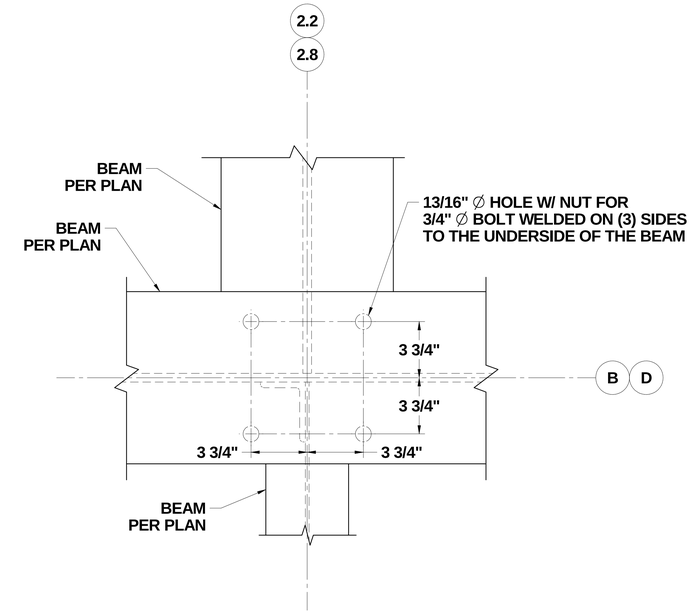

1/8 BRIDGE CONNECTION HOLES

NOTE: INSTALL RAE ALIGNMENT PIN IN NW AND SW CORNERS.

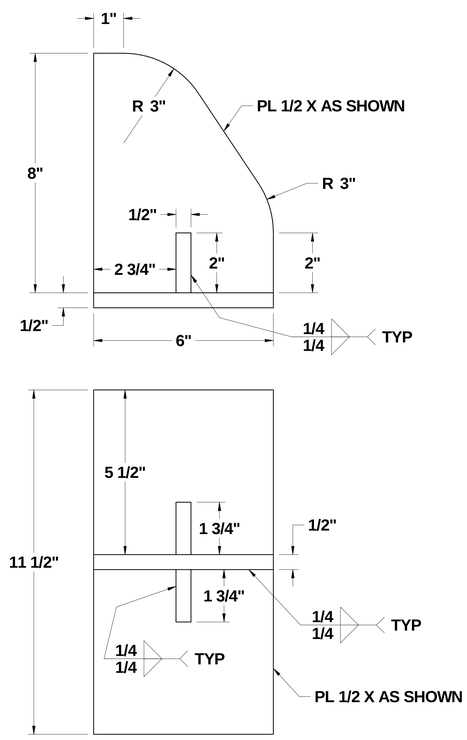

6/8 MURE ALIGNMENT PLATE FOR W33X130 BEAM

NOTE: FABRICATE TWO ALIGNMENT PLATES.
INSTALLATION SHALL BE BY THE GOVERNMENT.

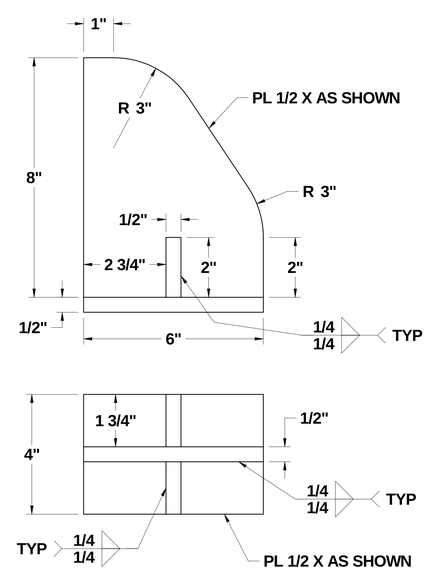

5/8 MURE ALIGNMENT PLATE FOR W10X12 BEAM

NOTE: FABRICATE TWO ALIGNMENT PLATES.
INSTALLATION SHALL BE BY THE GOVERNMENT.

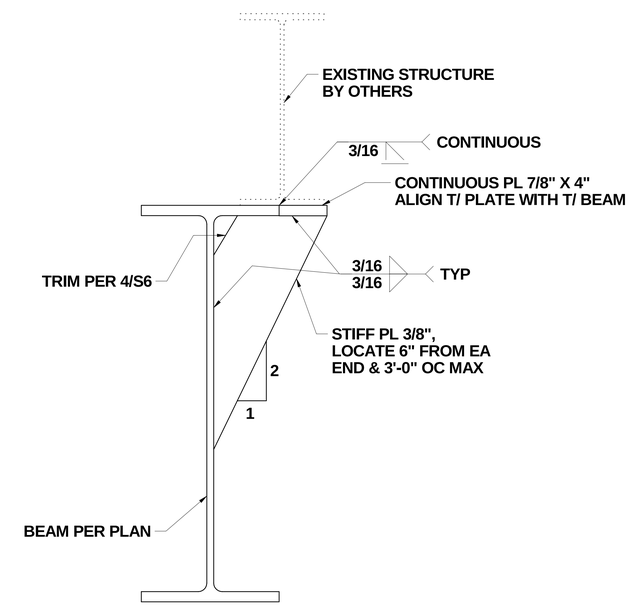

4/8 BEAM FLANGE EXTENSION

PUGET SOUND NAVAL SHIPYARD
CODE 2370
ENGINEERING DIVISION

NO DEVIATIONS SHALL BE MADE
WITHOUT CODE 2370 APPROVAL

DRAWING NO. **2370-1830**

TITLE **RAE BRIDGE (DD1)**

SCALE N/A | **Sheet 8 of 20** | REV. **ORIG**

SHEET 8 | REV. ORIG | TITLE RAE BRIDGE (DD1) | DWG. NO. 2370-1830

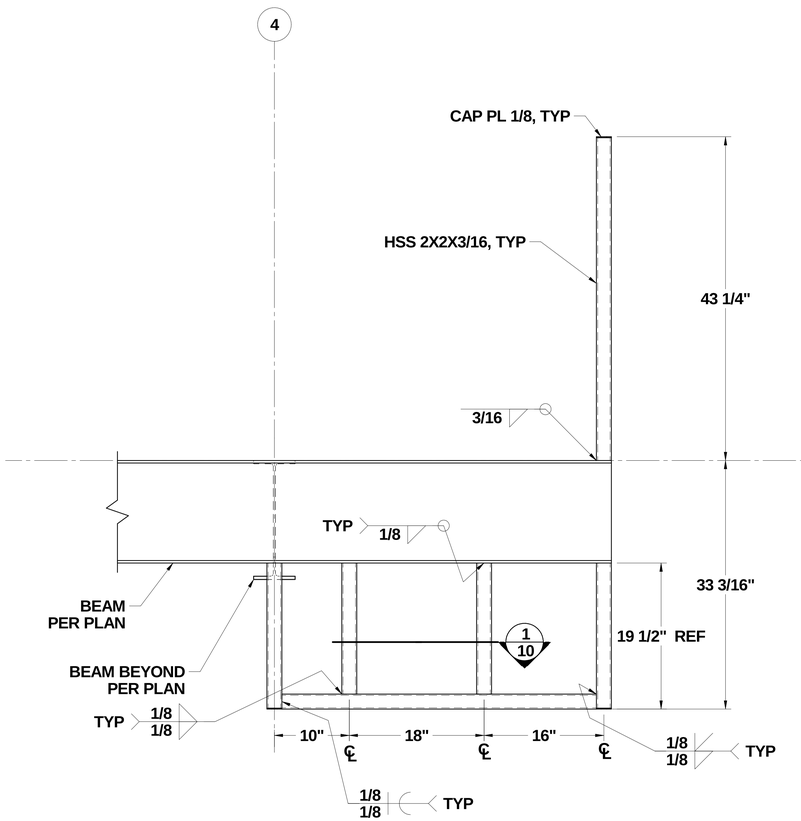

3/9 CAGE VIEW ON GRID A

NOTE: LADDER SUPPORT STEEL PER 1/S10

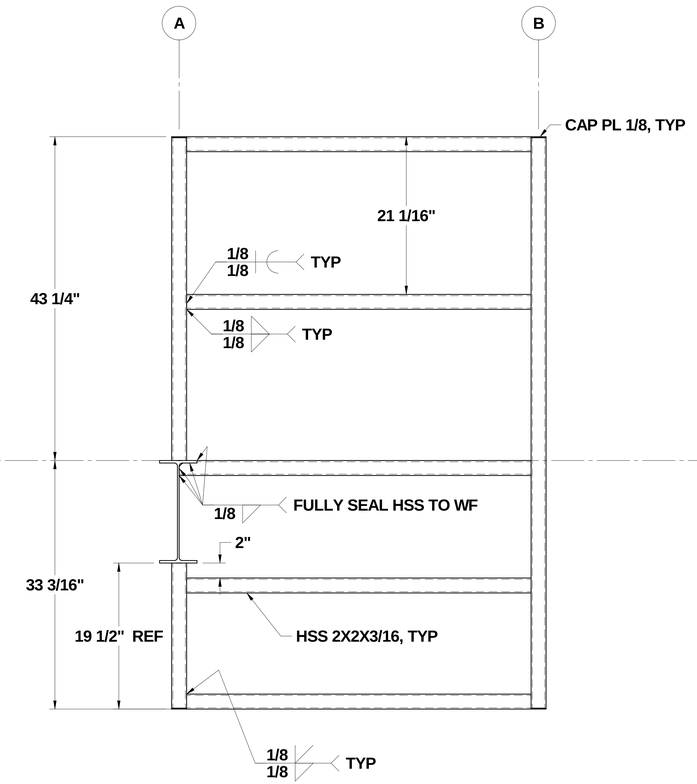

2/9 CAGE VIEW ON GRID 4 + 45"

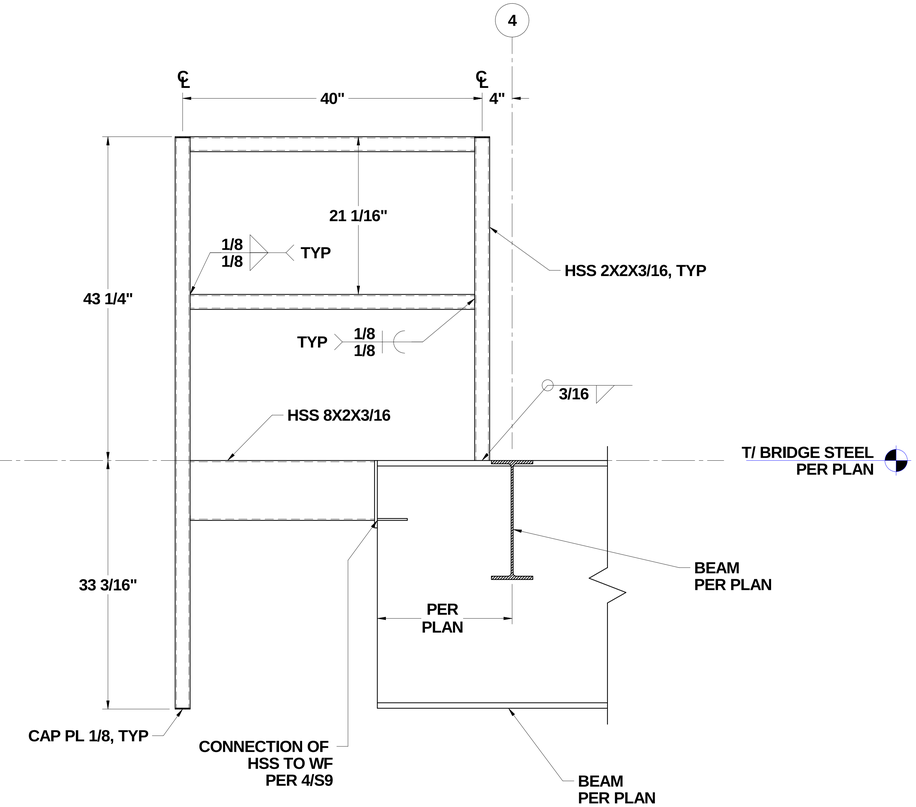

1/9 CAGE VIEW ON GRID B

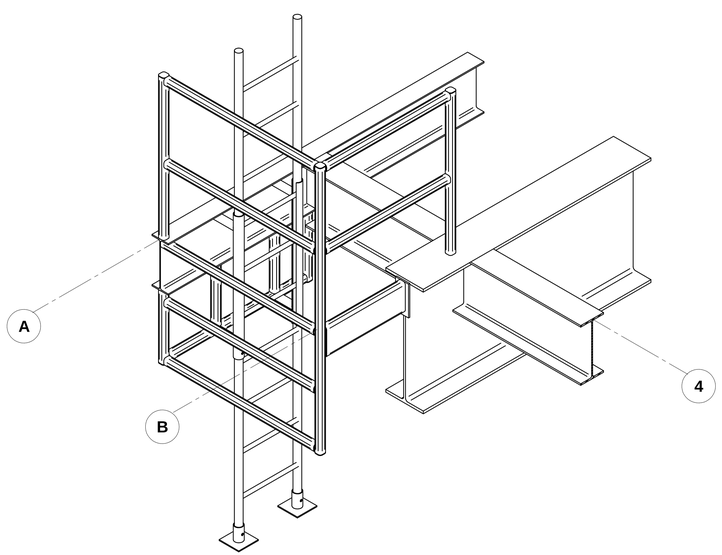

5/9 ISO VIEW OF STAIR CAGE ASSEMBLY

NOTE: BRIDGE HANDRAILS AND SWING-GATE NOT SHOWN

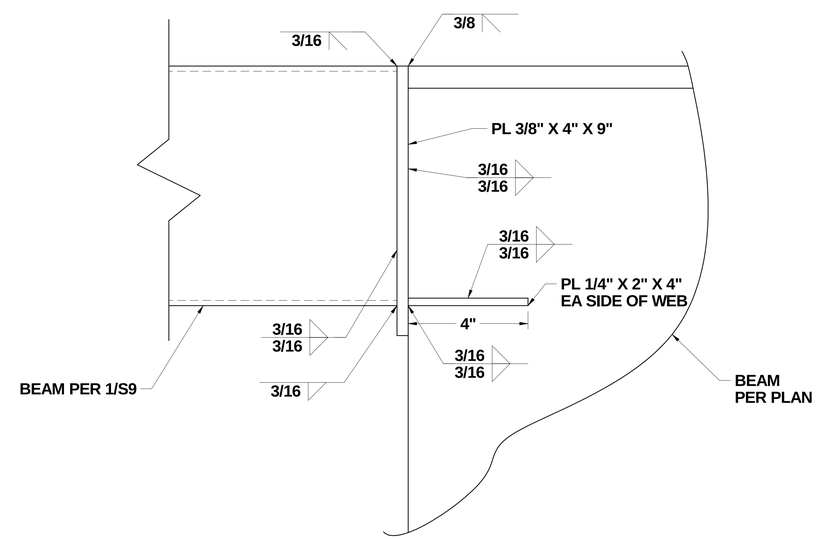

4/9 HSS TO WF CONNECTION

PUGET SOUND NAVAL SHIPYARD
CODE 2370
ENGINEERING DIVISION

NO DEVIATIONS SHALL BE MADE WITHOUT CODE 2370 APPROVAL

DRAWING NO. **2370-1830**

TITLE **RAE BRIDGE (DD1)**

SCALE N/A | **Sheet 9 of 20** | REV. **ORIG**

SHEET 9 | REV. ORIG | TITLE RAE BRIDGE (DD1) | DWG. NO. 2370-1830

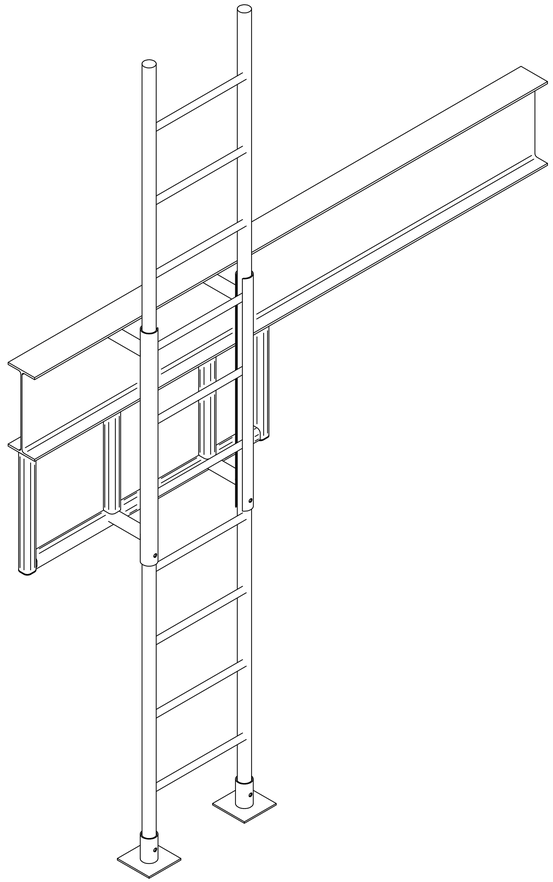

NOTE: CONDUCT FUNCTIONAL TEST TO ENSURE LADDER SLIDES FULLY UP AND DOWN WITHIN THE INSTALLED LADDER SUPPORT.

2/10 LADDER SUPPORT ISO VIEW

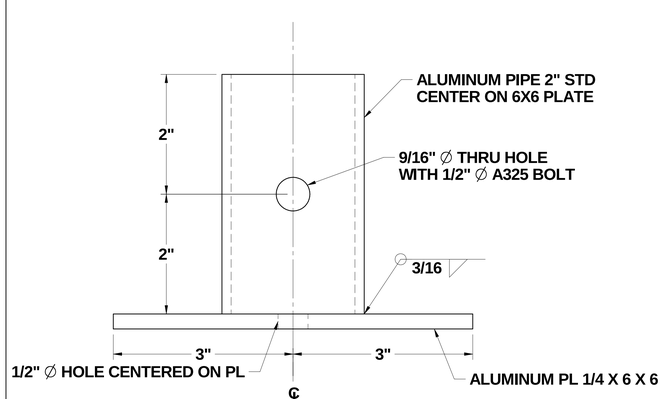

5/10 LADDER BASE

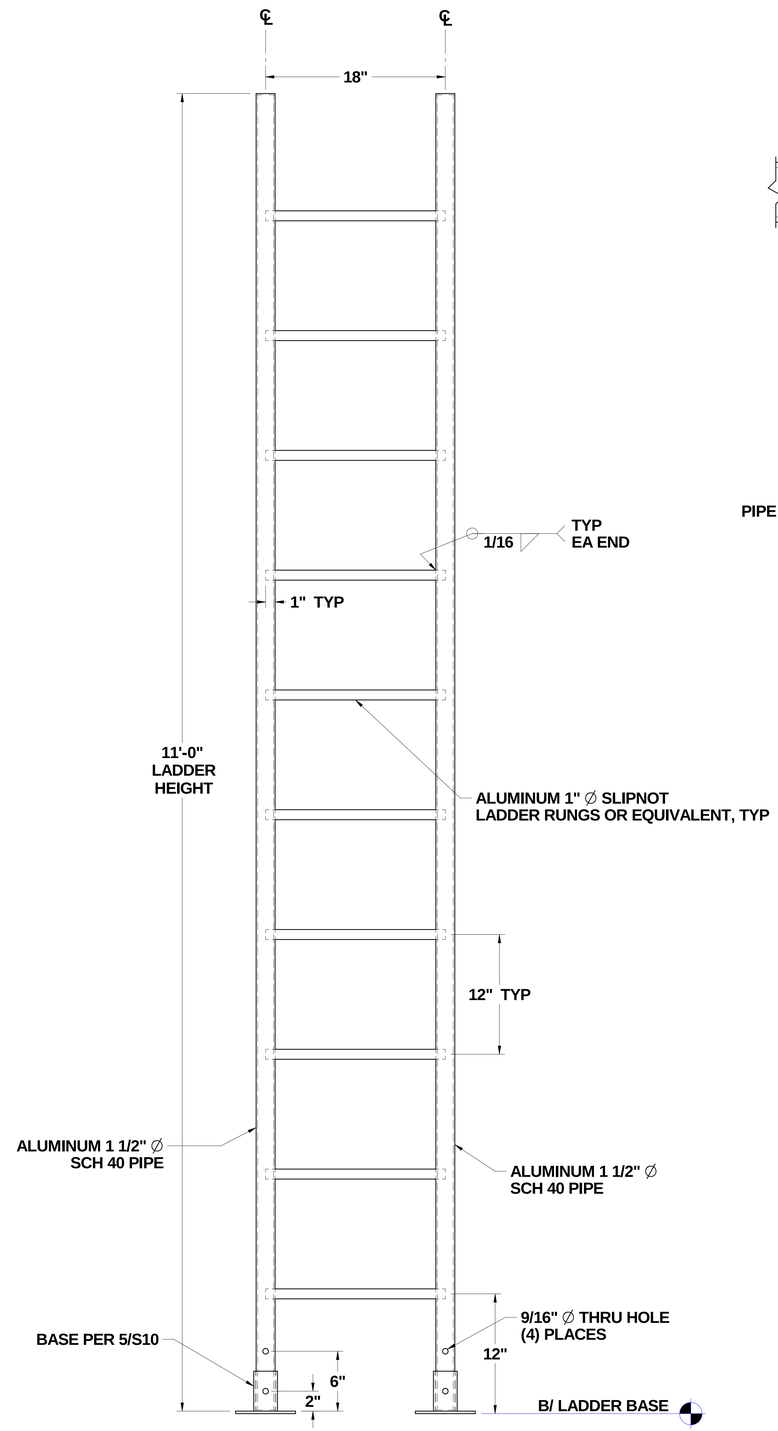

4/10 LADDER DETAIL

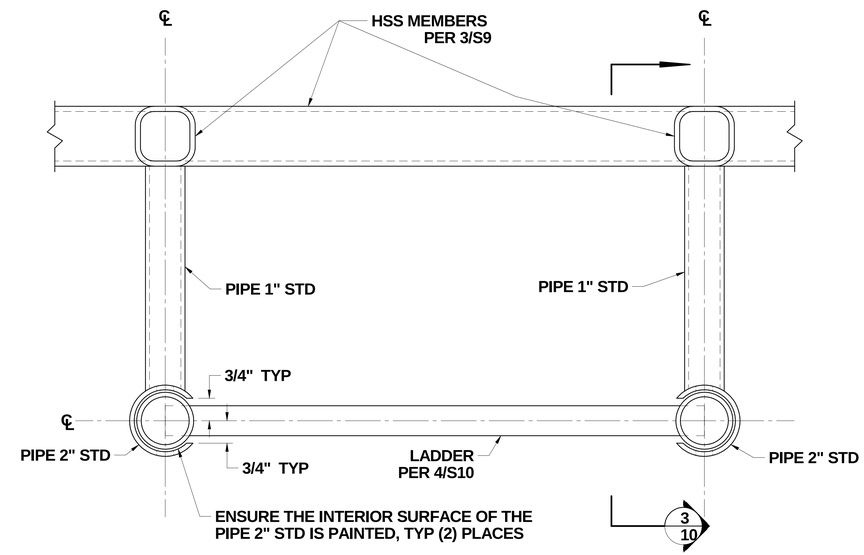

1/10 LADDER SUPPORT

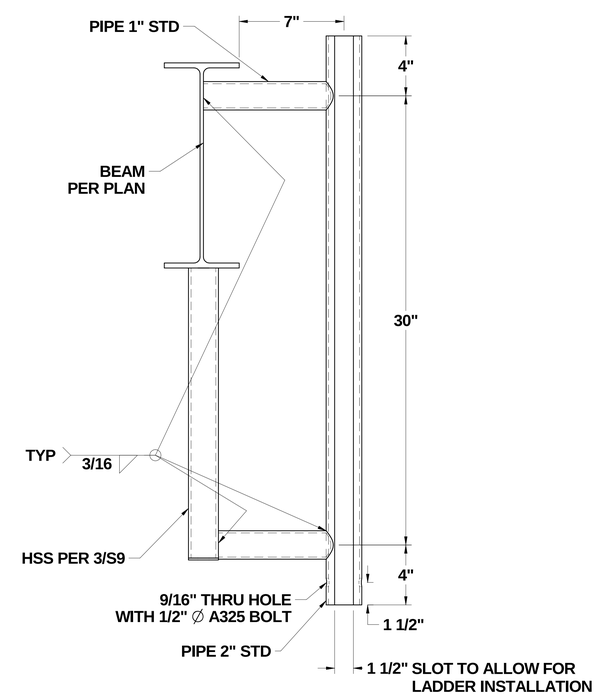

3/10 LADDER SUPPORT SECTION

NOTE: LADDER NOT SHOWN FOR CLARITY.

PUGET SOUND NAVAL SHIPYARD
CODE 2370
ENGINEERING DIVISION

NO DEVIATIONS SHALL BE MADE
WITHOUT CODE 2370 APPROVAL

DRAWING NO. **2370-1830**

TITLE **RAE BRIDGE (DD1)**

SCALE N/A | **Sheet 10of 20** | REV. **ORIG**

SHEET 10 | REV. ORIG | TITLE RAE BRIDGE (DD1) | DWG. NO. 2370-1830

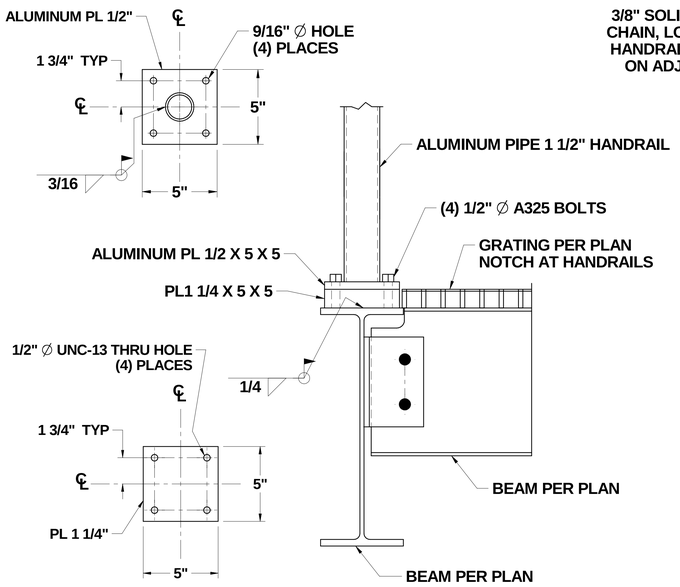

3/11 REMOVABLE HANDRAIL BASE

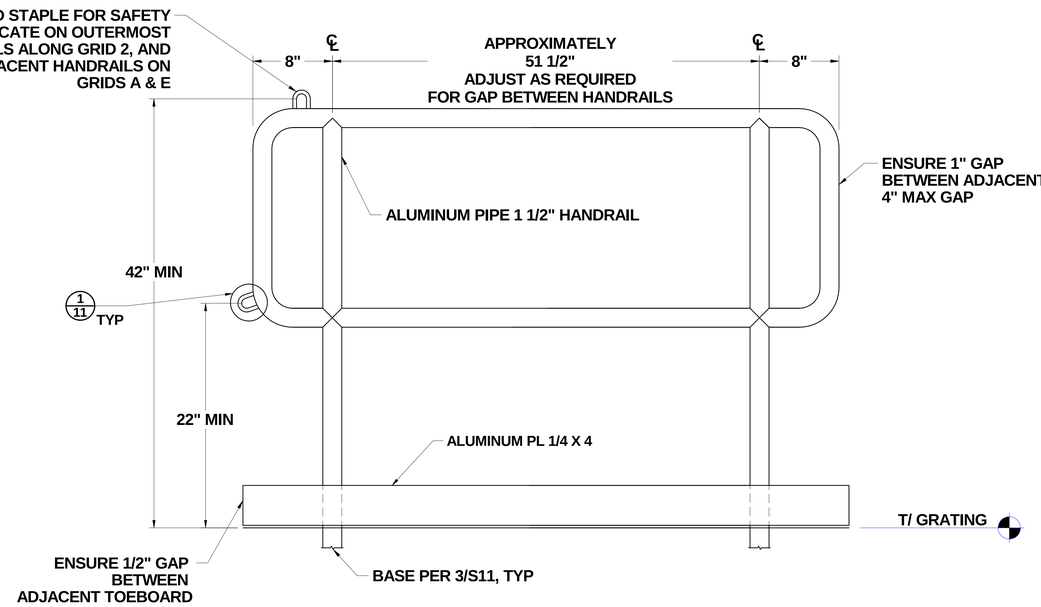

2/11 H1 REMOVABLE HANDRAIL

NOTE: (5) REQUIRED PER BRIDGE.
FOR INFORMATION NOT SHOWN REFERENCE 5/S11.

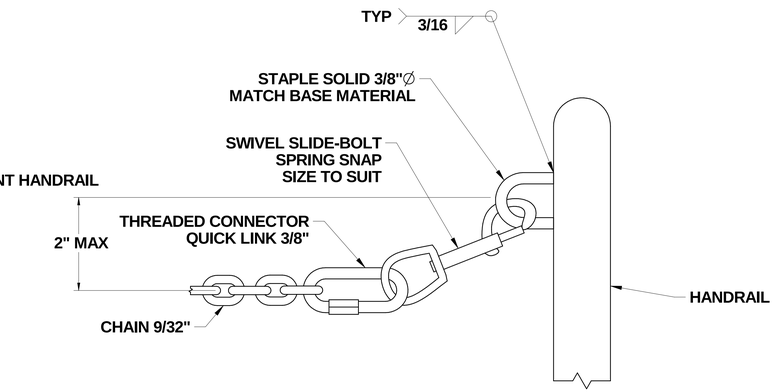

1/11 HANDRAIL CHAIN CONNECTION

TYP BOTH SIDES OF OPENING

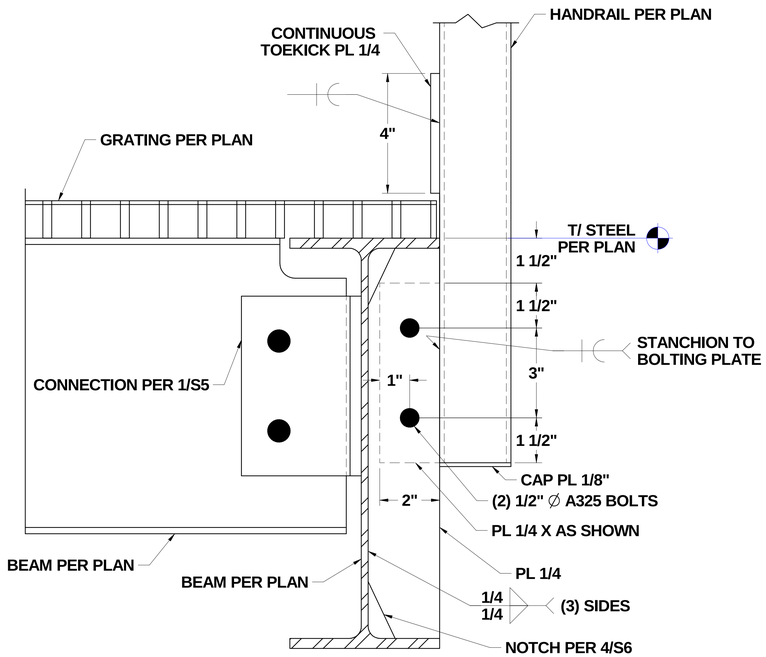

6/11 HANDRAIL CONNECTION

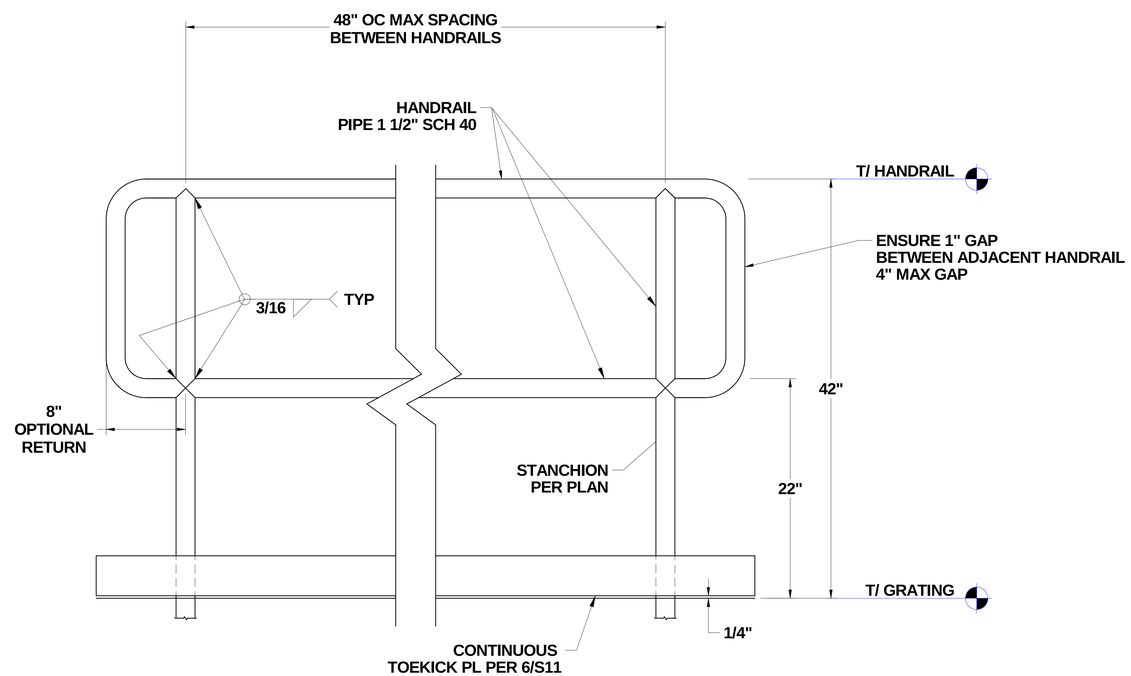

5/11 TYPICAL HANDRAIL CONSTRUCTION

NOTE: HANDRAIL CORNERS MAY BE ROUNDED OR MITRED.

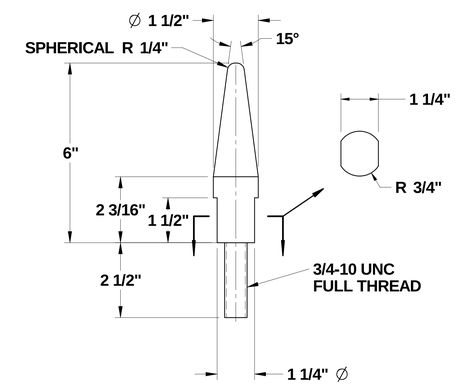

4/11 RAE ALIGNMENT PIN

NOTE: FABRICATE TWO PINS PER BRIDGE

PUGET SOUND NAVAL SHIPYARD
CODE 2370
ENGINEERING DIVISION

NO DEVIATIONS SHALL BE MADE
WITHOUT CODE 2370 APPROVAL

DRAWING NO. 2370-1830

TITLE **RAE BRIDGE (DD1)**

SCALE N/A | **Sheet 11of 20** | REV. **ORIG**

SHEET 11 | REV. ORIG | TITLE RAE BRIDGE (DD1) | DWG. NO. 2370-1830

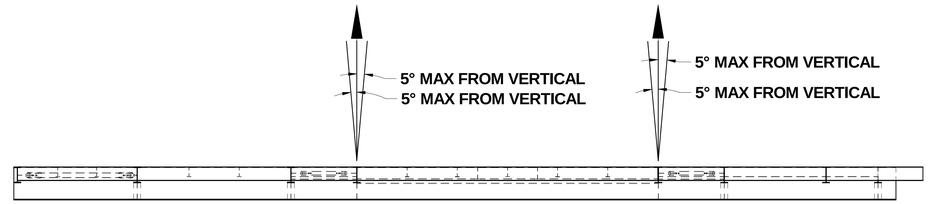

4/12 LOAD TEST CONFIGURATION

NOTE: COAMING AND HANDRAILS NOT SHOWN FOR CLARITY

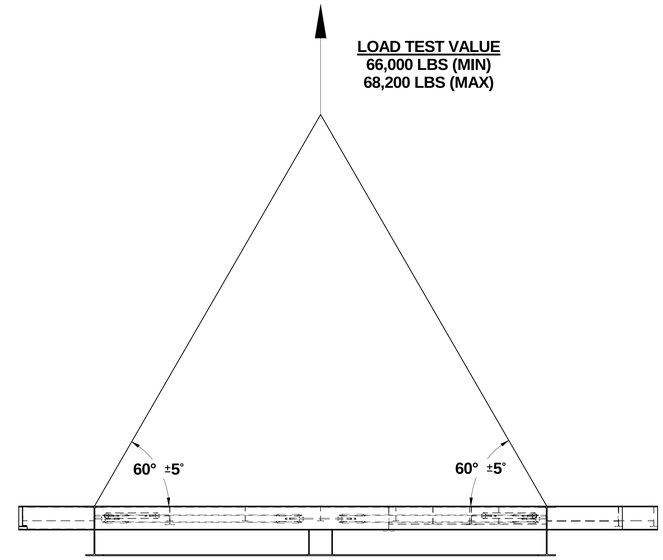

1/12 LOAD TEST CONFIGURATION

NOTE: COAMING AND HANDRAILS NOT SHOWN FOR CLARITY

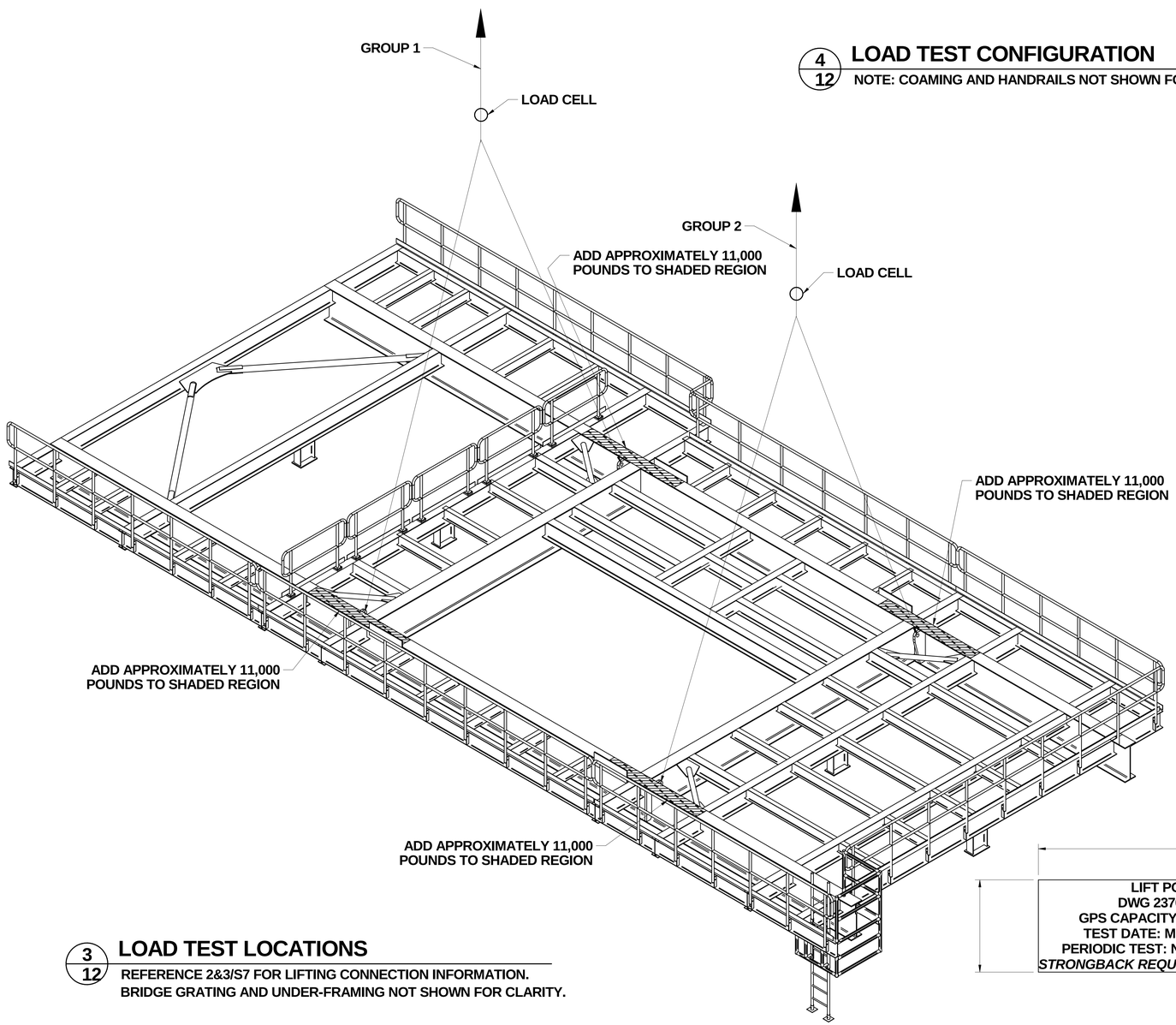

3/12 LOAD TEST LOCATIONS

REFERENCE 2&3/S7 FOR LIFTING CONNECTION INFORMATION.
BRIDGE GRATING AND UNDER-FRAMING NOT SHOWN FOR CLARITY.

LIFT POINT
DWG 2370-1830
GPS CAPACITY: 22,000 LBS
TEST DATE: MM-DD-YYYY
PERIODIC TEST: NOT REQUIRED
STRONGBACK REQUIRED FOR LIFTING

2/12 LABEL PLATE FOR LIFT POINT

TYPICAL (4) PLACES

LOAD TESTING AND NDT FOR BRIDGE STRUCTURE:

I. PRIOR TO AND FOLLOWING LOAD TEST, INSPECT EACH LIFT PAD (2/S7) AS FOLLOWS:

- **A) MATERIAL:** MT THE ACCESSIBLE PORTIONS OF THE LIFT PAD MATERIAL PER NAVSEA PUBLICATION T9074-AS-GIB-010/271. USE THE ACCEPTANCE CRITERIA OF MIL-STD-2035, FORGINGS AND WROUGHT MATERIAL. VISUALLY INSPECT FOR DEFORMATION OR OBVIOUS DAMAGE SUCH AS CRACKED, DISTORTED, OR CORRODED MATERIAL, OR ANY DEFICIENCY THAT MAY AFFECT THE LIFTING CAPACITY OF THE LIFT PAD.
- **B) WELDS:** MT THE ACCESSIBLE PORTIONS OF THE LIFT PAD ATTACHMENT WELDS PER NAVSEA PUBLICATION T9074-AS-GIB-010/271. USE THE ACCEPTANCE CRITERIA OF MIL-STD-2035, CLASS 3 FOR WELDS. VISUALLY INSPECT PER AWS D1.1 CLAUSE 6 PART C.

II. WEIGH THE BRIDGE PRIOR TO LOAD TESTING THE BRIDGE LIFT PADS. IF THE ASSEMBLED BRIDGE WEIGHS MORE THAN 88,000 POUNDS CONTACT PSNS CODE 2370.24 FOR REVISED LOAD TEST WEIGHTS.

III. ATTACH APPROXIMATELY 11,000 POUNDS OF TEST WEIGHT OVER THE BRIDGE GIRDER BEAMS ALONG GRIDS B & D NEAR EACH LIFT POINT BEING TESTED (TOTAL OF 44,000 POUNDS). THE TOTAL LOAD TEST WEIGHT FOR EACH GROUP OF LIFTING PADS SHALL BE 66,000 POUNDS (+ 2,200 POUNDS, - 0 POUNDS). ADJUST WEIGHT AS NECESSARY TO ACHIEVE THE REQUIRED WEIGHT. IF ATTACHING WEIGHT IS NOT FEASIBLE, SEE SECTION V AS AN OPTION.

IV. ATTACH SHACKLES AND PENDANTS OR GROMMETS TO THE LIFT PADS SHOWN IN GROUP ONE. WHEN ASSEMBLED, STRETCHED, AND LIFTED, THE PENDANTS OR GROMMETS SHOULD BE WITHIN 5 DEGREES OF THE PLANE OF THE LIFT PAD, AND APPROXIMATELY 60 DEGREES FROM HORIZONTAL. LIFT THE BRIDGE WITH THE ATTACHED WEIGHTS AND HOLD FOR A MINIMUM OF 10 MINUTES. ENSURE THAT THE LOAD CELL IS READING A TEST VALUE WITHIN THE RANGE SHOWN. REPEAT LOAD TEST FOR THE LIFT PADS SHOWN IN GROUP TWO.

V. IF USING ADDITIONAL TEST WEIGHT IS NOT FEASIBLE, THE FABRICATOR MAY RESTRAIN THE BRIDGE FROM MOVEMENT AND PULL ON THE LIFT PADS SHOWN IN GROUP ONE WITH THE REQUIRED 66,000 POUNDS (+ 2,200 POUNDS, - 0 POUNDS) AND HOLD FOR 10 MINUTES MINIMUM. THE ANGLE OF PULL ON THE LIFT PADS SHALL BE IN THE PLANE OF THE LIFT PAD, APPROXIMATELY 60 DEGREES FROM HORIZONTAL. REPEAT LOAD TEST FOR THE LIFT PADS SHOWN IN GROUP TWO.

VI. CONTRACTOR SHALL PROVIDE WRITTEN DOCUMENTATION THAT THE ABOVE LOAD TEST AND NDT REQUIREMENTS WERE SATISFACTORILY PERFORMED.

- A) ENSURE DOCUMENTATION CLEARLY SPECIFIES PERFORMANCE OF “PRE” AND “POST” LOAD MT AND VISUAL INSPECTIONS, METHODS USED, ACCEPTANCE CRITERIA USED, AND ITEMS (PIECES AND WELDS) THAT WERE INSPECTED AND TESTED.
- B) DOCUMENTATION SHALL CLEARLY IDENTIFY THE LOCATION OF EACH LIFT POINT.
- C) USING A CALIBRATED LOAD CELL, RECORD THE LOAD CELL VALUES FOR EACH LOAD TEST.

VII. PAINT OR LASER CUT THE INFORMATION SHOWN IN 2/S12 USING ½” (MINIMUM) LETTERING ONTO A LABEL PLATE. LABEL PLATE SHALL BE 16 GA. MIN THICKNESS STAINLESS STEEL. ATTACH LABEL PLATE IN A VISIBLE LOCATION NEAR EACH OF THE FOUR LIFT POINTS USING 3M DOUBLE BACK TRIM TAPE OR EQUAL.

PUGET SOUND NAVAL SHIPYARD
CODE 2370
ENGINEERING DIVISION

NO DEVIATIONS SHALL BE MADE
WITHOUT CODE 2370 APPROVAL

DRAWING NO. **2370-1830**

TITLE **RAE BRIDGE (DD1)**

SCALE N/A | **Sheet 12of 20** | REV. **ORIG**

SHEET 12 | REV. ORIG | TITLE RAE BRIDGE (DD1) | DWG. NO. 2370-1830

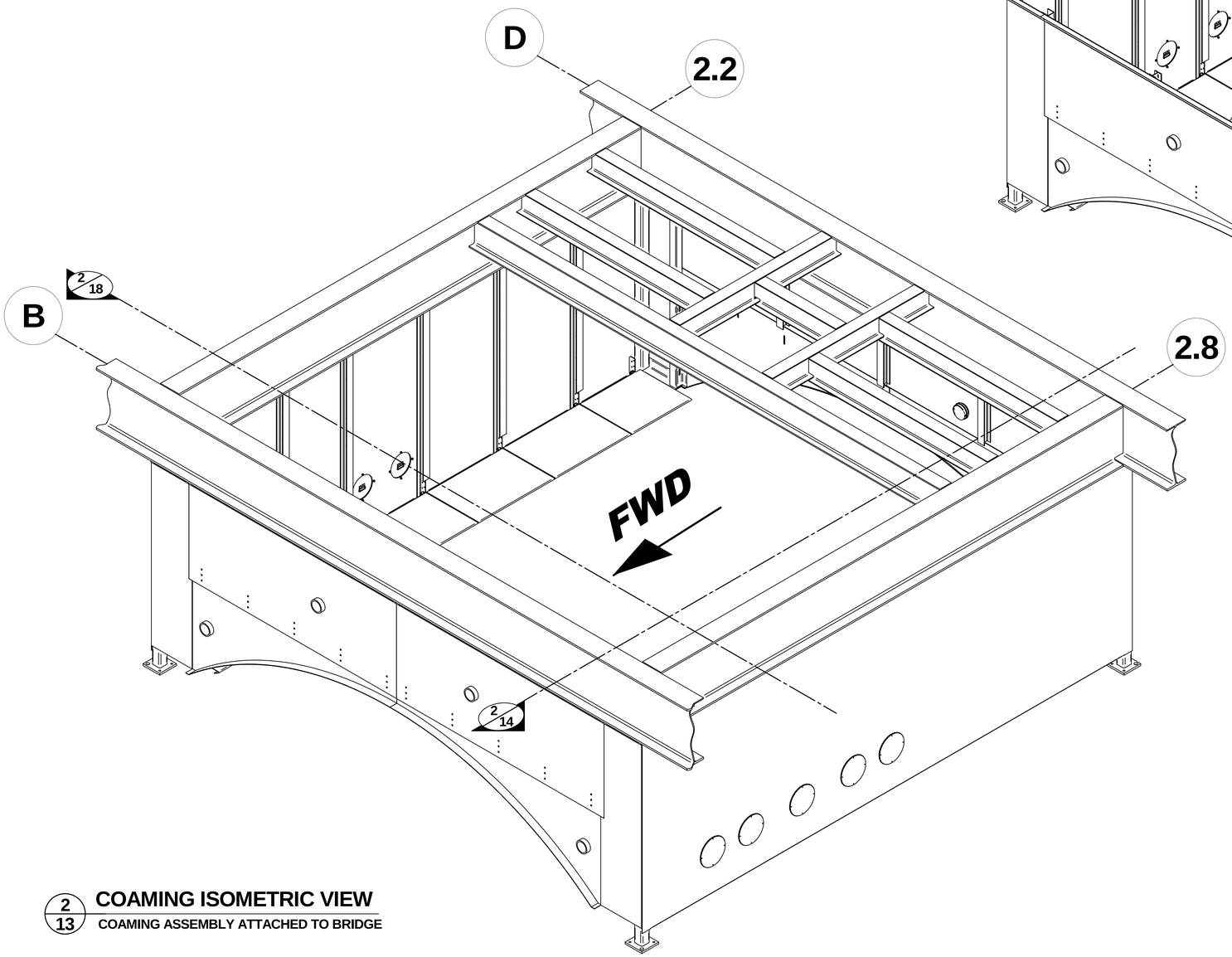

2 / 13 **COAMING ISOMETRIC VIEW**
COAMING ASSEMBLY ATTACHED TO BRIDGE

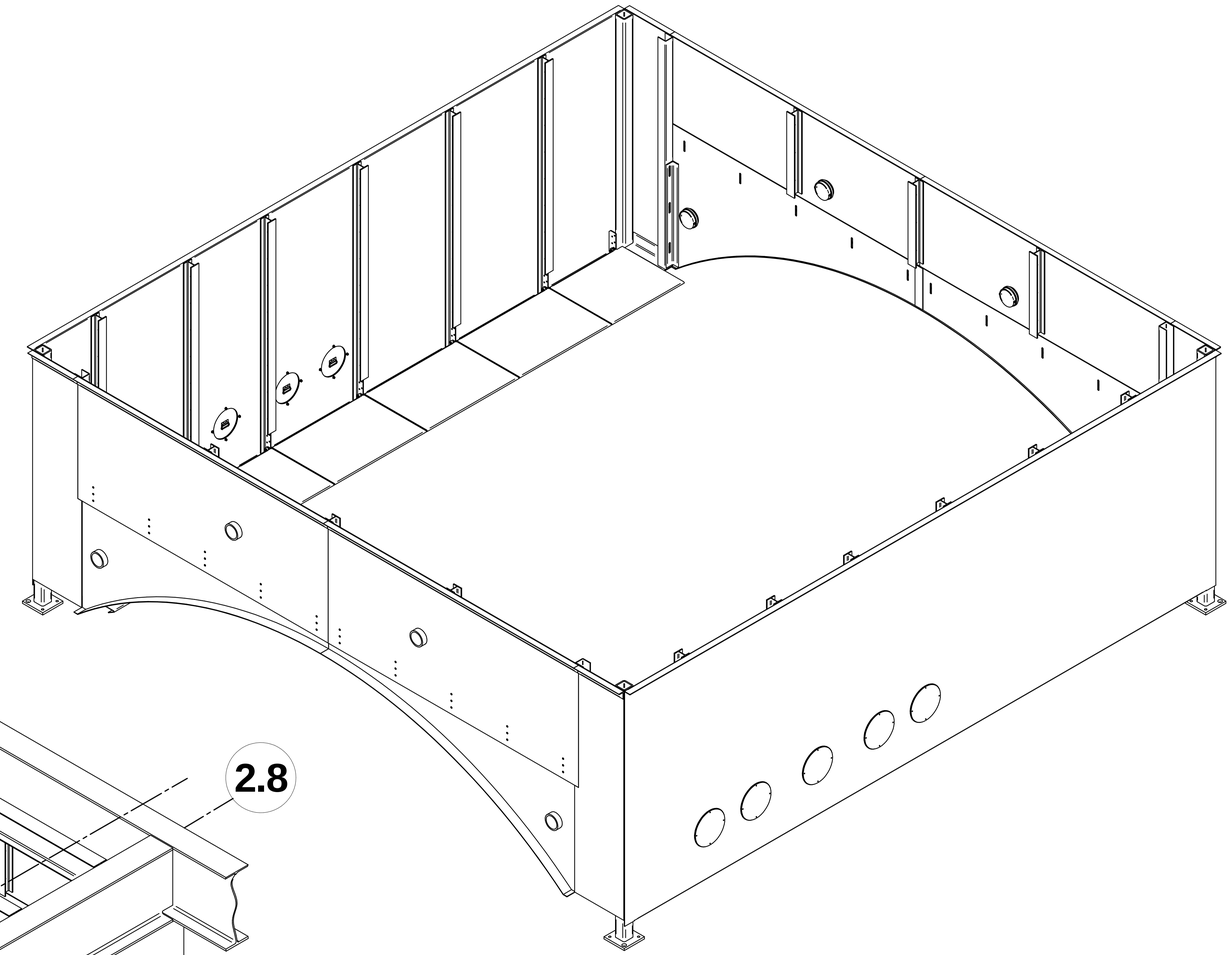

1 / 13 **COAMING ISOMETRIC VIEW**
COAMING ASSEMBLY ONLY

PUGET SOUND NAVAL SHIPYARD
CODE 2370
ENGINEERING DIVISION

NO DEVIATIONS SHALL BE MADE
WITHOUT CODE 2370 APPROVAL

DRAWING NO. **2370-1830**

TITLE **RAE BRIDGE (DD1)**

SCALE N/A | **Sheet 13 of 20** | REV. **ORIG**

SHEET 13 | REV. ORIG | TITLE RAE BRIDGE (DD1) | DWG. NO. 2370-1830

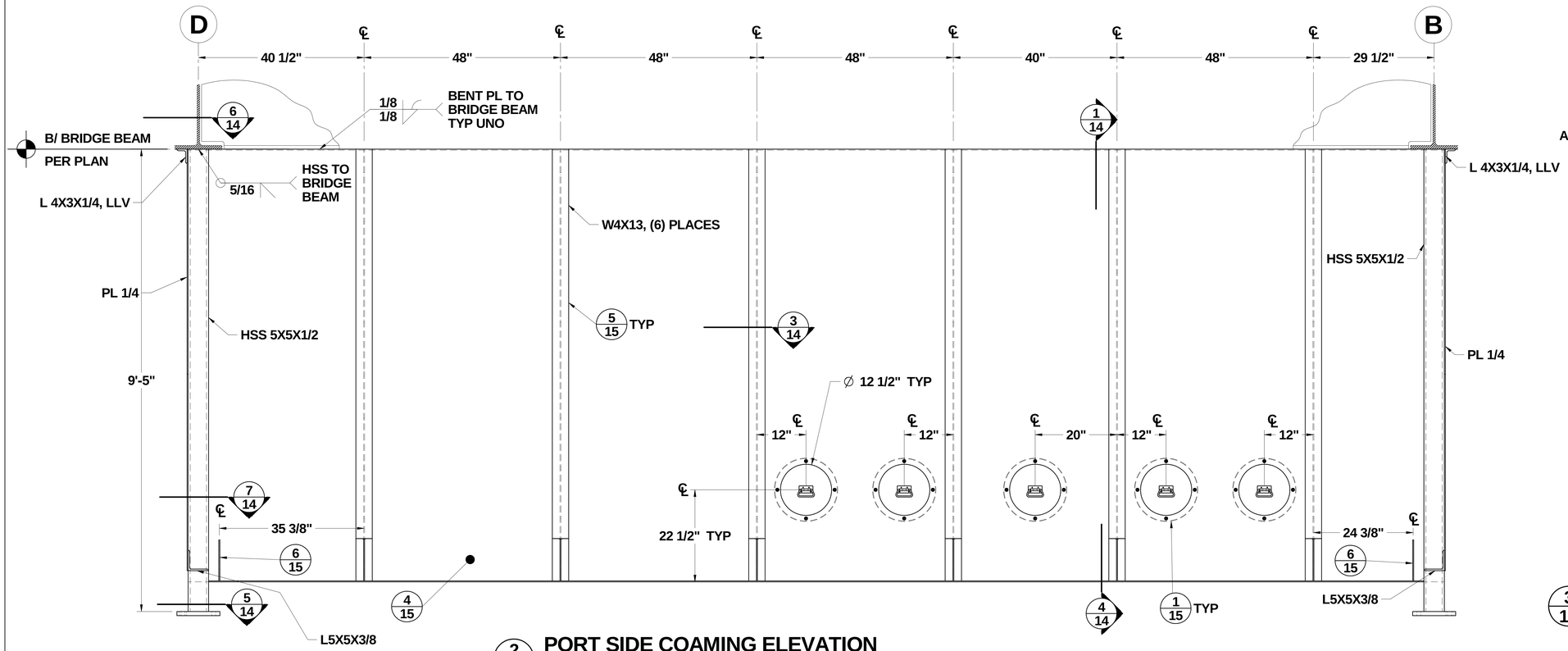

2/14 PORT SIDE COAMING ELEVATION

NOTE: STARBOARD SIDE COAMING OPPOSITE. PLATFORM PANELS NOT SHOWN FOR CLARITY.
PLATFORM PANELS SHOWN ON 5/S16.

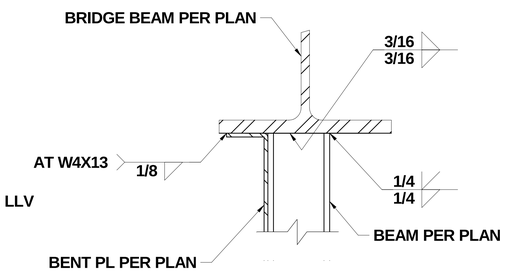

1/14 WF TO BEAM CONNECTION

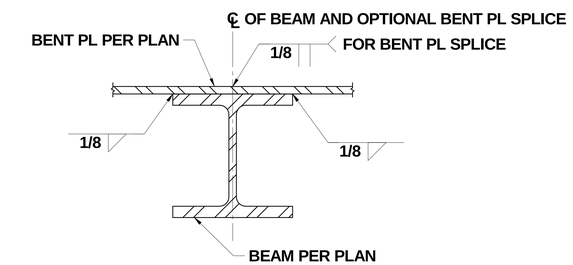

3/14 BENT PLATE TO WF STIFFENER CONNECTION

NOTE: OPTIONAL BENT PL SPLICE SHOWN IF FULL LENGTH BENT PLATE
CANNOT BE FABRICATED.

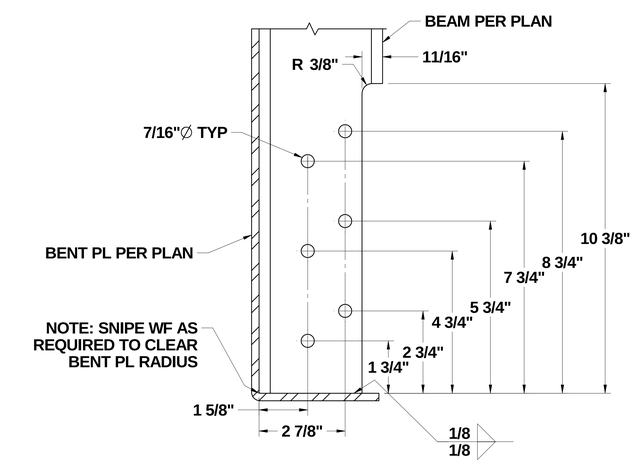

4/14 BENT PL TO WF CONNECTION

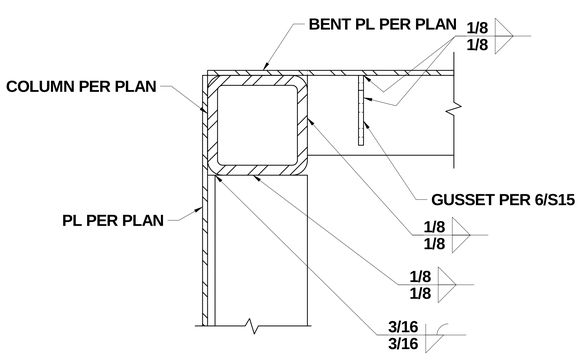

7/14 LOWER COLUMN CONNECTION DETAIL

NOTE: PLATE TO HSS CONNECTION PER 4/S15.

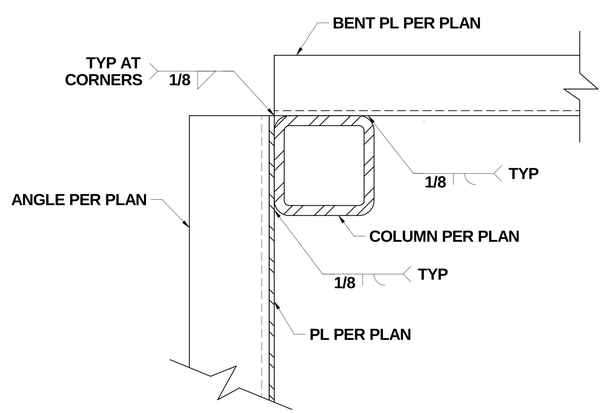

6/14 COLUMN TOP CONNECTION DETAIL

NOTE: BRIDGE STRUCTURE NOT SHOWN FOR CLARITY.

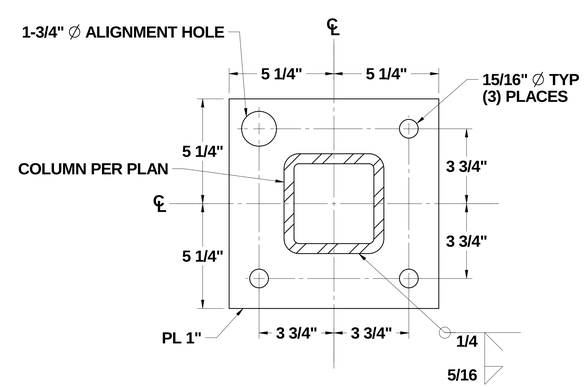

5/14 BASEPLATE DETAIL

NOTE: LOCATE ALIGNMENT HOLE FOR EACH
PLATE ON THE OUTBOARD CORNERS.

PUGET SOUND NAVAL SHIPYARD
CODE 2370
ENGINEERING DIVISION

NO DEVIATIONS SHALL BE MADE
WITHOUT CODE 2370 APPROVAL

DRAWING NO. 2370-1830

TITLE RAE BRIDGE (DD1)

SCALE N/A | Sheet 14 of 20 | REV. ORIG

SHEET 14 | REV. ORIG | TITLE RAE BRIDGE (DD1) | DWG. NO. 2370-1830

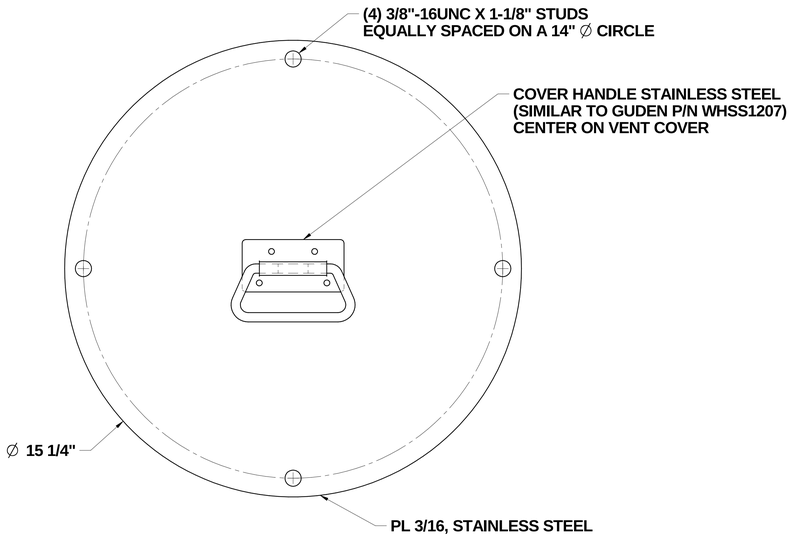

3/15 VENT COVER ASSEMBLY

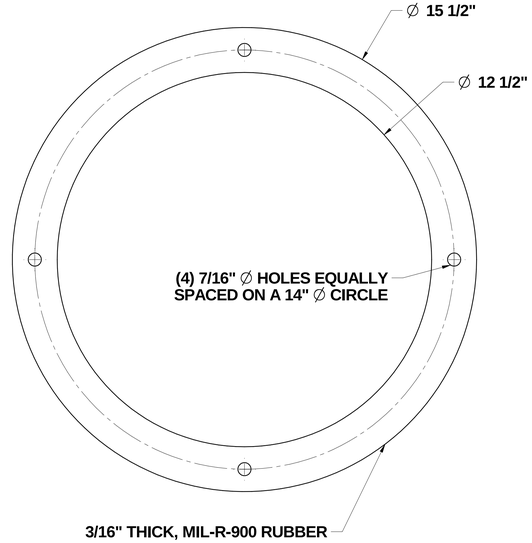

2/15 VENT COVER GASKET DETAIL

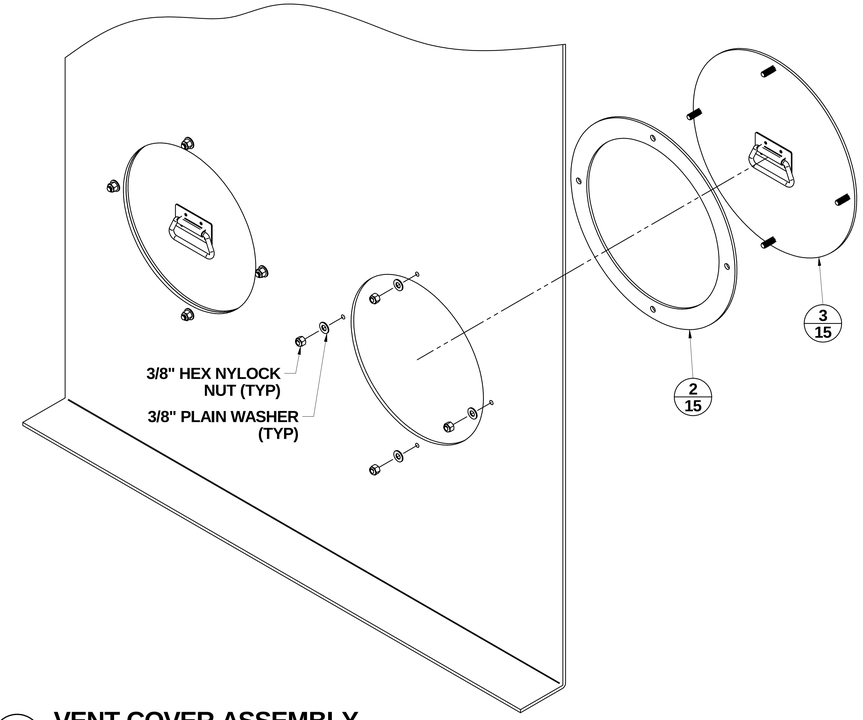

1/15 VENT COVER ASSEMBLY

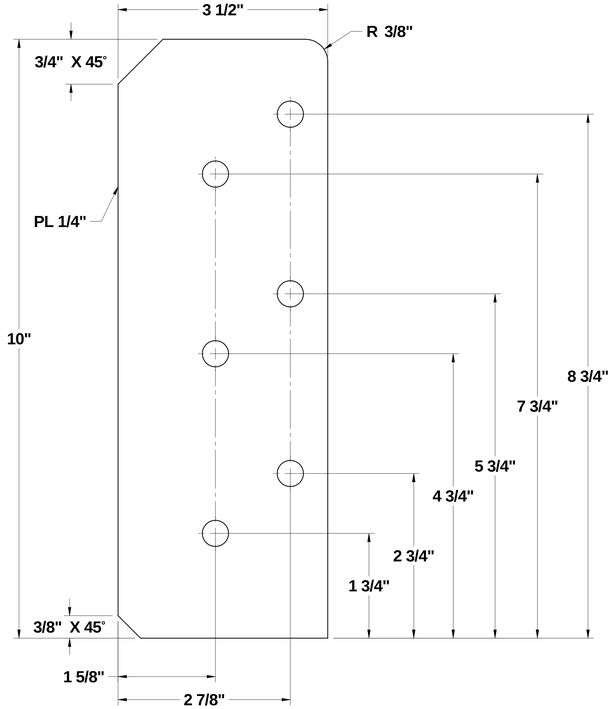

6/15 HINGE GUSSET PLATE

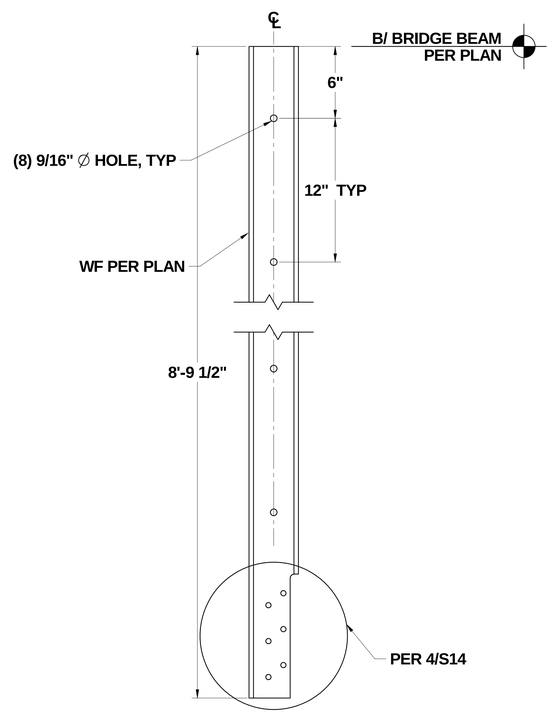

5/15 WF STIFFENER DETAIL

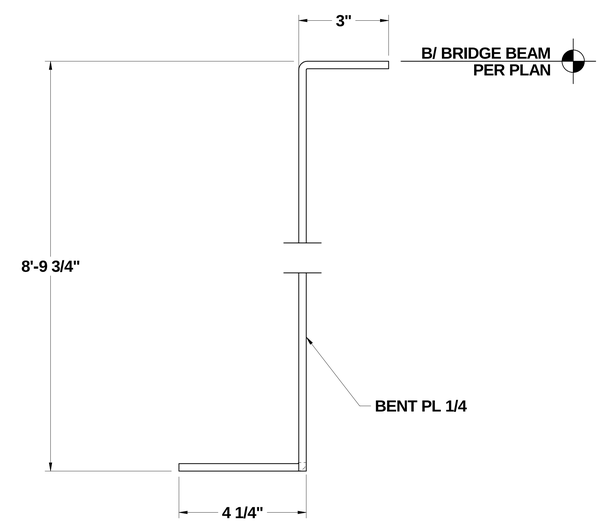

4/15 WALL BENT PLATE DETAIL

PUGET SOUND NAVAL SHIPYARD
CODE 2370
ENGINEERING DIVISION

NO DEVIATIONS SHALL BE MADE
WITHOUT CODE 2370 APPROVAL

DRAWING NO. 2370-1830

TITLE RAE BRIDGE (DD1)

SCALE N/A | Sheet 15 of 20 | REV. ORIG

SHEET 15 | REV. ORIG | TITLE RAE BRIDGE (DD1) | DWG. NO. 2370-1830

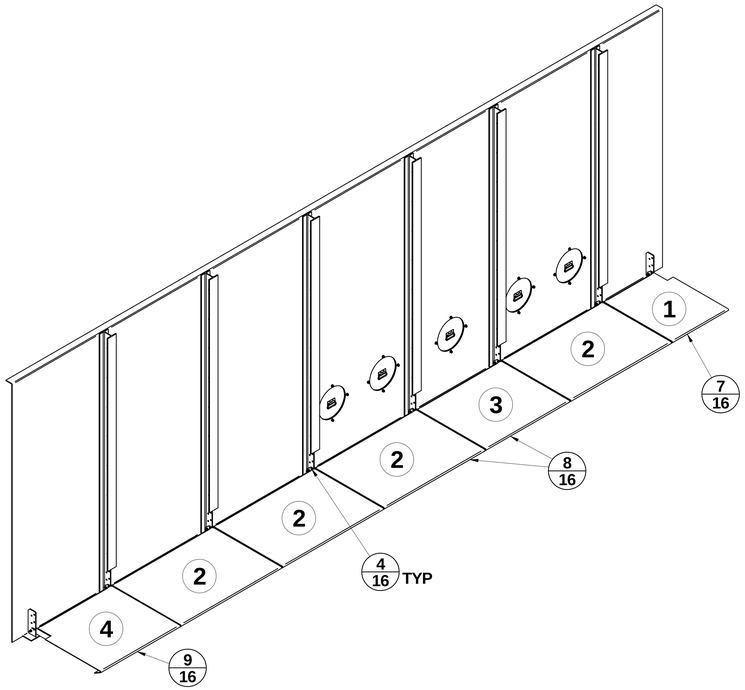

5/16 PORT SIDE PLATFORM PANELS

STARBOARD SIDE PANELS AND PLATFORM MIRROR THE PORT SIDE

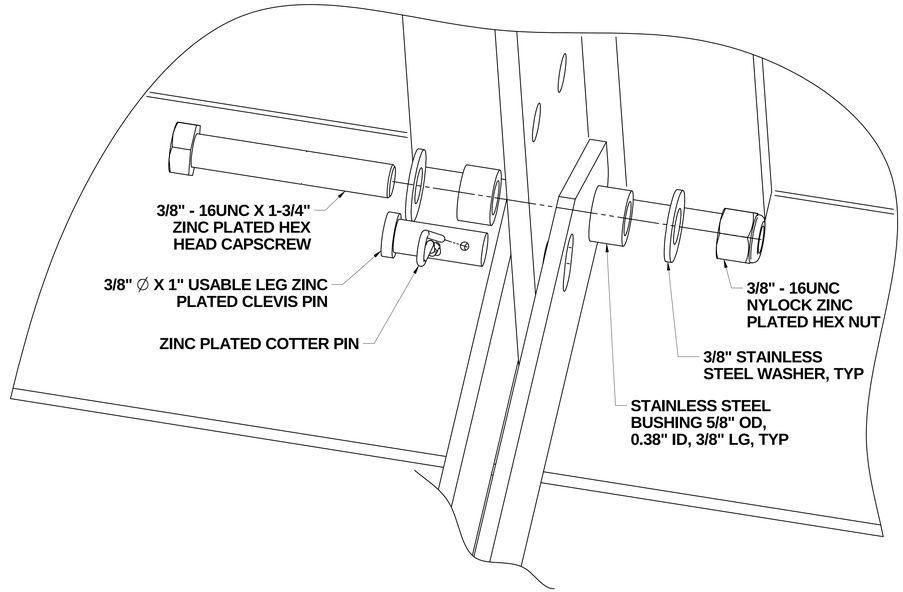

4/16 PLATFORM HINGE ASSEMBLY

CONNECTION TO GUSSET PLATE SIMILAR

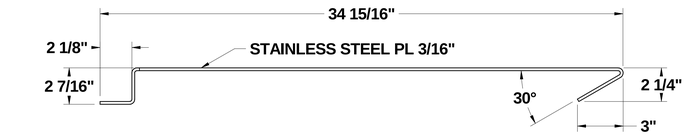

1/16 PLATFORM PANEL SIDE VIEW

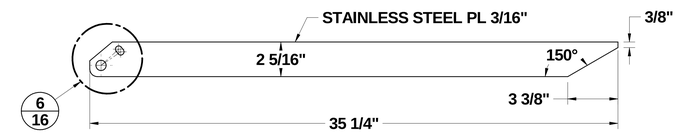

2/16 PANEL EDGE STIFFENER

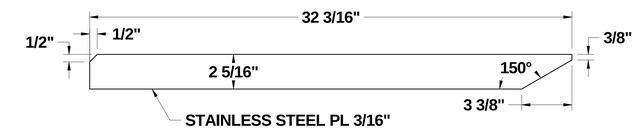

3/16 PANEL MIDDLE STIFFENER

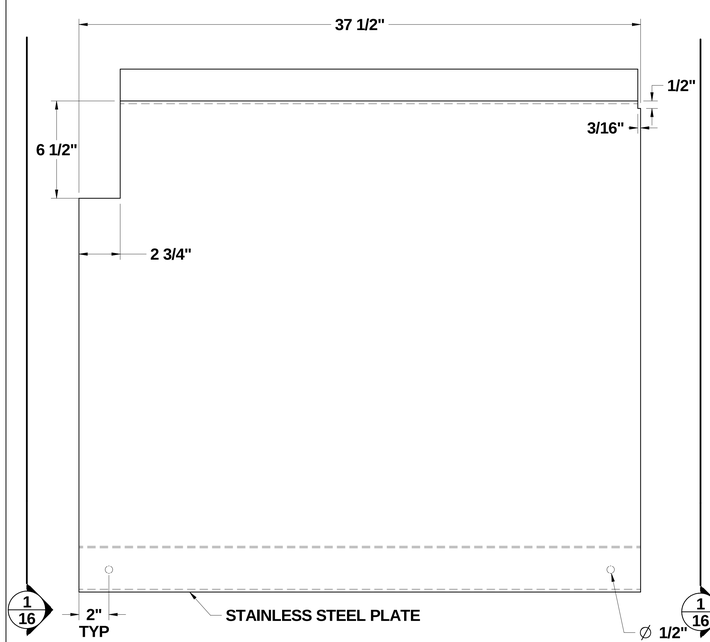

9/16 PLATFORM PANEL 4 DIMENSIONS

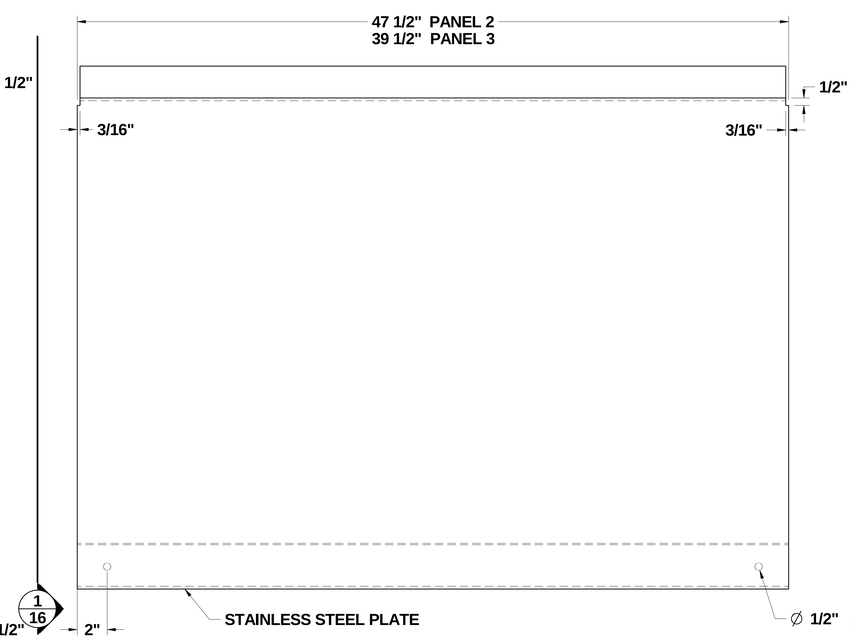

8/16 PLATFORM PANEL 2 & 3 DIMENSIONS

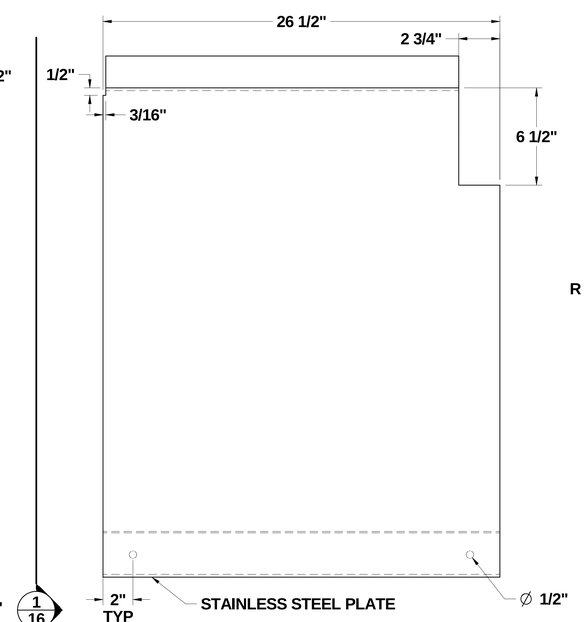

7/16 PLATFORM PANEL 1 DIMENSIONS

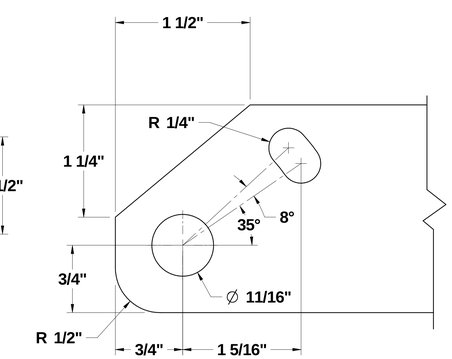

6/16 ENLARGED DETAIL

PUGET SOUND NAVAL SHIPYARD
CODE 2370
ENGINEERING DIVISION

NO DEVIATIONS SHALL BE MADE
WITHOUT CODE 2370 APPROVAL

DRAWING NO. 2370-1830

TITLE RAE BRIDGE (DD1)

SCALE N/A | Sheet 16 of 20 | REV. ORIG

SHEET 16 | REV. ORIG | TITLE RAE BRIDGE (DD1) | DWG. NO. 2370-1830

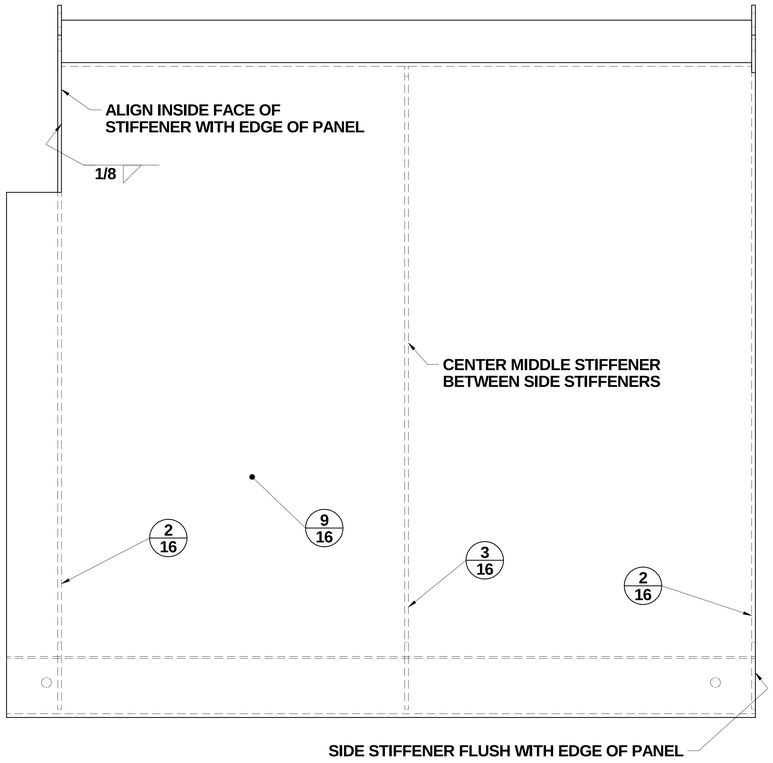

3/17 PANEL 4 STIFFENER LAYOUT

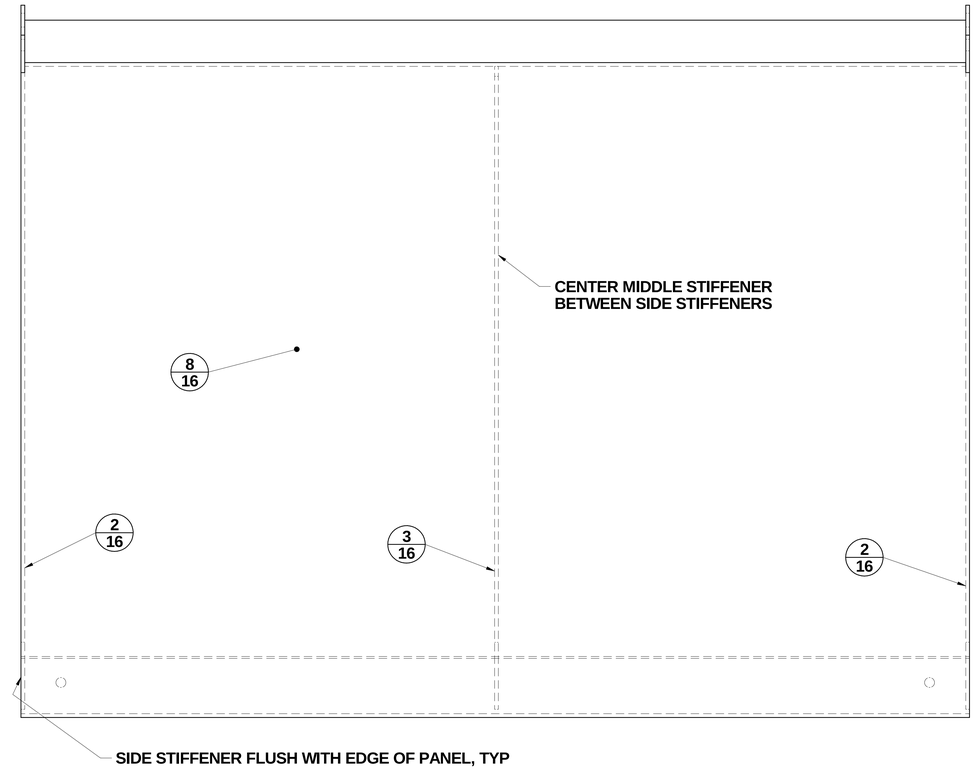

2/17 PANEL 2 & 3 STIFFENER LAYOUT

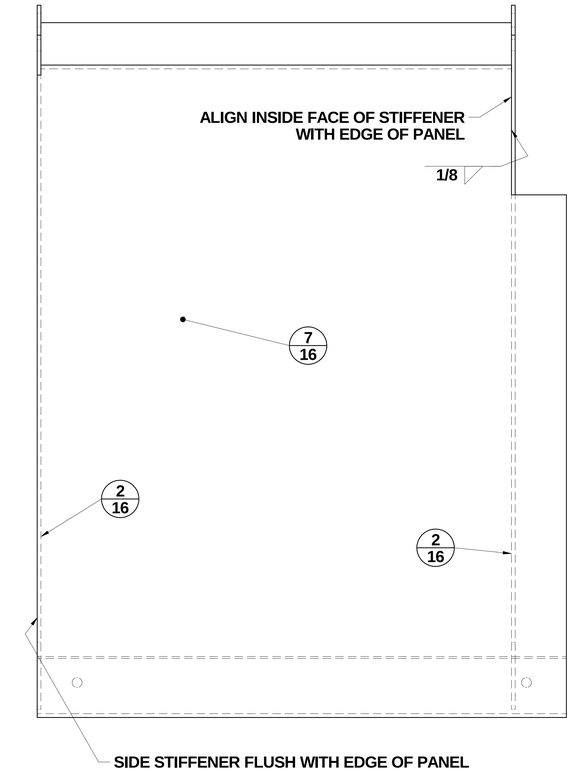

1/17 PANEL 1 STIFFENER LAYOUT

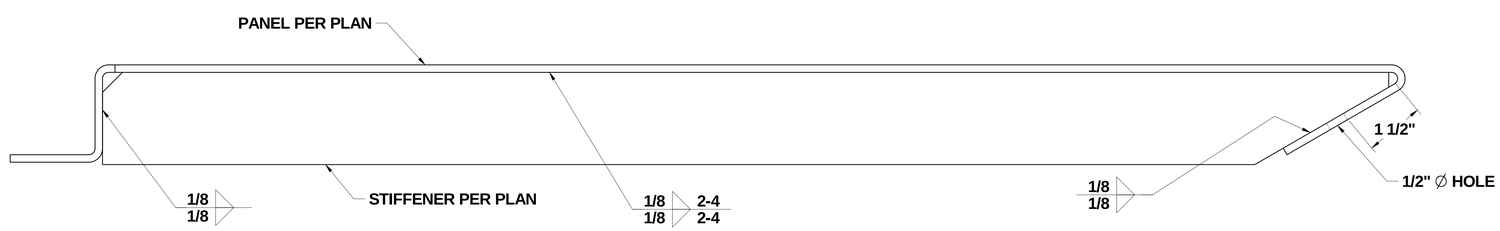

4/17 MIDDLE STIFFENER PANEL CONNECTION

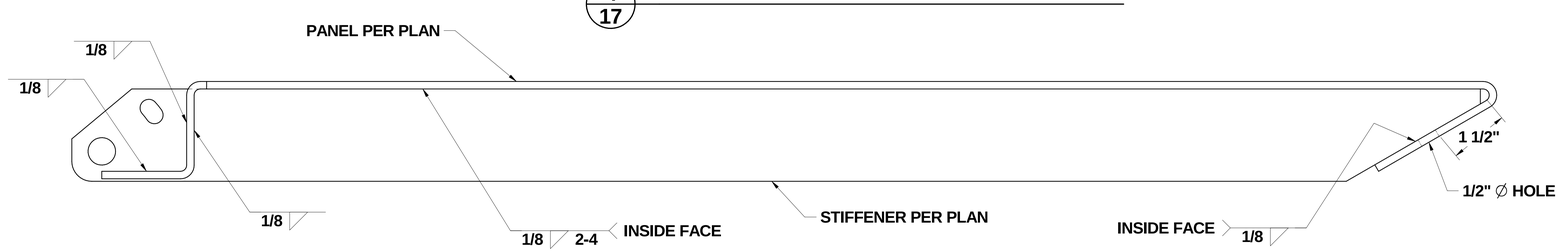

5/17 SIDE PANEL STIFFENER CONNECTION

PUGET SOUND NAVAL SHIPYARD
CODE 2370
ENGINEERING DIVISION

NO DEVIATIONS SHALL BE MADE
WITHOUT CODE 2370 APPROVAL

DRAWING NO. 2370-1830

TITLE RAE BRIDGE (DD1)

SCALE N/A | Sheet 17 of 20 | REV. ORIG

SHEET 17 | REV. ORIG | TITLE RAE BRIDGE (DD1) | DWG. NO. 2370-1830

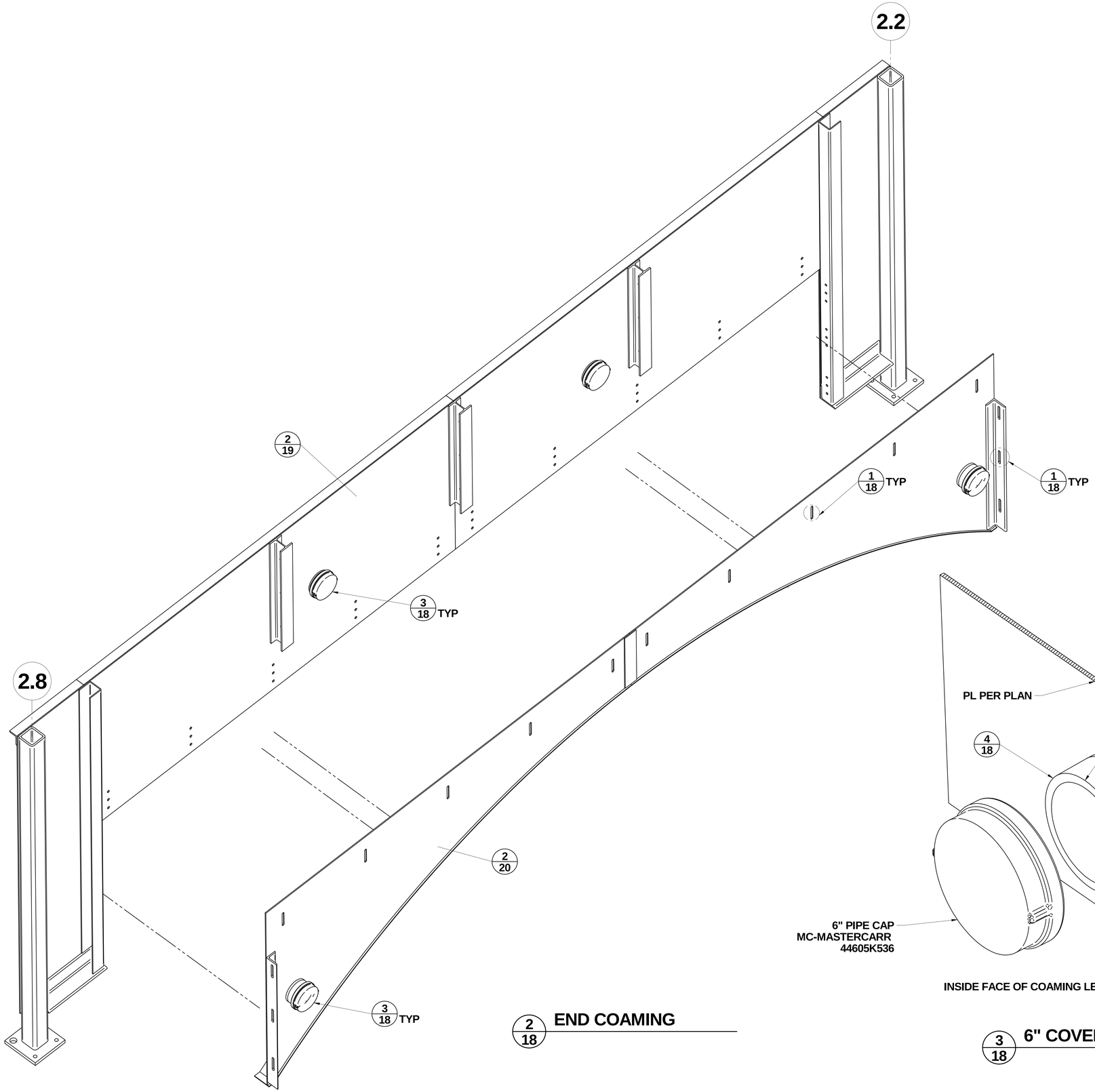

2/18 END COAMING

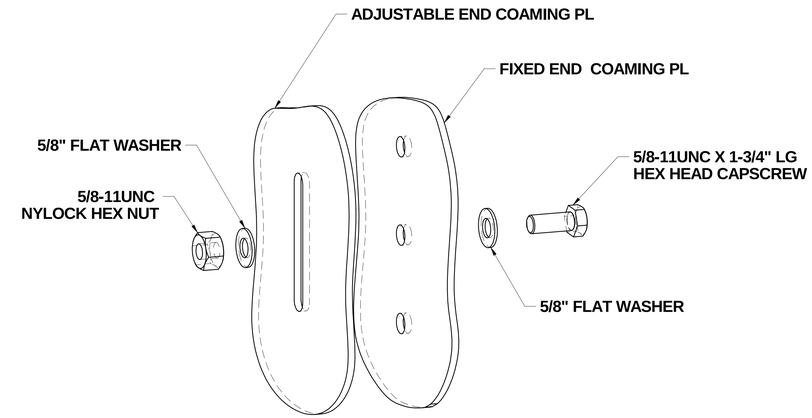

1/18 CONNECTION DETAIL

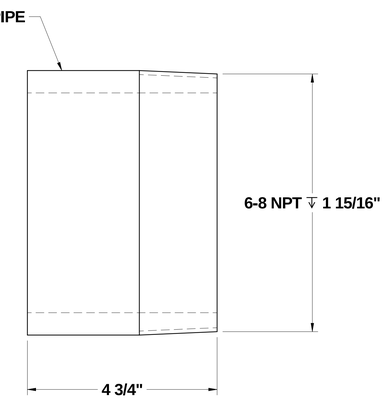

4/18 6" PIPE

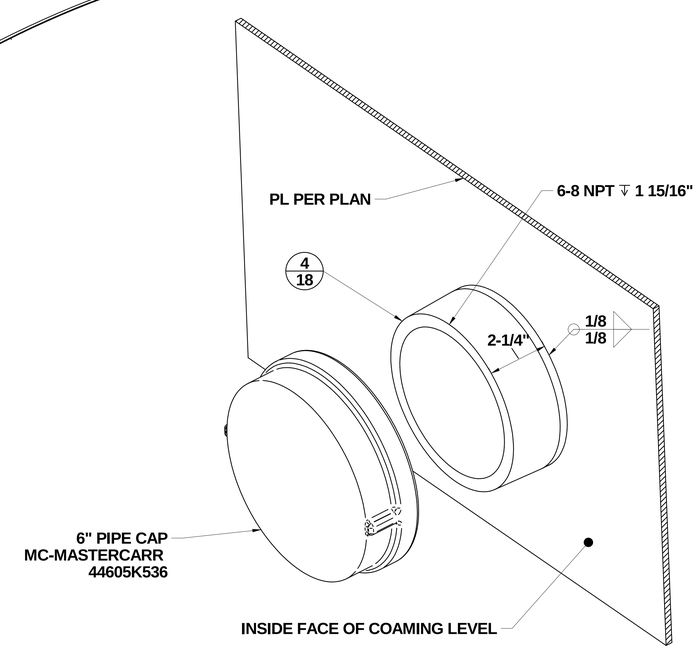

3/18 6" COVER ASSEMBLY

PUGET SOUND NAVAL SHIPYARD
CODE 2370
ENGINEERING DIVISION

NO DEVIATIONS SHALL BE MADE
WITHOUT CODE 2370 APPROVAL

DRAWING NO. 2370-1830

TITLE **RAE BRIDGE (DD1)**

SCALE N/A | **Sheet 18 of 20** | REV. **ORIG**

SHEET 18 | REV. ORIG | TITLE RAE BRIDGE (DD1) | DWG. NO. 2370-1830

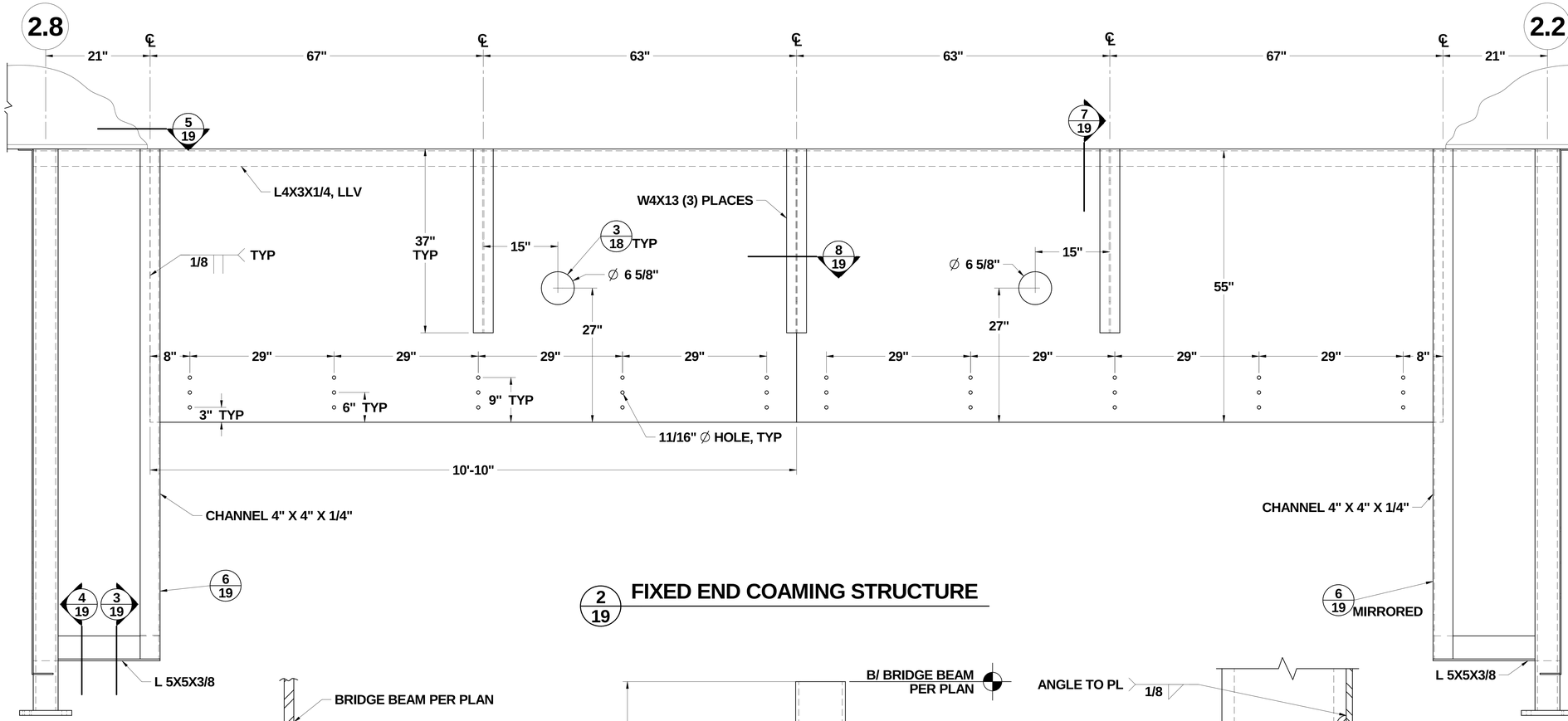

2/19 FIXED END COAMING STRUCTURE

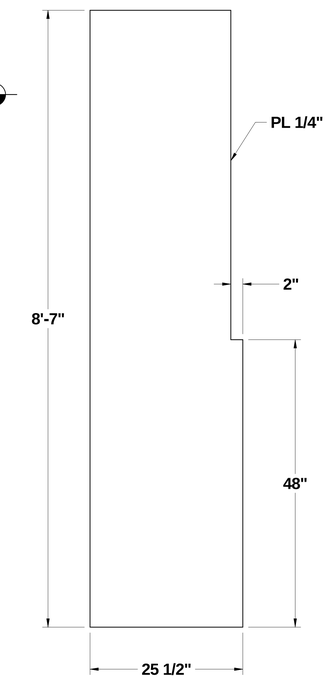

1/19 LEFT-HAND PANEL END COAMING

RIGHT-HAND PANEL END COAMING OPPOSITE

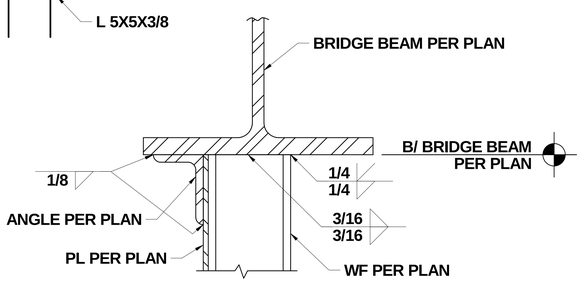

7/19 WF TO BRIDGE BEAM CONNECTION

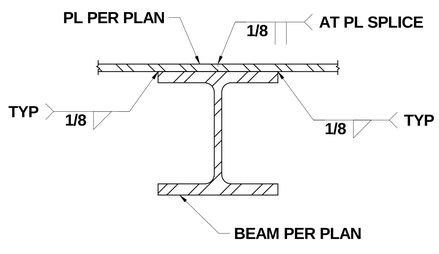

8/19 WF STIFFENER DETAIL

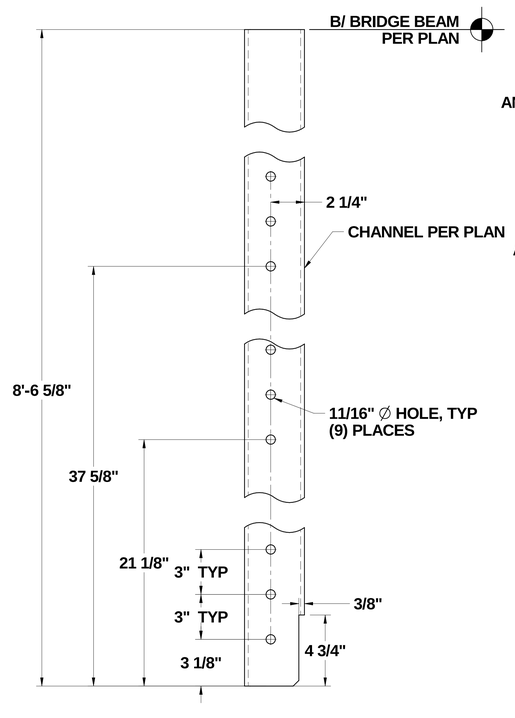

6/19 CHANNEL STIFFENER DETAIL

LEFT SHOWN, RIGHT MIRRORED

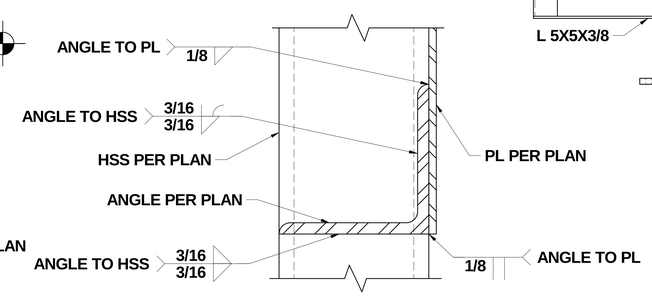

4/19 ANGLE TO HSS DETAIL

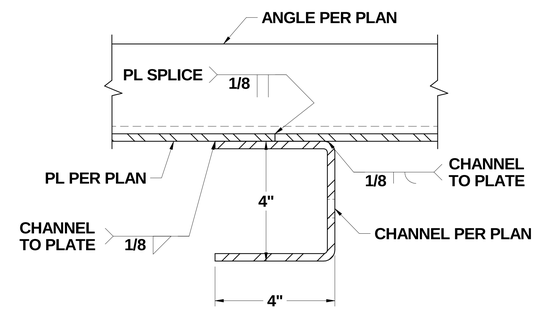

5/19 CHANNEL TO PLATE DETAIL

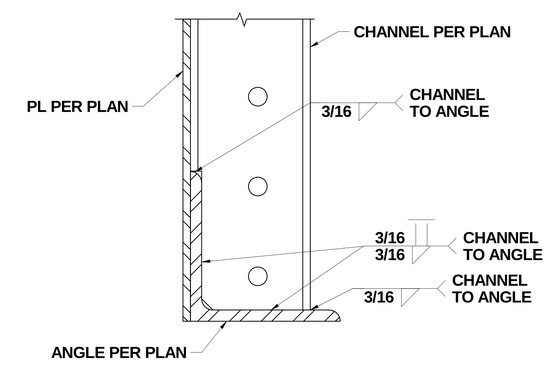

3/19 CHANNEL TO ANGLE DETAIL

PUGET SOUND NAVAL SHIPYARD
CODE 2370
ENGINEERING DIVISION

NO DEVIATIONS SHALL BE MADE
WITHOUT CODE 2370 APPROVAL

DRAWING NO. 2370-1830

TITLE RAE BRIDGE (DD1)

SCALE N/A | Sheet 19 of 20 | REV. ORIG

DWG. NO. 2370-1830 | TITLE RAE BRIDGE (DD1) | REV. ORIG | SHEET 19

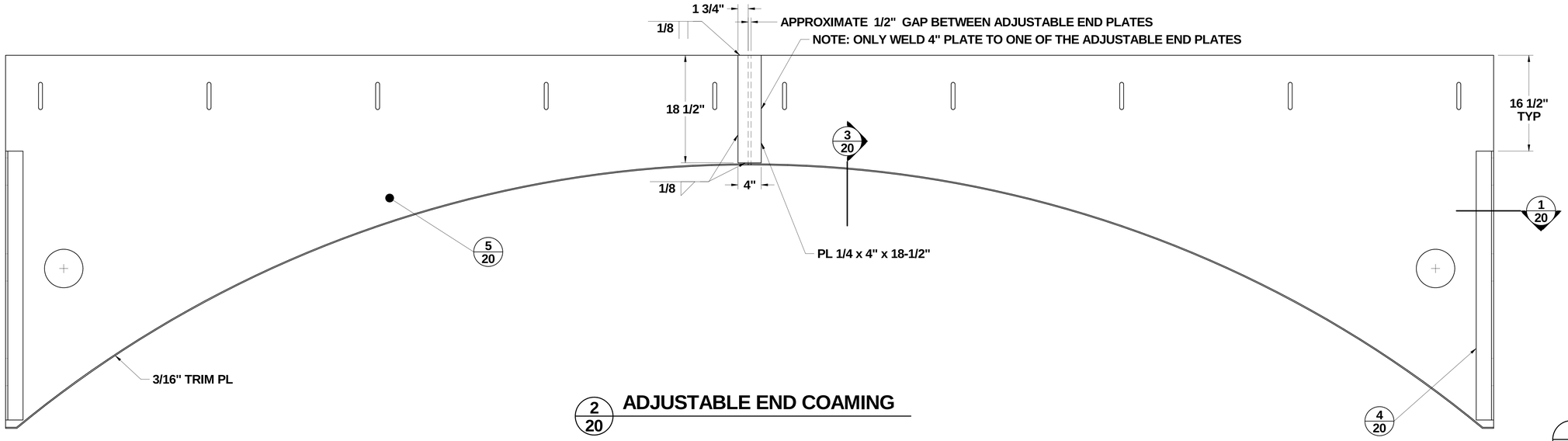

2/20 ADJUSTABLE END COAMING

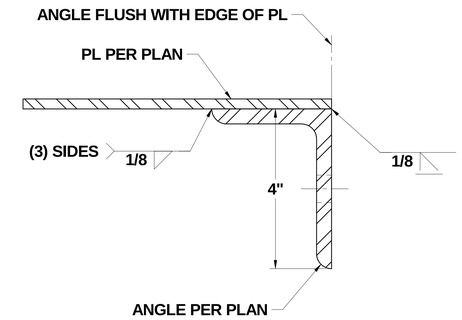

1/20 ANGLE TO PLATE CONNECTION

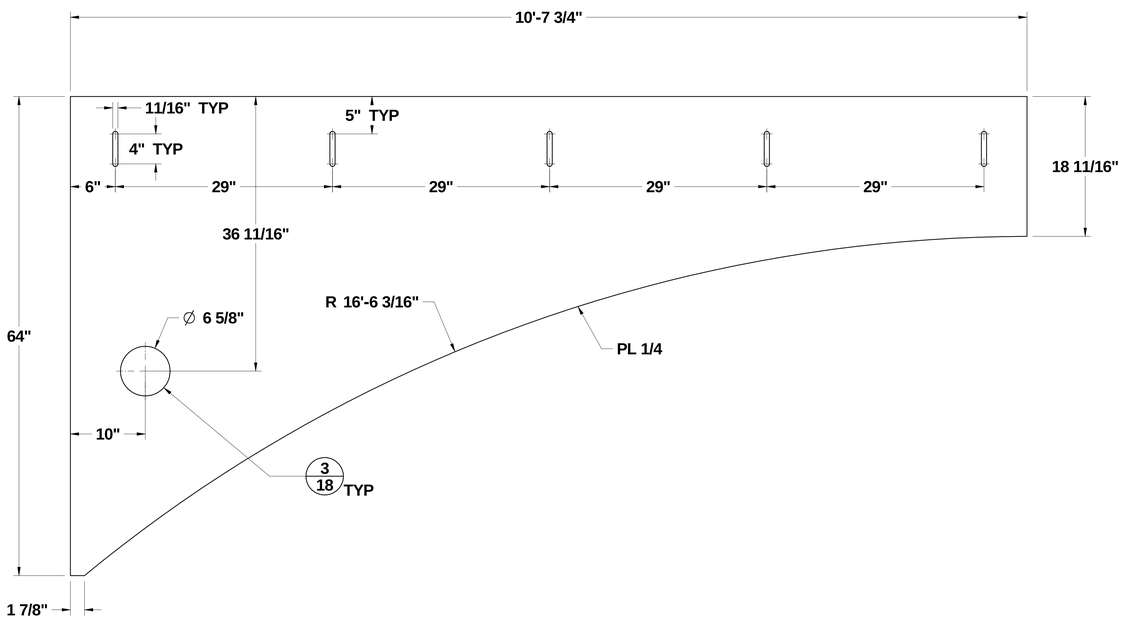

5/20 ADJUSTABLE END PLATE

LEFT PLATE SHOWN, RIGHT PLATE MIRRORED

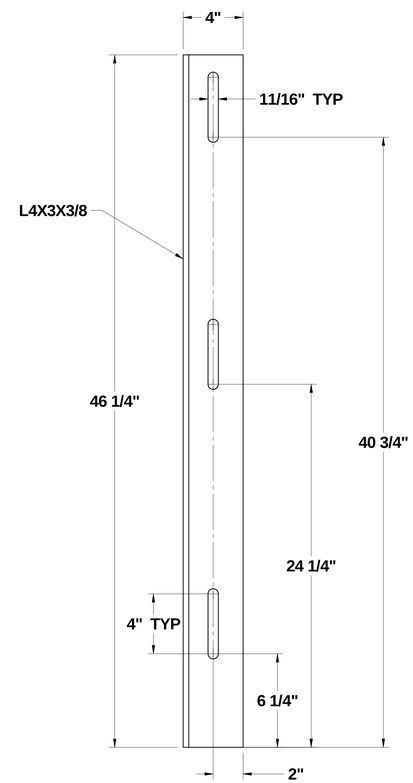

4/20 ADJUSTABLE MATING ANGLE

RIGHT ANGLE SHOWN, LEFT ANGLE MIRRORED

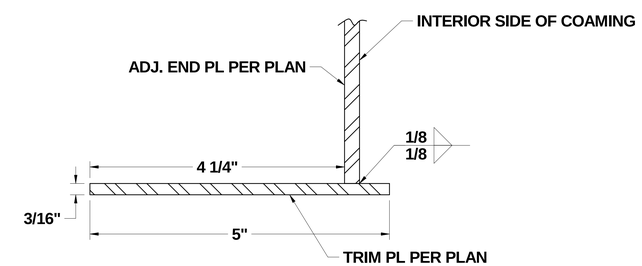

3/20 PLATE TO END PLATE DETAIL

PUGET SOUND NAVAL SHIPYARD
CODE 2370
ENGINEERING DIVISION

NO DEVIATIONS SHALL BE MADE
WITHOUT CODE 2370 APPROVAL

DRAWING NO. 2370-1830

TITLE **RAE BRIDGE (DD1)**

SCALE N/A | Sheet 20 of 20 | REV. ORIG

TITLE RAE BRIDGE (DD1)
DWG. NO. 2370-1830
REV. ORIG
SHEET 20

GENERAL NOTES

1. DRAWING PSNS 2370-1835 PROVIDES GENERAL NOTES AND SPECIFICATIONS TO BE USED WITH THIS DRAWING.

STRUCTURAL STEEL LEGEND (PLAN VIEWS)

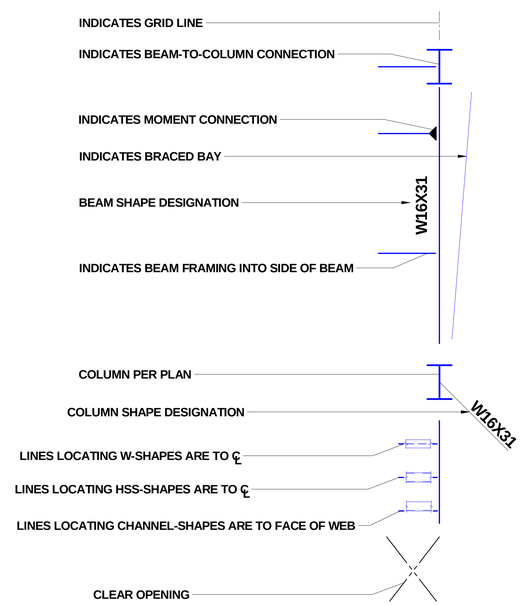

SYMBOL LEGEND

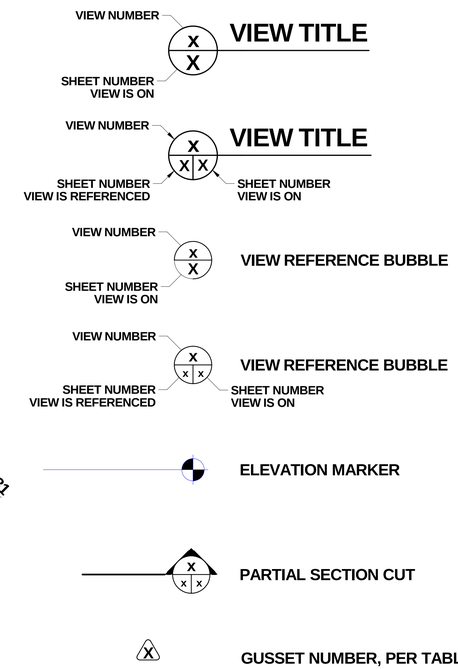

REVISIONS

SYMB	REV	DESCRIPTION	DATE	CHANGE BY	APPROVAL
A	A				
B	B				
C	C				
D	D				

ABBREVIATIONS

ADJ	- ADJUSTABLE	MFR	- MANUFACTURER
B/	- BOTTOM OF	MIN	- MINIMUM
BP	- BASE PLATE	O.C.	- ON CENTER
BRB	- BUCKLING RESTRAINED BRACE	PL	- PLATE
CJP	- COMPLETE JOINT PENETRATION	PLATF	- PLATFORM
CL OR ℄	- CENTERLINE	REQ'D	- REQUIRED
COL	- COLUMN	SC	- SLIP CRITICAL
DC	- DEMAND CRITICAL	SCH	- SCHEDULE
ELEV OR EL	- ELEVATION	SFRS	- SEISMIC FORCE RESISTING SYSTEM
GA.	- GAUGE	SSH	- SHORT-SLOT HOLE
HORIZ	- HORIZONTAL	SST	- STAINLESS STEEL
ISO	- ISOMETRIC	STL	- STEEL
LLV	- LONG LEG VERTICAL	T&B	- TOP AND BOTTOM
LSH	- LONG-SLOT HOLE	T/	- TOP OF
MAX	- MAXIMUM	TYP	- TYPICAL

DISTRIBUTION STATEMENT: N/A

A.D.C. REVIEW

	SIGNATURE	DATE
	J. BYRNES /S/	11/12/14

CONCURRENCE

CODE	SIGNATURE	DATE

/S/ SIGNATURE ON FILE APPROVAL

	SIGNATURE	DATE
BRANCH SUPV.	J. BYRNES /S/	11/12/14
CHECKED	K. BOTTELBERGHE /S/	11/12/14
DRAWN	B. MEACHAM /S/	11/12/14
DRAWN		
DESIGNED		
FILE PATH		

PUGET SOUND NAVAL SHIPYARD
CODE 2370
ENGINEERING DIVISION

NO DEVIATIONS SHALL BE MADE
WITHOUT CODE 2370 APPROVAL

DRAWING NO. **2370-1831**

TITLE **RAE BRIDGE (DD5)**

SCALE N/A | **Sheet 1 of 21** | REV. **ORIG**

SHEET 1 | REV. ORIG | TITLE RAE BRIDGE (DD5) | DWG. NO. 2370-1831

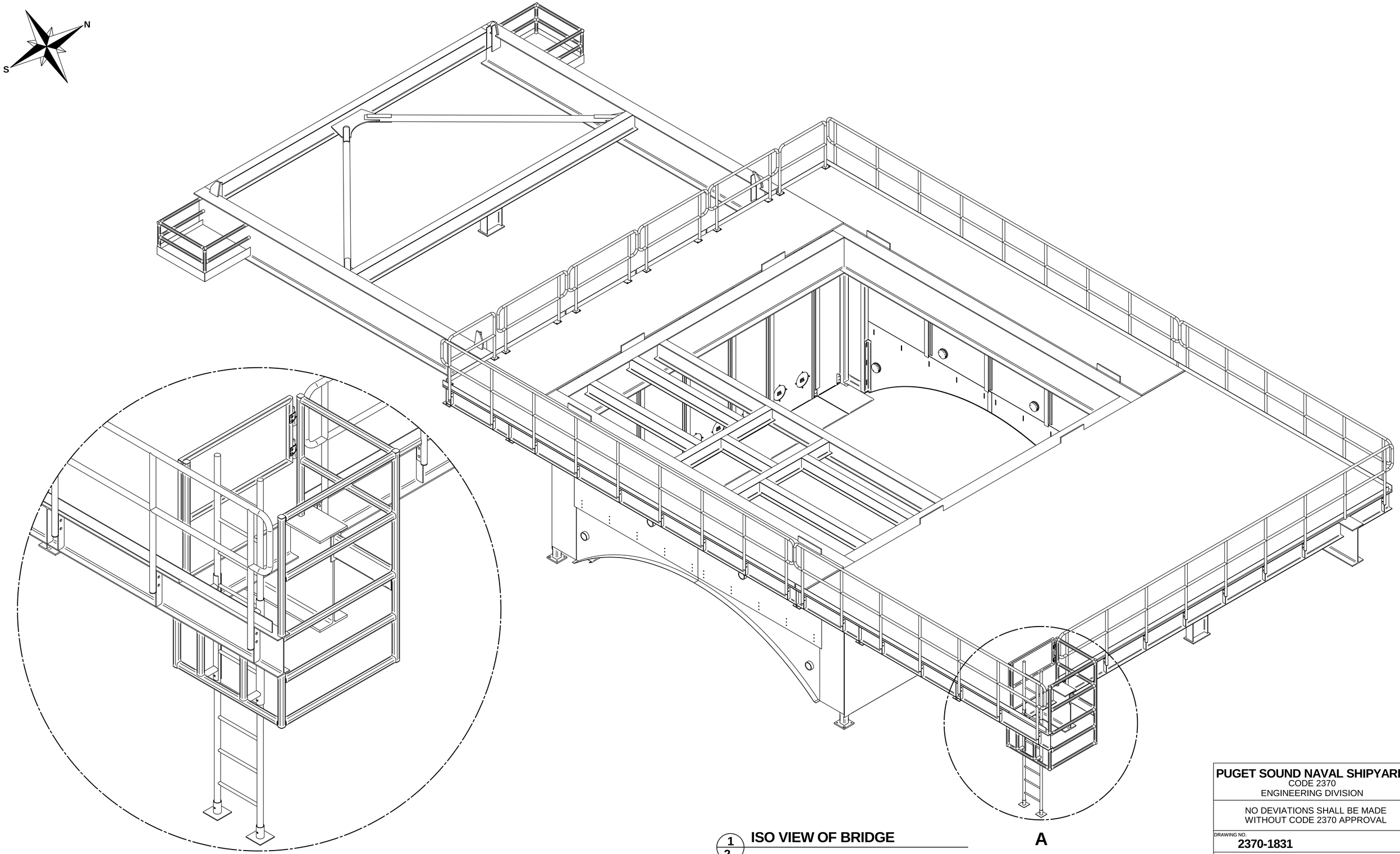

DETAIL A

1/2 ISO VIEW OF BRIDGE

PUGET SOUND NAVAL SHIPYARD
CODE 2370
ENGINEERING DIVISION

NO DEVIATIONS SHALL BE MADE
WITHOUT CODE 2370 APPROVAL

DRAWING NO. **2370-1831**

TITLE **RAE BRIDGE (DD5)**

SCALE N/A | **Sheet 2 of 21** | REV. **ORIG**

SHEET 2 | REV. ORIG | TITLE RAE BRIDGE (DD5) | DWG. NO. 2370-1831

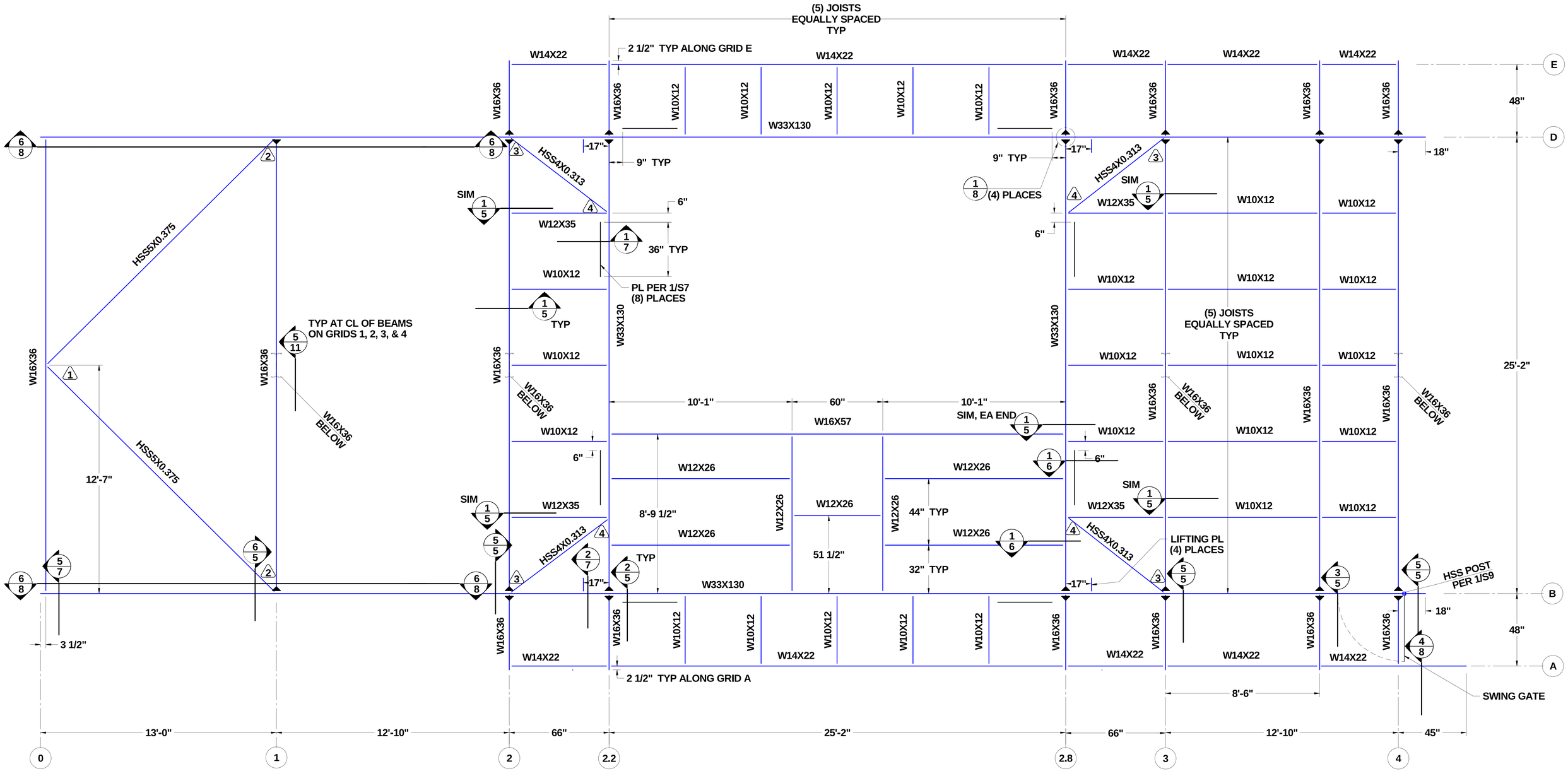

1/3 BRIDGE PLAN VIEW

T/STL EL = 0'-0"

NOTE: ALL CONNECTIONS ALONG GRID D ARE SIMILAR BUT OPPOSITE TO CONNECTIONS ALONG GRID B.

N

S

PUGET SOUND NAVAL SHIPYARD
CODE 2370
ENGINEERING DIVISION

NO DEVIATIONS SHALL BE MADE WITHOUT CODE 2370 APPROVAL

DRAWING NO. **2370-1831**

TITLE **RAE BRIDGE (DD5)**

SCALE N/A | **Sheet 3 of 21** | REV. **ORIG**

SHEET 3 | REV. ORIG | TITLE RAE BRIDGE (DD5) | DWG. NO. 2370-1831

REMOVABLE SECTION
OF GRATING AT LIFTING
LUGS PER 3/S7, (4) PLACES

H1
H2
H2
H2
H2
H1

3/8
3/12
3/8
3/11
1/11
2/11
1/9
2/9
3/9
5/12

PER 2/S12
PER 1/S12

GRATING FLUSH WITH OUTSIDE GIRDER
FLANGE ALONG GRIDS B, D, 2.2, & 2.8.

E
D
B
A

48"
25'-2"
48"

13'-0" | 12'-10" | 66" | 25'-2" | 66" | 12'-10"

0 | 1 | 2 | 2.2 | 2.8 | 3 | 4

GRATING ATTACHMENT
PER 6/S7, TYP

HANDRAIL
PER 4/S12

MCNICHOLS GW-125 BAR
GRATING OR EQUIVALENT

INDICATES GRATING SPAN IN E-W DIRECTION

INDICATES GRATING SPAN IN N-S DIRECTION

N
S

1/4 BRIDGE GRATING PLAN

PUGET SOUND NAVAL SHIPYARD
CODE 2370
ENGINEERING DIVISION

NO DEVIATIONS SHALL BE MADE
WITHOUT CODE 2370 APPROVAL

DRAWING NO. 2370-1831

TITLE RAE BRIDGE (DD5)

SCALE N/A | Sheet 4 of 21 | REV. ORIG

DWG. NO. 2370-1831 | TITLE RAE BRIDGE (DD5) | REV. ORIG | SHEET 4

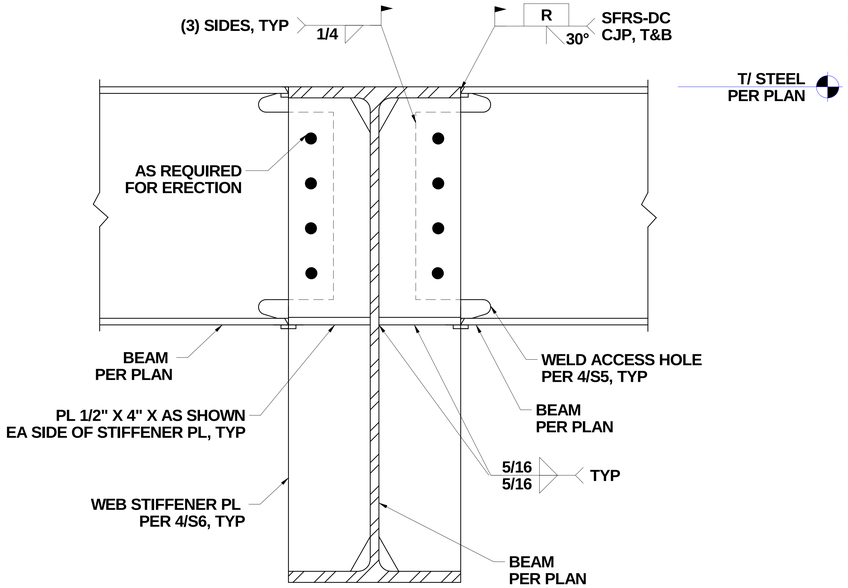

3/5 MOMENT CONNECTION

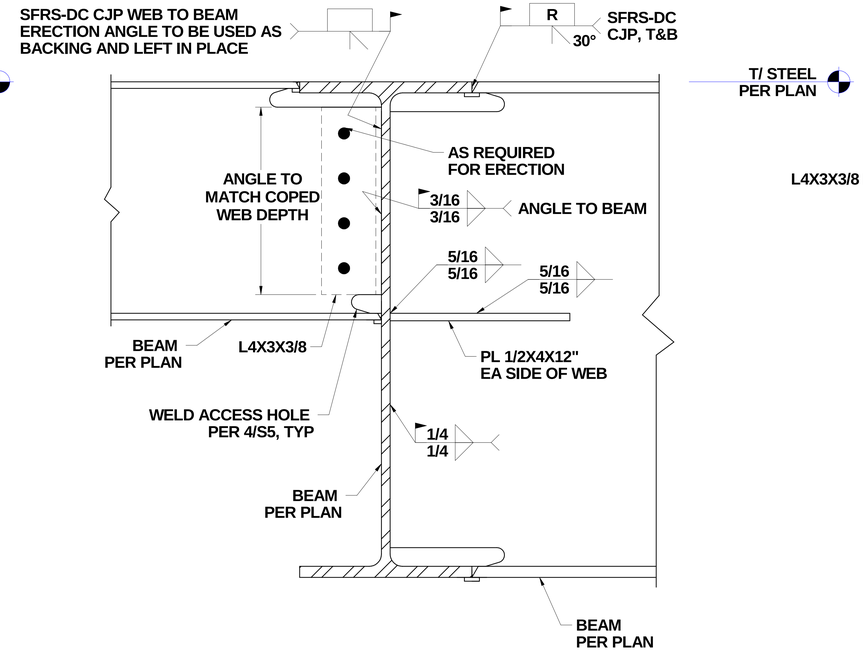

2/5 MOMENT CONNECTION AT VARYING BEAM DEPTHS

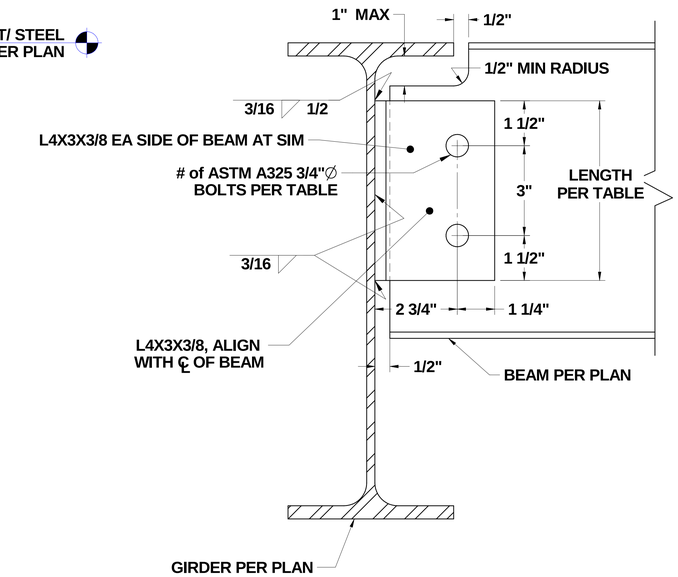

BEAM TYPE	ROWS OF BOLTS	LENGTH (IN)
W10	2	6
W12	3	9
W14	3	9
W16	4	12

1/5 TYP SHEAR CONNECTION

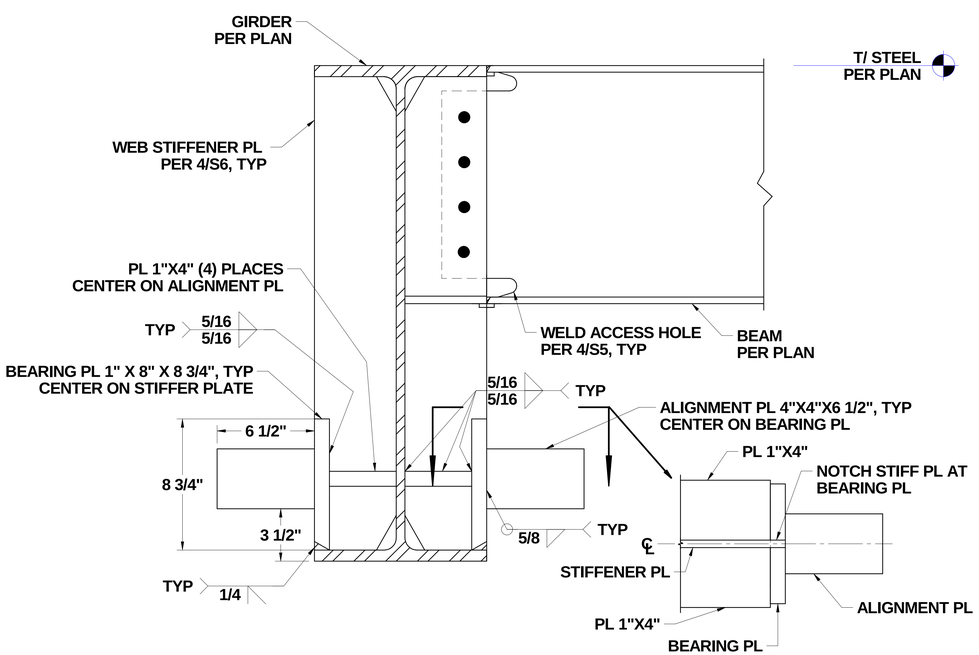

6/5 BEAM CONNECTION AT BRIDGE TO TOWER ATTACHMENT

NOTE: FOR INFORMATION NOT SHOWN, REFERENCE 3/S5.

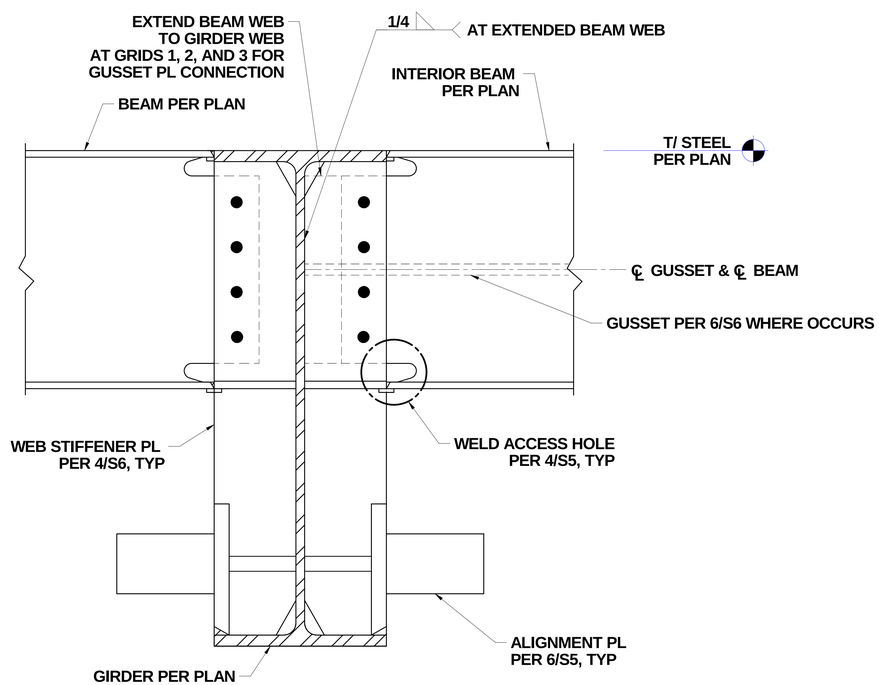

5/5 MOMENT CONNECTION AT BRIDGE TO TOWER ATTACHMENT

NOTE: FOR INFORMATION NOT SHOWN, REF 3/S5.

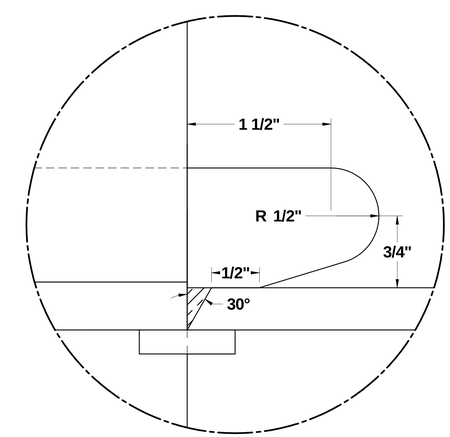

4/5 WELD ACCESS HOLE

NOTE: USE ACCESS HOLE TYPE B. DIMENSIONS IN ACCORDANCE WITH AWS D1.8 / D1.8M SUBCLAUSE 6.10.1.

PUGET SOUND NAVAL SHIPYARD
CODE 2370
ENGINEERING DIVISION

NO DEVIATIONS SHALL BE MADE
WITHOUT CODE 2370 APPROVAL

DRAWING NO. **2370-1831**

TITLE **RAE BRIDGE (DD5)**

SCALE N/A | **Sheet 5 of 21** | REV. **ORIG**

SHEET 5 | REV. ORIG | TITLE RAE BRIDGE (DD5) | DWG. NO. 2370-1831

Gusset Number			1	2	3	4
Brace Member Section			HSS5X0.375	HSS5X0.375	HSS4X0.313	HSS4X0.313
Reinforcement Thickness	t_{rein}	in	1/2	1/2	3/8	3/8
Reinforcement Weld		in	5/16	5/16	1/4	1/4
Reinforcement Length	L_{rein}	in	18	18	16	16
Beam Member Section			W16X36	W16X36	W12X35	W33X130
Girder Member Section			NA	W33X130	W33X130	W16X36
Thickness	t_{gusset}	in	3/4	3/4	3/4	3/4
Gusset-to-Girder Connection Length	A	in	10.710	11.296	10.633	10.633
Gusset-to-Beam Connection Length	B	in	15.837	10.892	13.913	13.913
Detailing Dimension 1	L_1	in	4.925	4.925	4.771	4.771
Detailing Dimension 2	L_2	in	14.798	12.551	11.645	11.645
Detailing Dimension 3	L_3	in	3.887	6.317	6.211	6.211
Detailing Dimension 4	L_4	in	4.974	4.974	3.638	3.638
Detailing Dimension 5	L_5	in	14.750	12.235	16.486	16.486
Detailing Dimension 6	L_6	in	NA	6.180	5.782	5.782
Lap With Brace	L_b	in	11	11	10	10
Weld Gap		in	NA	1	1	1
Beam Edge Stiffener			Yes	Yes	Yes	Yes
Girder Edge Stiffener			No	Yes	Yes	Yes
Weld Size Brace-to-Gusset		in	5/16	5/16	5/16	5/16
Weld Size Beam-to-Gusset		in	5/16	3/8	3/8	3/8
Weld Size Girder-to-Gusset		in	NA	3/8	3/8	3/8

* Nominal values in decimal form are provided for dimensions A, B, L1, L2, L3, L4, L5 and L6. The tolerance for these dimensions is + 1/16".

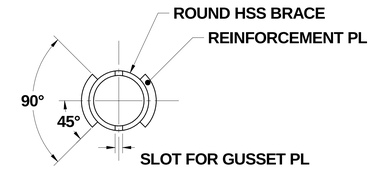

2/6 BRACE CROSS-SECTION AT REINFORCEMENT

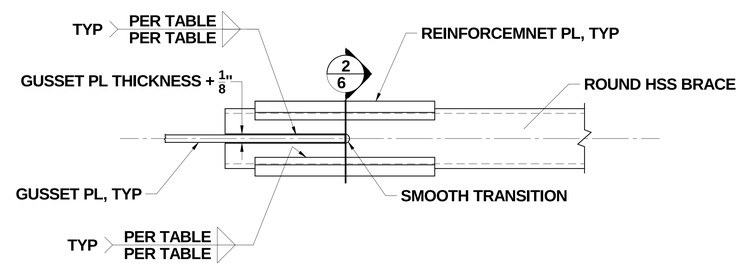

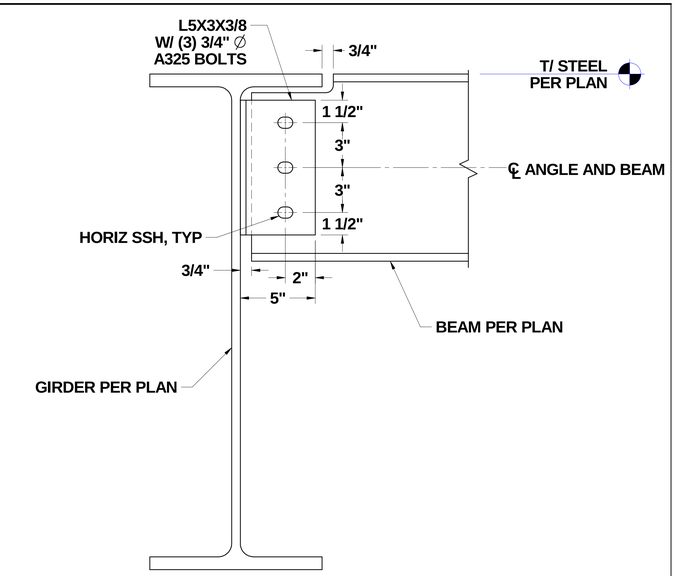

1/6 BEAM HORIZONTAL SLIP CONNECTION

NOTE: FOR INFORMATION NOT SHOWN, REFERENCE 1/S5.

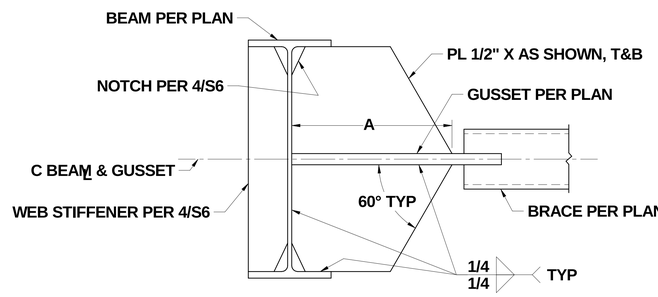

3/6 BRACE DETAIL

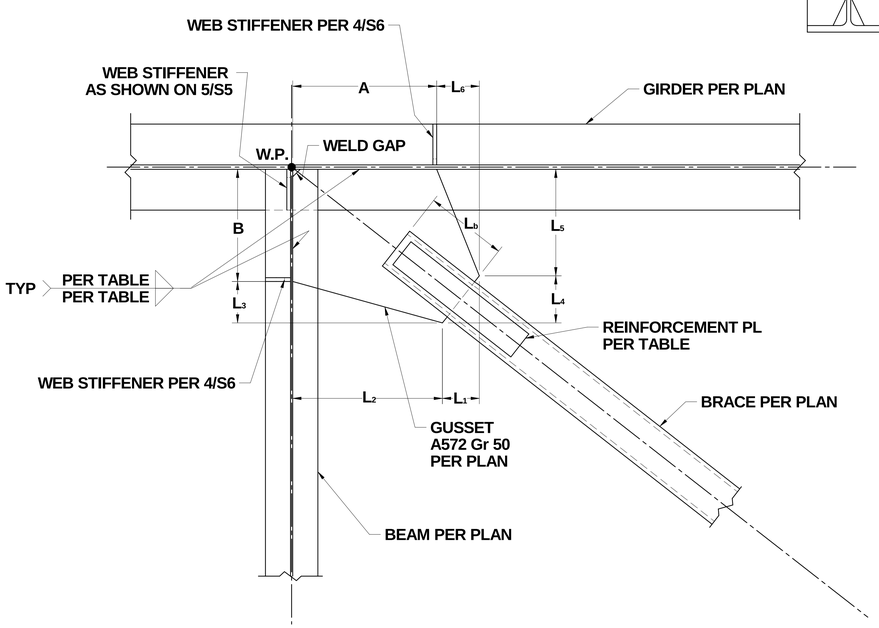

6/6 GUSSET PL CONNECTION TO BEAM WEBS

NOTE: TOP BEAM FLANGE NOT SHOWN FOR CLARITY.
LOCATE GUSSET AT MID DEPTH OF BEAM, TYP.

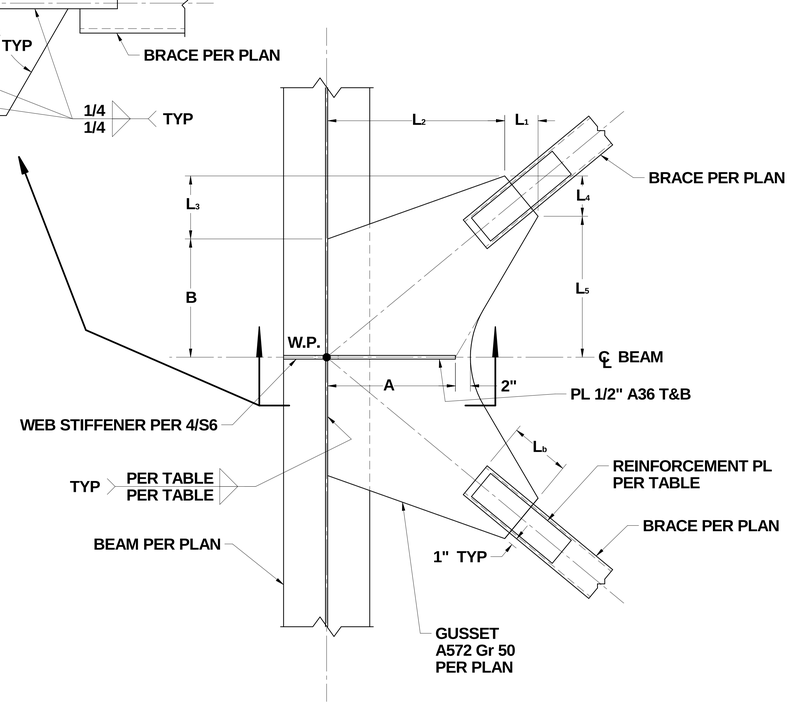

5/6 GUSSET PL CONNECTION TO BEAM MIDSPAN

NOTE: TOP BEAM FLANGE NOT SHOWN FOR CLARITY.
LOCATE GUSSET AT MID DEPTH OF BEAM, TYP.

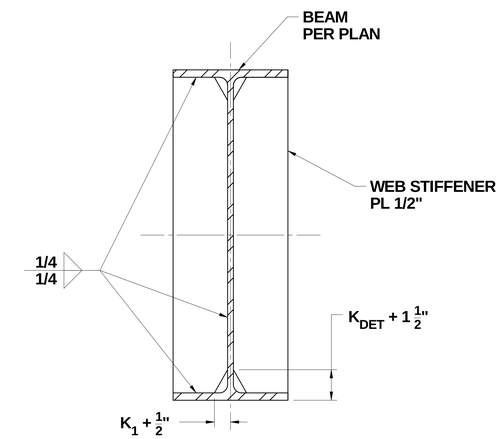

4/6 WEB STIFFENER PLATE DETAIL

PUGET SOUND NAVAL SHIPYARD
CODE 2370
ENGINEERING DIVISION

NO DEVIATIONS SHALL BE MADE
WITHOUT CODE 2370 APPROVAL

DRAWING NO. 2370-1831

TITLE RAE BRIDGE (DD5)

SCALE N/A | Sheet 6 of 21 | REV. ORIG

SHEET 6 | REV. ORIG | TITLE RAE BRIDGE (DD5) | DWG. NO. 2370-1831

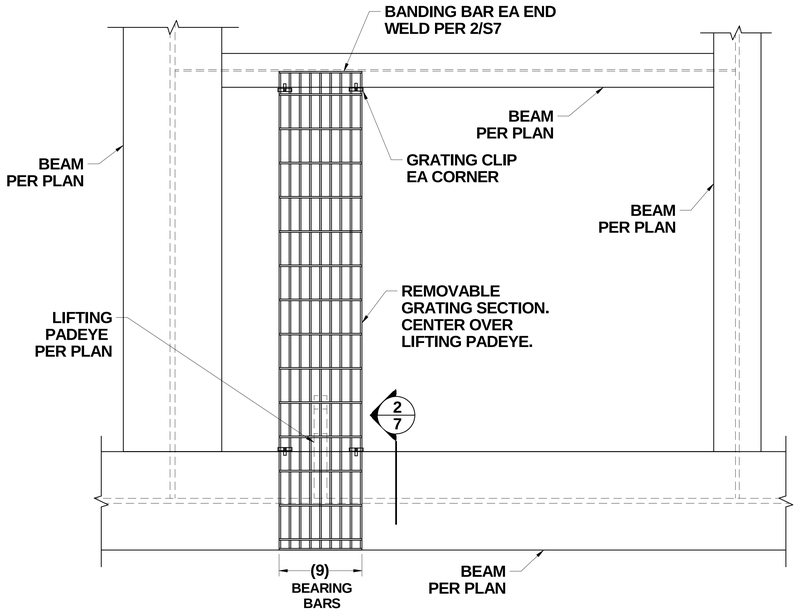

3/7 REMOVABLE GRATING AT LIFTING CONNECTION

NOTE: PERMANENT GRATING NOT SHOWN FOR CLARITY.

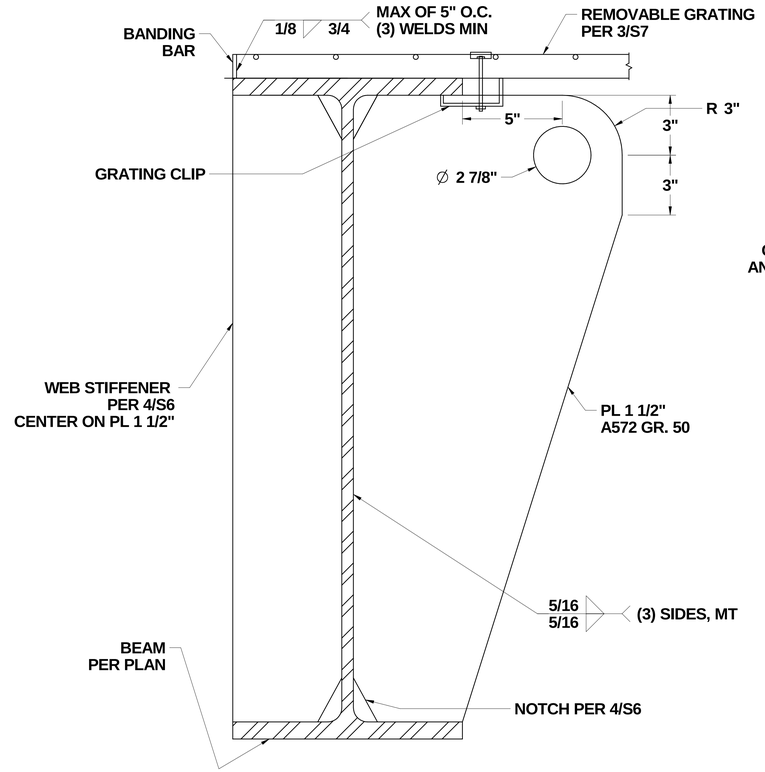

2/7 BRIDGE LIFTING PADEYE

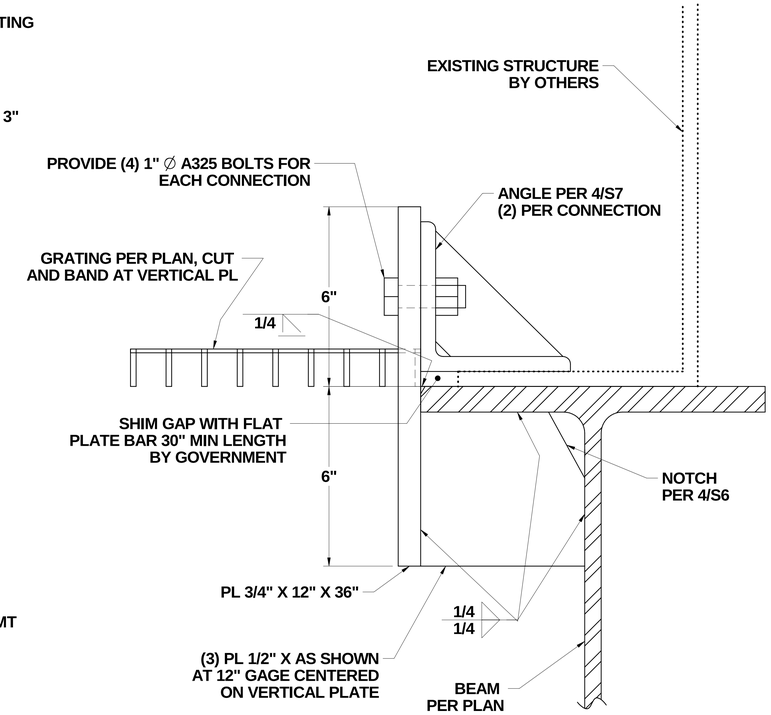

1/7 RAE TO BRIDGE CONNECTION

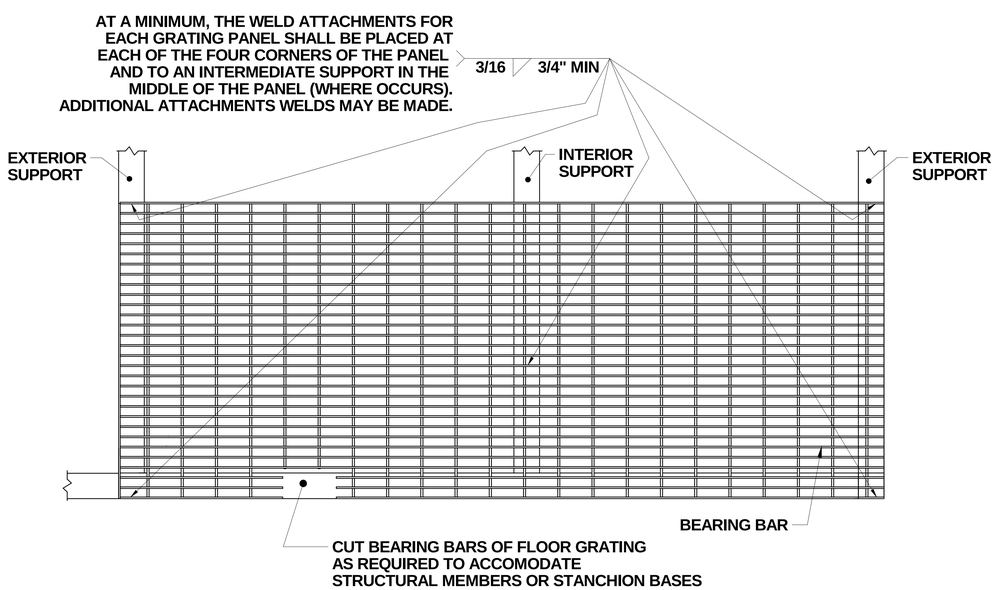

6/7 GRATING ATTACHMENT DETAIL

NOTE: BAND ALL CUT BEARING BARS.

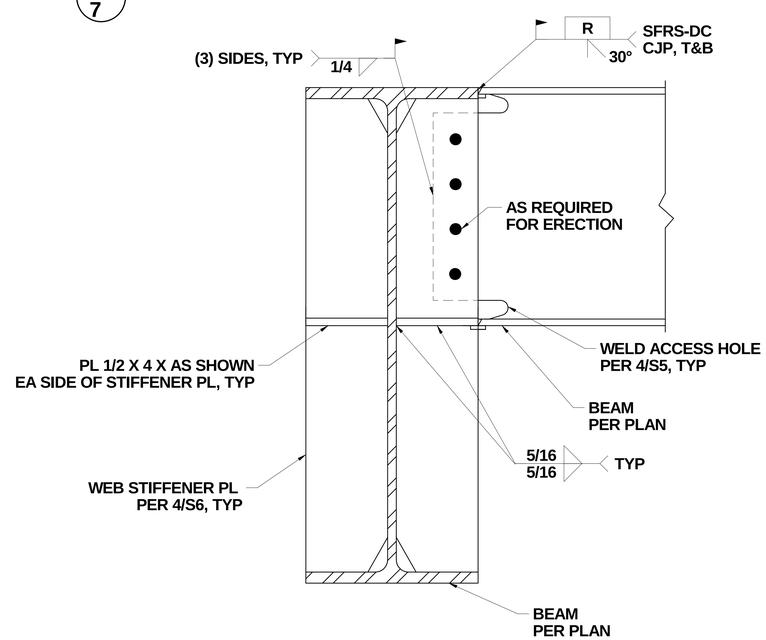

5/7 BEAM CONNECTION

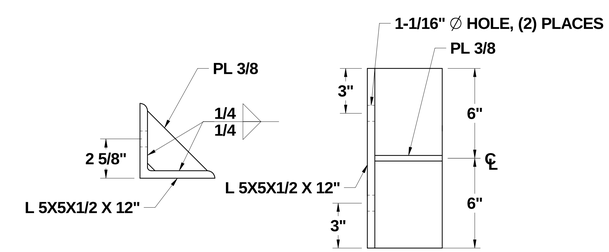

4/7 RAE CONNECTION ANGLE

PUGET SOUND NAVAL SHIPYARD
CODE 2370
ENGINEERING DIVISION

NO DEVIATIONS SHALL BE MADE
WITHOUT CODE 2370 APPROVAL

DRAWING NO. 2370-1831

TITLE **RAE BRIDGE (DD5)**

SCALE N/A | Sheet 7 of 21 | REV. ORIG

SHEET 7 | REV. ORIG | TITLE RAE BRIDGE (DD5) | DWG. NO. 2370-1831

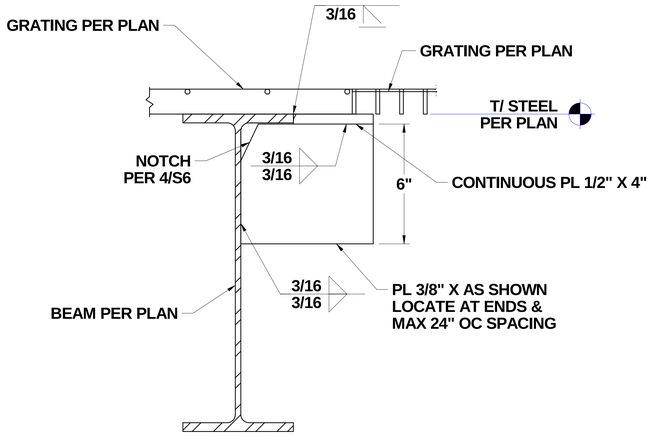

3/8 E-W GRATING SUPPORT DETAIL

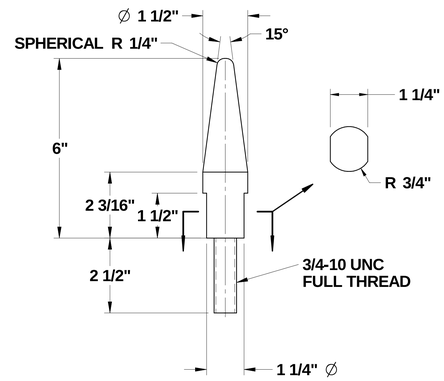

2/8 RAE ALIGNMENT PIN

NOTE: FABRICATE TWO PINS PER BRIDGE.

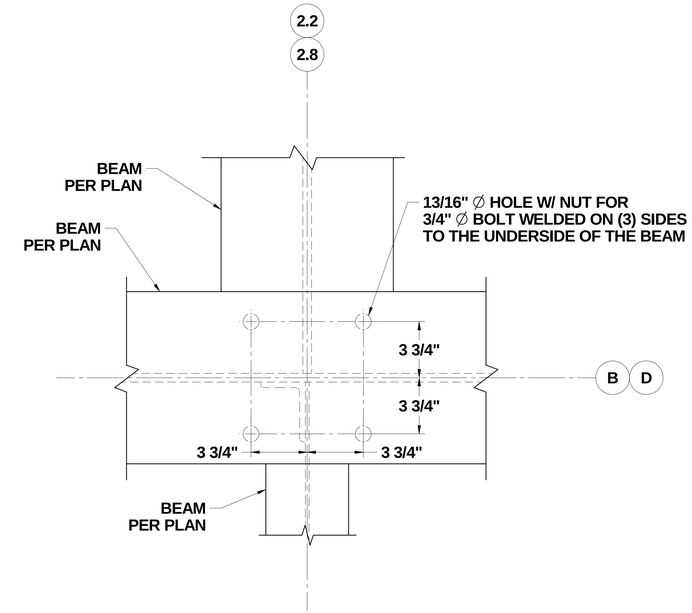

1/8 BRIDGE CONNECTION HOLES

NOTE: INSTALL RAE ALIGNMENT PIN IN NW AND SW CORNERS.

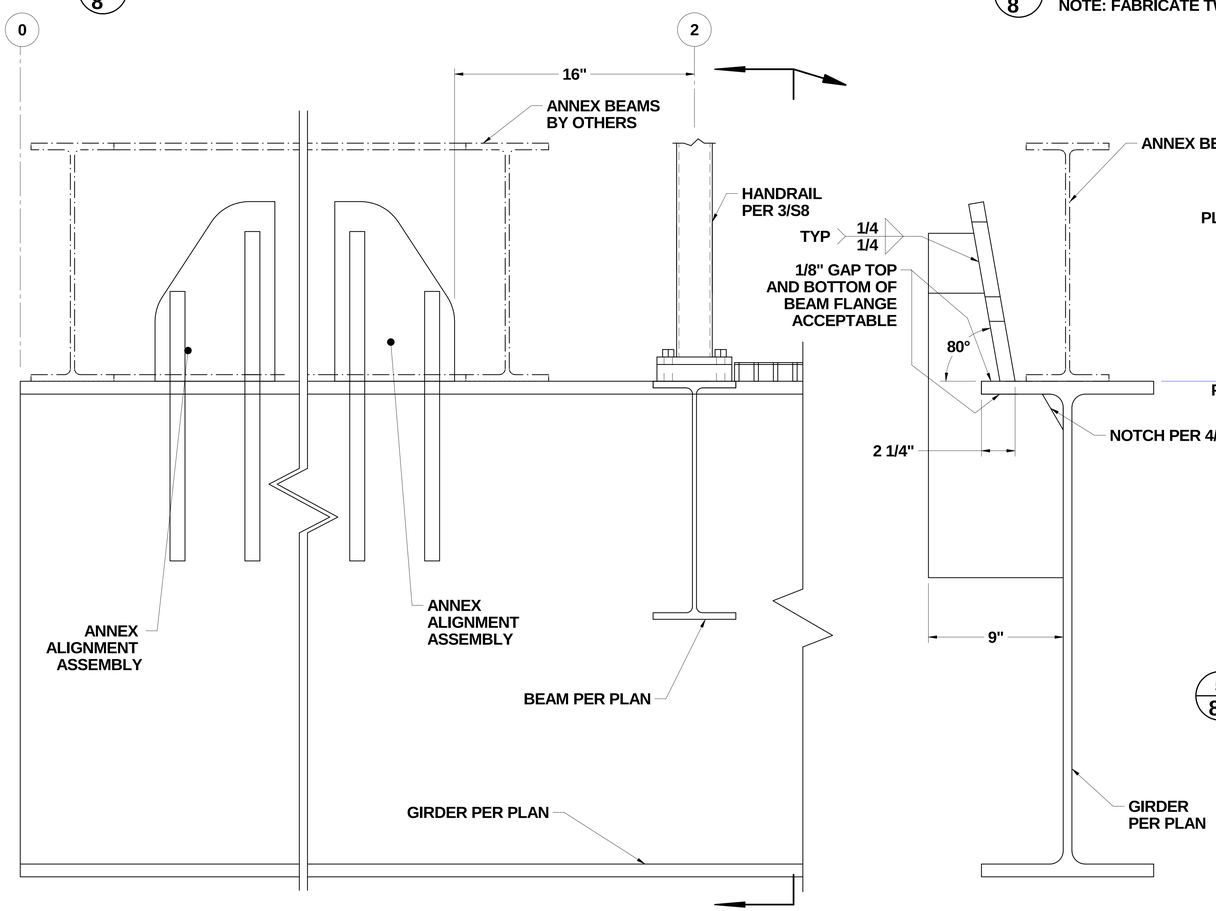

6/8 ANNEX ALIGNMENT PLATE TEST FIT LOCATIONS

NOTE: ALIGNMENT ASSEMBLY ON INTERIOR SIDE OF BRIDGE BEAMS, (4) PLACES.
DO NOT WELD TO GIRDERS, INSTALLATION OF ALIGNMENT PLATES WILL BE BY GOVERNMENT.

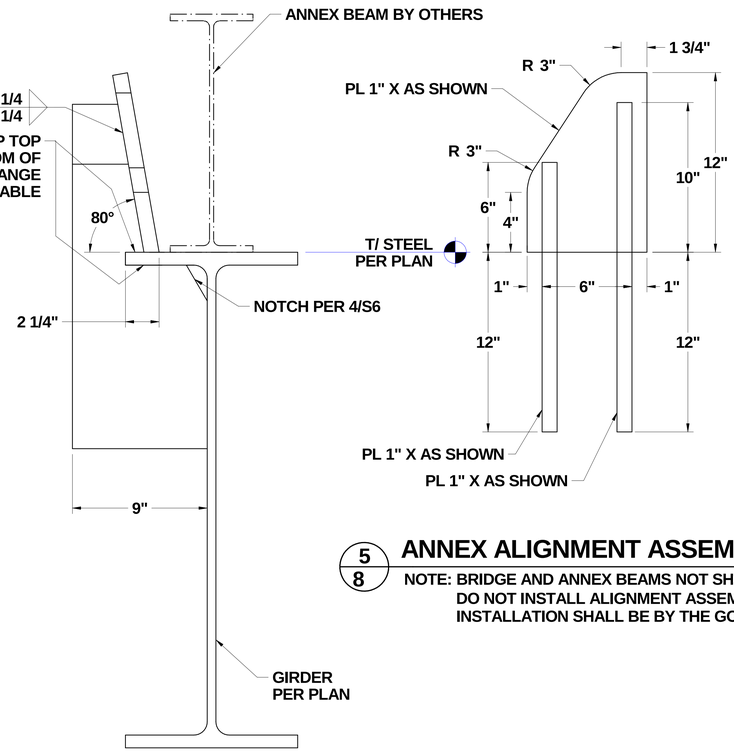

5/8 ANNEX ALIGNMENT ASSEMBLY

NOTE: BRIDGE AND ANNEX BEAMS NOT SHOWN.
DO NOT INSTALL ALIGNMENT ASSEMBLY,
INSTALLATION SHALL BE BY THE GOVERNMENT.

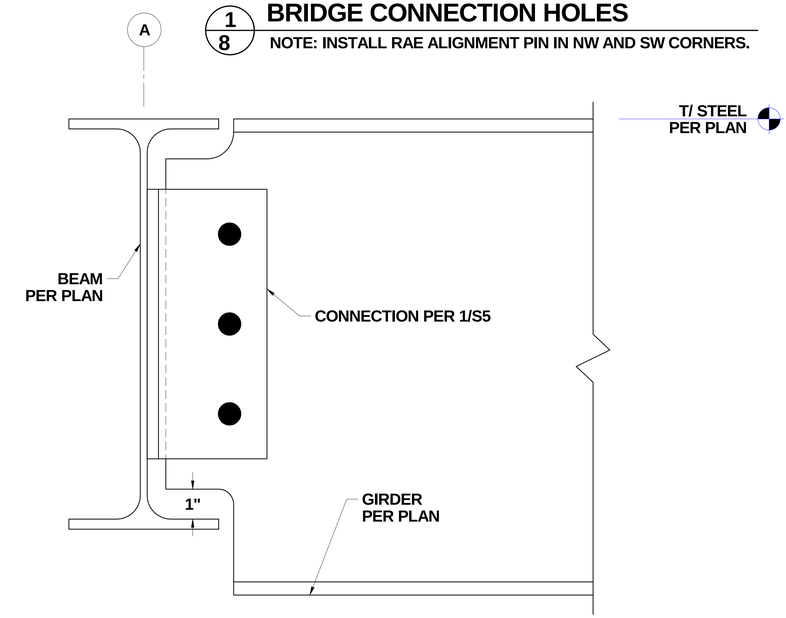

4/8 COPED BEAM CONNECTION

NOTE: FOR INFORMATION NOT SHOWN, REFERENCE 1/S5.

PUGET SOUND NAVAL SHIPYARD
CODE 2370
ENGINEERING DIVISION

NO DEVIATIONS SHALL BE MADE
WITHOUT CODE 2370 APPROVAL

DRAWING NO. 2370-1831

TITLE **RAE BRIDGE (DD5)**

SCALE N/A | Sheet 8 of 21 | REV. ORIG

DWG. NO. 2370-1831 | TITLE RAE BRIDGE (DD5) | REV. ORIG | SHEET 8

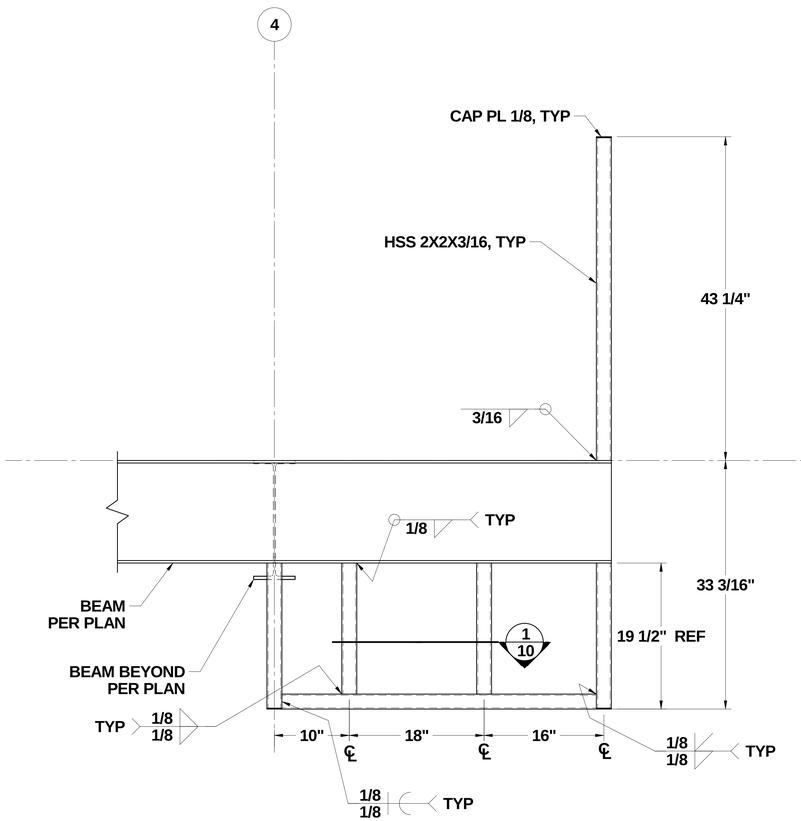

3/9 CAGE VIEW ON GRID A

NOTE: LADDER SUPPORT STEEL PER 1/S10

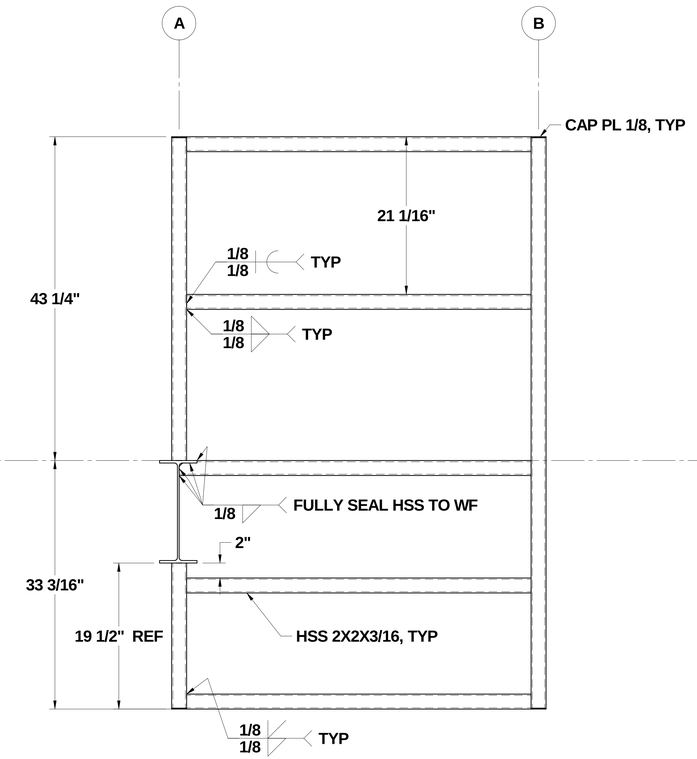

2/9 CAGE VIEW ON GRID 4 + 45"

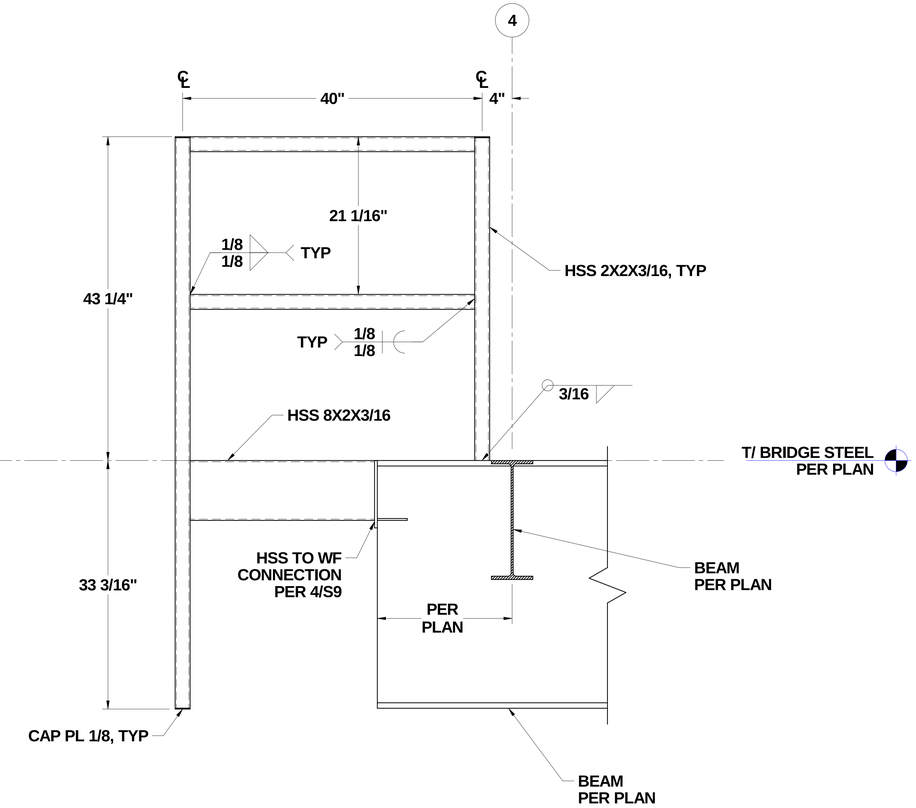

1/9 CAGE VIEW ON GRID B

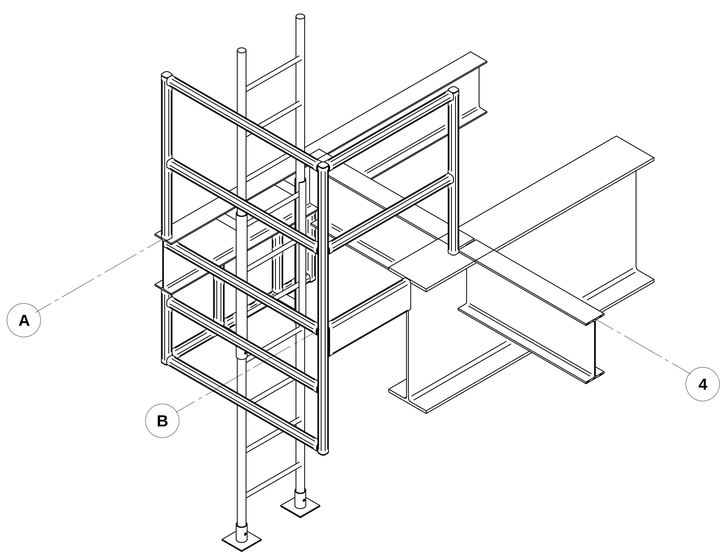

5/9 ISO VIEW OF STAIR CAGE ASSEMBLY

NOTE: BRIDGE HANDRAILS AND SWING-GATE NOT SHOWN

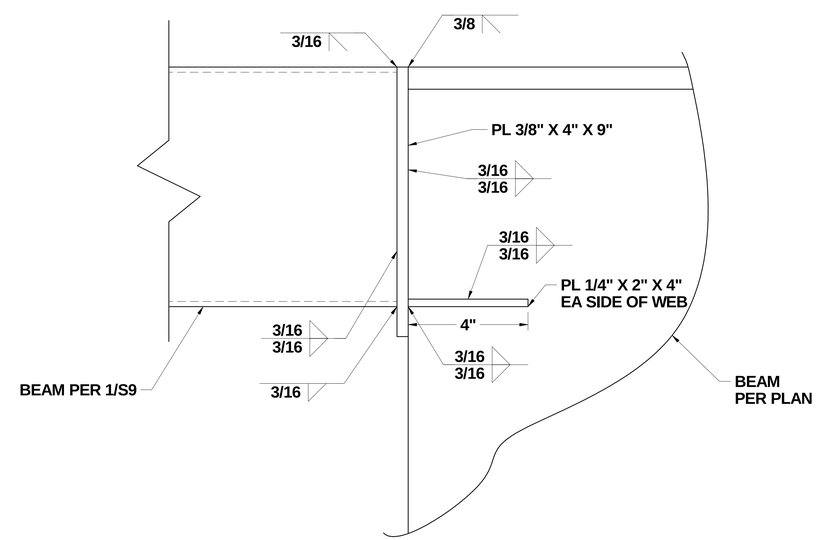

4/9 HSS TO WF CONNECTION

PUGET SOUND NAVAL SHIPYARD
CODE 2370
ENGINEERING DIVISION

NO DEVIATIONS SHALL BE MADE
WITHOUT CODE 2370 APPROVAL

DRAWING NO. 2370-1831

TITLE RAE BRIDGE (DD5)

SCALE N/A | Sheet 9 of 21 | REV. ORIG

SHEET 9 | REV. ORIG | TITLE RAE BRIDGE (DD5) | DWG. NO. 2370-1831

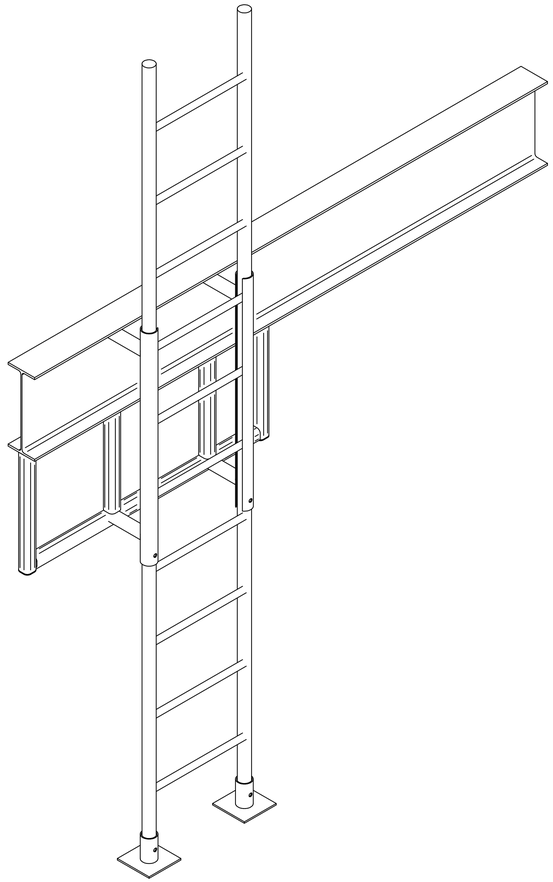

NOTE: CONDUCT FUNCTIONAL TEST TO ENSURE LADDER SLIDES FULLY UP AND DOWN WITHIN THE INSTALLED LADDER SUPPORT.

2/10 LADDER SUPPORT ISO VIEW

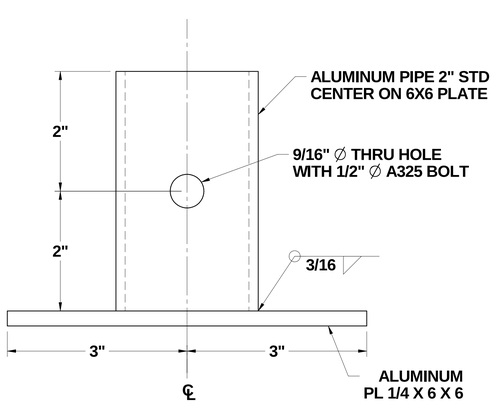

5/10 LADDER BASE

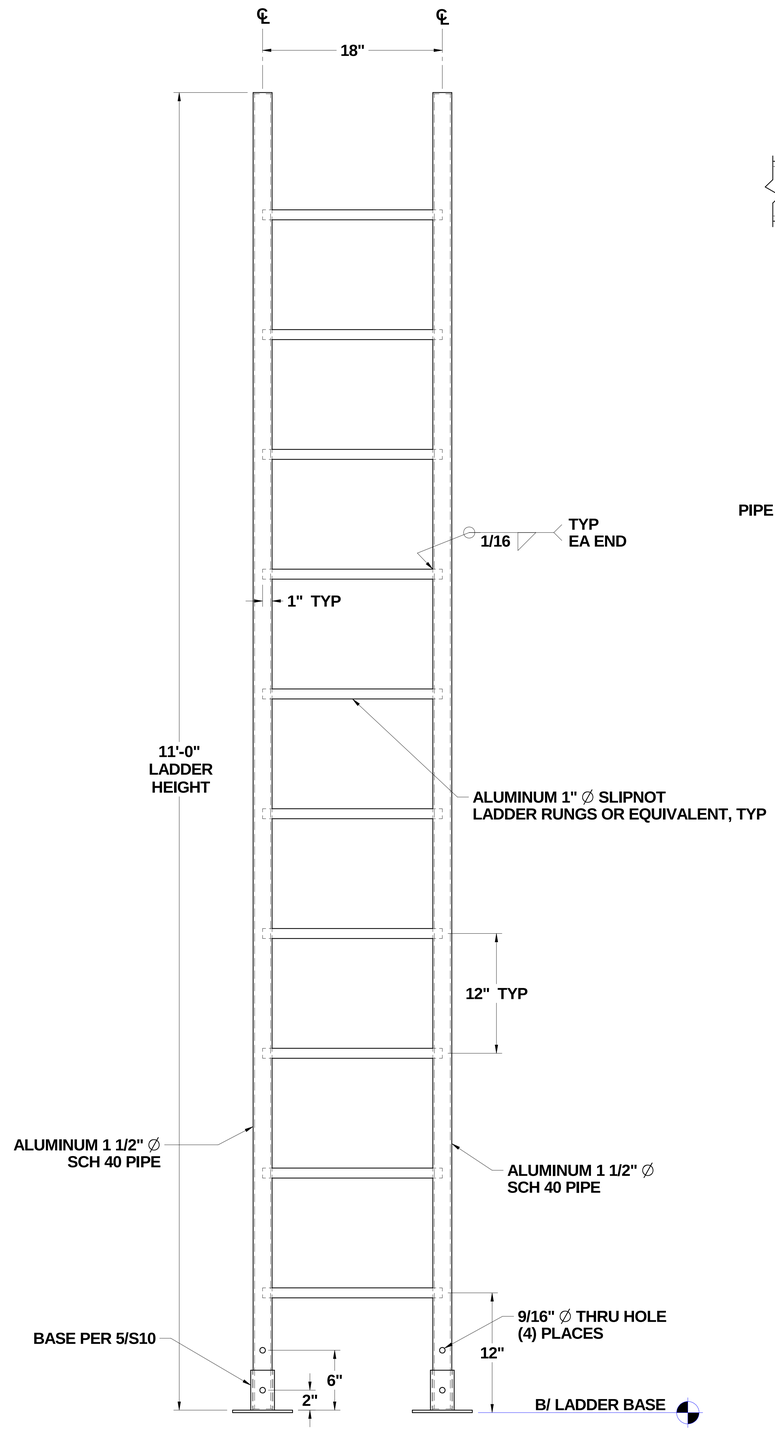

4/10 LADDER DETAIL

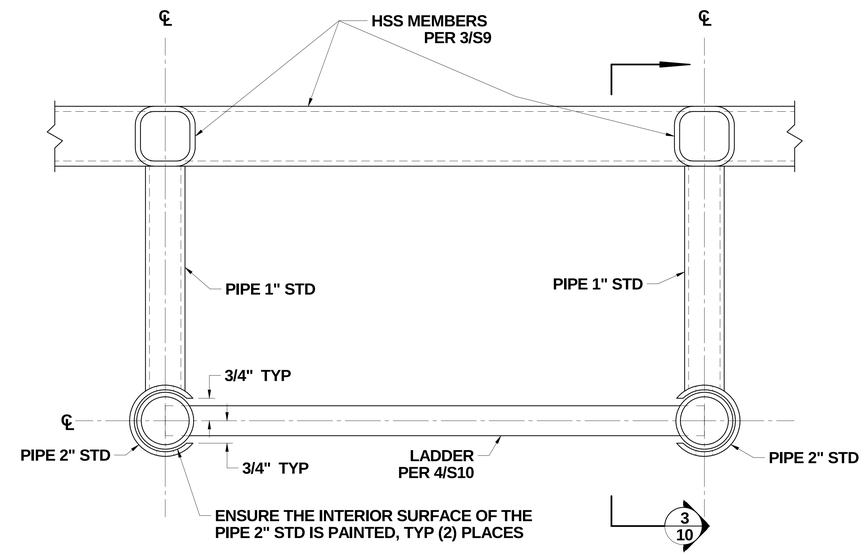

1/10 LADDER SUPPORT

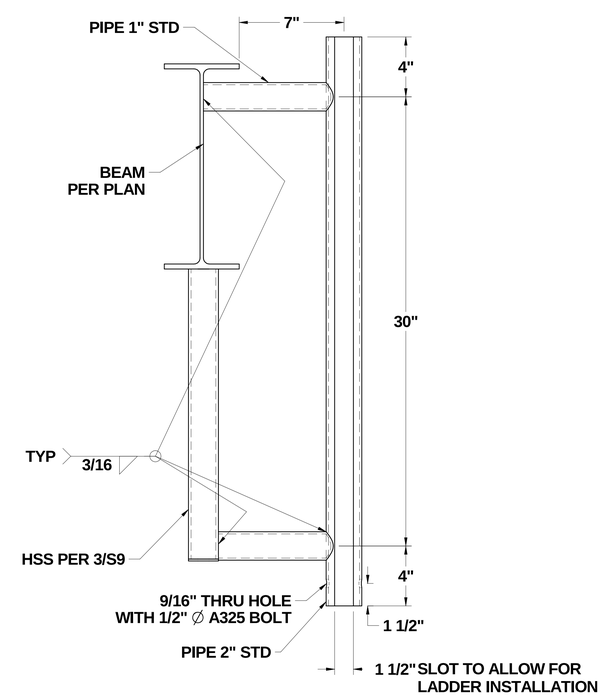

3/10 LADDER SUPPORT SECTION

NOTE: LADDER NOT SHOWN FOR CLARITY.

PUGET SOUND NAVAL SHIPYARD
CODE 2370
ENGINEERING DIVISION

NO DEVIATIONS SHALL BE MADE
WITHOUT CODE 2370 APPROVAL

DRAWING NO. **2370-1831**

TITLE **RAE BRIDGE (DD5)**

SCALE N/A | **Sheet 10 of 21** | REV. **ORIG**

SHEET 10 | REV. ORIG | TITLE RAE BRIDGE (DD5) | DWG. NO. 2370-1831

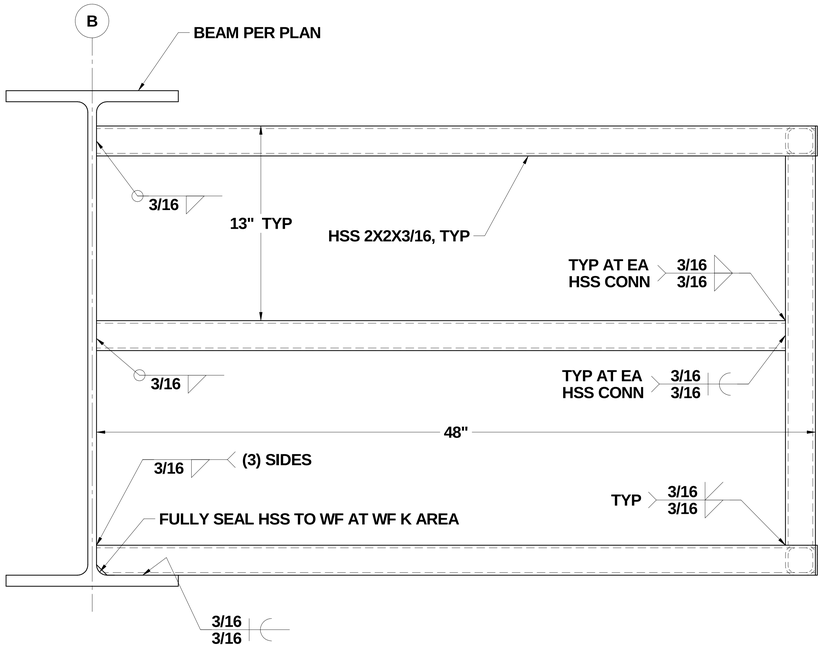

3/11 CAGE ELEVATION LOOKING EAST

NOTE: GRATING AND TOE BOARD NOT SHOWN FOR CLARITY.

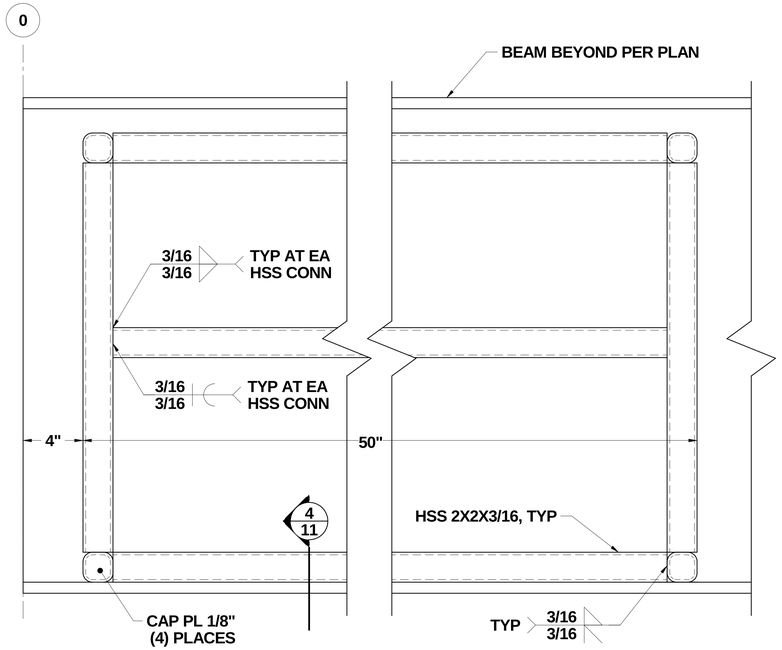

2/11 CAGE ELEVATION LOOKING NORTH

NOTE: GRATING AND TOE BOARD NOT SHOWN FOR CLARITY.

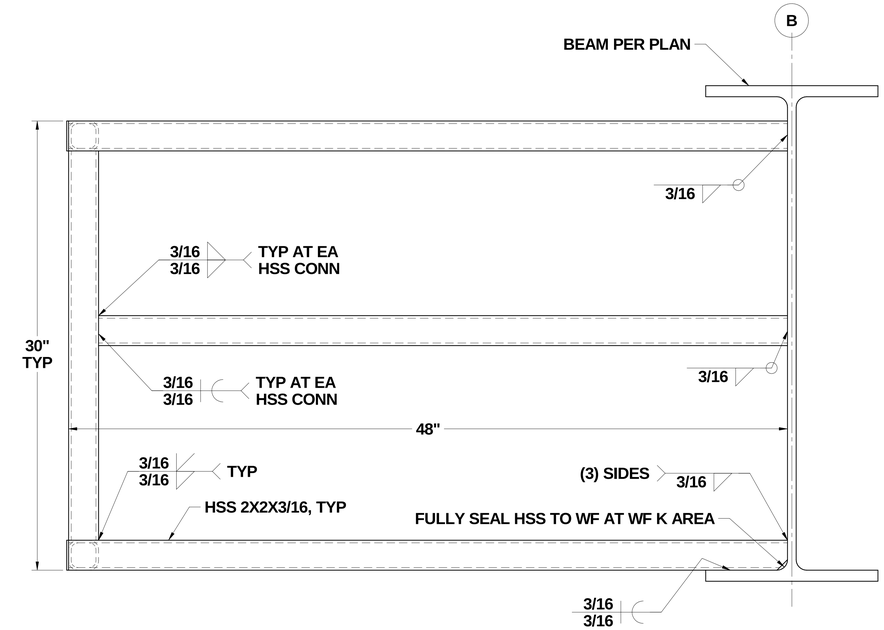

1/11 CAGE ELEVATION LOOKING WEST

NOTE: GRATING AND TOE BOARD NOT SHOWN FOR CLARITY.

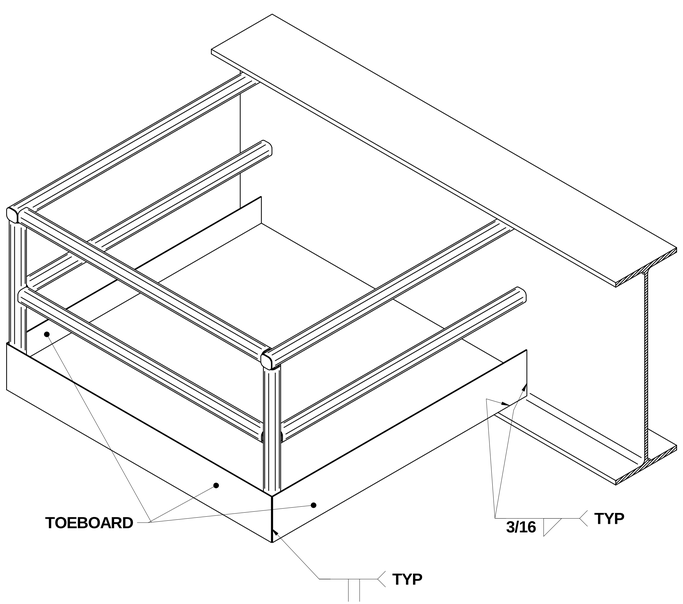

6/11 ISO VIEW OF SOUTH CAGE

NOTE: NORTH CAGE SIMILAR.

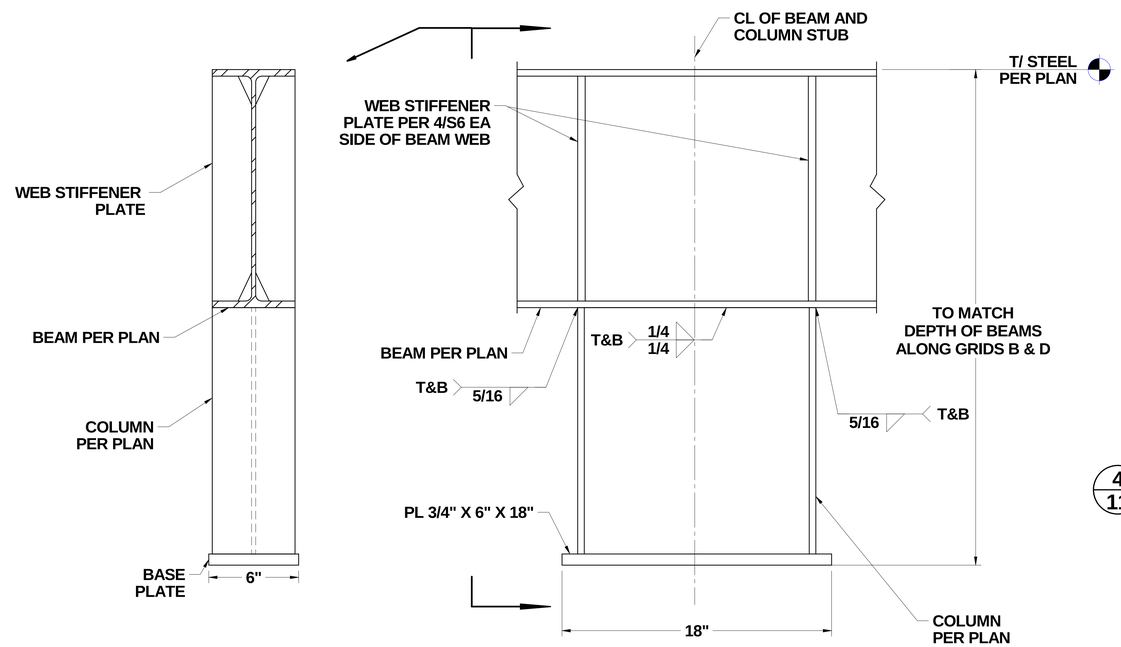

5/11 INTERIOR BRIDGE TO TOWER BEARING SUPPORT

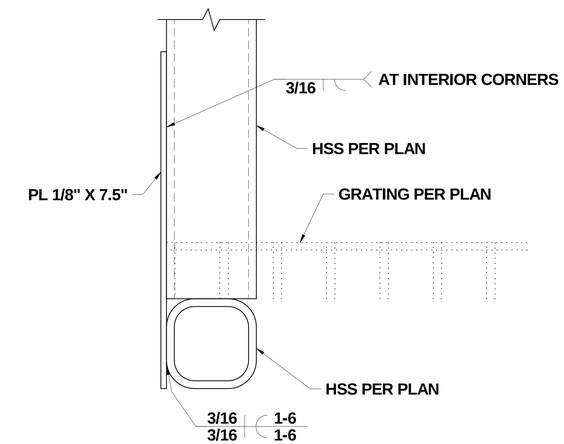

4/11 TOEBOARD ATTACHMENT DETAIL

NOTE: BEAM BEYOND NOT SHOWN.

PUGET SOUND NAVAL SHIPYARD
CODE 2370
ENGINEERING DIVISION

NO DEVIATIONS SHALL BE MADE WITHOUT CODE 2370 APPROVAL

DRAWING NO. 2370-1831

TITLE RAE BRIDGE (DD5)

SCALE N/A | Sheet 11 of 21 | REV. ORIG

SHEET 11 | REV. ORIG | TITLE RAE BRIDGE (DD5) | DWG. NO. 2370-1831

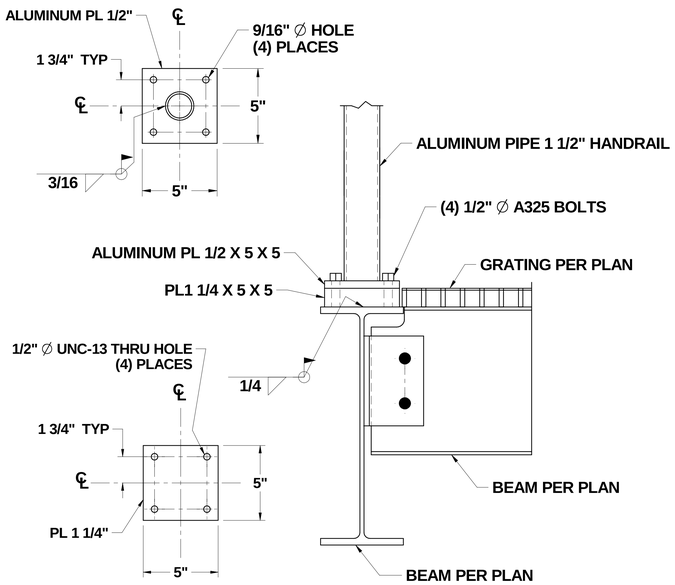

3/12 REMOVABLE HANDRAIL BASE

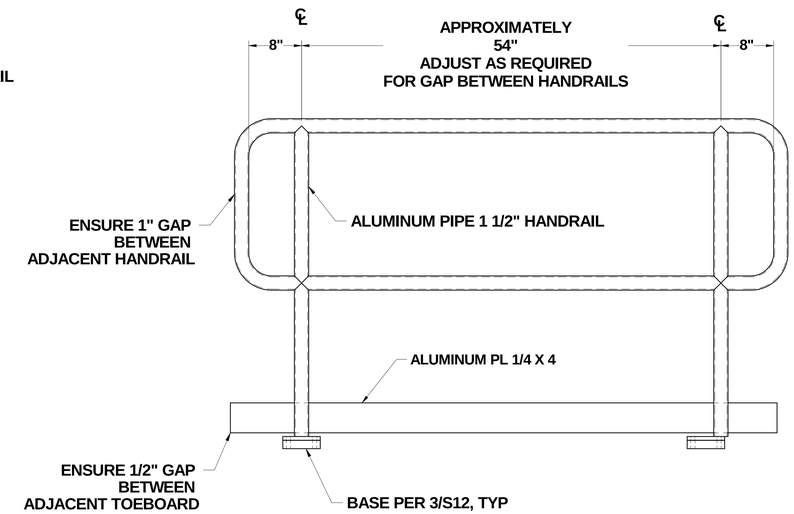

2/12 H2 REMOVABLE HANDRAIL

NOTE: (5) REQUIRED PER BRIDGE.
FOR INFORMATION NOT SHOWN REFERENCE 4/S12.

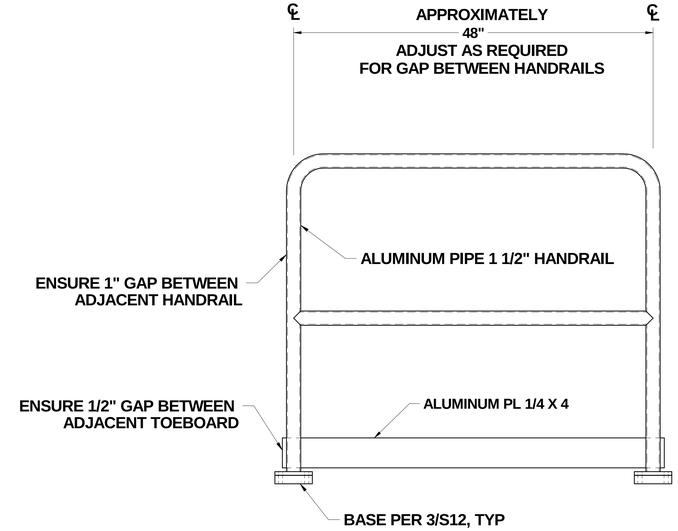

1/12 H1 REMOVABLE HANDRAIL

NOTE: (2) REQUIRED PER BRIDGE.
FOR INFORMATION NOT SHOWN REFERENCE 4/S12.

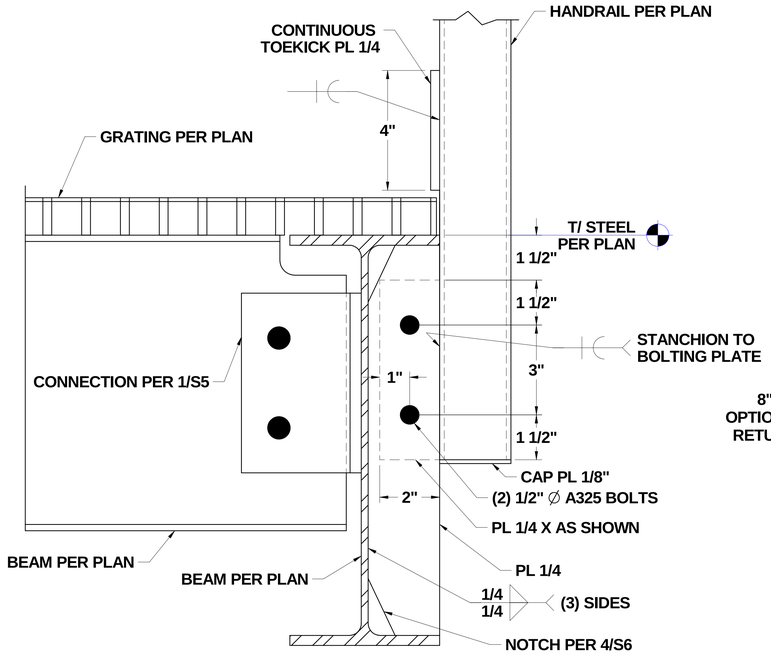

5/12 HANDRAIL CONNECTION

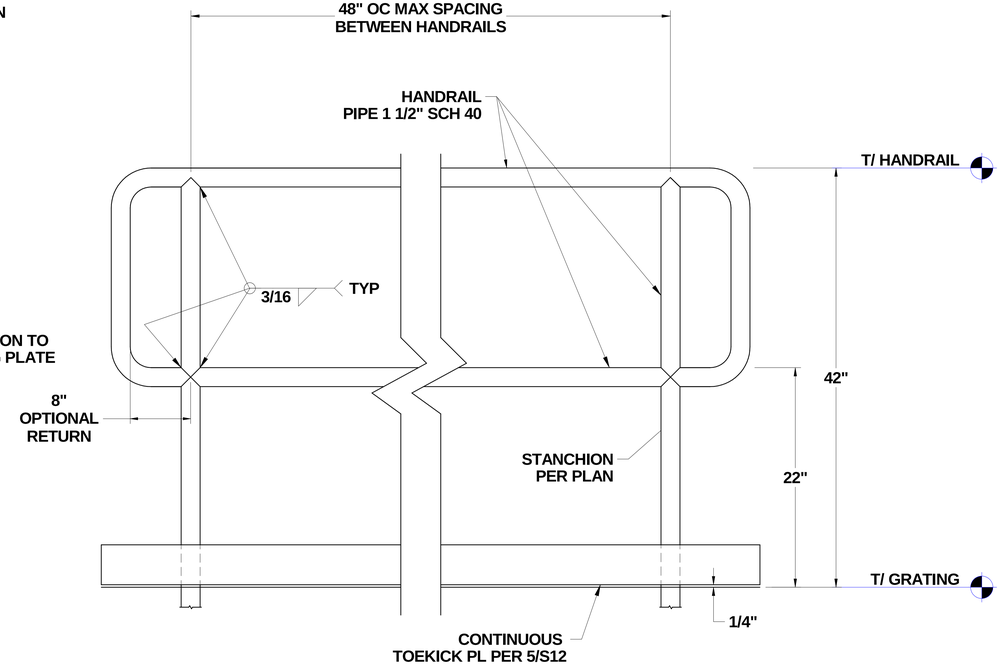

4/12 TYPICAL HANDRAIL CONSTRUCTION

NOTE: HANDRAIL CORNERS MAY BE ROUNDED OR MITRED.

PUGET SOUND NAVAL SHIPYARD
CODE 2370
ENGINEERING DIVISION

NO DEVIATIONS SHALL BE MADE
WITHOUT CODE 2370 APPROVAL

DRAWING NO. 2370-1831

TITLE **RAE BRIDGE (DD5)**

SCALE N/A | **Sheet 12 of 21** | REV. **ORIG**

SHEET 12 | REV. ORIG | TITLE RAE BRIDGE (DD5) | DWG. NO. 2370-1831

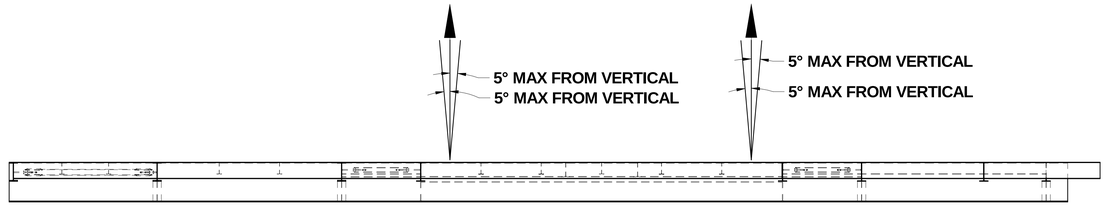

4/13 LOAD TEST CONFIGURATION

NOTE: COAMING AND HANDRAILS NOT SHOWN FOR CLARITY

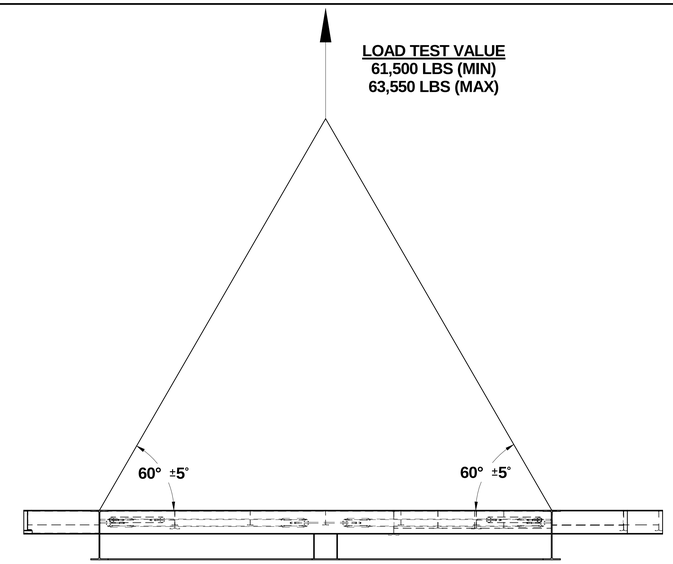

1/13 LOAD TEST CONFIGURATION

NOTE: COAMING AND HANDRAILS NOT SHOWN FOR CLARITY

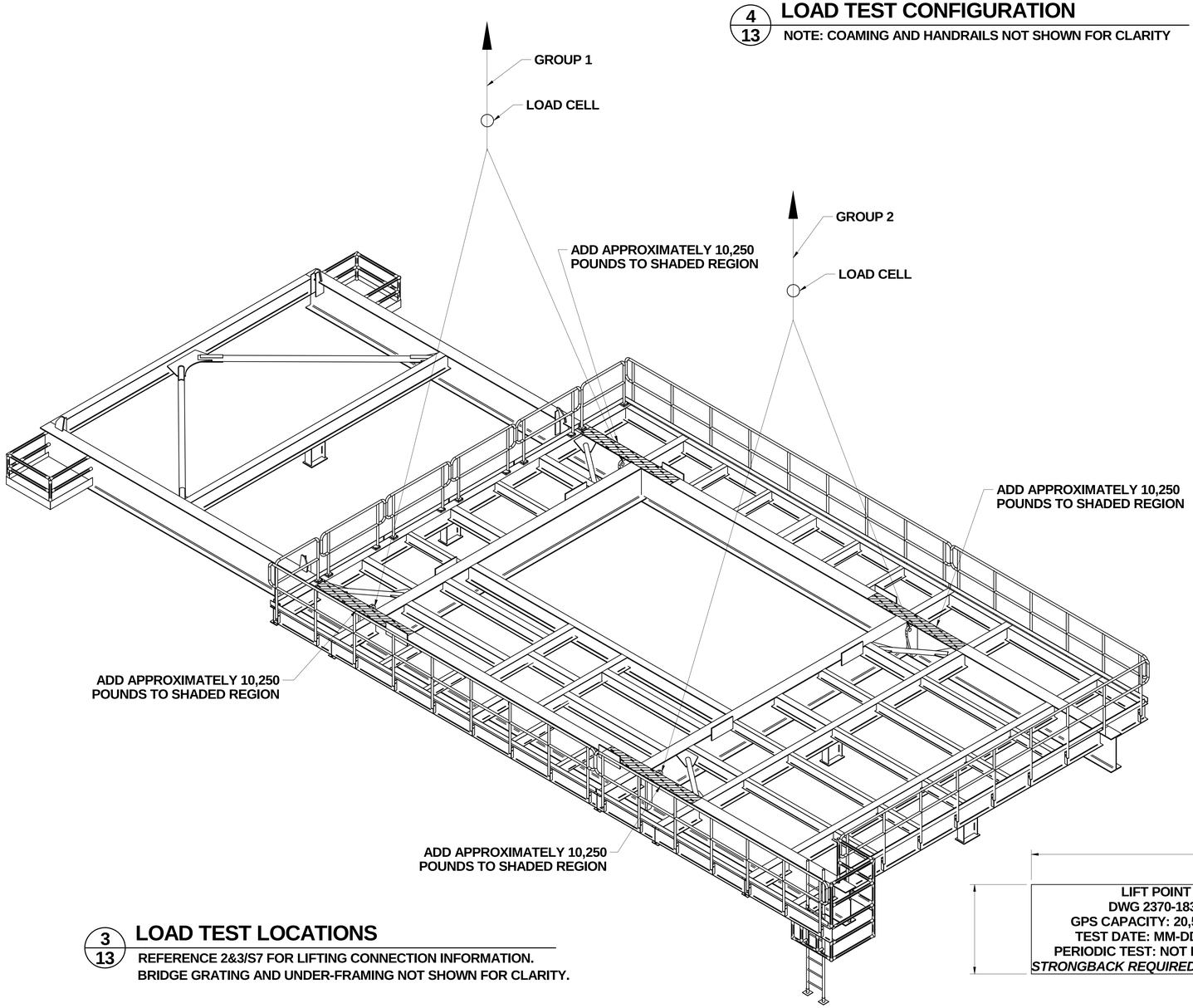

3/13 LOAD TEST LOCATIONS

REFERENCE 2&3/S7 FOR LIFTING CONNECTION INFORMATION.
BRIDGE GRATING AND UNDER-FRAMING NOT SHOWN FOR CLARITY.

LIFT POINT
DWG 2370-1831
GPS CAPACITY: 20,500 LBS
TEST DATE: MM-DD-YYYY
PERIODIC TEST: NOT REQUIRED
STRONGBACK REQUIRED FOR LIFTING

2/13 LABEL PLATE FOR LIFT POINT

TYPICAL (4) PLACES

LOAD TESTING AND NDT FOR BRIDGE STRUCTURE:

I. PRIOR TO AND FOLLOWING LOAD TEST, INSPECT EACH LIFT PAD (2/S7) AS FOLLOWS:

A) **MATERIAL:** MT THE ACCESSIBLE PORTIONS OF THE LIFT PAD MATERIAL PER NAVSEA PUBLICATION T9074-AS-GIB-010/271. USE THE ACCEPTANCE CRITERIA OF MIL-STD-2035, FORGINGS AND WROUGHT MATERIAL. VISUALLY INSPECT FOR DEFORMATION OR OBVIOUS DAMAGE SUCH AS CRACKED, DISTORTED, OR CORRODED MATERIAL, OR ANY DEFICIENCY THAT MAY AFFECT THE LIFTING CAPACITY OF THE LIFT PAD.

B) **WELDS:** MT THE ACCESSIBLE PORTIONS OF THE LIFT PAD ATTACHMENT WELDS PER NAVSEA PUBLICATION T9074-AS-GIB-010/271. USE THE ACCEPTANCE CRITERIA OF MIL-STD-2035, CLASS 3 FOR WELDS. VISUALLY INSPECT PER AWS D1.1 CLAUSE 6 PART C.

II. WEIGH THE BRIDGE PRIOR TO LOAD TESTING THE BRIDGE LIFT PADS. IF THE ASSEMBLED BRIDGE WEIGHS MORE THAN 82,000 POUNDS CONTACT PSNS CODE 2370.24 FOR REVISED LOAD TEST WEIGHTS.

III. ATTACH APPROXIMATELY 10,250 POUNDS OF TEST WEIGHT OVER THE BRIDGE GIRDER BEAMS ALONG GRIDS B & D NEAR EACH LIFT POINT BEING TESTED (TOTAL OF 41,000 POUNDS). THE TOTAL LOAD TEST WEIGHT FOR EACH GROUP OF LIFTING PADS SHALL BE 61,500 POUNDS (+ 2,050 POUNDS, - 0 POUNDS). ADJUST WEIGHT AS NECESSARY TO ACHIEVE THE REQUIRED WEIGHT. IF ATTACHING WEIGHT IS NOT FEASIBLE, SEE SECTION V AS AN OPTION.

IV. ATTACH SHACKLES AND PENDANTS OR GROMMETS TO THE LIFT PADS SHOWN IN GROUP ONE. WHEN ASSEMBLED, STRETCHED, AND LIFTED, THE PENDANTS OR GROMMETS SHOULD BE WITHIN 5 DEGREES OF THE PLANE OF THE LIFT PAD, AND APPROXIMATELY 60 DEGREES FROM HORIZONTAL. LIFT THE BRIDGE WITH THE ATTACHED WEIGHTS AND HOLD FOR A MINIMUM OF 10 MINUTES. ENSURE THAT THE LOAD CELL IS READING A TEST VALUE WITHIN THE RANGE SHOWN. REPEAT LOAD TEST FOR THE LIFT PADS SHOWN IN GROUP TWO.

V. IF USING ADDITIONAL TEST WEIGHT IS NOT FEASIBLE, THE FABRICATOR MAY RESTRAIN THE BRIDGE FROM MOVEMENT AND PULL ON THE LIFT PADS SHOWN IN GROUP ONE WITH THE REQUIRED 61,500 POUNDS (+ 2,050 POUNDS, - 0 POUNDS) AND HOLD FOR 10 MINUTES MINIMUM. THE ANGLE OF PULL ON THE LIFT PADS SHALL BE IN THE PLANE OF THE LIFT PAD, APPROXIMATELY 60 DEGREES FROM HORIZONTAL. REPEAT LOAD TEST FOR THE LIFT PADS SHOWN IN GROUP TWO.

VI. CONTRACTOR SHALL PROVIDE WRITTEN DOCUMENTATION THAT THE ABOVE LOAD TEST AND NDT REQUIREMENTS WERE SATISFACTORILY PERFORMED.

A) ENSURE DOCUMENTATION CLEARLY SPECIFIES PERFORMANCE OF “PRE” AND “POST” LOAD MT AND VISUAL INSPECTIONS, METHODS USED, ACCEPTANCE CRITERIA USED, AND ITEMS (PIECES AND WELDS) THAT WERE INSPECTED AND TESTED.

B) DOCUMENTATION SHALL CLEARLY IDENTIFY THE LOCATION OF EACH LIFT POINT.

C) USING A CALIBRATED LOAD CELL, RECORD THE LOAD CELL VALUES FOR EACH LOAD TEST.

VII. PAINT OR LASER CUT THE INFORMATION SHOWN IN 2/S13 USING ½” (MINIMUM) LETTERING ONTO A LABEL PLATE. LABEL PLATE SHALL BE 16 GA. MIN THICKNESS STAINLESS STEEL. ATTACH LABEL PLATE IN A VISIBLE LOCATION NEAR EACH OF THE FOUR LIFT POINTS USING 3M DOUBLE BACK TRIM TAPE OR EQUAL.

PUGET SOUND NAVAL SHIPYARD
CODE 2370
ENGINEERING DIVISION

NO DEVIATIONS SHALL BE MADE
WITHOUT CODE 2370 APPROVAL

DRAWING NO. **2370-1831**

TITLE **RAE BRIDGE (DD5)**

SCALE N/A | **Sheet 13 of 21** | REV. **ORIG**

REV. ORIG SHEET 13
TITLE RAE BRIDGE (DD5)
DWG. NO. 2370-1831

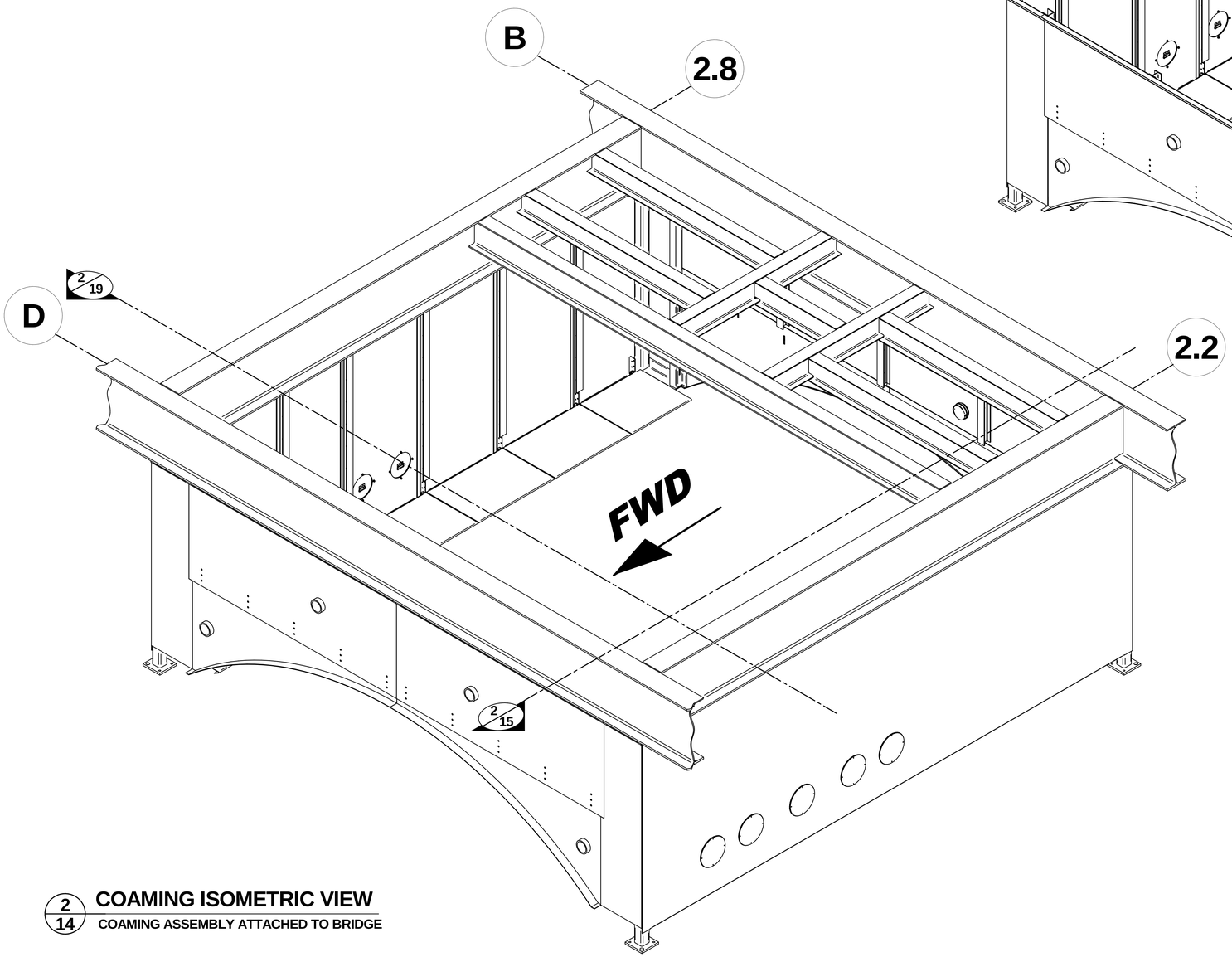

2/14 **COAMING ISOMETRIC VIEW**
COAMING ASSEMBLY ATTACHED TO BRIDGE

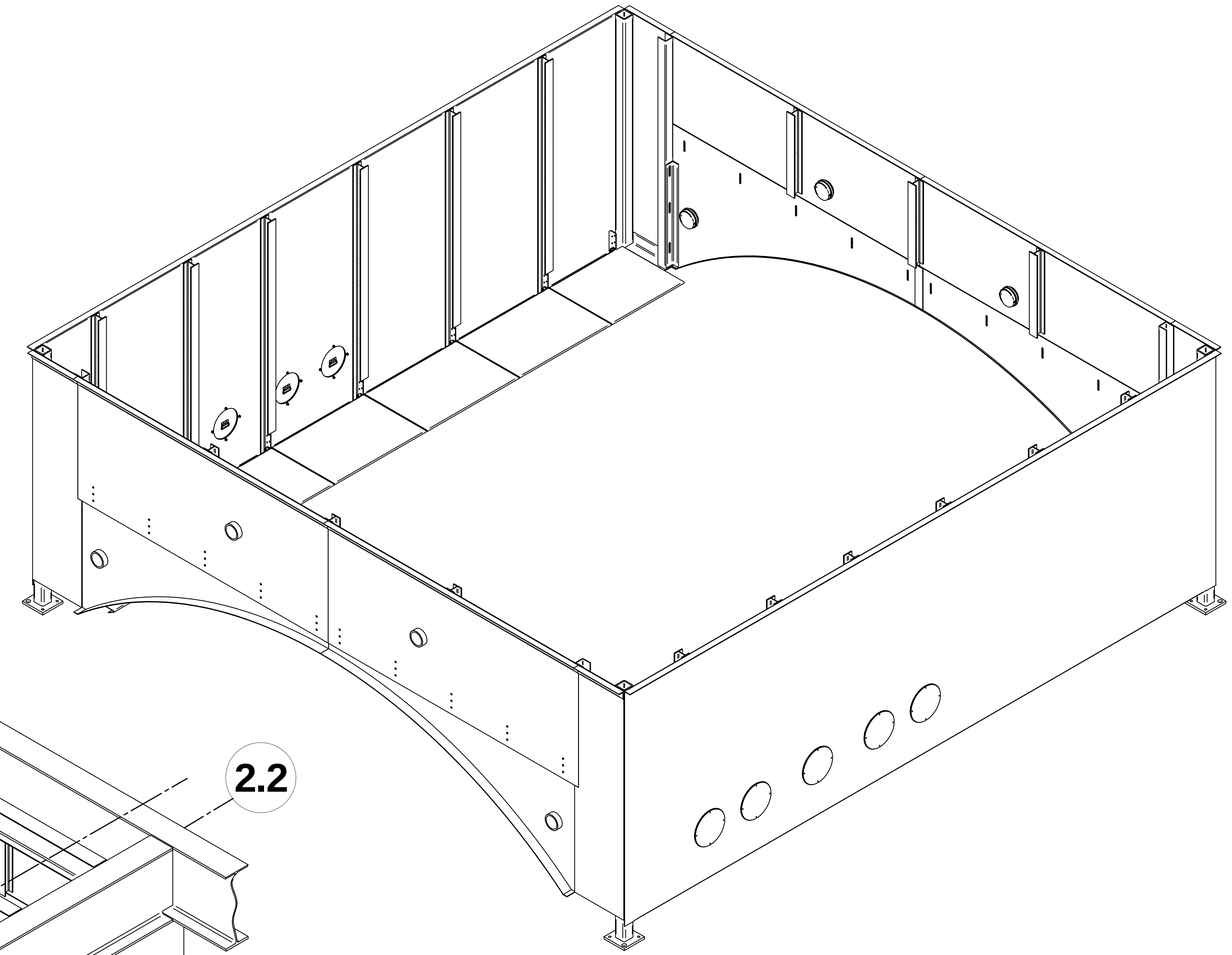

1/14 **COAMING ISOMETRIC VIEW**
COAMING ASSEMBLY ONLY

PUGET SOUND NAVAL SHIPYARD
CODE 2370
ENGINEERING DIVISION

NO DEVIATIONS SHALL BE MADE
WITHOUT CODE 2370 APPROVAL

DRAWING NO. **2370-1831**

TITLE **RAE BRIDGE (DD5)**

SCALE N/A | **Sheet 14 of 21** | REV. **ORIG**

TITLE RAE BRIDGE (DD5)
REV. ORIG
SHEET 13
DWG. NO. 2370-1831

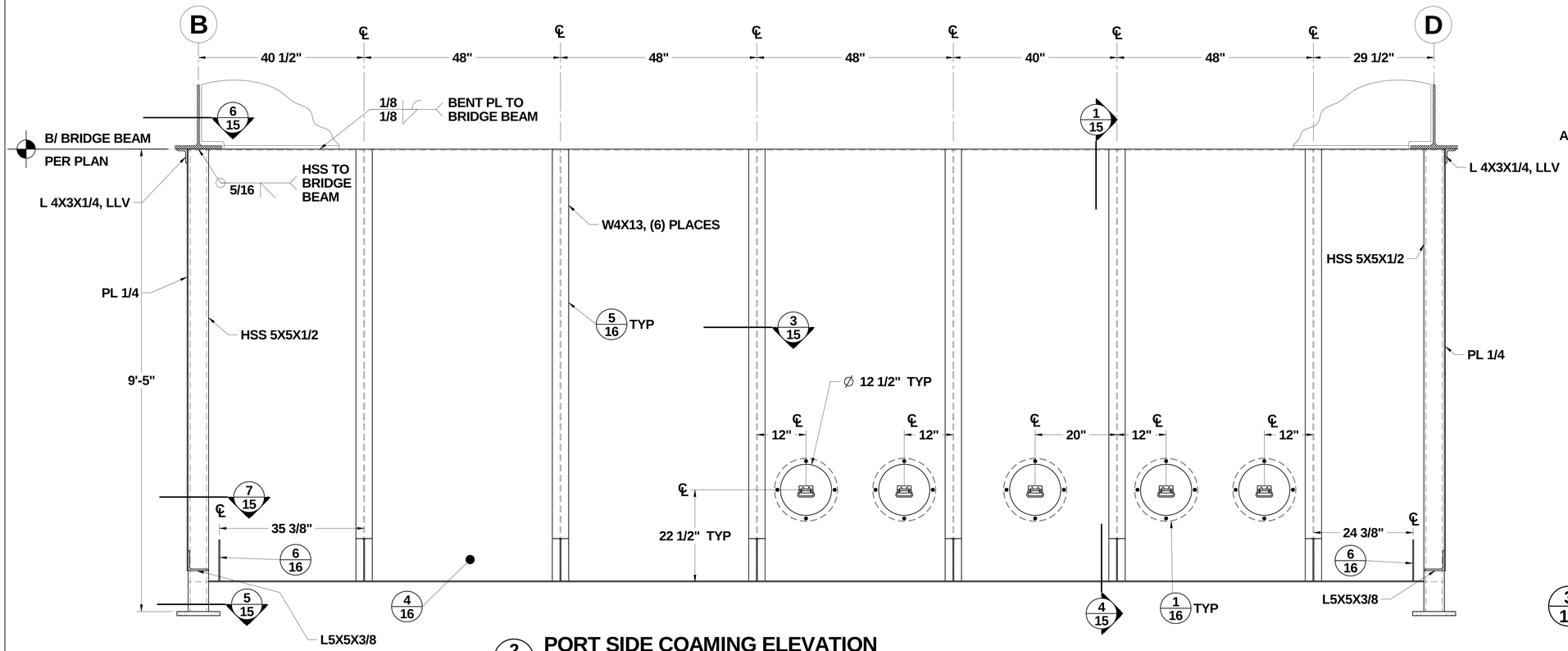

2/15 PORT SIDE COAMING ELEVATION

NOTE: STARBOARD SIDE COAMING OPPOSITE. PLATFORM PANELS NOT SHOWN FOR CLARITY.
PLATFORM PANELS SHOWN ON 5/S16.

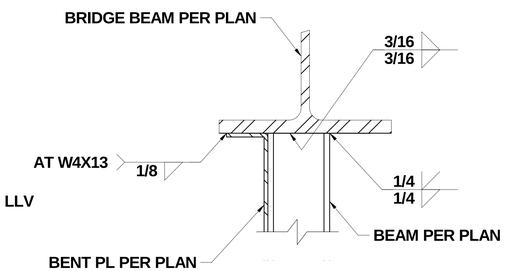

1/15 WF TO BEAM CONNECTION

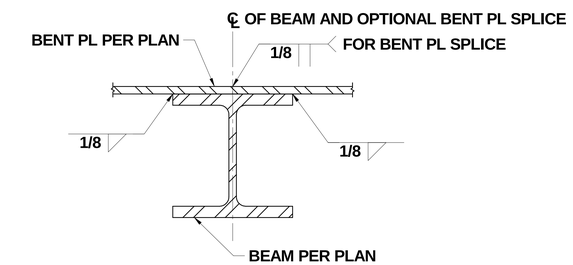

3/15 BENT PLATE TO WF STIFFENER CONNECTION

NOTE: OPTIONAL BENT PL SPLICE SHOWN IF FULL LENGTH BENT PLATE
CANNOT BE FABRICATED.

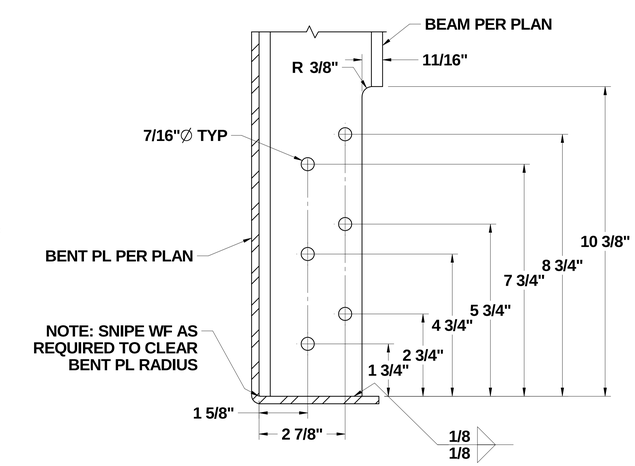

4/15 BENT PL TO WF CONNECTION

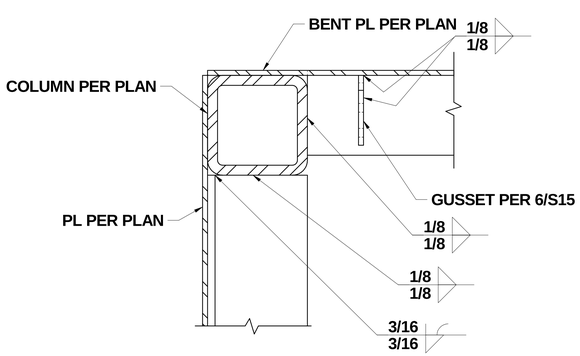

7/15 LOWER COLUMN CONNECTION DETAIL

NOTE: PLATE TO HSS CONNECTION PER 4/S15.

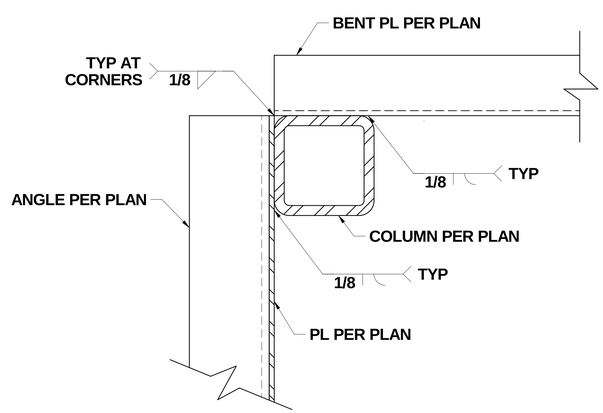

6/15 COLUMN TOP CONNECTION DETAIL

NOTE: BRIDGE STRUCTURE NOT SHOWN FOR CLARITY.

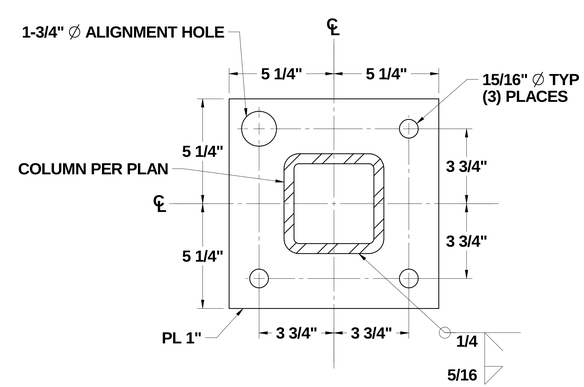

5/15 BASEPLATE DETAIL

NOTE: LOCATE ALIGNMENT HOLE FOR EACH
PLATE ON THE OUTBOARD CORNERS.

PUGET SOUND NAVAL SHIPYARD
CODE 2370
ENGINEERING DIVISION

NO DEVIATIONS SHALL BE MADE
WITHOUT CODE 2370 APPROVAL

DRAWING NO. 2370-1831

TITLE RAE BRIDGE (DD5)

SCALE N/A | Sheet 15 of 21 | REV. ORIG

SHEET 14 | REV. ORIG | TITLE RAE BRIDGE (DD5) | DWG. NO. 2370-1831

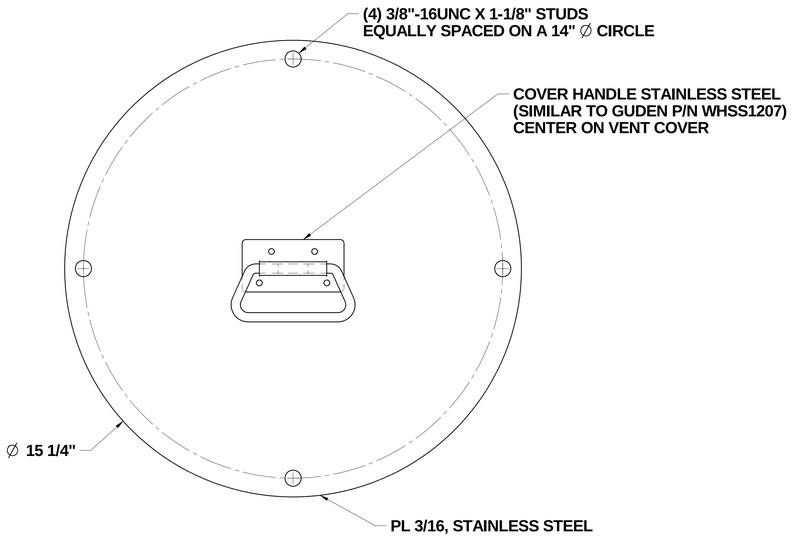

3/16 VENT COVER ASSEMBLY

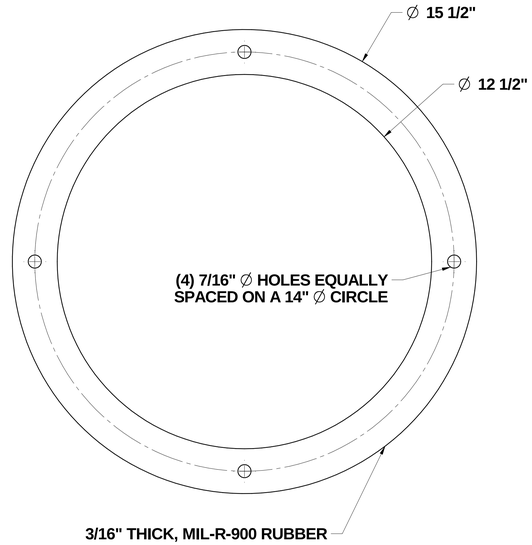

2/16 VENT COVER GASKET DETAIL

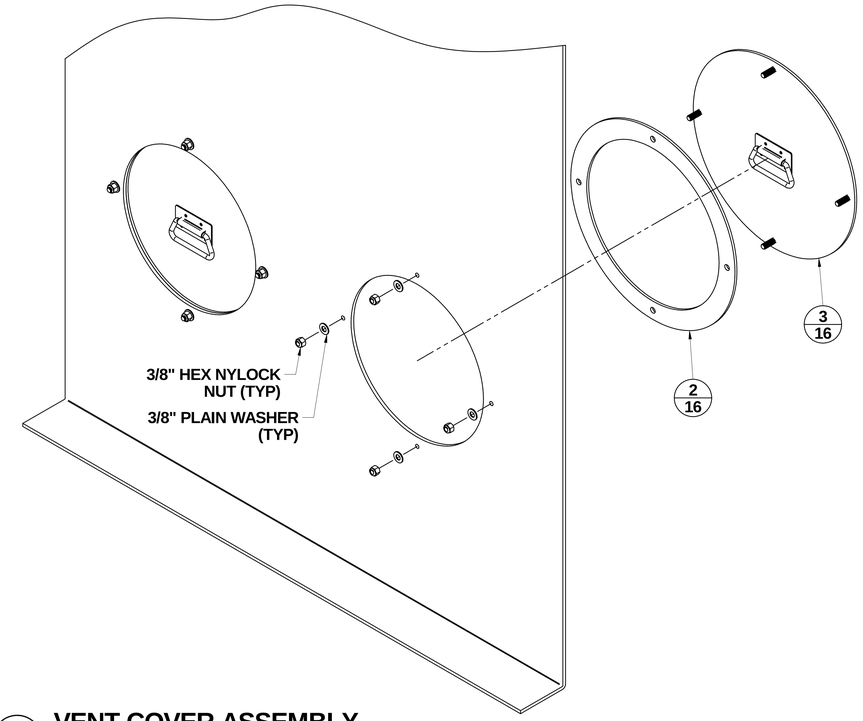

1/16 VENT COVER ASSEMBLY

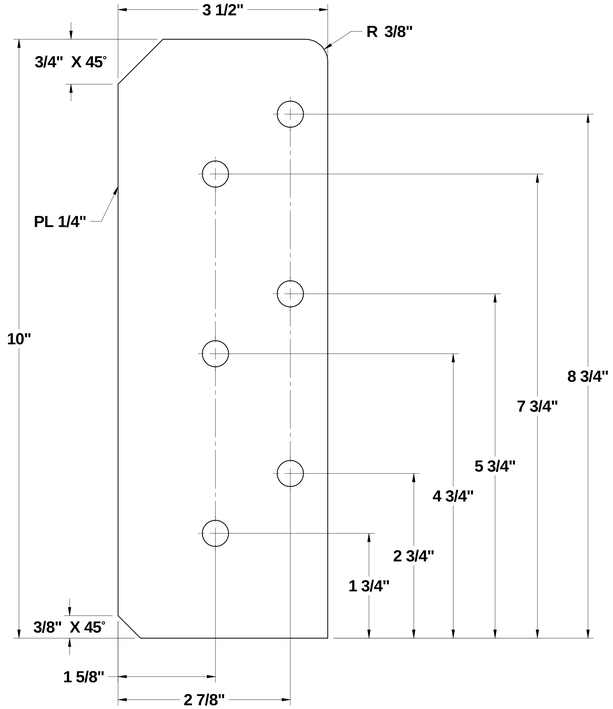

6/16 HINGE GUSSET PLATE

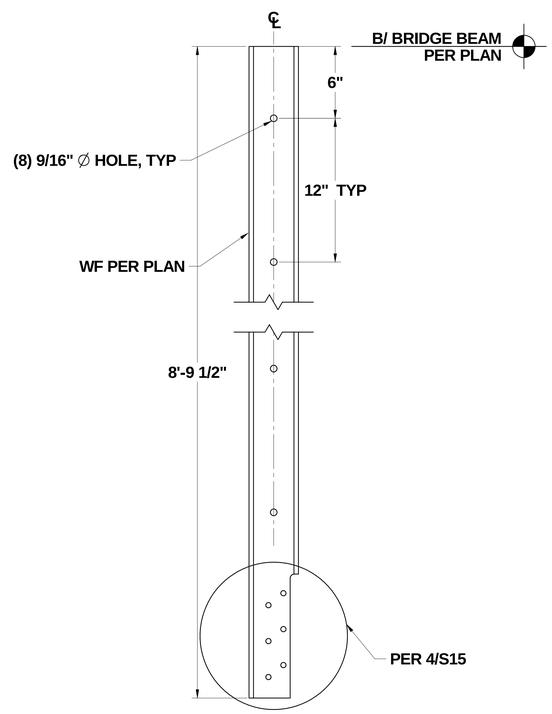

5/16 WF STIFFENER DETAIL

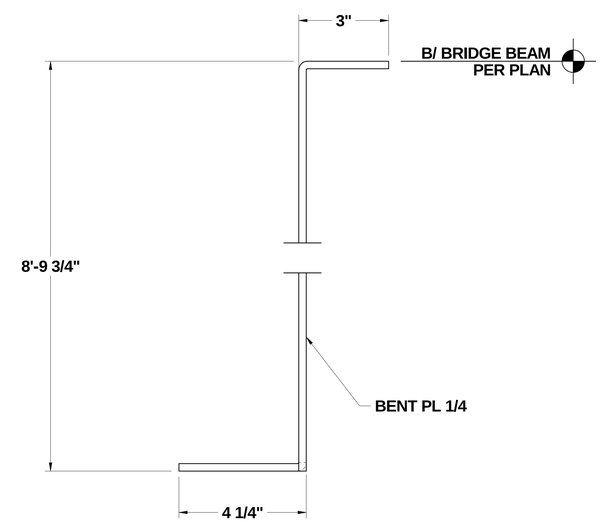

4/16 WALL BENT PLATE DETAIL

PUGET SOUND NAVAL SHIPYARD
CODE 2370
ENGINEERING DIVISION

NO DEVIATIONS SHALL BE MADE
WITHOUT CODE 2370 APPROVAL

DRAWING NO. 2370-1831

TITLE RAE BRIDGE (DD5)

SCALE N/A | Sheet 16 of 21 | REV. ORIG

SHEET 15 | REV. ORIG | TITLE RAE BRIDGE (DD5) | DWG. NO. 2370-1831

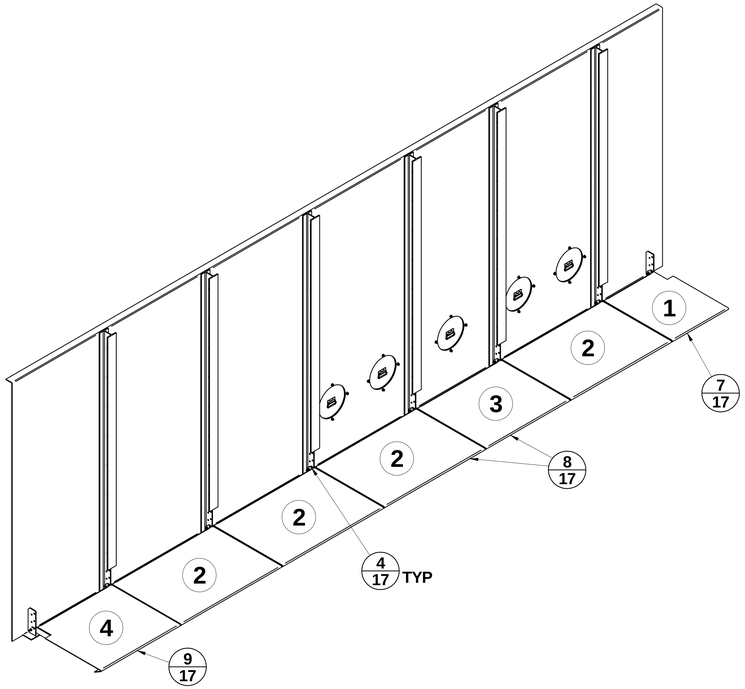

5/17 PORT SIDE PLATFORM PANELS

STARBOARD SIDE PANELS AND PLATFORM MIRROR THE PORT SIDE

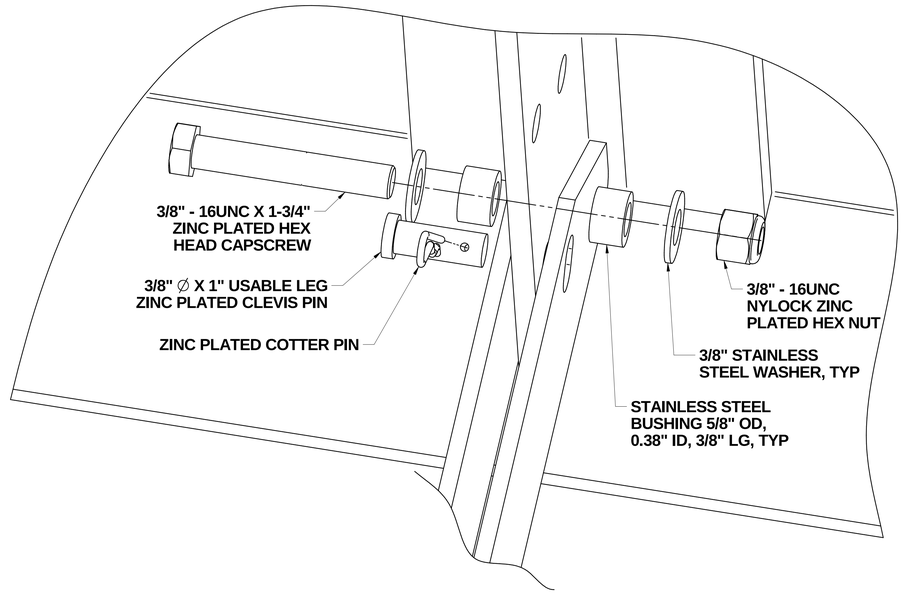

4/17 PLATFORM HINGE ASSEMBLY

CONNECTION TO GUSSET PLATE SIMILAR

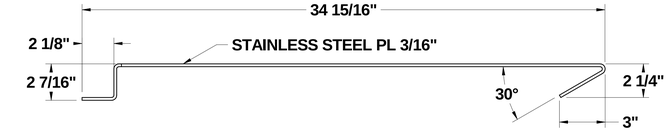

1/17 PLATFORM PANEL SIDE VIEW

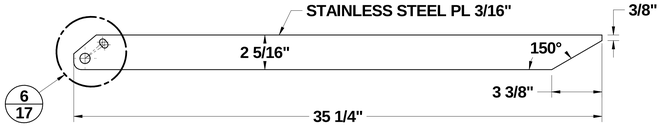

2/17 PANEL EDGE STIFFENER

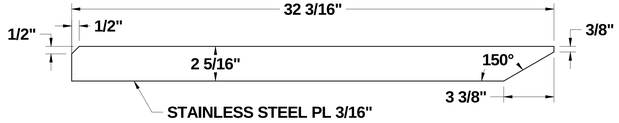

3/17 PANEL MIDDLE STIFFENER

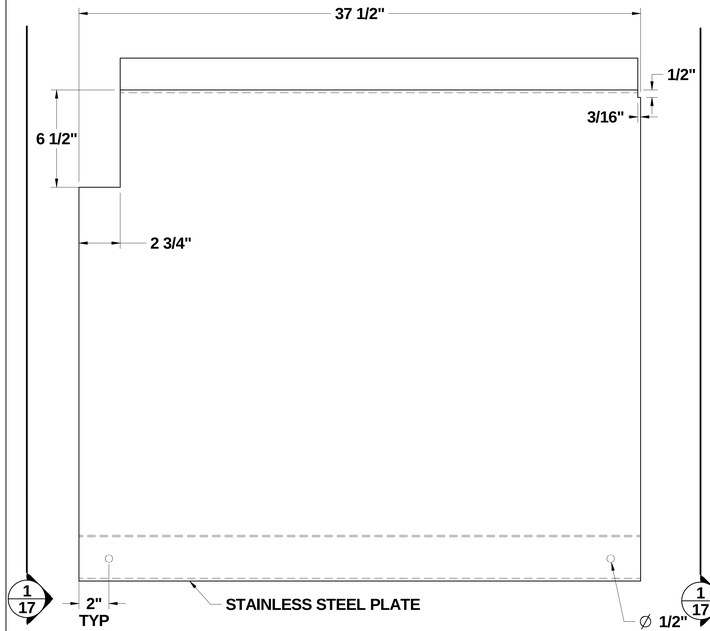

9/17 PLATFORM PANEL 4 DIMENSIONS

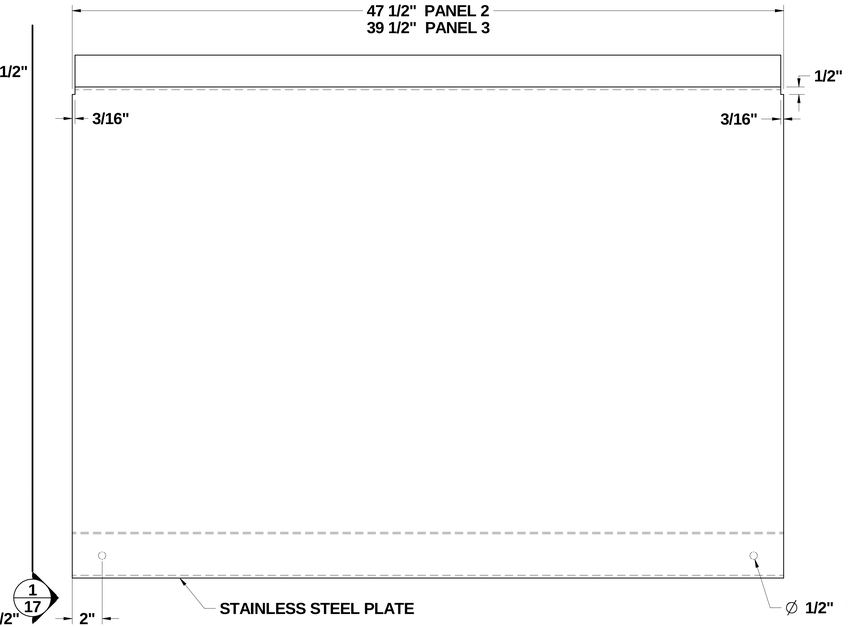

8/17 PLATFORM PANEL 2 & 3 DIMENSIONS

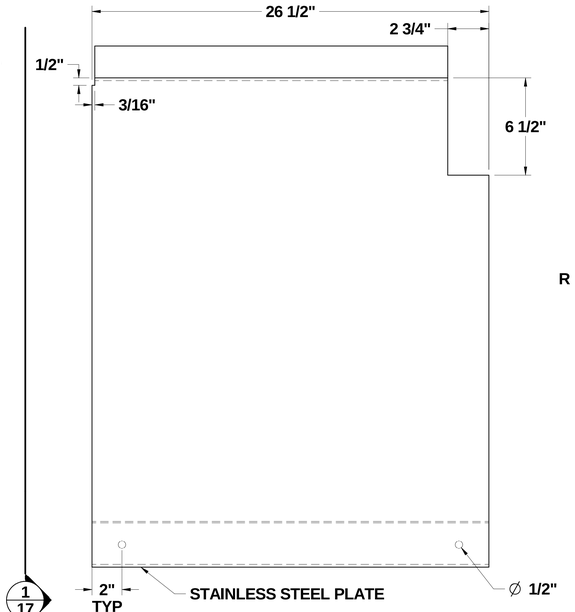

7/17 PLATFORM PANEL 1 DIMENSIONS

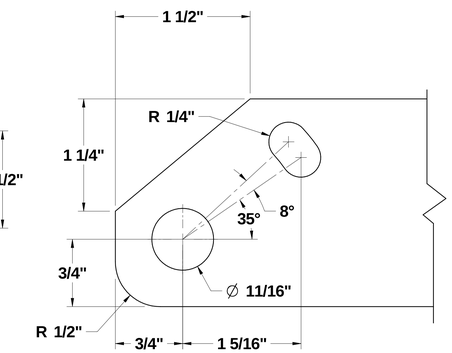

6/17 ENLARGED DETAIL

PUGET SOUND NAVAL SHIPYARD CODE 2370 ENGINEERING DIVISION	
NO DEVIATIONS SHALL BE MADE WITHOUT CODE 2370 APPROVAL	
DRAWING NO. 2370-1831	
TITLE RAE BRIDGE (DD5)	
SCALE N/A	Sheet 17 of 21	REV. ORIG

TITLE RAE BRIDGE (DD5) REV. ORIG SHEET 16 DWG. NO. 2370-1831

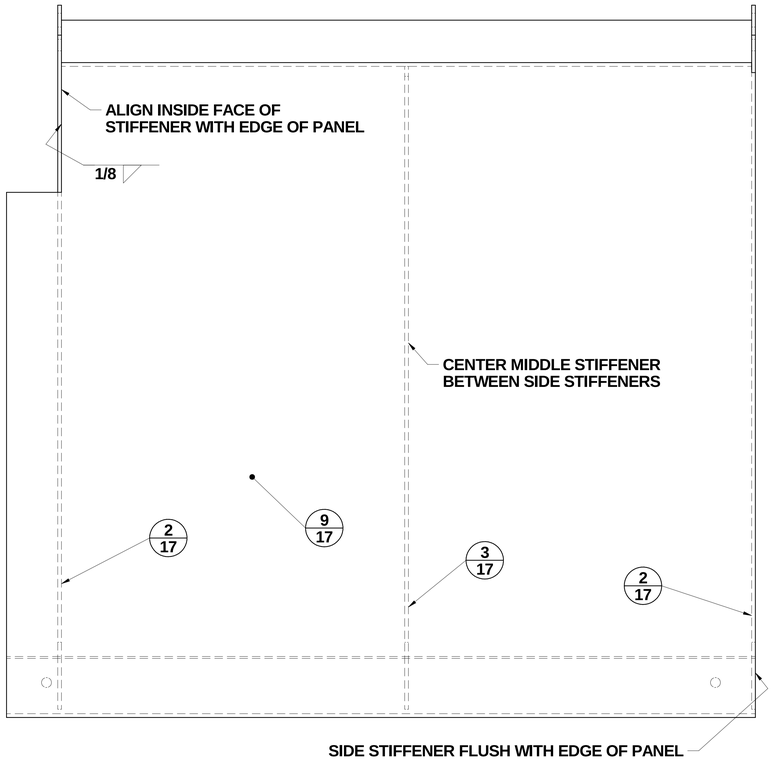

3/18 PANEL 4 STIFFENER LAYOUT

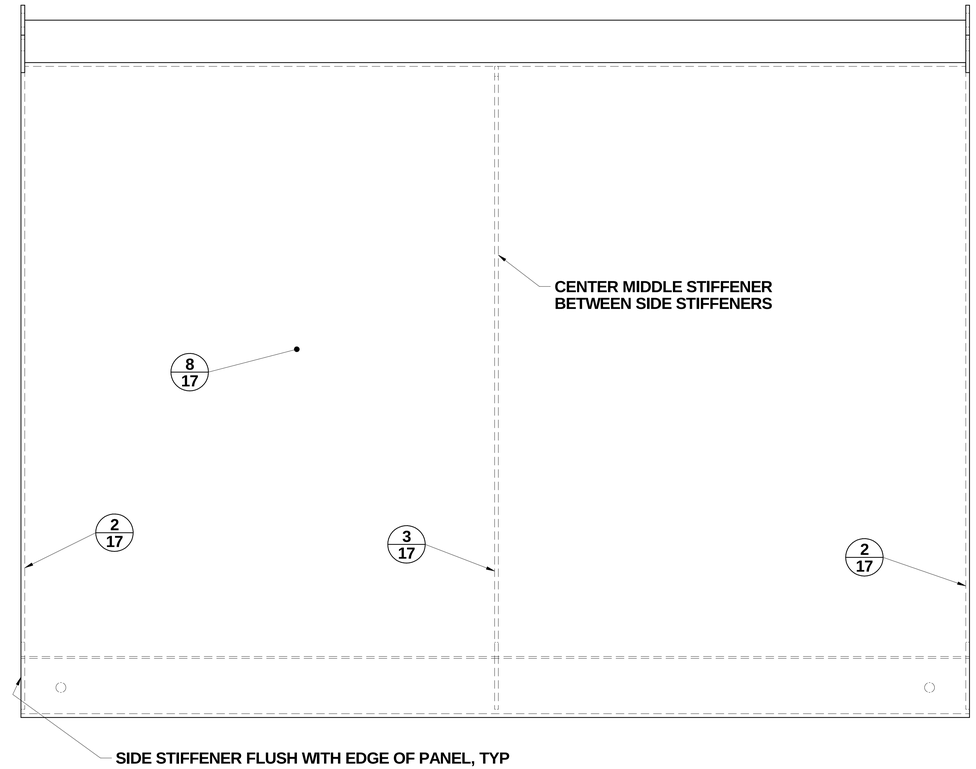

2/18 PANEL 2 & 3 STIFFENER LAYOUT

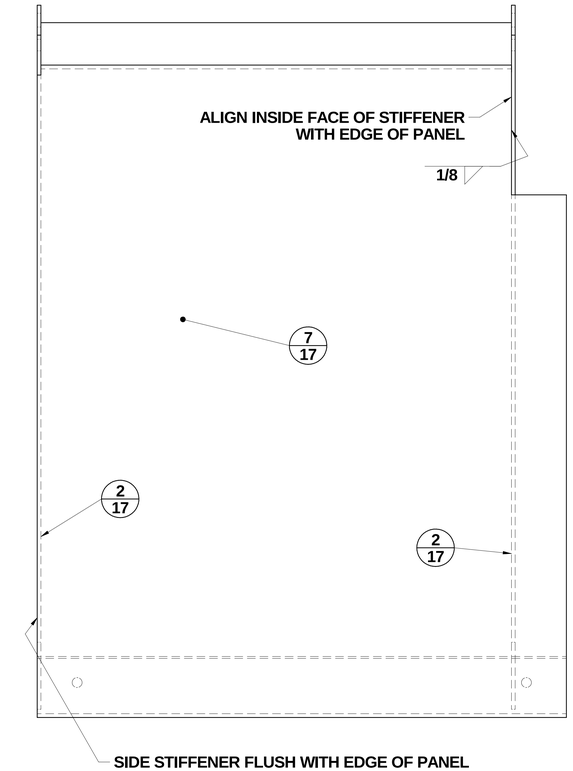

1/18 PANEL 1 STIFFENER LAYOUT

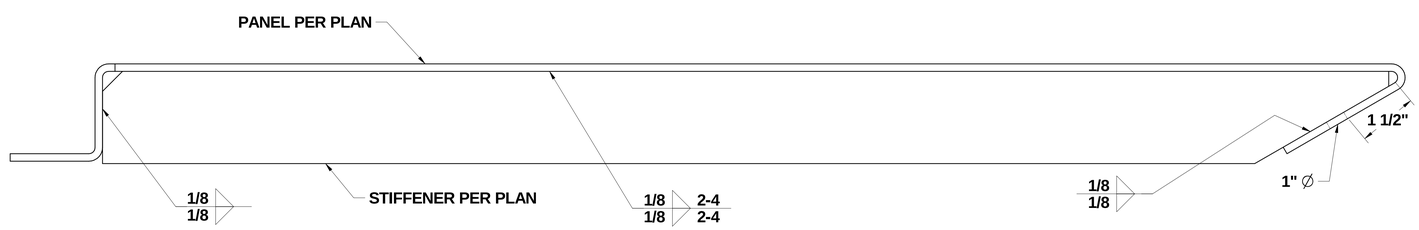

4/18 MIDDLE STIFFENER PANEL CONNECTION

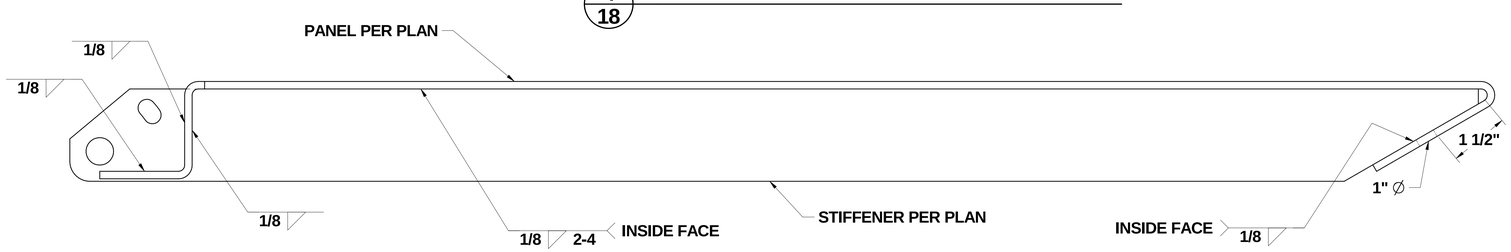

5/18 SIDE PANEL STIFFENER CONNECTION

PUGET SOUND NAVAL SHIPYARD
CODE 2370
ENGINEERING DIVISION

NO DEVIATIONS SHALL BE MADE
WITHOUT CODE 2370 APPROVAL

DRAWING NO. 2370-1831

TITLE **RAE BRIDGE (DD5)**

SCALE N/A | **Sheet 18 of 21** | REV. **ORIG**

SHEET 17 | REV. ORIG | TITLE RAE BRIDGE (DD5) | DWG. NO. 2370-1831

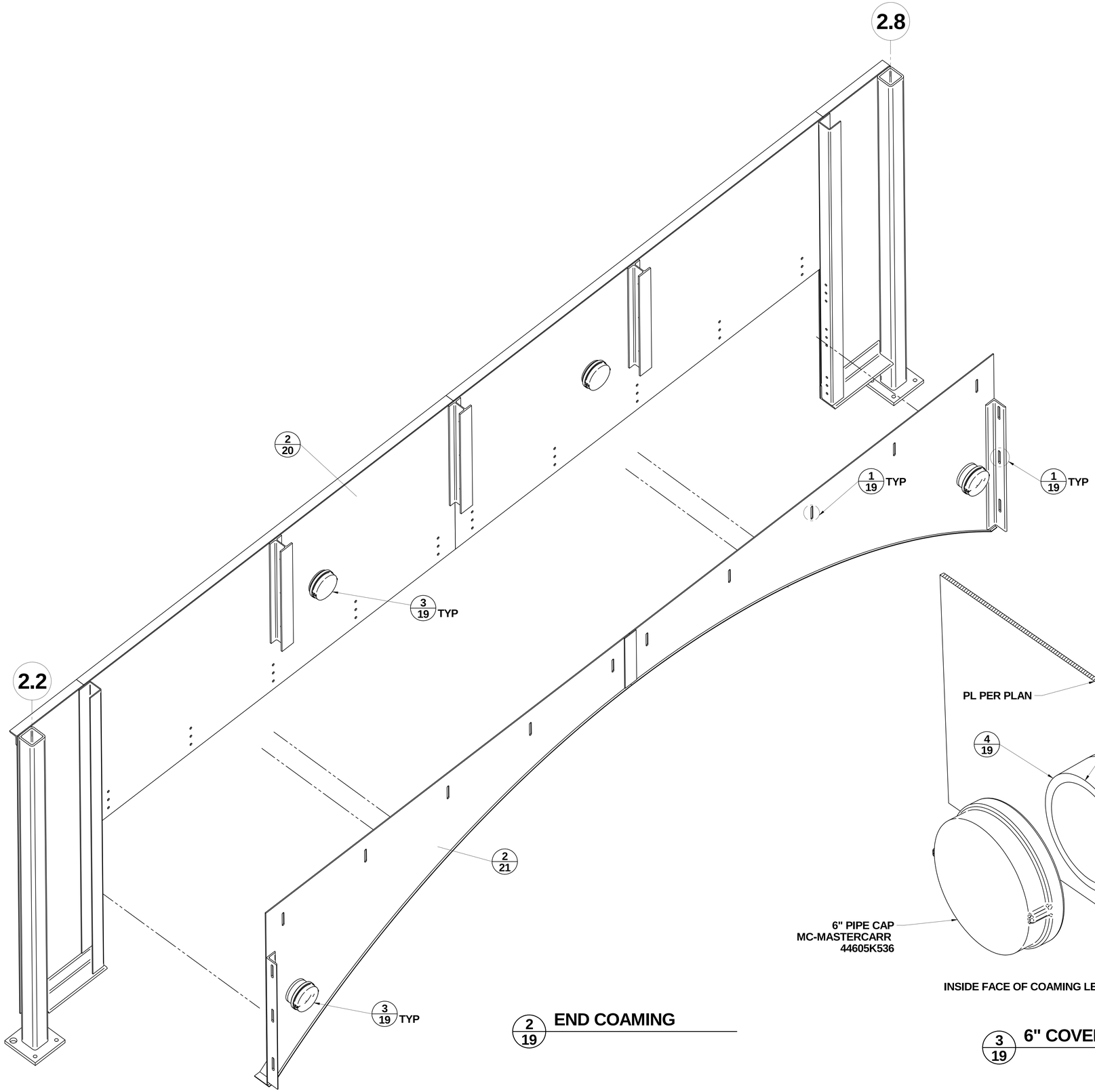

2/19 END COAMING

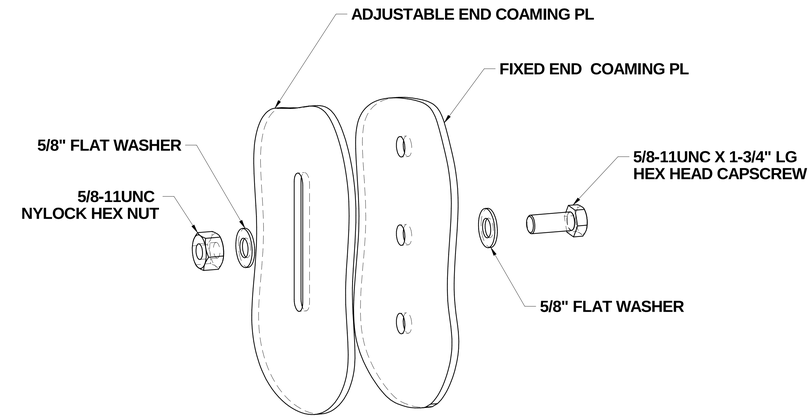

1/19 CONNECTION DETAIL

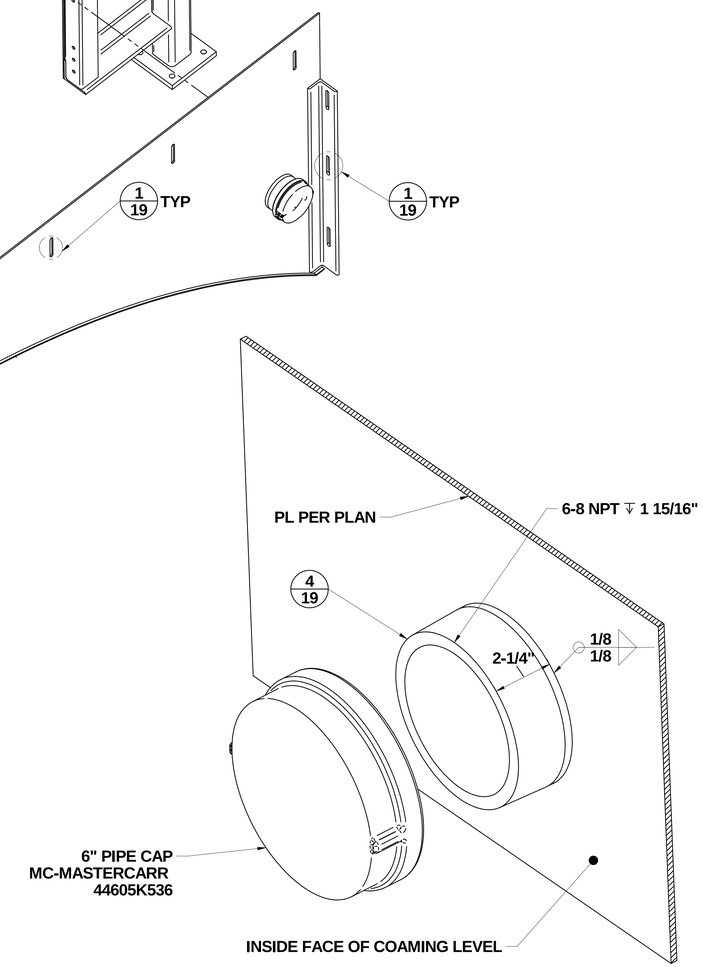

3/19 6" COVER ASSEMBLY

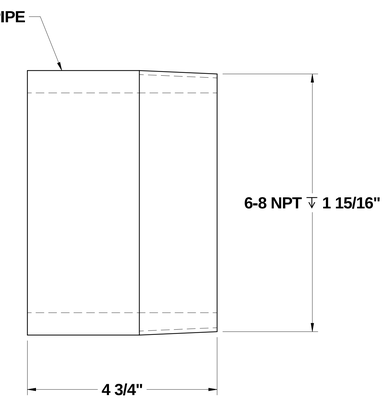

4/19 6" PIPE

PUGET SOUND NAVAL SHIPYARD
CODE 2370
ENGINEERING DIVISION

NO DEVIATIONS SHALL BE MADE
WITHOUT CODE 2370 APPROVAL

DRAWING NO. 2370-1831

TITLE **RAE BRIDGE (DD5)**

SCALE N/A | **Sheet 19 of 21** | REV. **ORIG**

SHEET 18 | REV. ORIG | TITLE RAE BRIDGE (DD5) | DWG. NO. 2370-1831

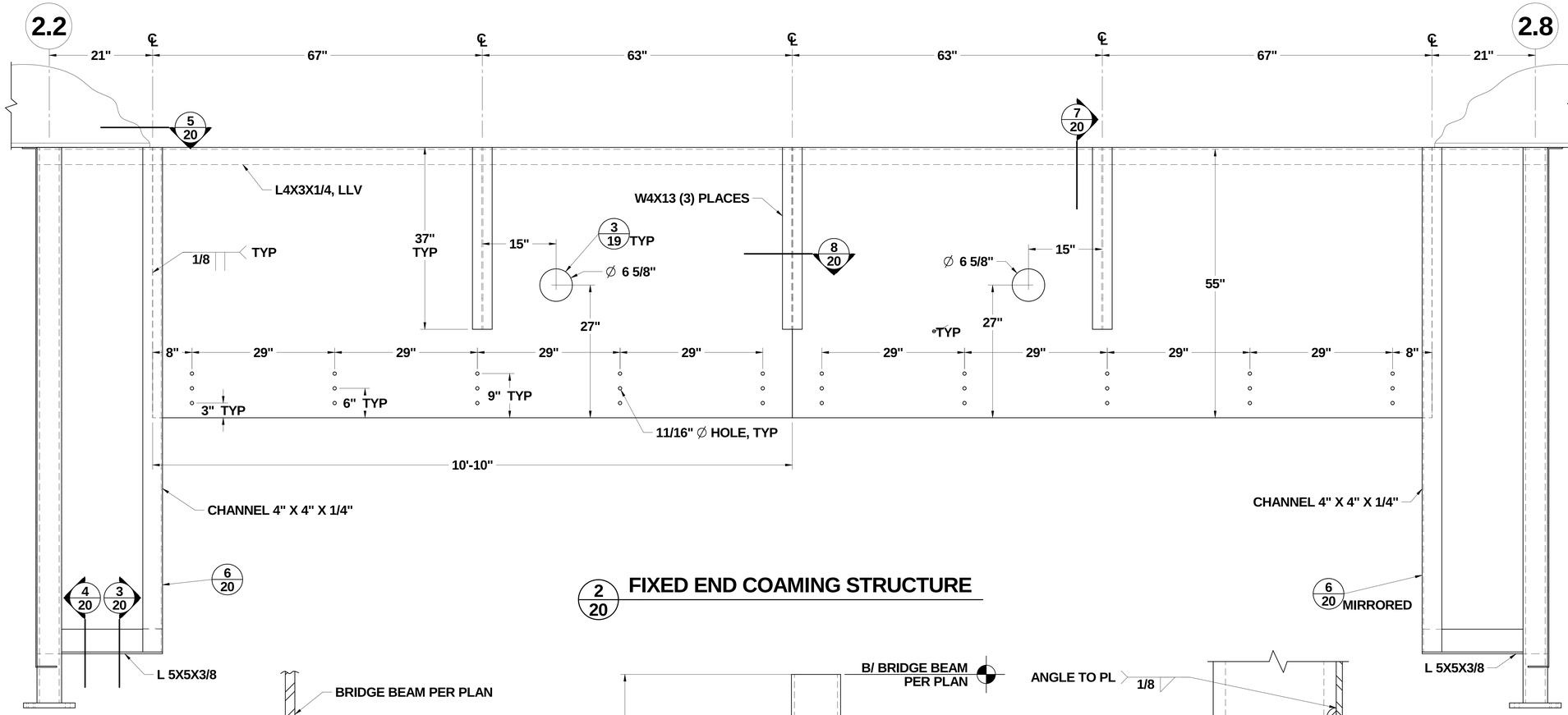

2/20 FIXED END COAMING STRUCTURE

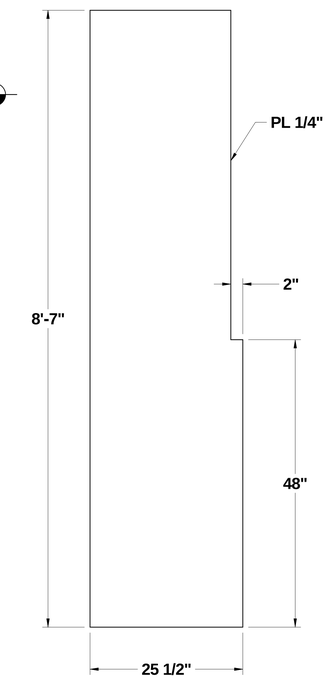

1/20 LEFT-HAND PANEL END COAMING

RIGHT-HAND PANEL END COAMING OPPOSITE

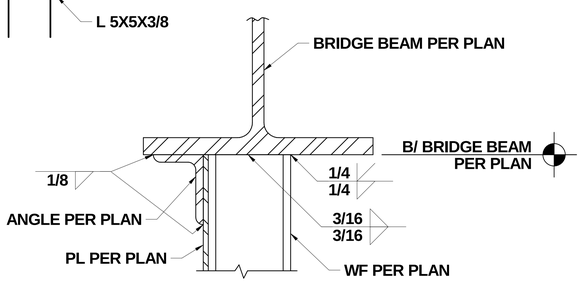

7/20 WF TO BRIDGE BEAM CONNECTION

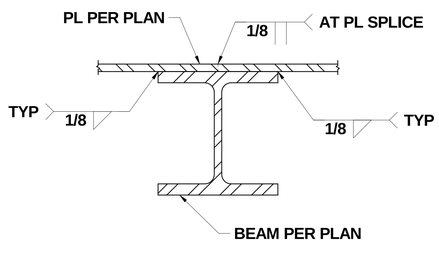

8/20 WF STIFFENER DETAIL

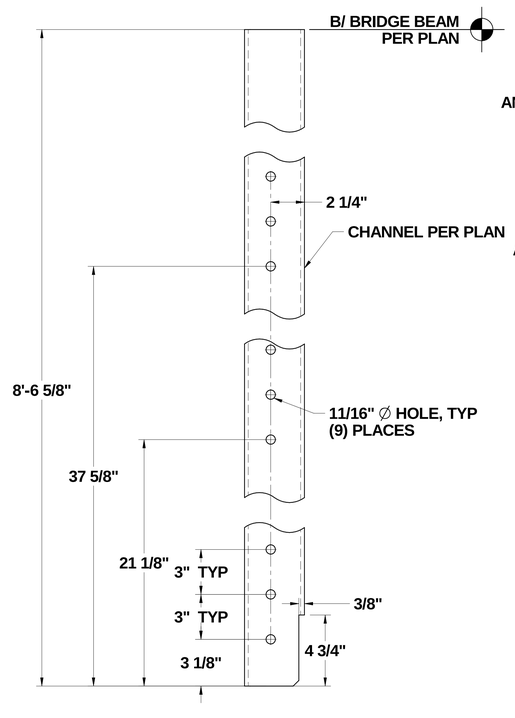

6/20 CHANNEL STIFFENER DETAIL

LEFT SHOWN, RIGHT MIRRORED

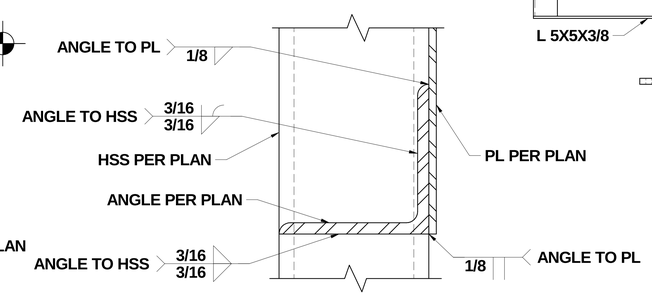

4/20 ANGLE TO HSS DETAIL

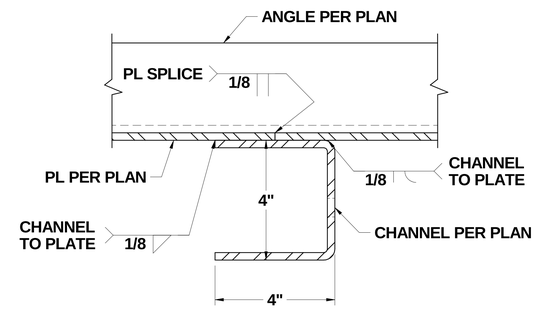

5/20 CHANNEL TO PLATE DETAIL

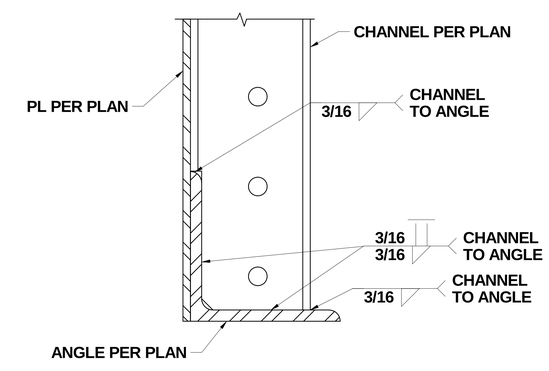

3/20 CHANNEL TO ANGLE DETAIL

PUGET SOUND NAVAL SHIPYARD
CODE 2370
ENGINEERING DIVISION

NO DEVIATIONS SHALL BE MADE
WITHOUT CODE 2370 APPROVAL

DRAWING NO. 2370-1831

TITLE RAE BRIDGE (DD5)

SCALE N/A | Sheet 20 of 21 | REV. ORIG

DWG. NO. 2370-1831 | TITLE RAE BRIDGE (DD5) | REV. ORIG | SHEET 19

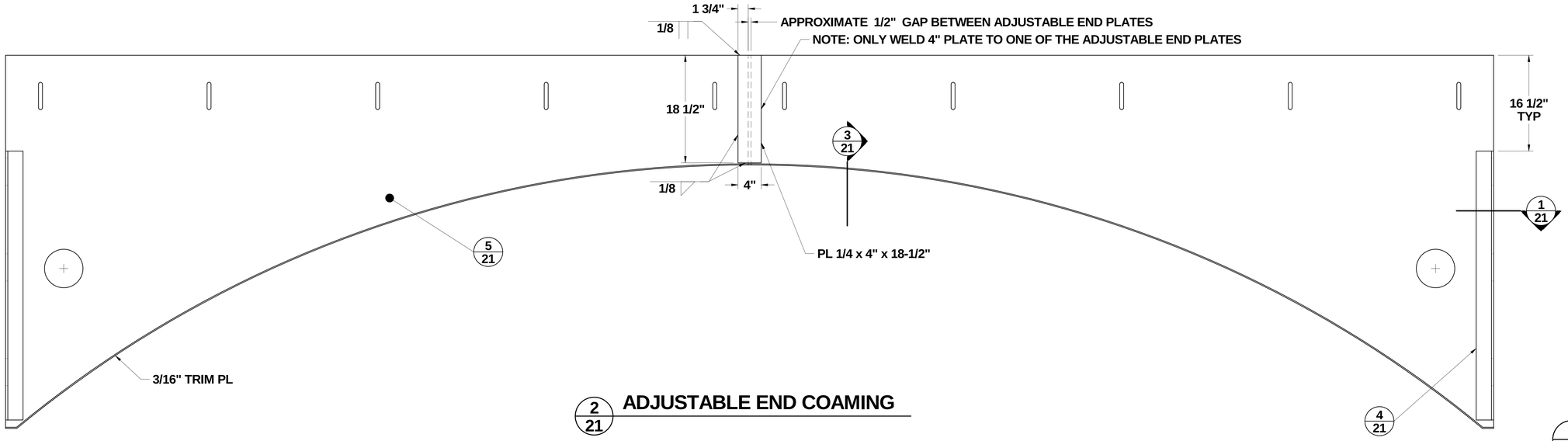

2/21 ADJUSTABLE END COAMING

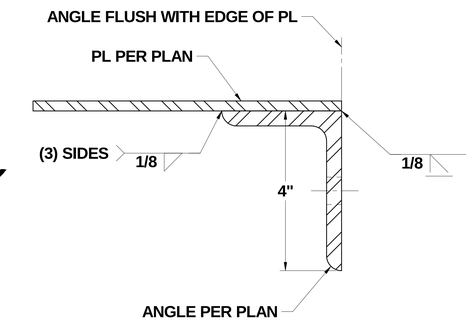

1/21 ANGLE TO PLATE CONNECTION

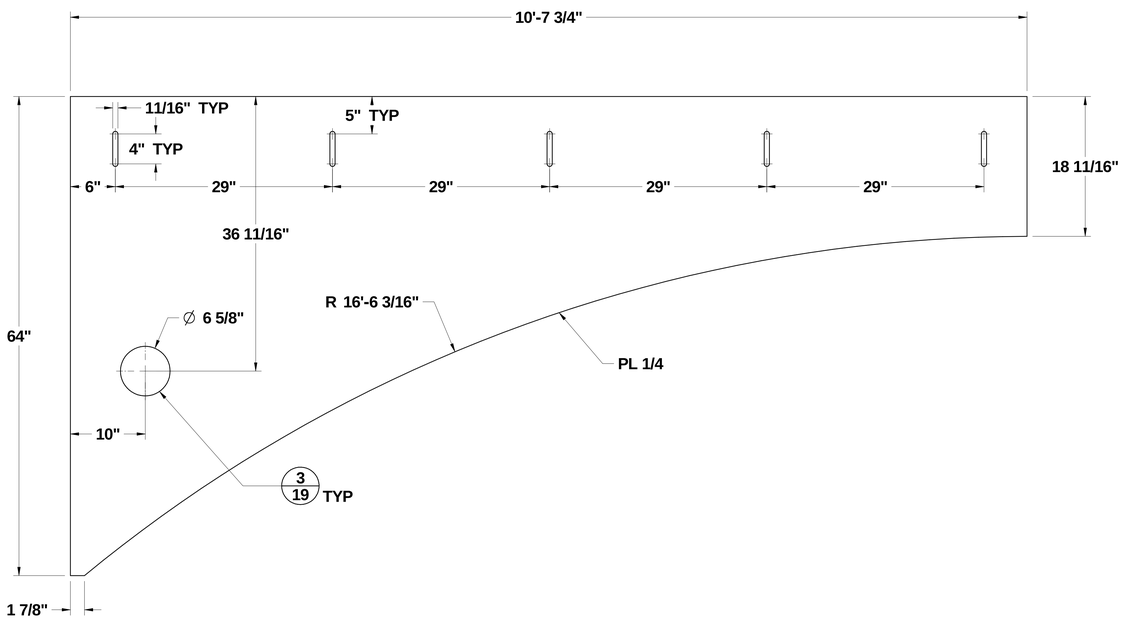

5/21 ADJUSTABLE END PLATE

LEFT PLATE SHOWN, RIGHT PLATE MIRRORED

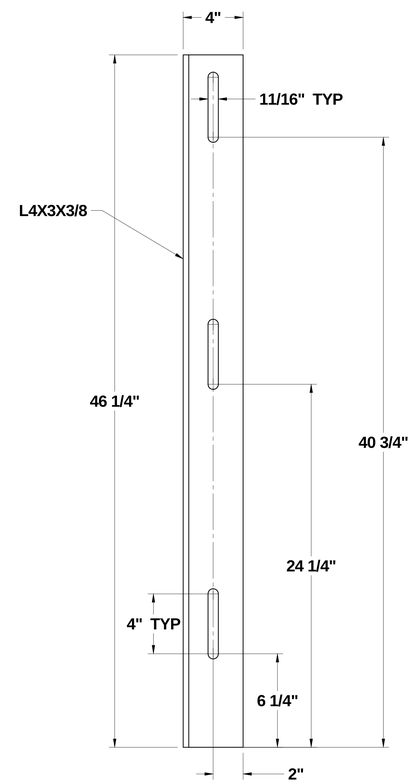

4/21 ADJUSTABLE MATING ANGLE

RIGHT ANGLE SHOWN, LEFT ANGLE MIRRORED

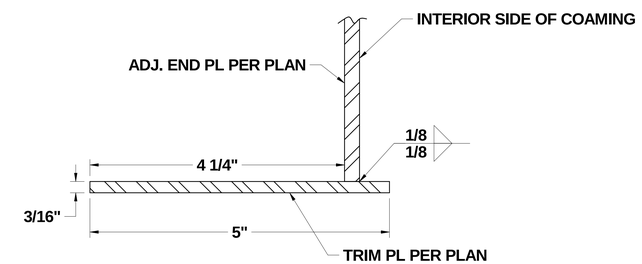

3/21 PLATE TO END PLATE DETAIL

PUGET SOUND NAVAL SHIPYARD
CODE 2370
ENGINEERING DIVISION

NO DEVIATIONS SHALL BE MADE
WITHOUT CODE 2370 APPROVAL

DRAWING NO. 2370-1831

TITLE **RAE BRIDGE (DD5)**

SCALE N/A | Sheet 21 of 21 | REV. ORIG

TITLE RAE BRIDGE (DD5)
REV. ORIG
SHEET 20
DWG. NO. 2370-1831

GENERAL NOTES

1. DRAWING PSNS 2370-1835 PROVIDES GENERAL NOTES AND SPECIFICATIONS TO BE USED WITH PSNS DWG 2370-1830, PSNS DWG 2370-1831, PSNS DWG 2370-1832, AND PSNS DWG 2370-1833.
2. THE FOLLOWING DRAWINGS ARE TO BE UTILIZED TO INSTALL THE RAE SUPPORT SYSTEM AT DRY DOCK 1: PSNS DRAWING 2370-1830 RAE BRIDGE, PSNS DRAWING 2370-1832 RAE TOWERS, PSNS DRAWING 2370-1834 RAE TOWER / RAE BRIDGE BEARING, AND PSNS DRAWING 2370-1835 RAE SUPPORT TOWER AND BRIDGE STRUCTURAL REQUIREMENTS.
3. INFORMATION SPECIFIC TO THE FABRICATION OF THE TOWER LIFTING LUGS IS PROVIDED ON SHEET 25.
4. SFRS INDICATES A WELD ON THE SEISMIC FORCE RESISTING SYSTEM THAT IS NOT DEMAND CRITICAL.
5. SFRS-DC INDICATES A WELD ON THE SEISMIC FORCE RESISTING SYSTEM THAT IS DEMAND CRITICAL.
6. WITH THIS DRAWING A SET OF TOWERS SHALL BE CONSTRUCTED; AN EAST TOWER AND A WEST TOWER.
7. THE WEST TOWER IS A MIRROR COPY OF THE EAST TOWER, FOR INFORMATION NOT SHOWN ON THE WEST TOWER, REFERENCE THE EAST TOWER.
8. FOR EACH TOWER, THE FOLLOWING CONNECTIONS SHALL BE FABRICATED PER DRAWING 2370-1834:
   - **A.** BEARING ARRANGEMENT 1: QUANTITY (4)
   - **B.** BEARING ARRANGEMENT 2: QUANTITY (2)

SYMBOL LEGEND

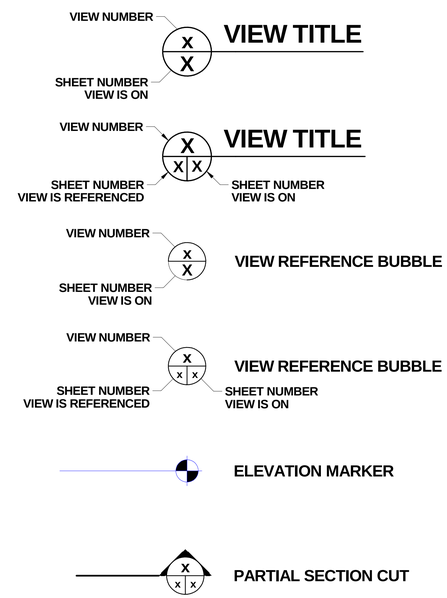

REVISIONS					
SYMB	REV	DESCRIPTION	DATE	CHANGE BY	APPROVAL
A	A				
B	B				
C	C				
D	D				

ABBREVIATIONS

ADJ	- ADJUSTABLE	MIN	- MINIMUM
B/	- BOTTOM OF	O.C.	- ON CENTER
BP	- BASE PLATE	PL	- PLATE
BRB	- BUCKLING RESTRAINED BRACE	REQ'D	- REQUIRED
CJP	- COMPLETE JOINT PENETRATION	SC	- SLIP CRITICAL
CL OR ℄	- CENTERLINE	SCH	- SCHEDULE
COL	- COLUMN	SFRS	- SEISMIC FORCE RESISTING SYSTEM
DC	- DEMAND CRITICAL	SFRS-DC	- SEISMIC FORCE RESISTING SYSTEM, DEMAND CRITICAL
ELEV	- ELEVATION	SIM	- SIMILAR
EL	- ELEVATION	SST	- STAINLESS STEEL
GA.	- GAUGE	STL	- STEEL
HORIZ	- HORIZONTAL	T&B	- TOP AND BOTTOM
ISO	- ISOMETRIC	T/	- TOP OF
MAX	- MAXIMUM	TYP	- TYPICAL
MFR	- MANUFACTURER	UNO	- UNLESS NOTED OTHERWISE

DISTRIBUTION STATEMENT: N/A

A.D.C. REVIEW

	SIGNATURE	DATE
	J. BYRNES /S/	**11/12/14**

CONCURRENCE

CODE	SIGNATURE	DATE

/S/ SIGNATURE ON FILE **APPROVAL**

	SIGNATURE	DATE
BRANCH SUPV.	**J. BYRNES /S/**	**11/12/14**
CHECKED	**K. BOTTELBERGHE /S/**	**11/12/14**
DRAWN	**B. MEACHAM /S/**	**11/12/14**
DRAWN		
DESIGNED		
FILE PATH		

PUGET SOUND NAVAL SHIPYARD
CODE 2370
ENGINEERING DIVISION

NO DEVIATIONS SHALL BE MADE
WITHOUT CODE 2370 APPROVAL

DRAWING NO. **2370 - 1832**

TITLE **RAE SUPPORT TOWERS (DD1)**

SCALE N/A | **SHEET 1 of 28** | REV. **ORIG**

SHEET 1 | REV. ORIG | TITLE DD1 RAE SUPPORT TOWERS | DWG. NO. 2370 - 1832

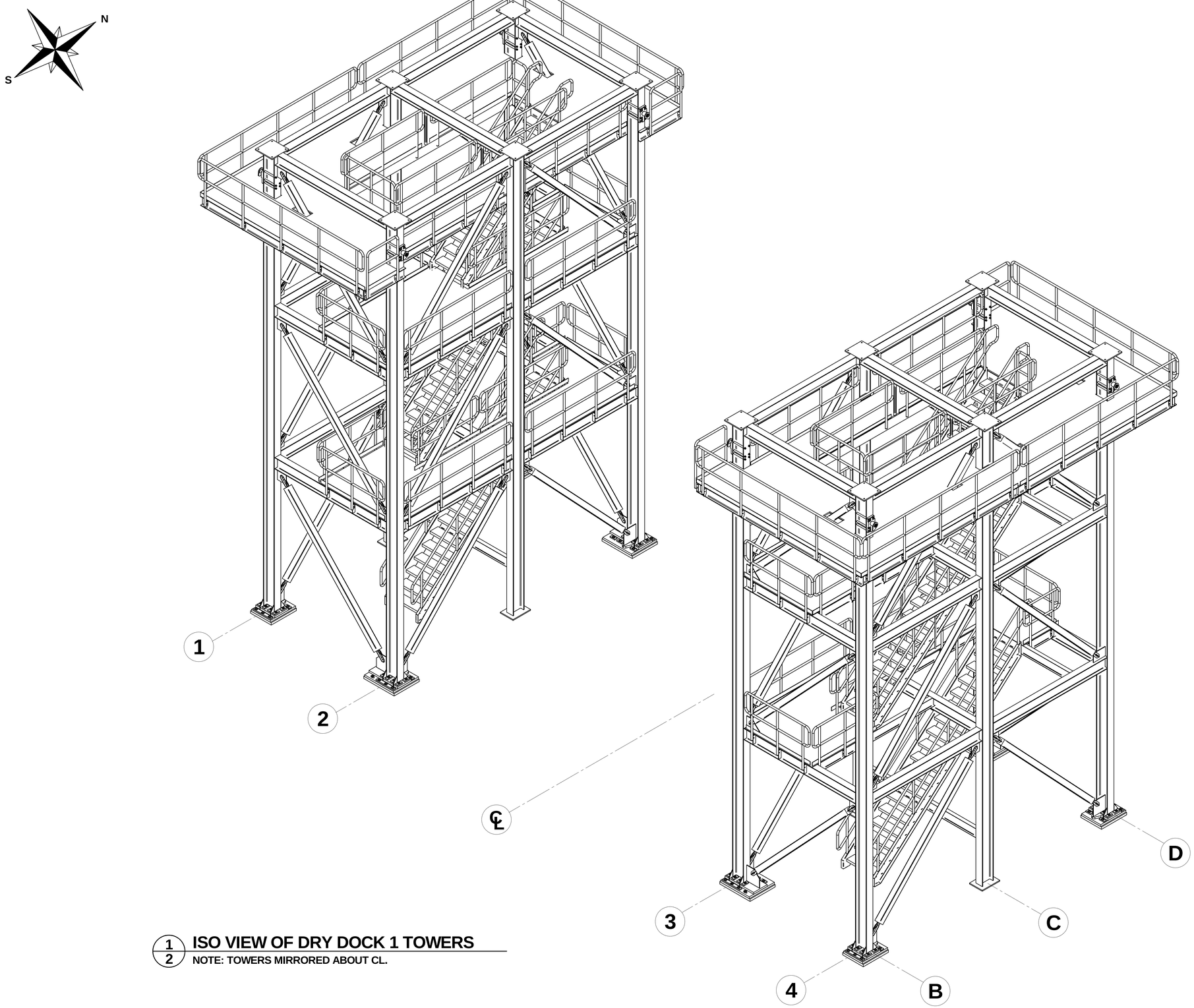

1/2 **ISO VIEW OF DRY DOCK 1 TOWERS**

NOTE: TOWERS MIRRORED ABOUT CL.

PUGET SOUND NAVAL SHIPYARD
CODE 2370
ENGINEERING DIVISION

NO DEVIATIONS SHALL BE MADE
WITHOUT CODE 2370 APPROVAL

DRAWING NO. **2370 - 1832**

TITLE **RAE SUPPORT TOWERS (DD1)**

SCALE N/A | **SHEET 2 of 28** | REV. **ORIG**

TITLE **DD1 RAE SUPPORT TOWERS**

REV. ORIG | SHEET 2

DWG. NO. **2370 - 1832**

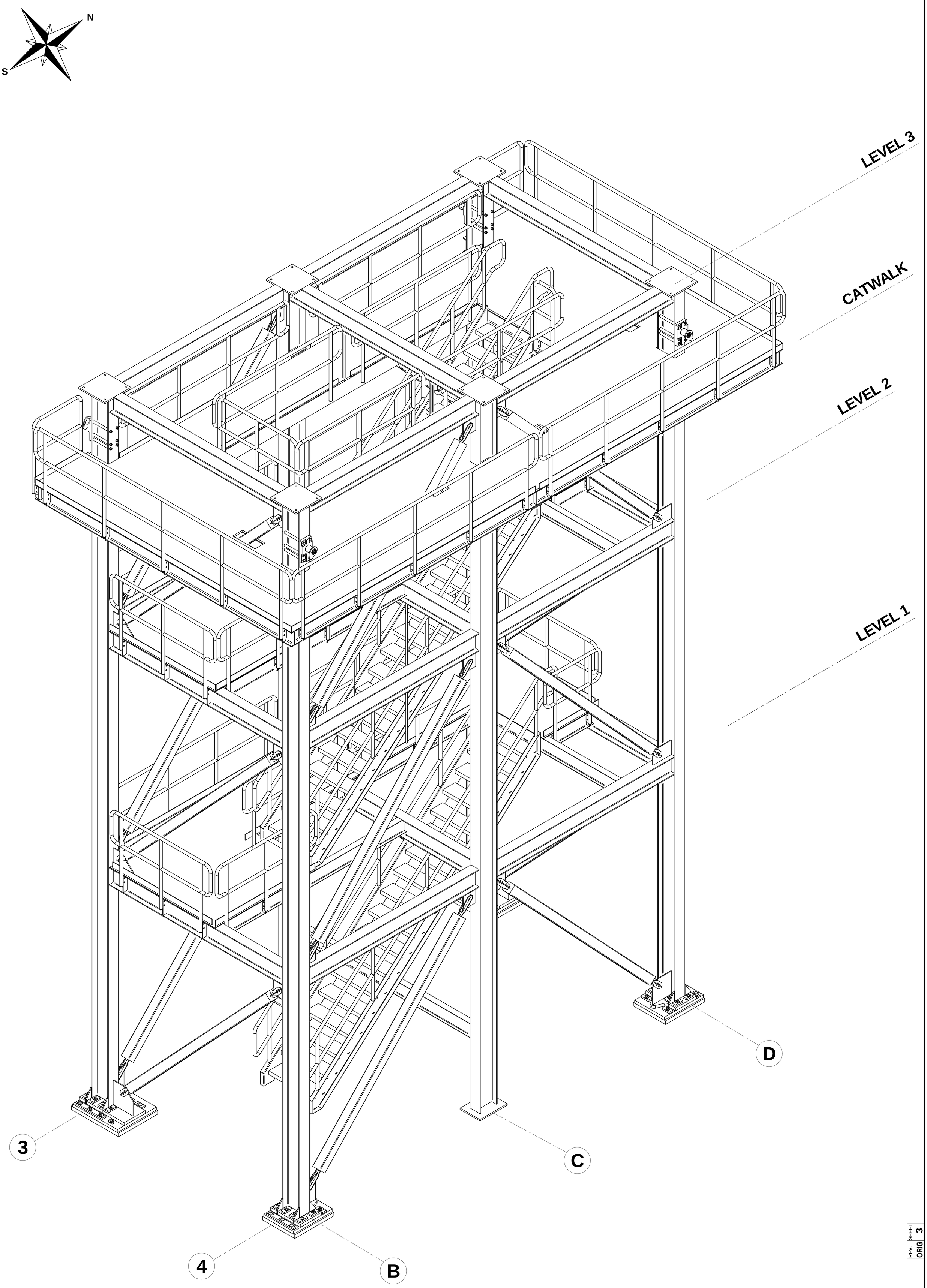

1/3 ISO VIEW OF EAST TOWER

PUGET SOUND NAVAL SHIPYARD
CODE 2370
ENGINEERING DIVISION

NO DEVIATIONS SHALL BE MADE
WITHOUT CODE 2370 APPROVAL

DRAWING NO. **2370 - 1832**

TITLE **RAE SUPPORT TOWERS (DD1)**

SCALE N/A | **SHEET 3 of 28** | REV. **ORIG**

SHEET 3 | REV. ORIG | TITLE DD1 RAE SUPPORT TOWERS | DWG. NO. 2370 - 1832

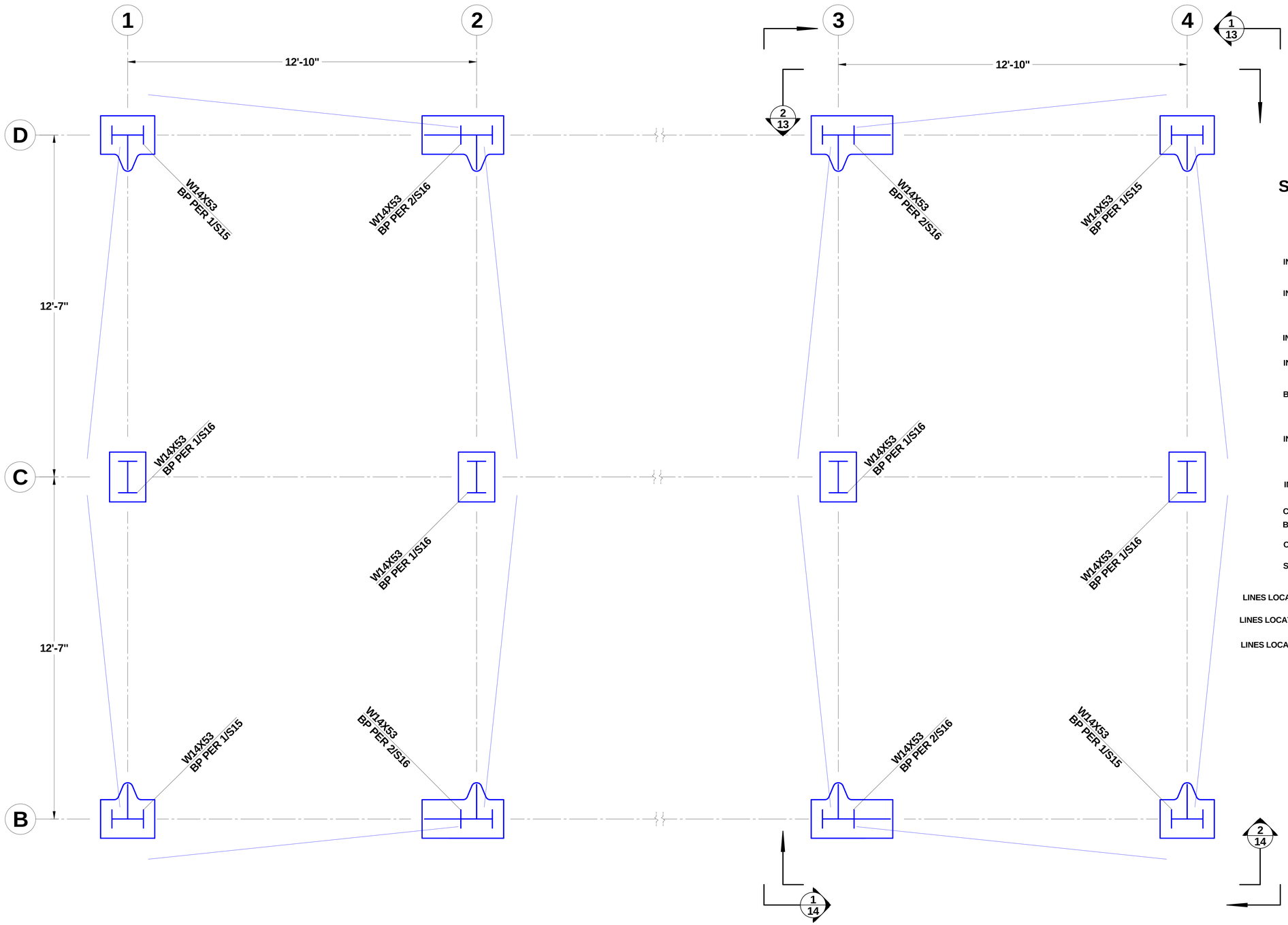

1/4 GROUND LEVEL STRUCTURAL PLAN

B/ BASEPLATE ELEV = 0' - 0"

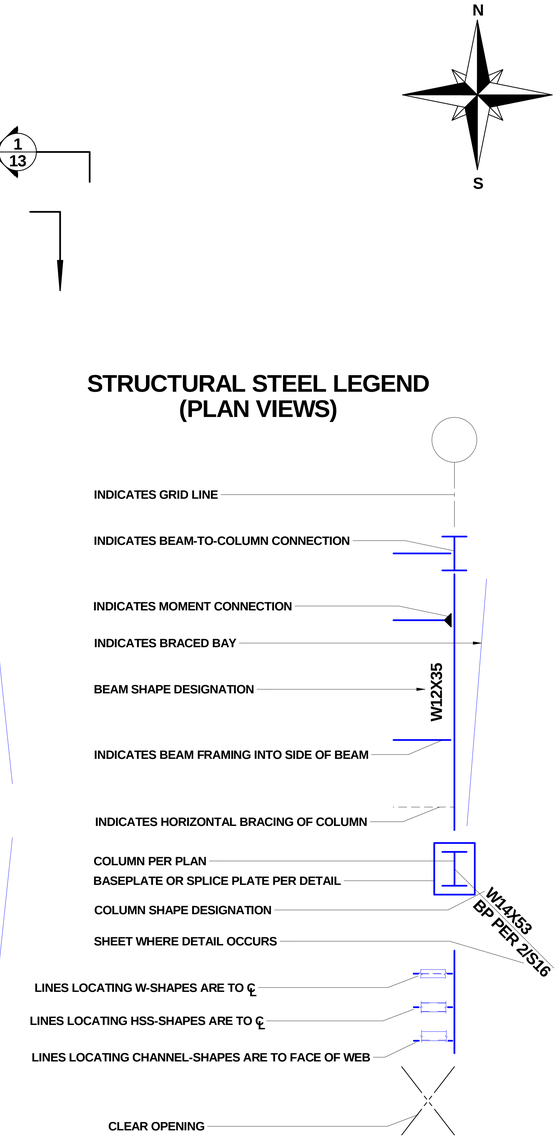

PUGET SOUND NAVAL SHIPYARD
CODE 2370
ENGINEERING DIVISION

NO DEVIATIONS SHALL BE MADE
WITHOUT CODE 2370 APPROVAL

DRAWING NO. **2370 - 1832**

TITLE **RAE SUPPORT TOWERS (DD1)**

SCALE N/A | **SHEET 4 of 28** | REV. **ORIG**

TITLE DD1 RAE SUPPORT TOWERS | REV. ORIG | SHEET 4 | DWG. NO. 2370 - 1832

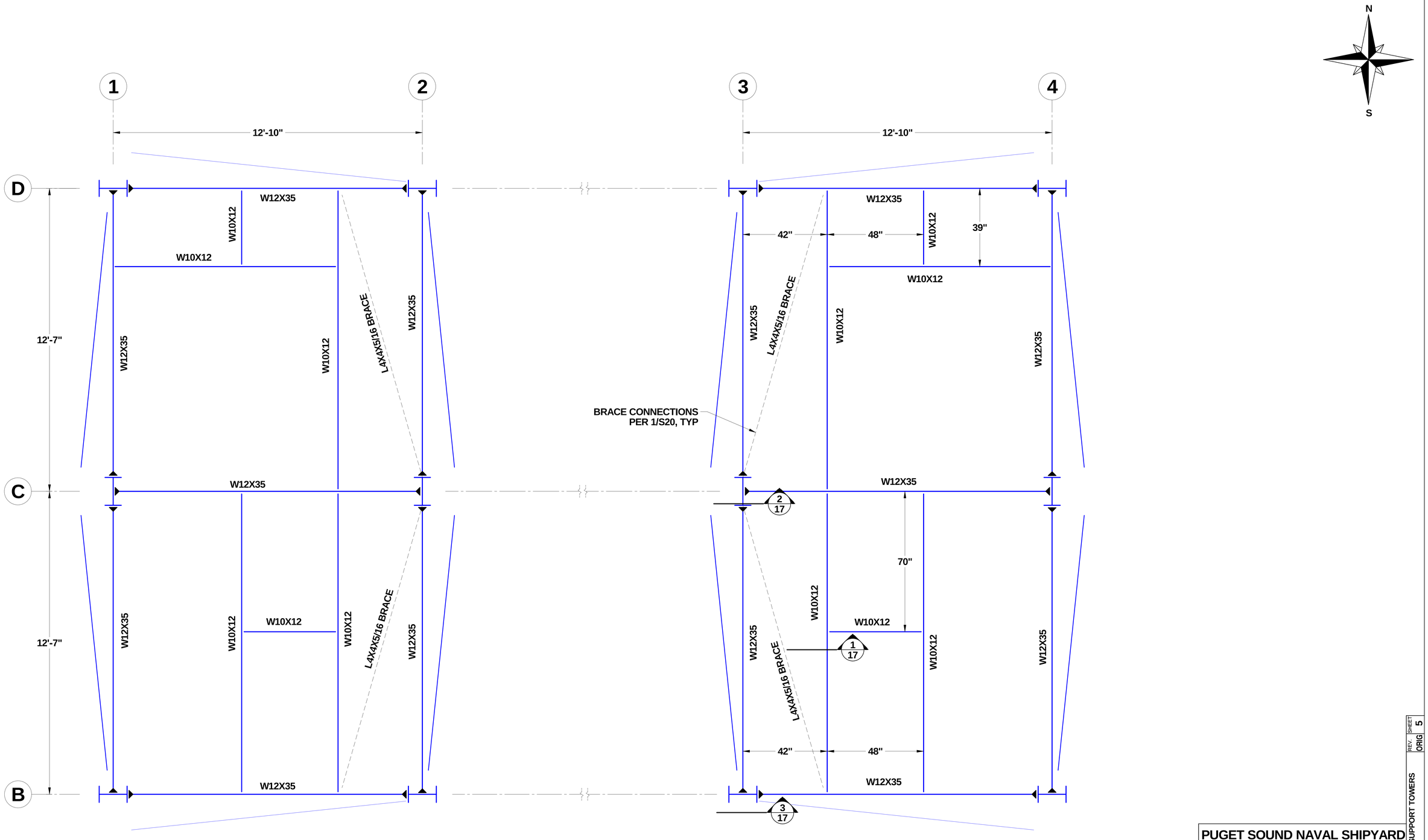

1/5 LEVEL 1 STRUCTURAL PLAN

T/ STEEL EL = 14' - 3"

PUGET SOUND NAVAL SHIPYARD
CODE 2370
ENGINEERING DIVISION

NO DEVIATIONS SHALL BE MADE
WITHOUT CODE 2370 APPROVAL

DRAWING NO. **2370 - 1832**

TITLE **RAE SUPPORT TOWERS (DD1)**

SCALE N/A | **SHEET 5 of 28** | REV. **ORIG**

TITLE DD1 RAE SUPPORT TOWERS | REV. ORIG | SHEET 5

DWG. NO. 2370 - 1832

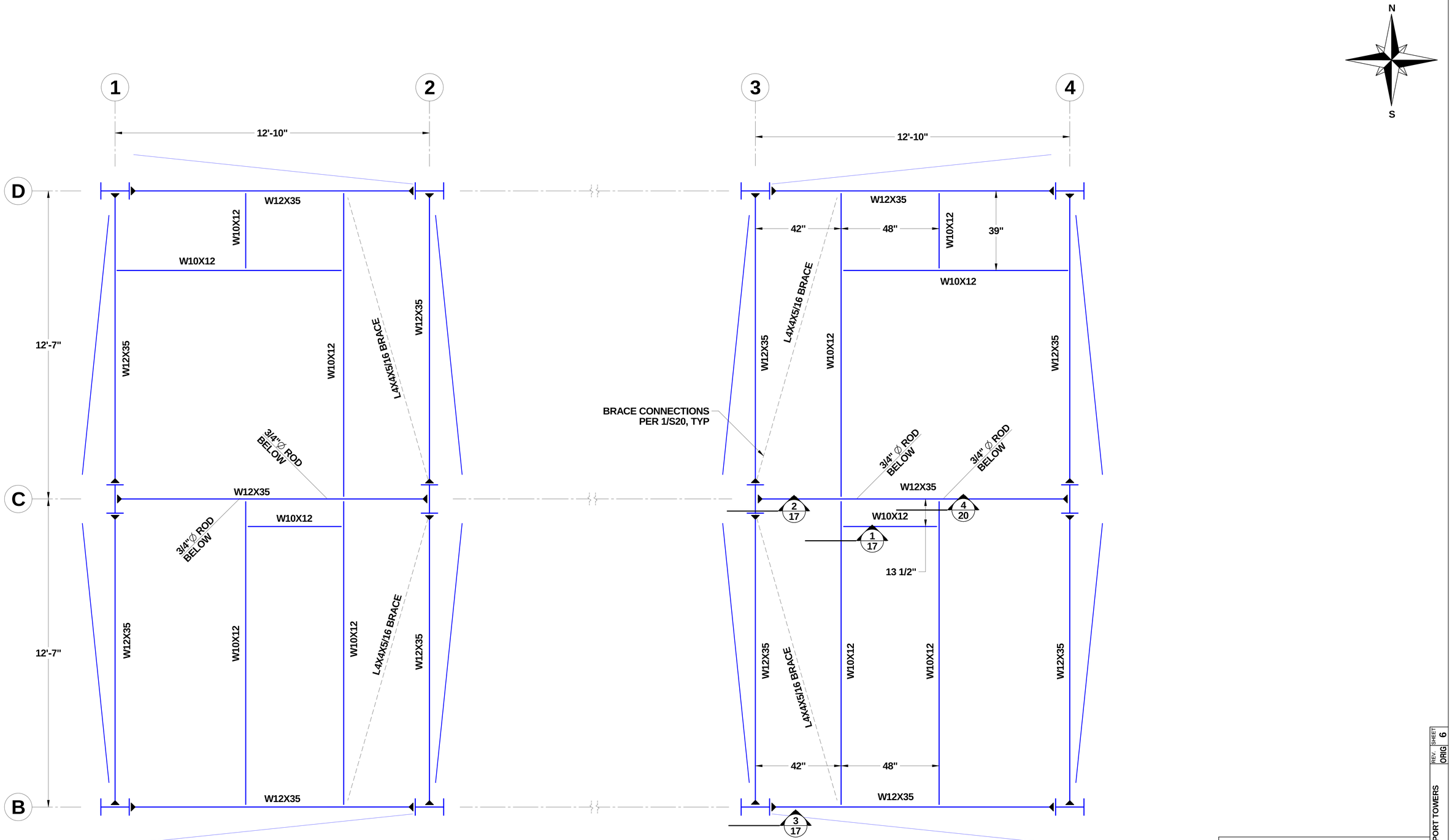

1/6 **LEVEL 2 STRUCTURAL PLAN**

T/ STEEL ELEV = 28' - 0"

PUGET SOUND NAVAL SHIPYARD
CODE 2370
ENGINEERING DIVISION

NO DEVIATIONS SHALL BE MADE
WITHOUT CODE 2370 APPROVAL

DRAWING NO. **2370 - 1832**

TITLE **RAE SUPPORT TOWERS (DD1)**

SCALE N/A | **SHEET 6 of 28** | REV. **ORIG**

TITLE DD1 RAE SUPPORT TOWERS

REV. ORIG SHEET 6

DWG. NO. 2370 - 1832

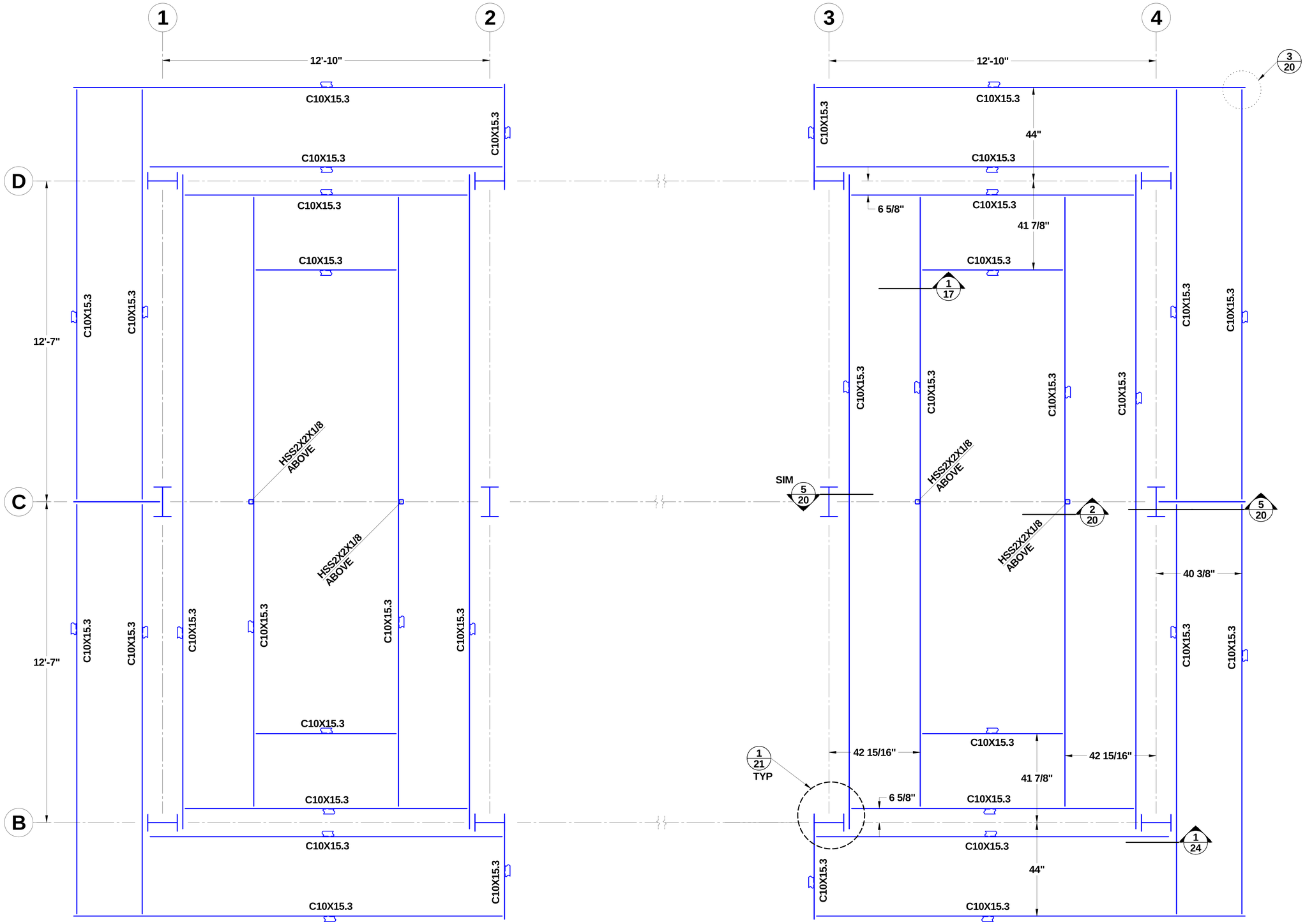

1/7 CATWALK STRUCTURAL PLAN

T/ STEEL ELEV = 37' - 9"

PUGET SOUND NAVAL SHIPYARD
CODE 2370
ENGINEERING DIVISION

NO DEVIATIONS SHALL BE MADE
WITHOUT CODE 2370 APPROVAL

DRAWING NO. 2370 - 1832

TITLE RAE SUPPORT TOWERS (DD1)

SCALE N/A | SHEET 7 of 28 | REV. ORIG

TITLE DD1 RAE SUPPORT TOWERS

REV. ORIG | SHEET 7

DWG. NO. 2370 - 1832

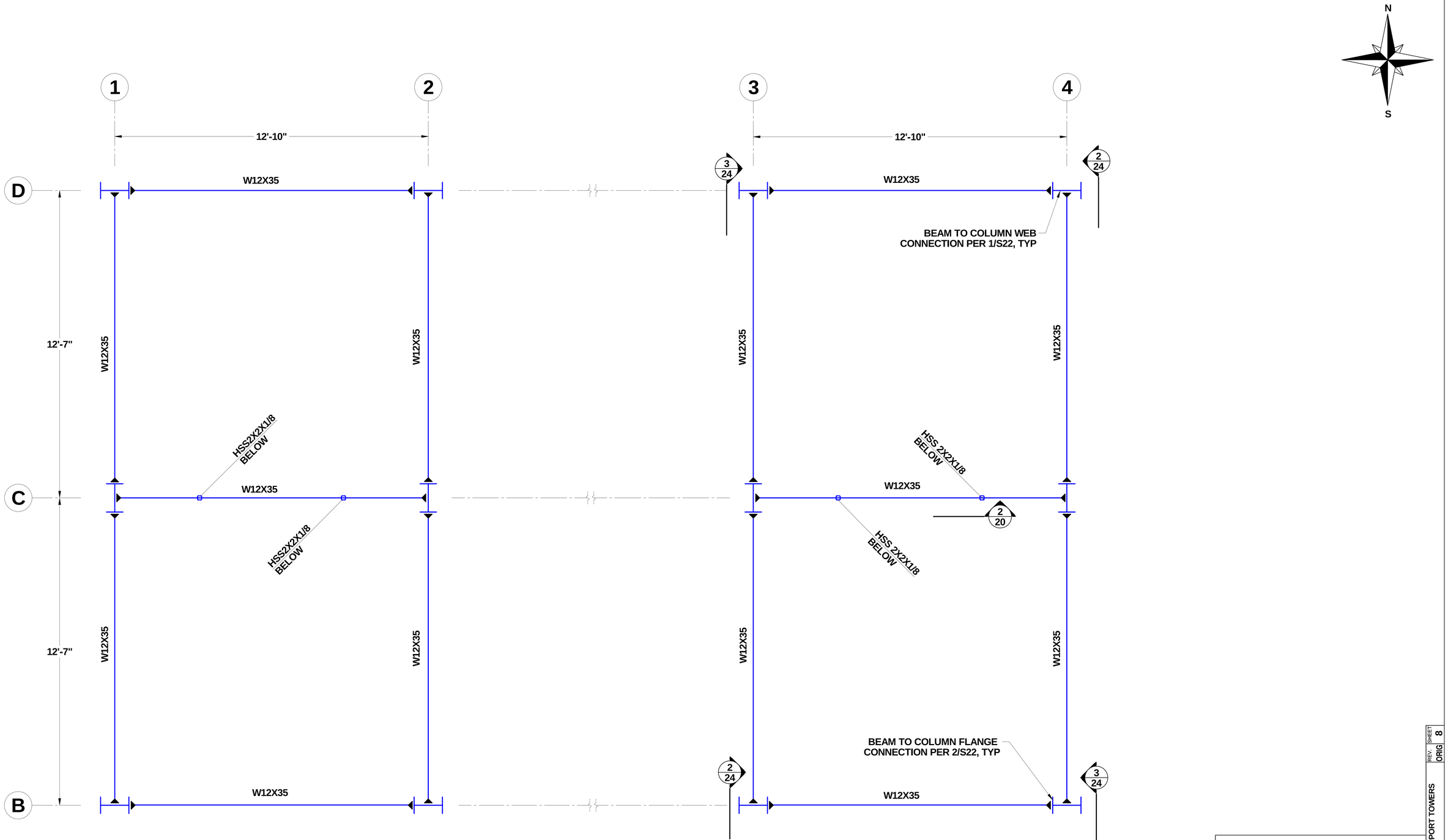

1/8 LEVEL 3 STRUCTURAL PLAN

T/ STEEL ELEV = 41' - 9"

PUGET SOUND NAVAL SHIPYARD
CODE 2370
ENGINEERING DIVISION

NO DEVIATIONS SHALL BE MADE
WITHOUT CODE 2370 APPROVAL

DRAWING NO. **2370 - 1832**

TITLE **RAE SUPPORT TOWERS (DD1)**

SCALE N/A | **SHEET 8 of 28** | REV. **ORIG**

TITLE DD1 RAE SUPPORT TOWERS

REV. ORIG | SHEET 8

DWG. NO. 2370 - 1832

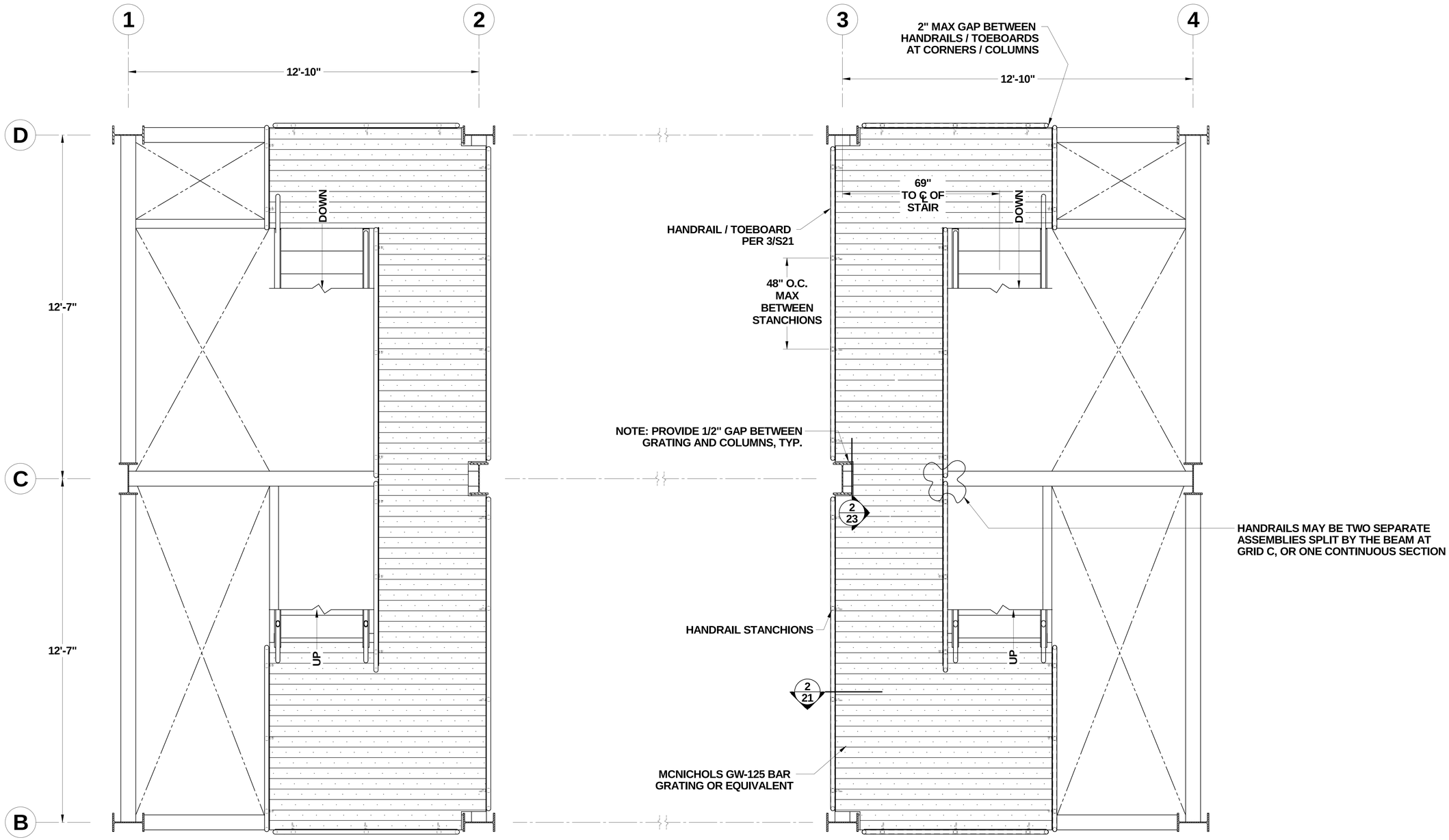

1/9 **LEVEL 1 GRATING PLAN**

INDICATES BEARING BAR ORIENTATION IN E-W DIRECTION

PUGET SOUND NAVAL SHIPYARD
CODE 2370
ENGINEERING DIVISION

NO DEVIATIONS SHALL BE MADE WITHOUT CODE 2370 APPROVAL

DRAWING NO. **2370 - 1832**

TITLE **RAE SUPPORT TOWERS (DD1)**

SCALE N/A | **SHEET 9 of 28** | REV. **ORIG**

TITLE DD1 RAE SUPPORT TOWERS | REV. ORIG | SHEET 9

DWG. NO. 2370 - 1832

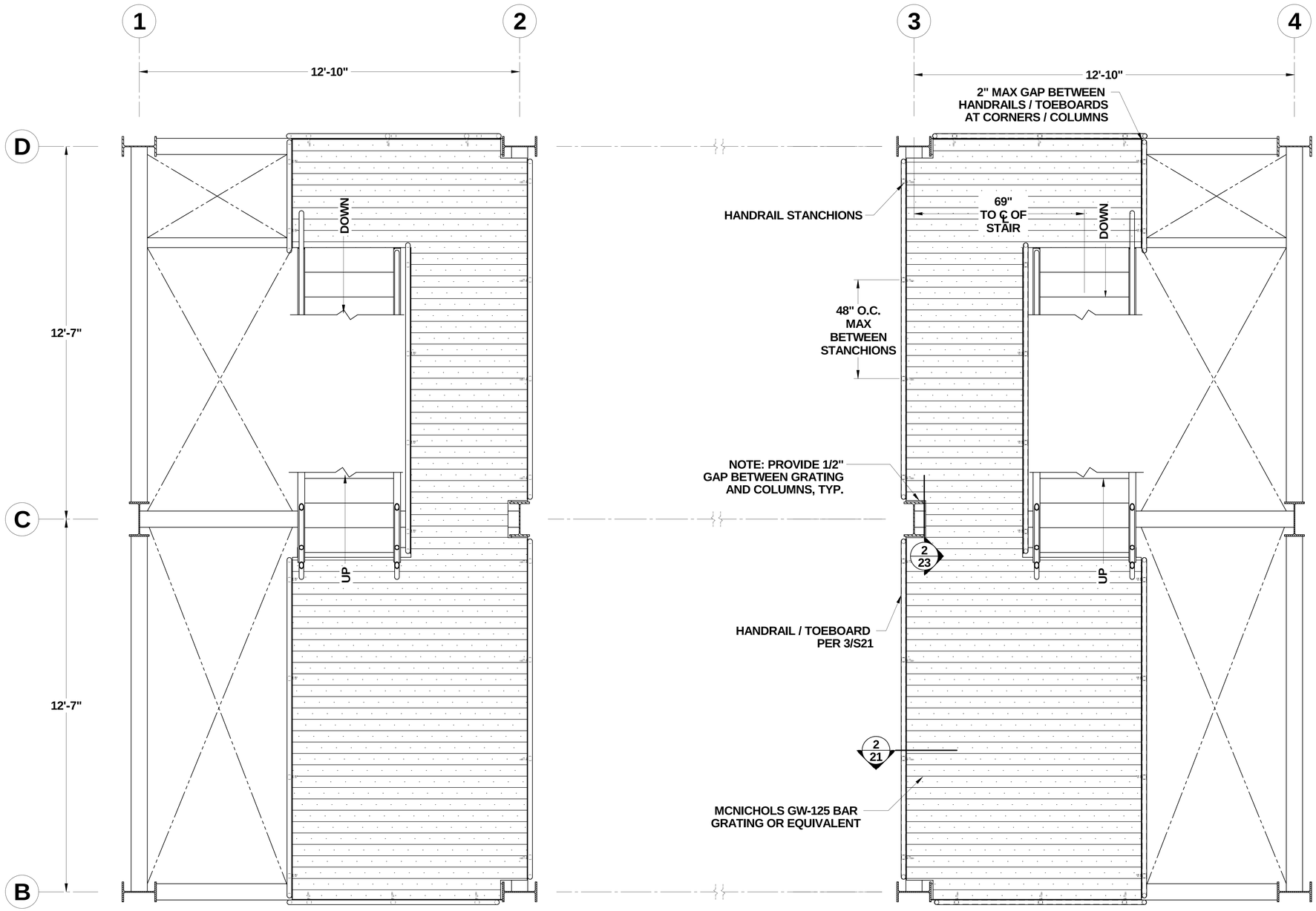

1/10 **LEVEL 2 GRATING PLAN**

INDICATES BEARING BAR ORIENTATION IN E-W DIRECTION

N
S

PUGET SOUND NAVAL SHIPYARD
CODE 2370
ENGINEERING DIVISION

NO DEVIATIONS SHALL BE MADE WITHOUT CODE 2370 APPROVAL

DRAWING NO. **2370 - 1832**

TITLE **RAE SUPPORT TOWERS (DD1)**

SCALE N/A | **SHEET 10of 28** | REV. **ORIG**

TITLE DD1 RAE SUPPORT TOWERS
REV. ORIG
SHEET 10
DWG. NO. 2370 - 1832

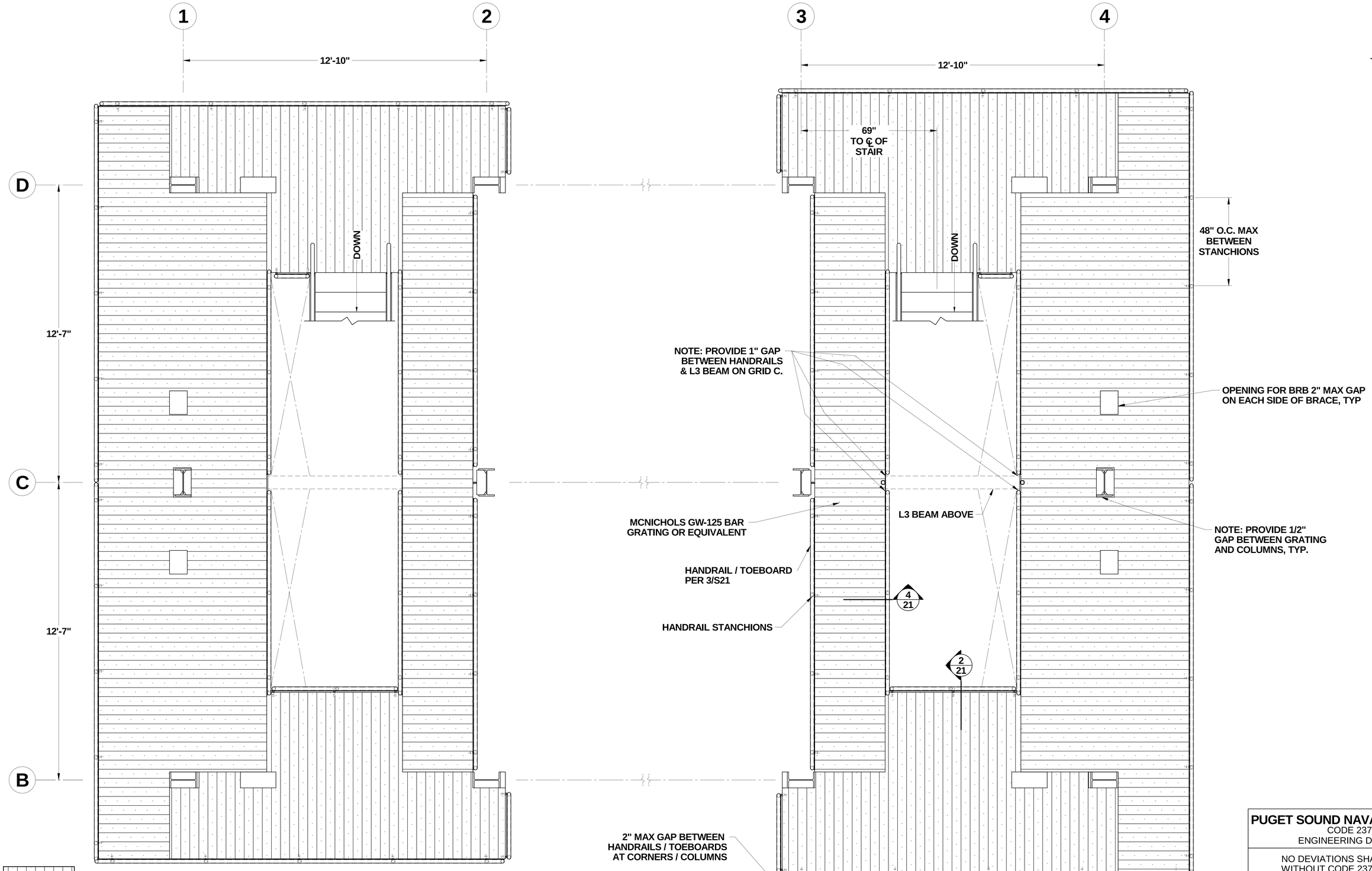

1/11 **CATWALK GRATING PLAN**

PUGET SOUND NAVAL SHIPYARD
CODE 2370
ENGINEERING DIVISION

NO DEVIATIONS SHALL BE MADE
WITHOUT CODE 2370 APPROVAL

DRAWING NO. **2370 - 1832**

TITLE **RAE SUPPORT TOWERS (DD1)**

SCALE N/A | **SHEET 11of 28** | REV. **ORIG**

TITLE DD1 RAE SUPPORT TOWERS | REV. ORIG | SHEET 11

DWG. NO. 2370 - 1832

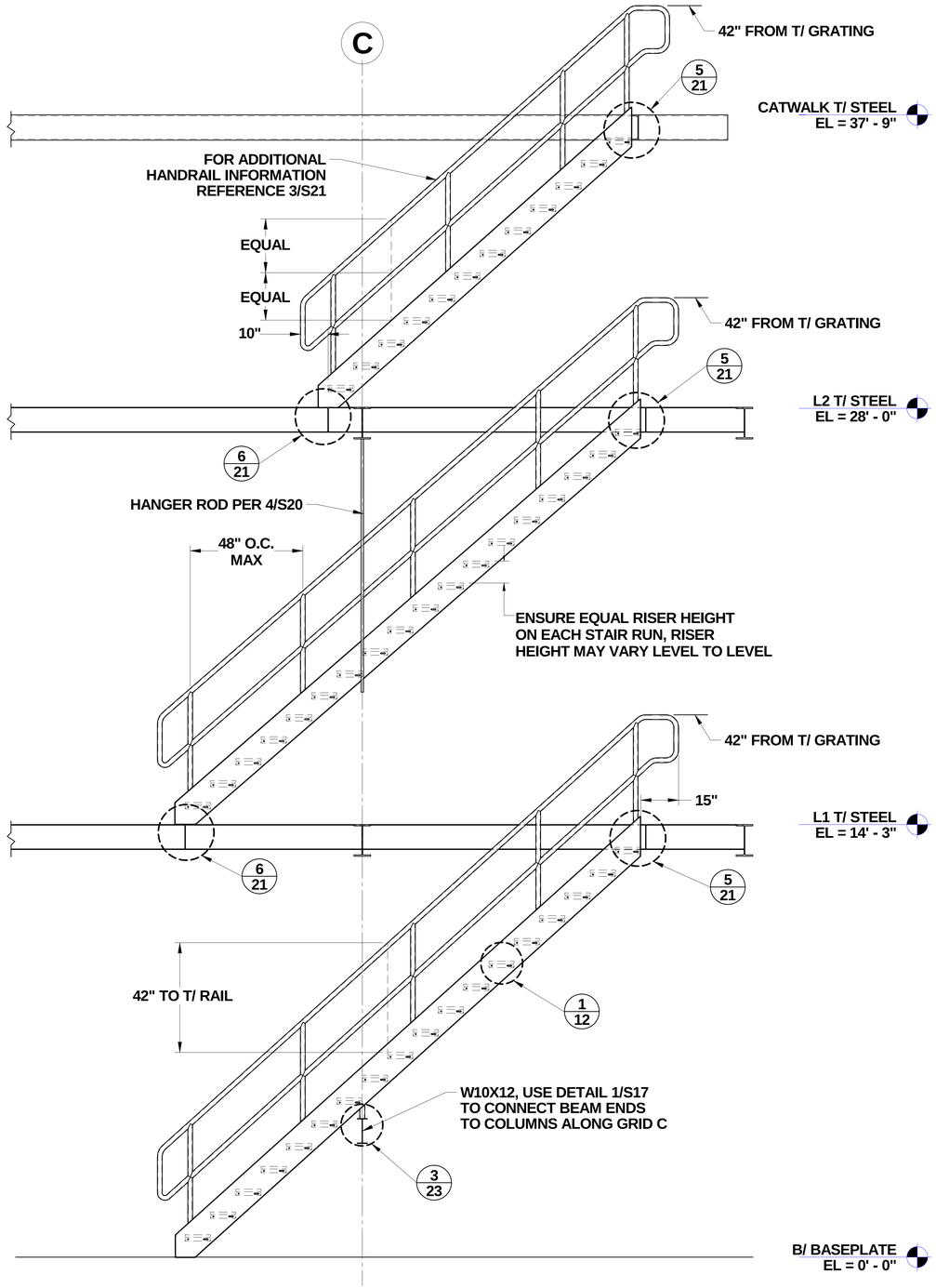

4/12 STAIR ELEVATION

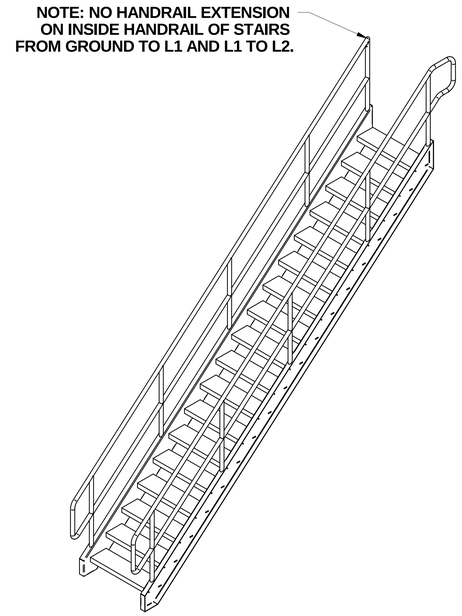

2/12 ISO STAIR VIEW

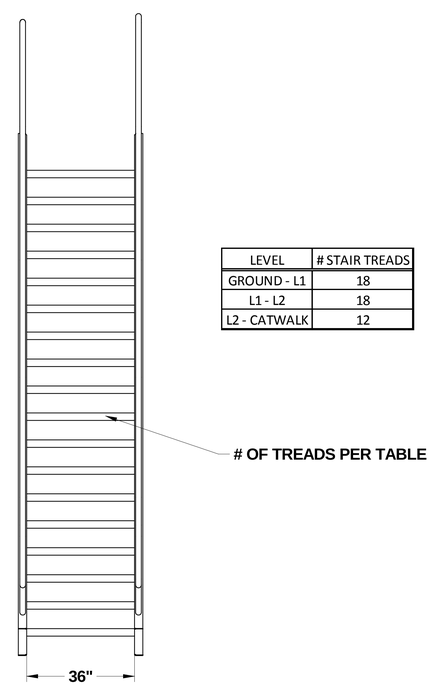

LEVEL	# STAIR TREADS
GROUND - L1	18
L1 - L2	18
L2 - CATWALK	12

3/12 STAIR ELEVATION

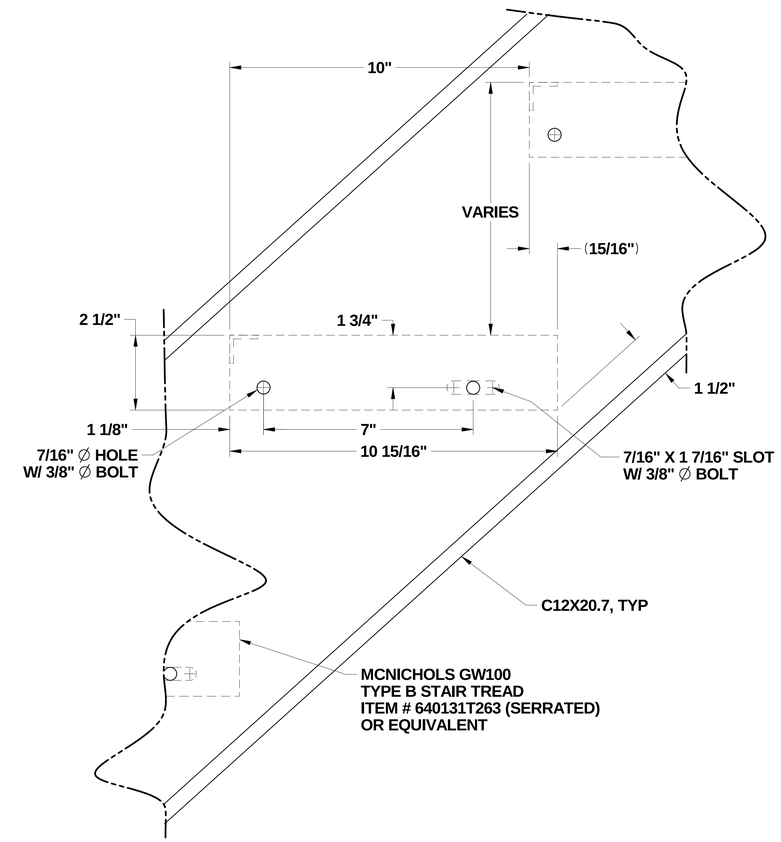

1/12 STAIR TREAD DETAIL

PUGET SOUND NAVAL SHIPYARD
CODE 2370
ENGINEERING DIVISION

NO DEVIATIONS SHALL BE MADE
WITHOUT CODE 2370 APPROVAL

DRAWING NO. **2370 - 1832**

TITLE **RAE SUPPORT TOWERS (DD1)**

SCALE N/A | **SHEET 12of 28** | REV. **ORIG**

TITLE DD1 RAE SUPPORT TOWERS
REV. ORIG
SHEET 12
DWG. NO. 2370 - 1832

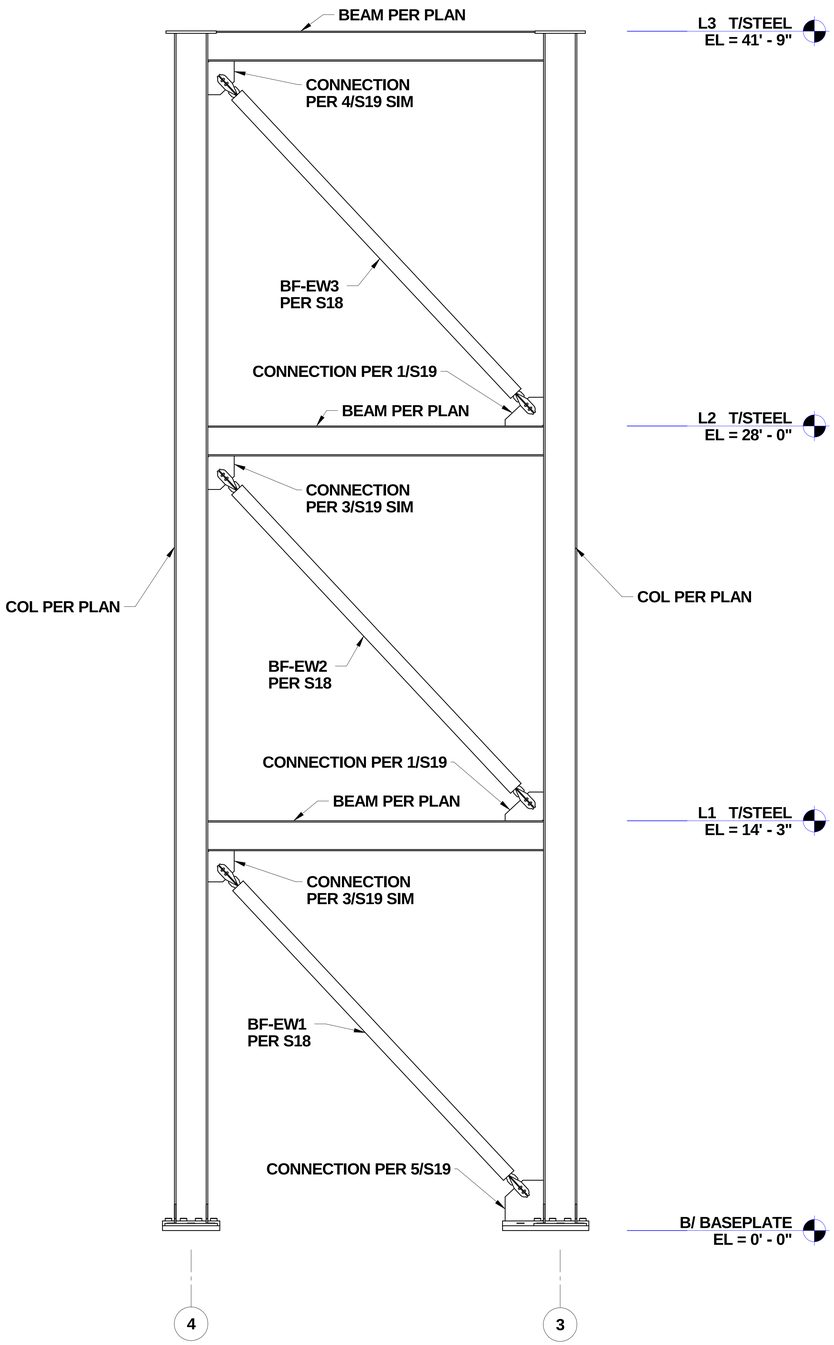

2/13 NORTH ELEVATION

ALONG GRID D LOOKING SOUTH
NOTE: ALL MEMBERS SHOWN IN ELEVATION
ARE PART OF THE SFRS.

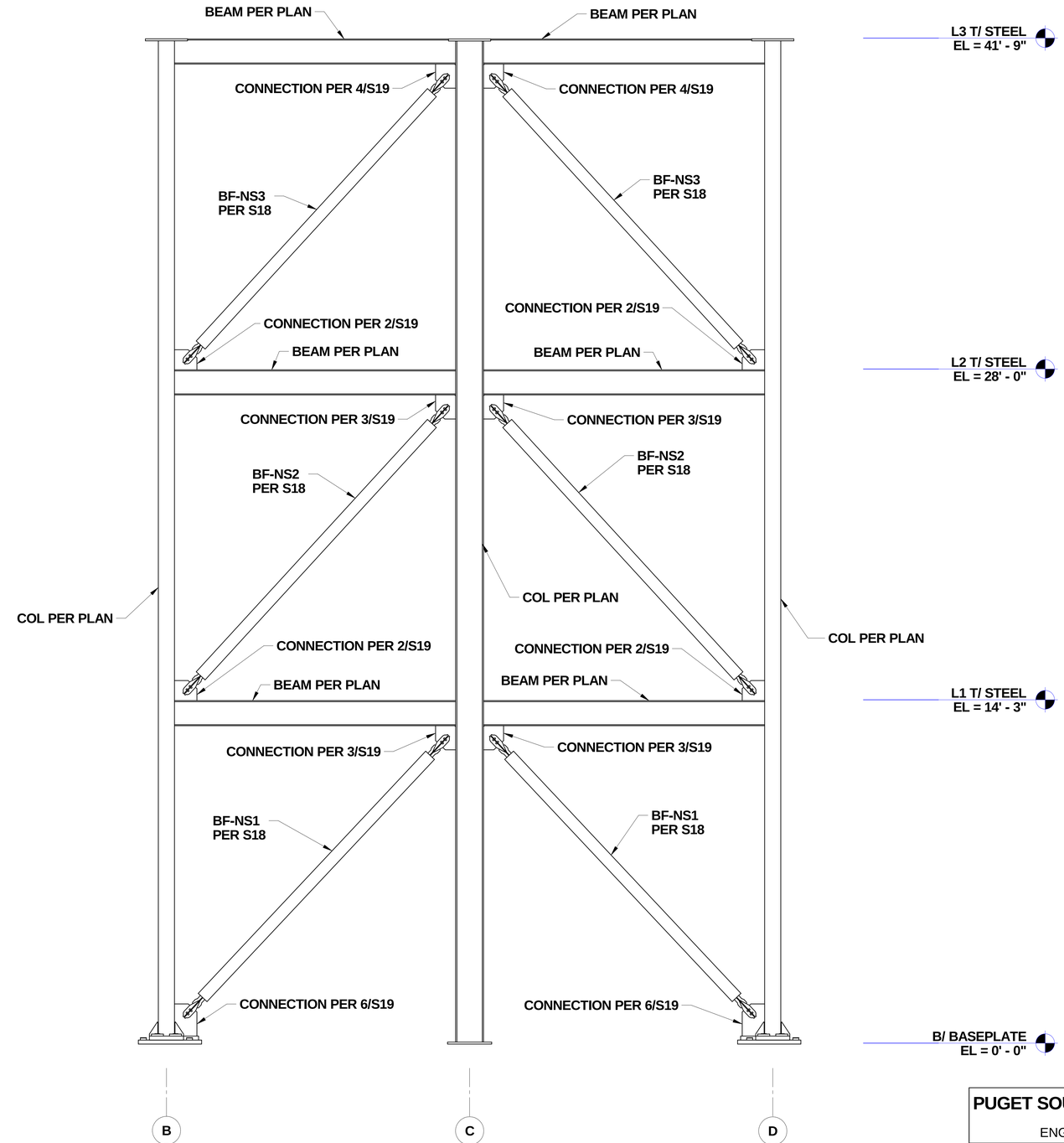

1/13 EAST ELEVATION

ALONG GRID 4 LOOKING WEST
NOTE: ALL MEMBERS SHOWN IN ELEVATION
ARE PART OF THE SFRS.

PUGET SOUND NAVAL SHIPYARD
CODE 2370
ENGINEERING DIVISION

NO DEVIATIONS SHALL BE MADE
WITHOUT CODE 2370 APPROVAL

DRAWING NO. **2370 - 1832**

TITLE **RAE SUPPORT TOWERS (DD1)**

SCALE N/A | **SHEET 13of 28** | REV. **ORIG**

TITLE DD1 RAE SUPPORT TOWERS
REV. ORIG
SHEET 13
DWG. NO. 2370 - 1832

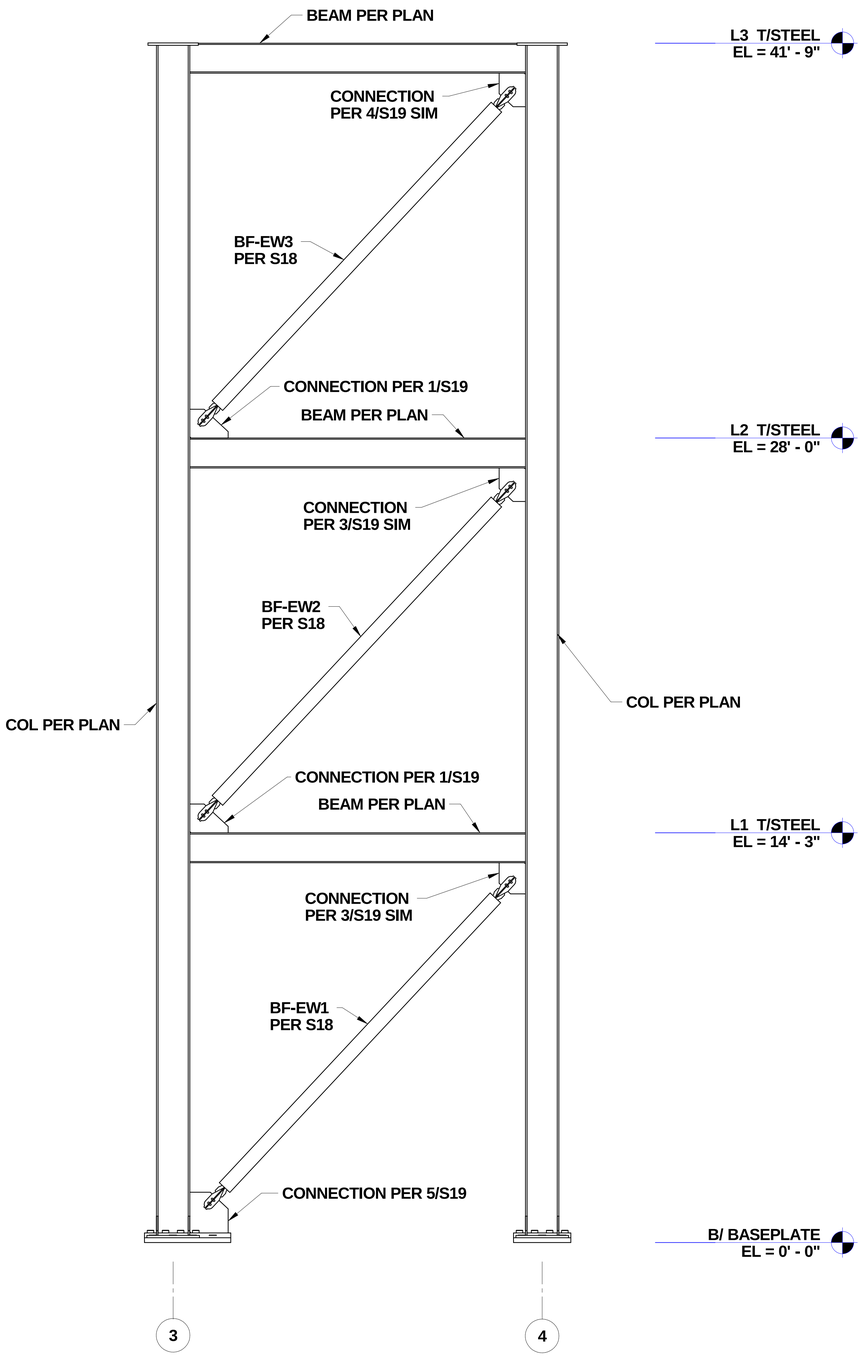

2/14 SOUTH ELEVATION

ALONG GRID B LOOKING NORTH
NOTE: ALL MEMBERS SHOWN IN ELEVATION ARE PART OF THE SFRS.

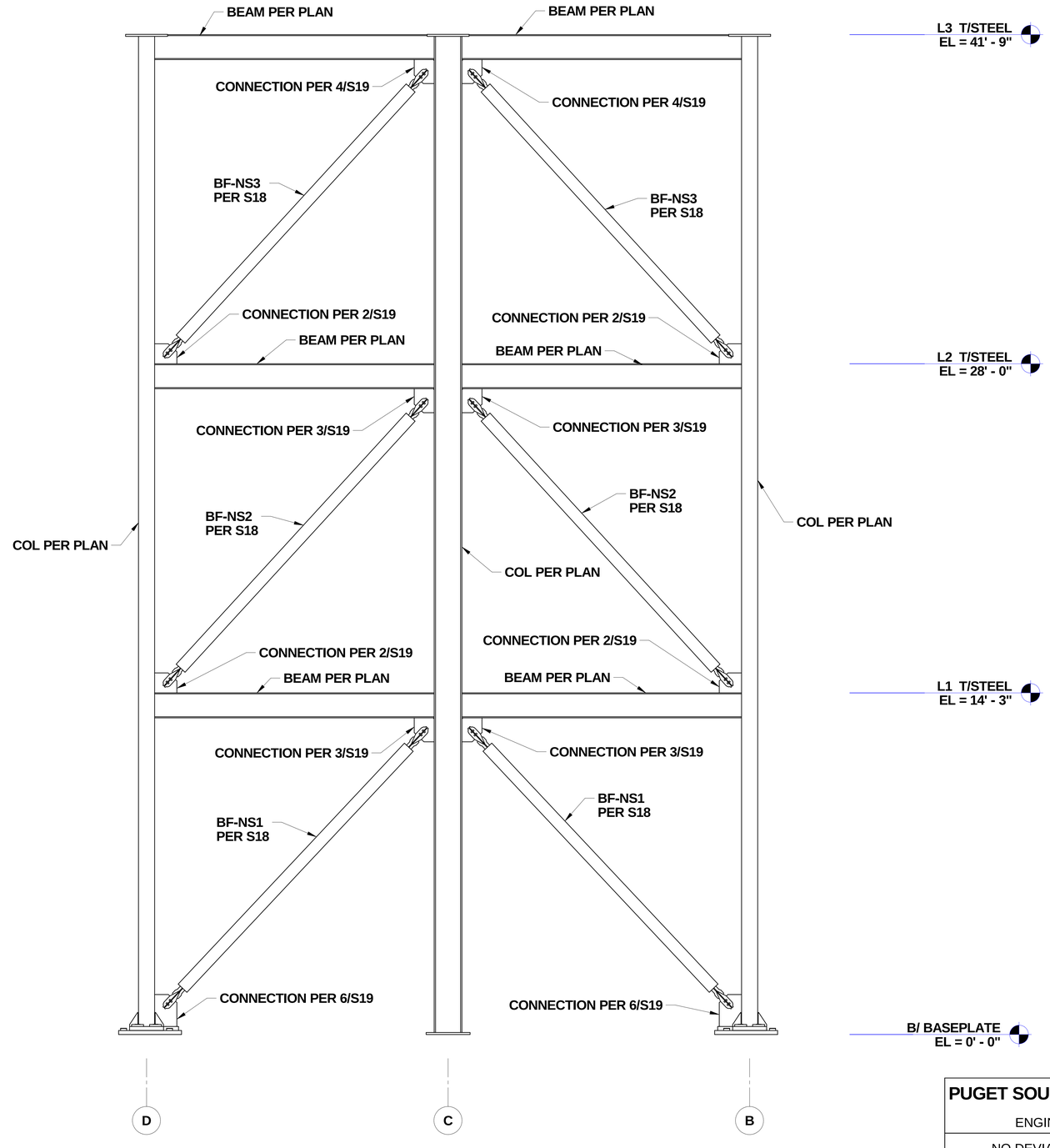

1/14 WEST ELEVATION

ALONG GRID 3 LOOKING EAST
NOTE: ALL MEMBERS SHOWN IN ELEVATION ARE PART OF THE SFRS.

PUGET SOUND NAVAL SHIPYARD
CODE 2370
ENGINEERING DIVISION

NO DEVIATIONS SHALL BE MADE WITHOUT CODE 2370 APPROVAL

DRAWING NO. **2370 - 1832**

TITLE **RAE SUPPORT TOWERS (DD1)**

SCALE N/A | **SHEET 14of 28** | REV. **ORIG**

TITLE DD1 RAE SUPPORT TOWERS
REV. ORIG
SHEET 14
DWG. NO. 2370 - 1832

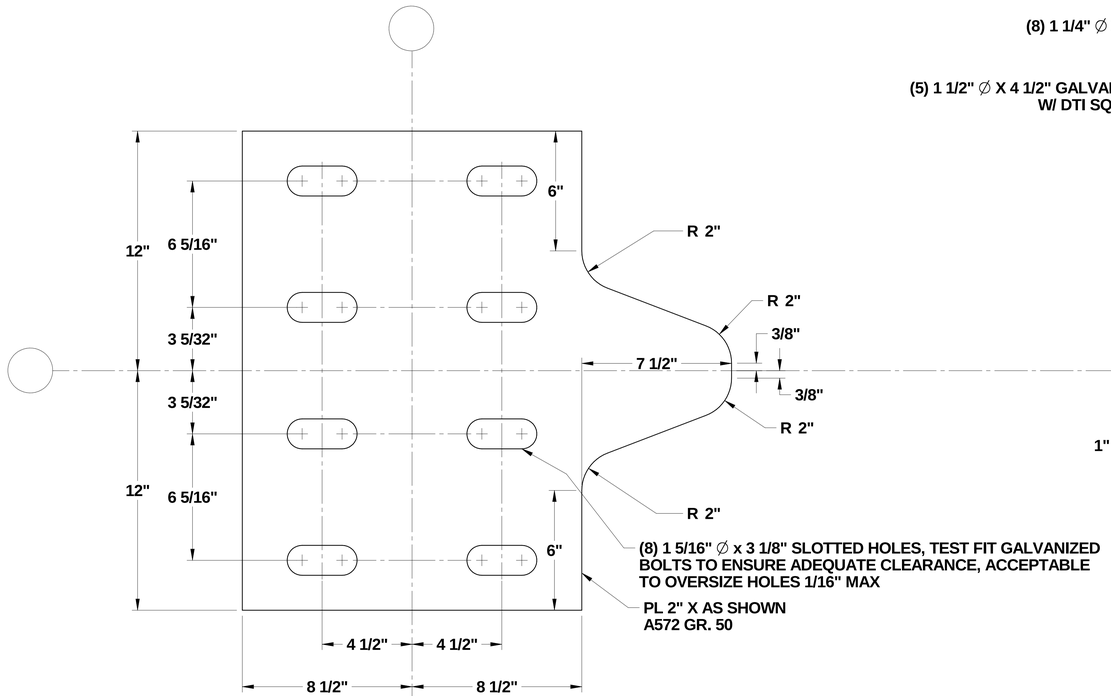

TOP PLATE

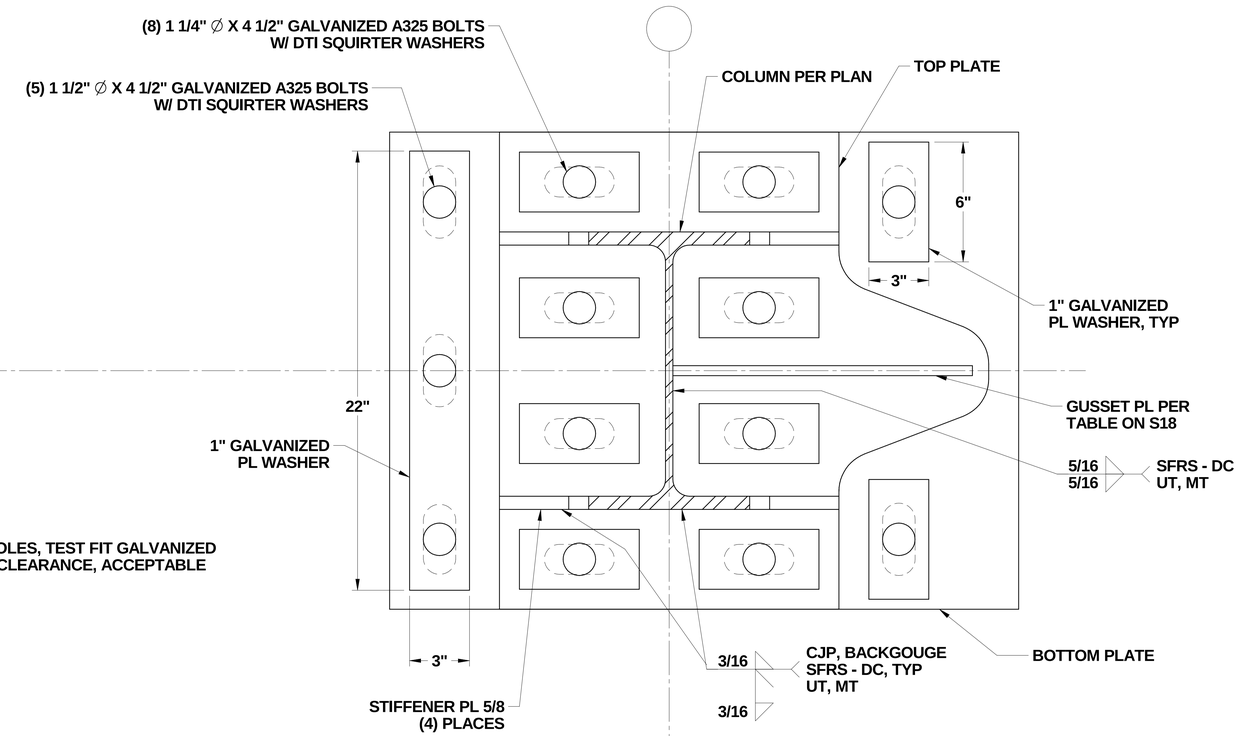

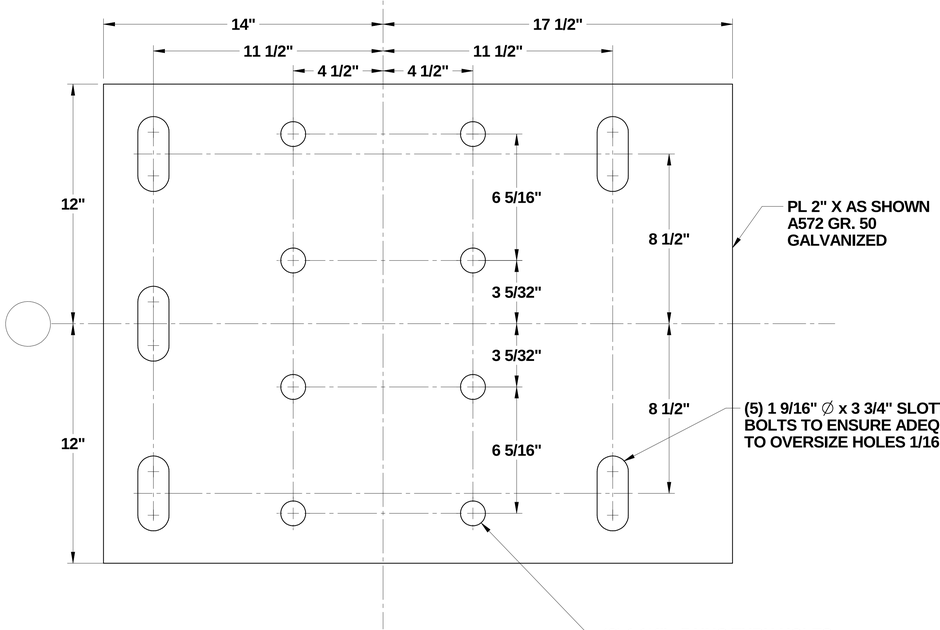

BOTTOM PLATE

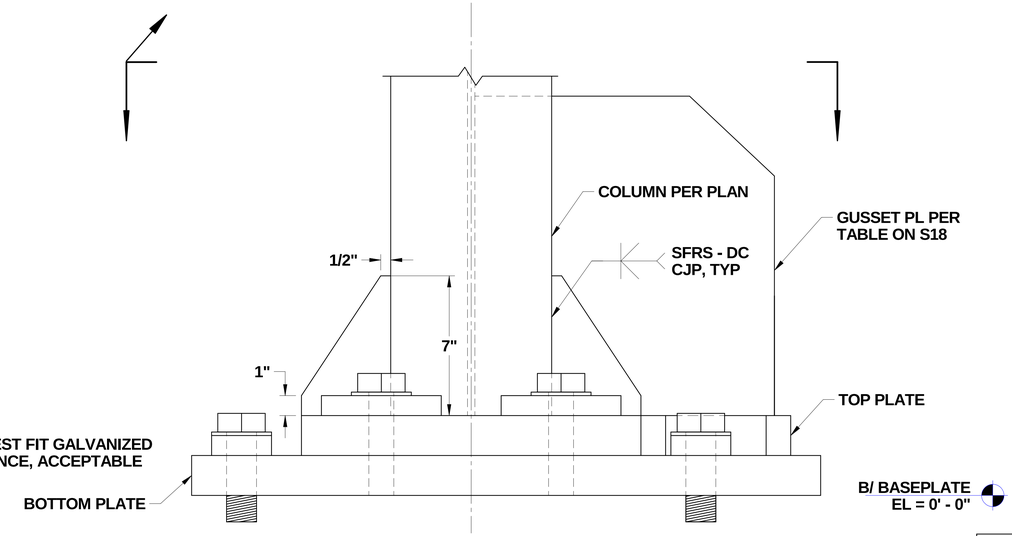

1/15 COLUMN BASEPLATE - SINGLE GUSSET PLATE

GRIDS 1-B, 1-D, 4-B, AND 4-D
NOTE: NO WELDING IN THE k-AREA OF THE COLUMN.

PUGET SOUND NAVAL SHIPYARD
CODE 2370
ENGINEERING DIVISION

NO DEVIATIONS SHALL BE MADE
WITHOUT CODE 2370 APPROVAL

DRAWING NO. 2370 - 1832

TITLE **RAE SUPPORT TOWERS (DD1)**

SCALE N/A | **SHEET 15of 28** | REV. **ORIG**

TITLE DD1 RAE SUPPORT TOWERS
REV. ORIG
SHEET 15
DWG. NO. 2370 - 1832

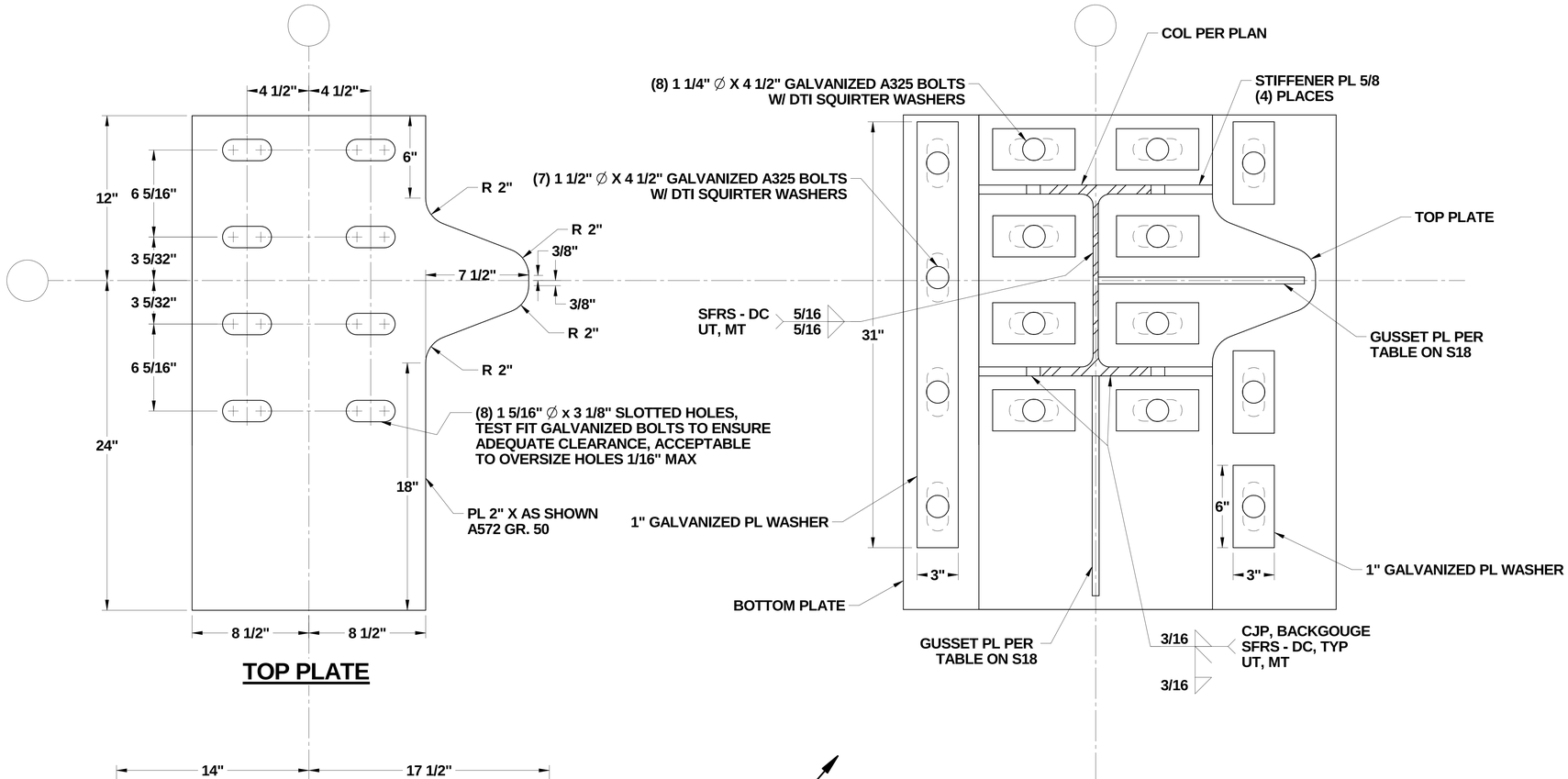

TOP PLATE

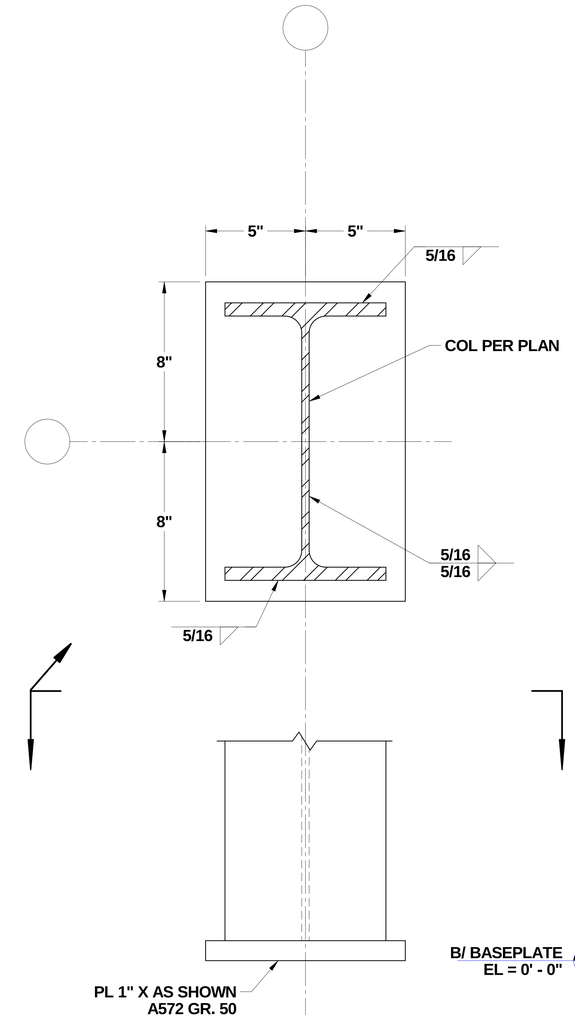

1/16 COLUMN BEARING BASEPLATE

GRIDS 1-C, 2-C, 3-C, AND 4-C
NOTE: NO WELDING IN THE k-AREA OF THE COLUMN.

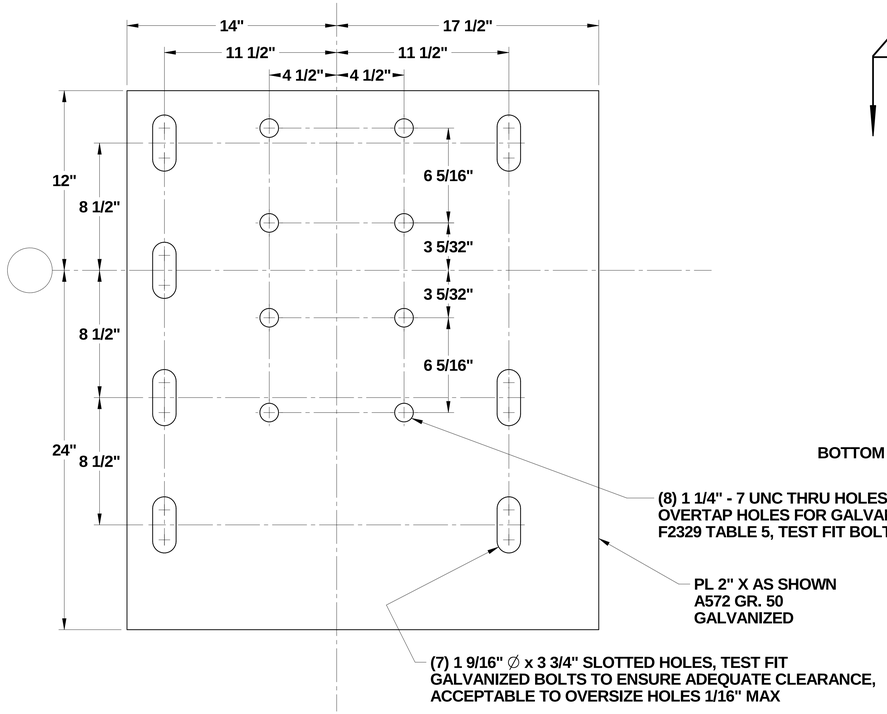

BOTTOM PLATE

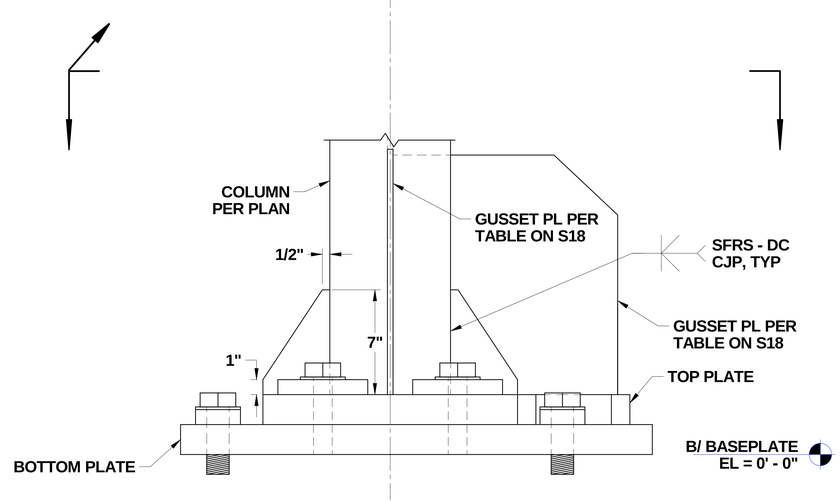

2/16 COLUMN BASEPLATE - DOUBLE GUSSET PLATE

BASEPLATES AT GRIDS 2-B AND 3-D
BASEPLATES AT GRIDS 2-D AND 3-B ARE MIRROR COPIES ABOUT GRID C
NOTE: NO WELDING IN THE k-AREA OF THE COLUMN.

PUGET SOUND NAVAL SHIPYARD
CODE 2370
ENGINEERING DIVISION

NO DEVIATIONS SHALL BE MADE WITHOUT CODE 2370 APPROVAL

DRAWING NO. **2370 - 1832**

TITLE **RAE SUPPORT TOWERS (DD1)**

SCALE N/A | **SHEET 16of 28** | REV. **ORIG**

TITLE DD1 RAE SUPPORT TOWERS
REV. ORIG
SHEET 16
DWG. NO. 2370 - 1832

BEAM TYPE	ROWS OF BOLTS	COLUMNS OF BOLTS	LENGTH (IN)
C10	2	1	6
W10	2	1	6
W12	3	1	9

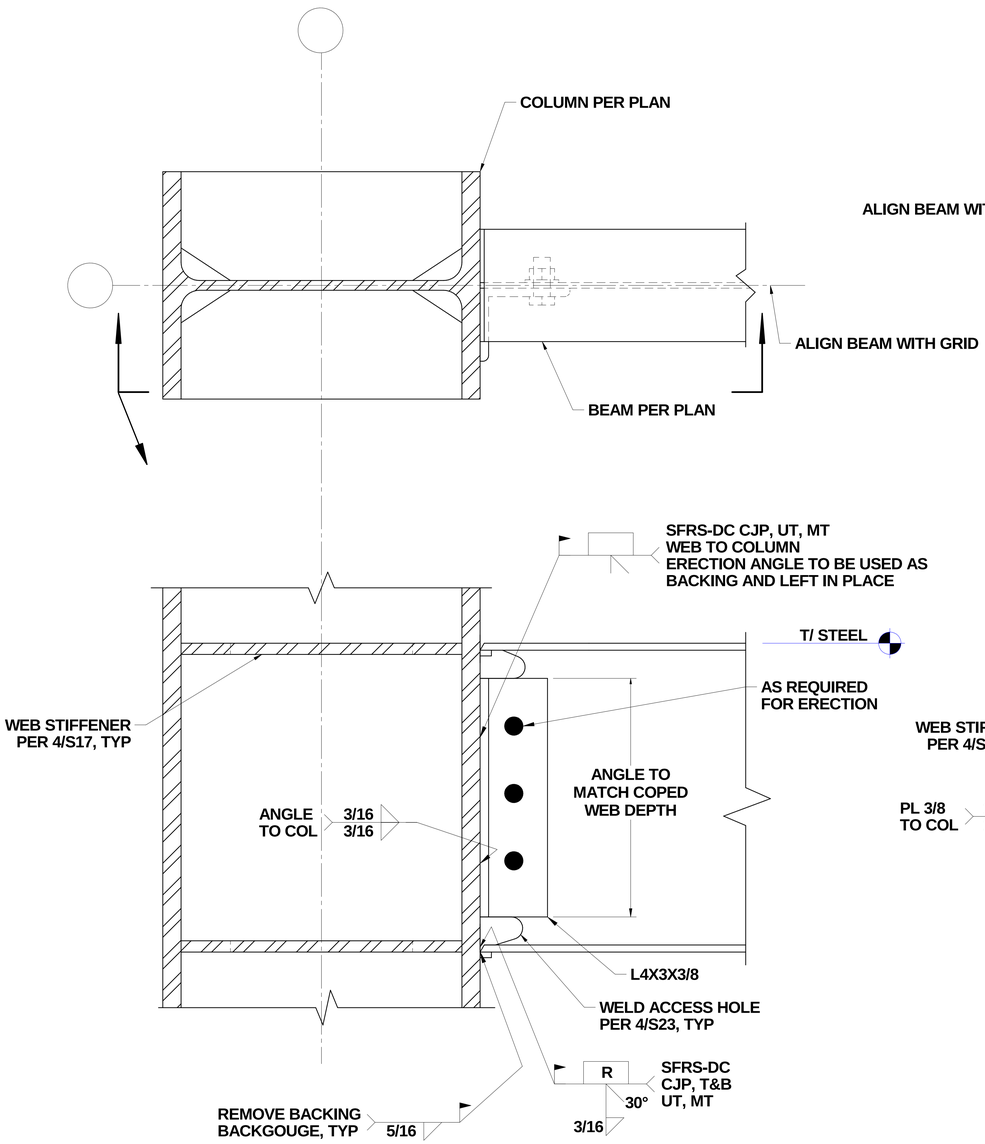

3/17 TYP BEAM MOMENT CONNECTION-TO-COLUMN FLANGE

NOTE: FOR INFORMATION NOT SHOWN, REFER TO 1/S17.

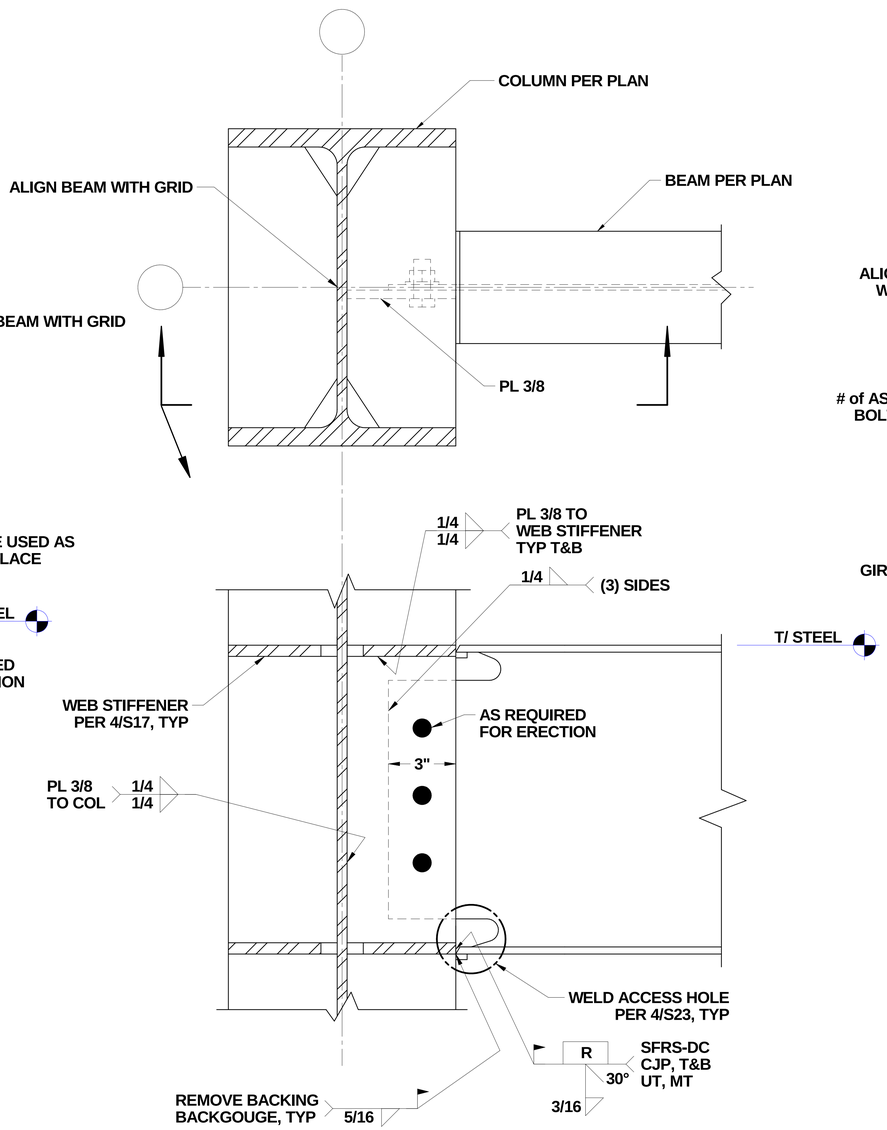

2/17 TYP BEAM MOMENT CONNECTION-TO-COLUMN WEB

NOTE: FOR INFORMATION NOT SHOWN, REFER TO 1/S17.

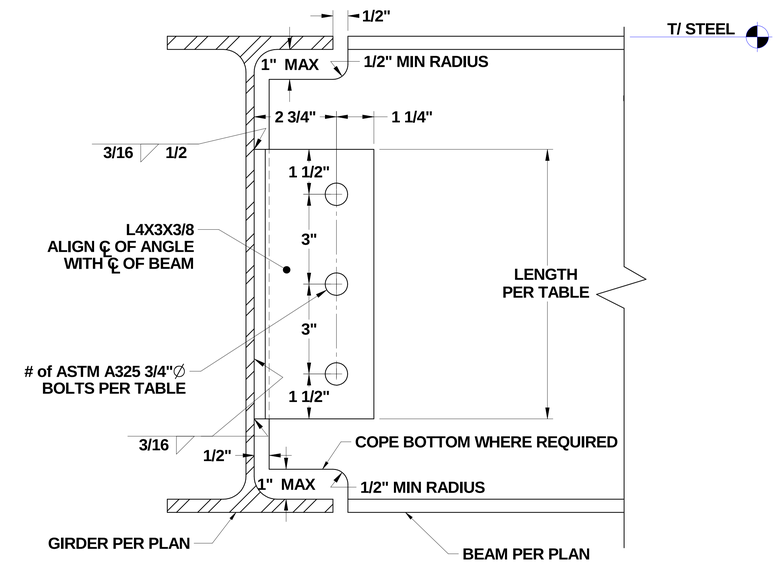

1/17 TYP SHEAR CONNECTION

NOTE: USED AT ALL BEAM TO GIRDER CONNECTIONS, UNO.

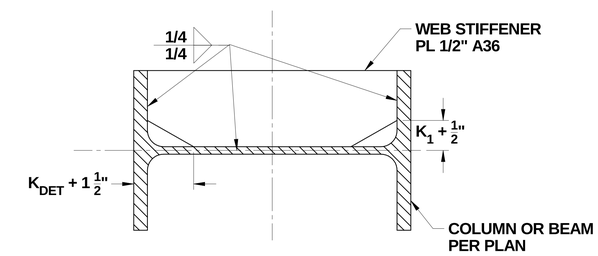

4/17 TYP WEB STIFFENER DETAIL

PUGET SOUND NAVAL SHIPYARD
CODE 2370
ENGINEERING DIVISION

NO DEVIATIONS SHALL BE MADE
WITHOUT CODE 2370 APPROVAL

DRAWING NO. 2370 - 1832

TITLE RAE SUPPORT TOWERS (DD1)

SCALE N/A | SHEET 17of 28 | REV. ORIG

TITLE DD1 RAE SUPPORT TOWERS

DWG. NO. 2370 - 1832

REV. ORIG | SHEET 17

BUCKLING RESTRAINED BRACE (BRB) SCHEDULE

EOR-ID	Line	Grids	Lvls	Qty	Pu	Core Area	Stiffness Modification	L'_{ysc}	Minimum Stroke	W_g	W_{sg}	Casing			Gusset Info at Lower End of BRB									Gusset Info at Upper End of BRB								
												Shape	H	W	t_g	t_{rg}	W_{rg}	W_b	L_{wb}	W_c	L_{wc}	L_{gb}	L_{gc}	t_g	t_{rg}	W_{rg}	W_b	L_{wb}	W_c	L_{wc}	L_{gb}	L_{gc}
#		#	#	#	kips	in²	Factor (Kf)	in	in	#	#	t or p	in	in	in	in	in	in	in	in	in	in	in	in	in	in	in	in	in	in	in	in	in
BF-NS1	1, 2, 3, 4	B-C, C-D	L0	8	18.7	1.00	1.40	162.21	3.00	3/16	1/4	t	6	6	1/2	0	-	3/16	11	3/16	8	15	10	1/2	0	-	3/16	8	3/16	10	10	12
BF-NS2	1, 2, 3, 4	B-C, C-D	L1	8	18.7	1.00	1.40	162.21	3.00	3/16	1/4	t	6	6	1/2	0	-	3/16	11	3/16	8	15	10	1/2	0	-	3/16	8	3/16	10	10	12
BF-NS3	1, 2, 3, 4	B-C, C-D	L2	8	18.7	1.00	1.40	159.28	3.00	3/16	1/4	t	6	6	1/2	0	-	3/16	11	3/16	14	15	16	1/2	0	-	3/16	8	3/16	10	10	12
BF-EW1	B, D	1-2, 3-4	L0	4	48.9	1.50	1.25	160.55	3.00	3/16	1/4	t	6	6	1/2	0	-	1/4	12	3/16	10	16	12	1/2	0	-	3/16	9	3/16	12	11	14
BF-EW2	B, D	1-2, 3-4	L1	4	48.9	1.50	1.25	160.55	3.00	3/16	1/4	t	6	6	1/2	0	-	1/4	12	3/16	10	16	12	1/2	0	-	3/16	9	3/16	12	11	14
BF-EW3	B, D	1-2, 3-4	L2	4	48.9	1.50	1.25	157.84	3.00	3/16	1/4	t	6	6	1/2	0	-	1/4	12	3/16	15	16	17	1/2	0	-	3/16	9	3/16	11	11	13

Table Symbols

- W_b = Minimum size of beam weld
- L_{wb} = Minimum length of beam weld
- t_g = Thickness of gusset
- **Pu** = Brace Design Force
- W_c = Minimum size of column weld
- L_{wc} = Minimum length of column weld
- W_g = Size of weld for BRB core to gusset
- W_{sg} = Size of weld for BRB core stiffener to gusset
- **Shape** p = pipe, t = tube (square/rect)
- **W** = Casing Width or Diameter
- **H** = Casing Height or Diameter
- t_c = Casing Thickness
- L'_{ysc} = Yielding length of core
- L_{gc} = Approximate height of gusset (not for detailing)
- L_{gb} = Approximate width of gusset (not for detailing) (At V or Chev, equal to 1/2 gusset width)
- t_{rg} = Thickness of gusset reinforcing pad (repad), where occurs
- W_{rg} = Minimum size of repad weld to gusset

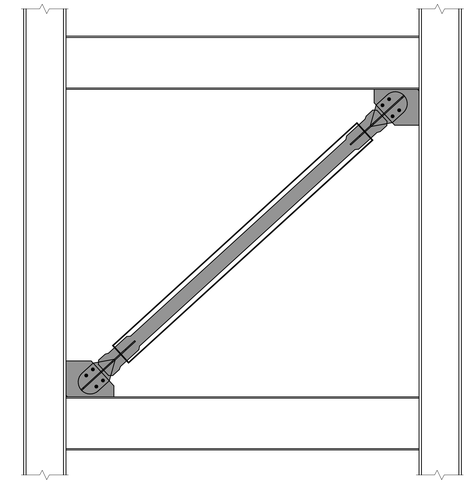

1/18 **BRB PROTECTED ZONE INFORMATION**

NOTE: SHADED REGION REPRESENTS PROTECTED ZONE.

BRB SCHEDULE NOTES:

1. THE BRB SUPPLIER SHALL SUBMIT SIGNED AND SEALED CALCULATIONS WITH ALL SHOP DRAWINGS. THE ENGINEER SHALL BE A REGISTERED STRUCTURAL ENGINEER IN THE STATE OF WASHINGTON.
2. THE BRB SUPPLIER SHALL DESIGN BRACE CONNECTIONS IN ACCORDANCE WITH AISC 341-10.
3. THE WELD SIZES AND GUSSET PLATE SIZES GIVEN IN THE SCHEDULE ARE FOR PRICING PURPOSES ONLY. FINAL DESIGN TO BE BY THE BRB SUPPLIER.
4. ALL GUSSET PLATES SHALL BE ASTM A572 GR. 50.
5. APPROVED BUCKLING RESTRAINED BRACE SUPPLIERS:

   COREBRACE
   5789 W. WELLS PARK RD.
   WEST JORDAN, UT, 84081
   www.corebrace.com
   1-801-280-0701

   STAR SEISMIC
   6300 N. SAGEWOOD DRIVE, SUITE H #511
   PARK CITY, UT, 84098
   www.starseismic.net
   1-435-940-9222

6. Pu GIVEN IS THE GOVERNING CODE LEVEL FORCE FROM ASCE 7-10 STRENGTH BASED LOAD COMBINATIONS 5 AND 7.
7. THE MAXIMUM OUT-TO-OUT DIMENSIONS FOR EACH BRACE IS 8".
8. Fysc IS THE ACTUAL YIELD STRESS OF THE STEEL CORE AS DETERMINED BY COUPON TESTING. CORE MATERIAL SHALL BE ASTM A36 MATERIAL SELECTED TO PROVIDE 38 ksi ≤ Fysc ≤ 46 ksi. CHARPY TESTING REQUIRED WHEN THICKNESS OF THE CORE MATERIAL EXCEEDS 2".
9. BRACE STIFFNESS Keff TO BE KF x Asc x E/Lwp-wp ± 10%. WHERE THE VALUES FOR STIFFNESS MODIFICATION FACTOR (KF) & STEEL CORE AREA (Asc) ARE TAKEN FROM THE TABLE PROVIDED FOR EACH BRACE ELEVATION & Lwp-wp IS THE WORKPOINT -TO-WORKPOINT LENGTH OF THE BRACE.
10. BRACE STRAINS TO BE CALCULATED AS Pservice/Keff, WHERE Pservice = Pu/(ρI). ρ IS THE CODE REDUNDANCY FACTOR (1.3 FOR THIS STRUCTURE) AND I IS THE CODE IMPORTANCE FACTOR (1.25 FOR THIS STRUCTURE).
11. MAXIMUM ω NOT TO EXCEED 1.54. MAXIMUM β NOT TO EXCEED 1.10.
12. MINIMUM STROKE TO OCCUR AT EACH END OF BRACE IN TENSION AND COMPRESSION DIRECTIONS. CORE EXTENSION TO REMAIN STABLE OVER 2X ITS LENGTH.
13. DETAIL 1/S18 ILLUSTRATES THE BRB PROTECTED ZONES WHERE NO STRUCTURAL CONNECTIONS ARE ALLOWED.

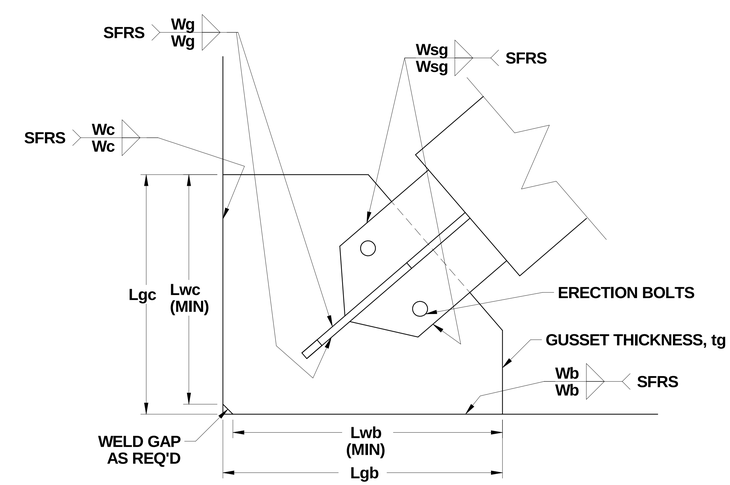

2/18 **TYP GUSSET AND BRB DETAIL**

NOTE: SEE SCHEDULE FOR VALUES.

PUGET SOUND NAVAL SHIPYARD
CODE 2370
ENGINEERING DIVISION

NO DEVIATIONS SHALL BE MADE WITHOUT CODE 2370 APPROVAL

DRAWING NO. **2370 - 1832**

TITLE **RAE SUPPORT TOWERS (DD1)**

SCALE N/A | **SHEET 18of 28** | REV. **ORIG**

TITLE DD1 RAE SUPPORT TOWERS | REV. ORIG | SHEET 18

DWG. NO. 2370 - 1832

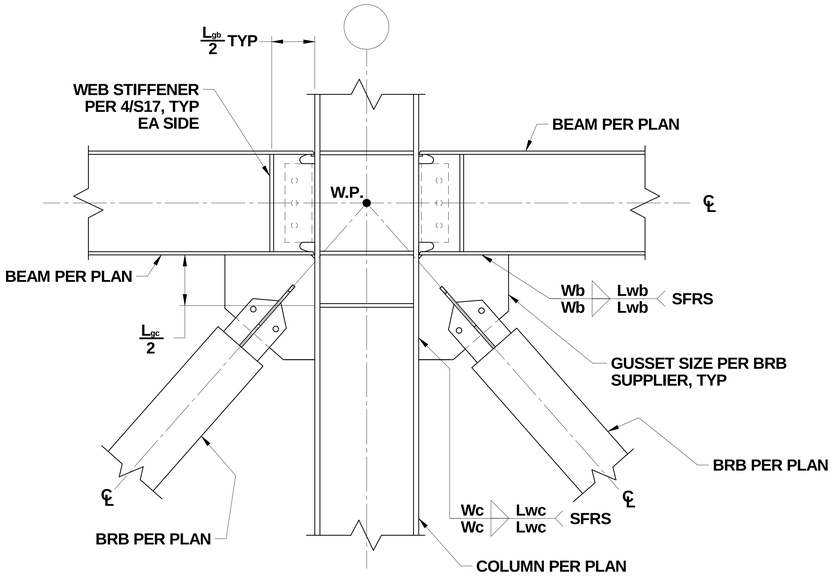

3/19 TYP GUSSET PL CONNECTION TO BOTTOM OF BEAM

NOTE: BRB / BEAM ONLY ON ONE SIDE AT SIM

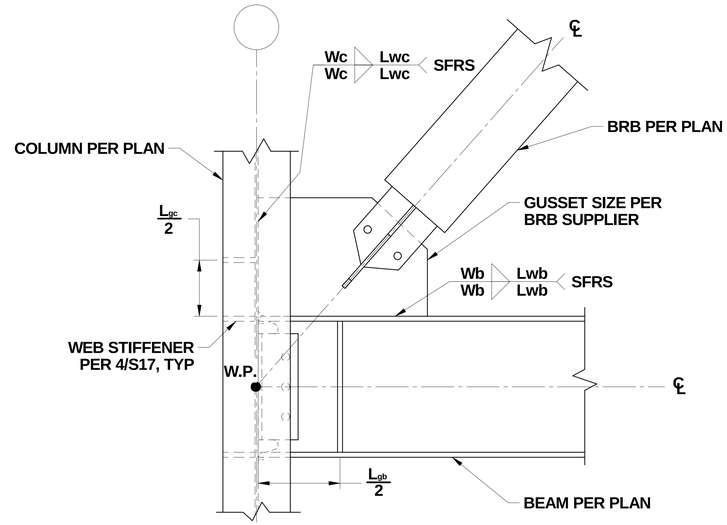

2/19 TYP GUSSET PL CONNECTION TO COLUMN WEB

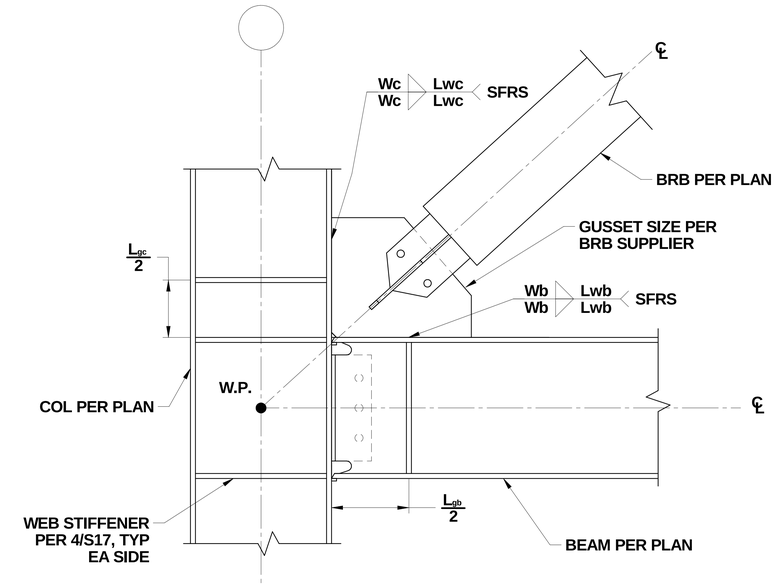

1/19 TYP GUSSET PL CONNECTION TO COLUMN FLANGE

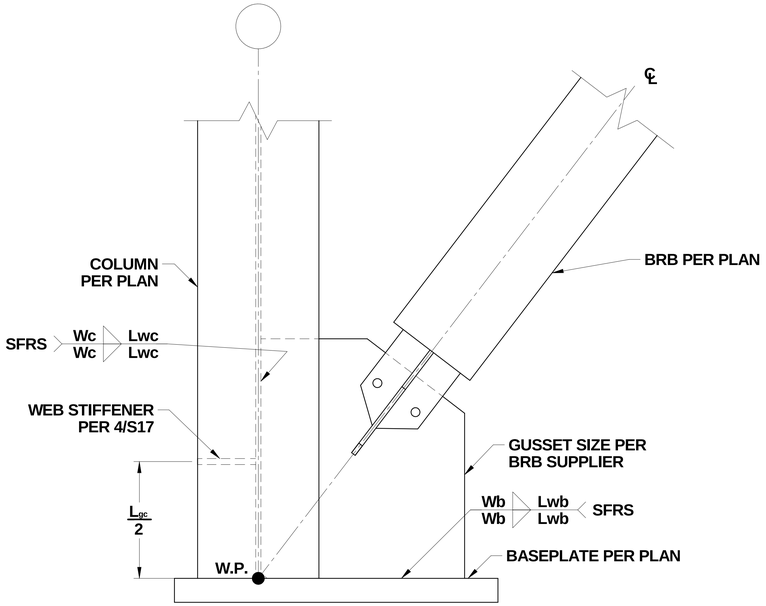

6/19 TYP GUSSET PL TO COLUMN WEB AT BASEPLATE

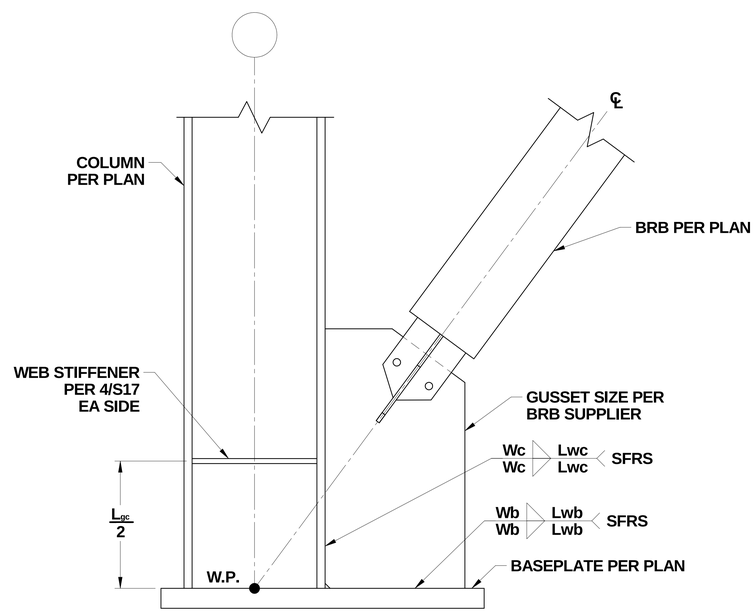

5/19 TYP GUSSET PL TO COLUMN FLANGE AT BASEPLATE

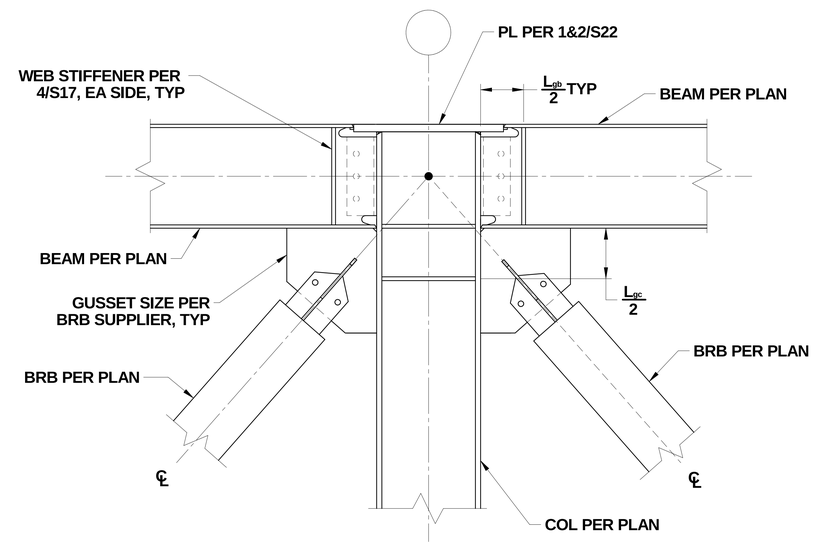

4/19 TYP GUSSET PL CONNECTION TO BOTTOM OF BEAM AT L3

NOTE: FOR INFORMATION NOT SHOWN, REFERENCE 3/S19
BRB / BEAM ONLY ON ONE SIDE AT SIM

PUGET SOUND NAVAL SHIPYARD
CODE 2370
ENGINEERING DIVISION

NO DEVIATIONS SHALL BE MADE WITHOUT CODE 2370 APPROVAL

DRAWING NO. 2370 - 1832

TITLE RAE SUPPORT TOWERS (DD1)

SCALE N/A | SHEET 19of 28 | REV. ORIG

SHEET 19 | REV. ORIG | TITLE DD1 RAE SUPPORT TOWERS | DWG. NO. 2370 - 1832

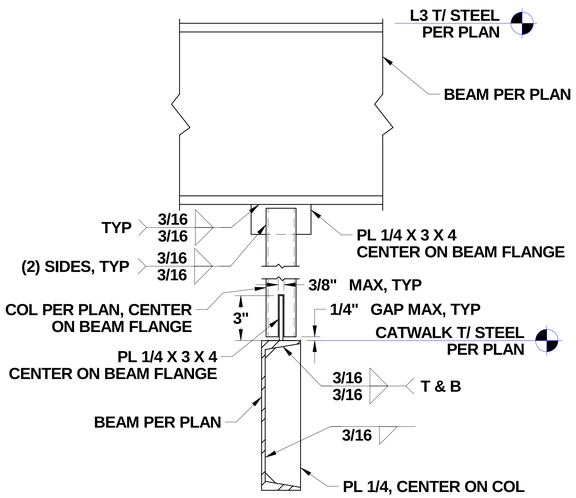

2/20 CATWALK SUPPORT COLUMN DETAIL

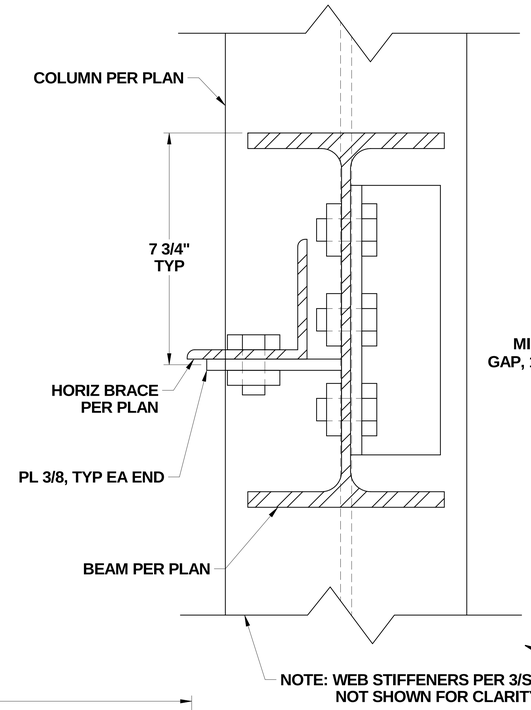

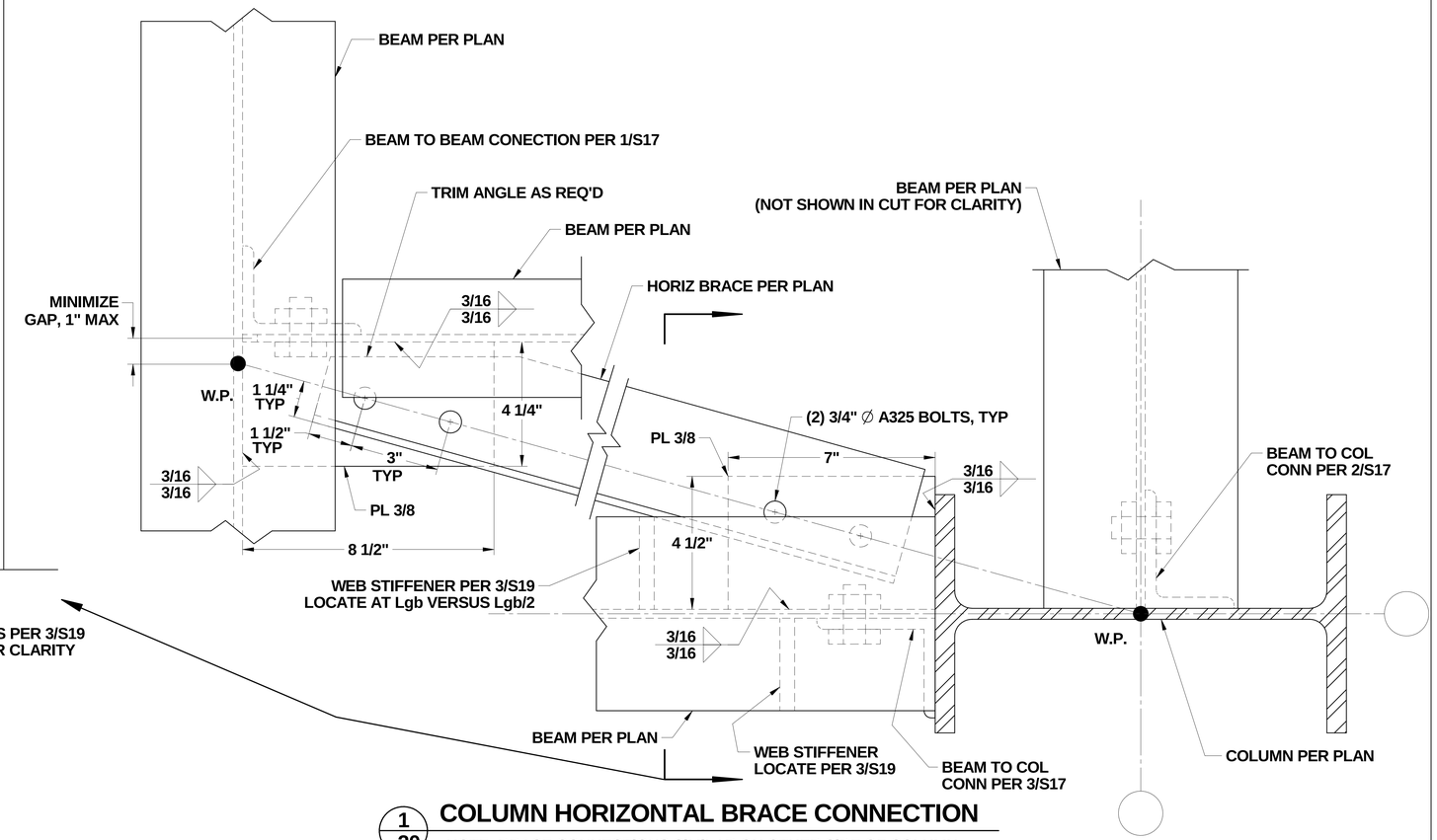

1/20 COLUMN HORIZONTAL BRACE CONNECTION

NOTE: BRACE CONNECTIONS SIMILAR ON OTHER SIDE OF COLUMN.

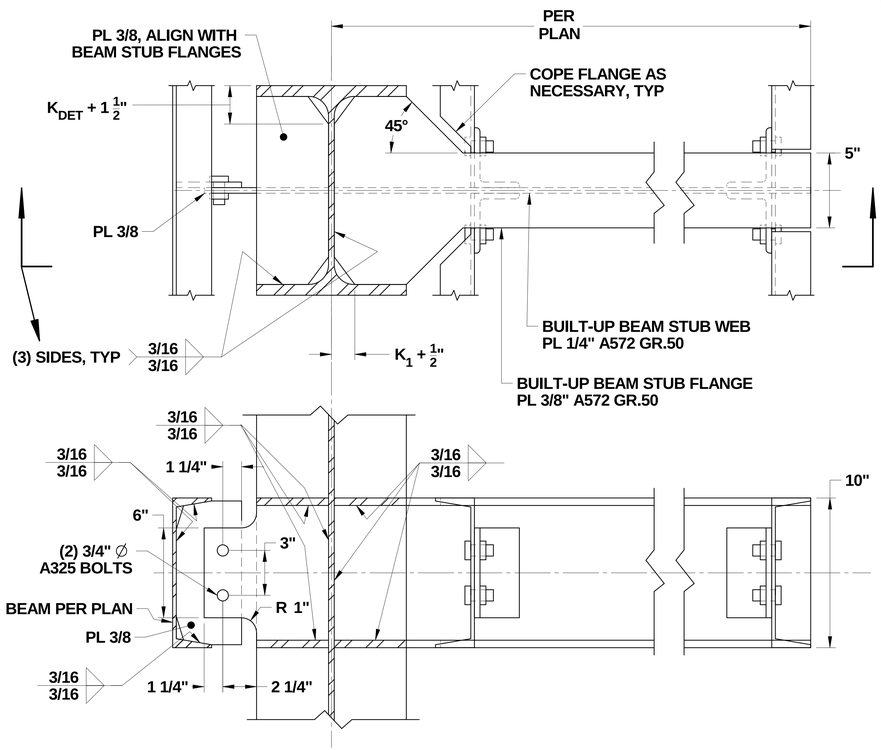

5/20 CATWALK CANTILEVERED BEAM CONNECTION

NOTE: NO BUILT-UP BEAM STUB AT SIM.

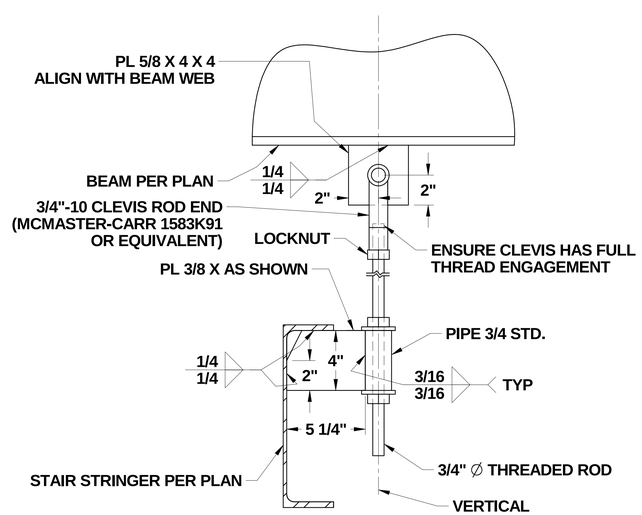

4/20 STAIR STRINGER SUPPORT DETAIL

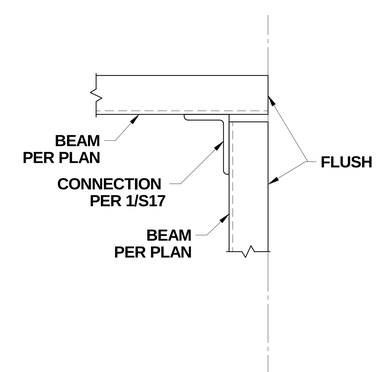

3/20 CHANNEL CORNER CONNECTION

PUGET SOUND NAVAL SHIPYARD
CODE 2370
ENGINEERING DIVISION

NO DEVIATIONS SHALL BE MADE
WITHOUT CODE 2370 APPROVAL

DRAWING NO. 2370 - 1832

TITLE RAE SUPPORT TOWERS (DD1)

SCALE N/A | SHEET 20of 28 | REV. ORIG

TITLE DD1 RAE SUPPORT TOWERS

SHEET 20 | REV. ORIG

DWG. NO. 2370 - 1832

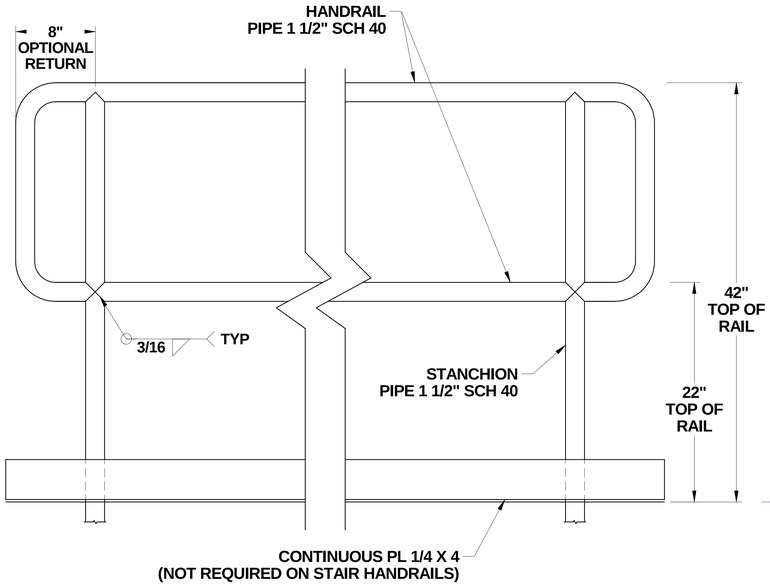

3/21 HANDRAIL ELEVATION

NOTE: HANDRAIL CORNERS MAY BE ROUNDED OR MITRED.
NOTE: HANDRAILS MUST BE FULLY WELDED TO STANCHIONS.

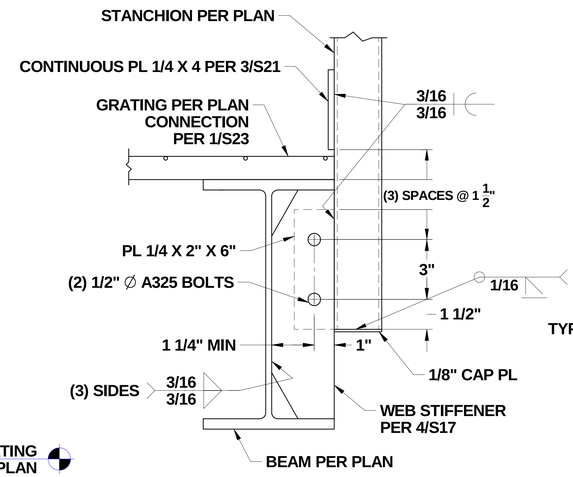

2/21 HANDRAIL CONNECTION TO SUPPORT BEAMS

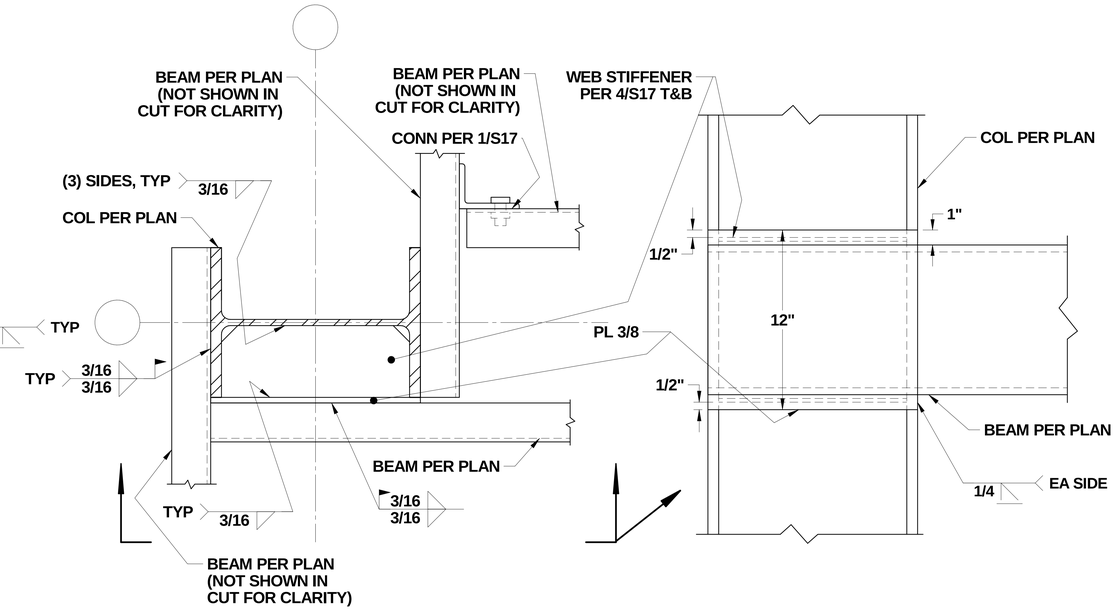

1/21 CATWALK BEAM TO COLUMN CONNECTIONS

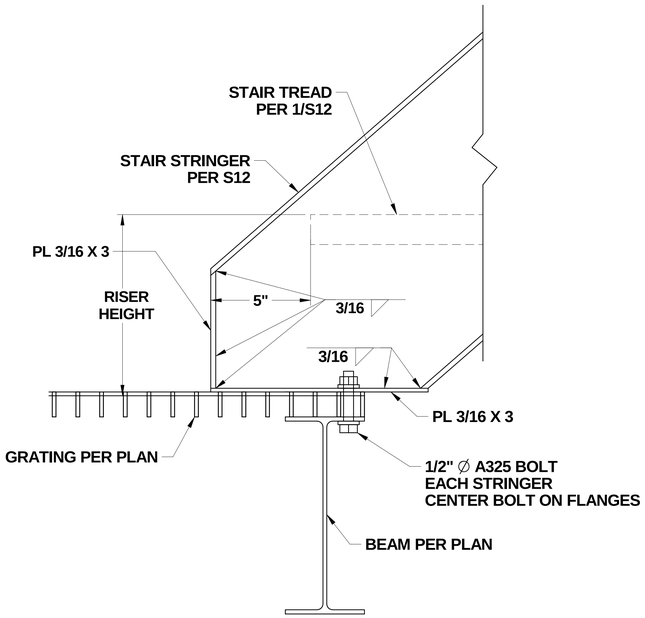

6/21 LOWER STAIR STRINGER TO BEAM CONNECTION

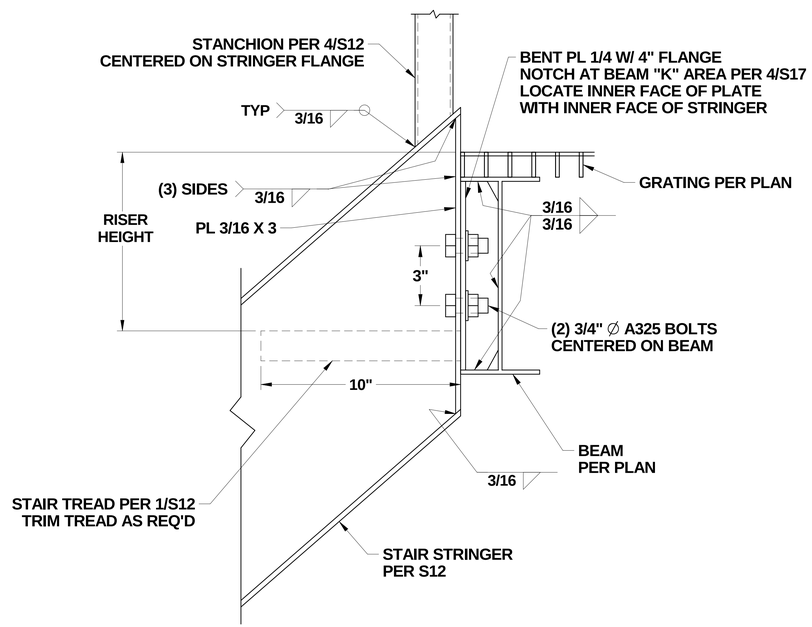

5/21 UPPER STAIR STRINGER TO BEAM CONNECTION

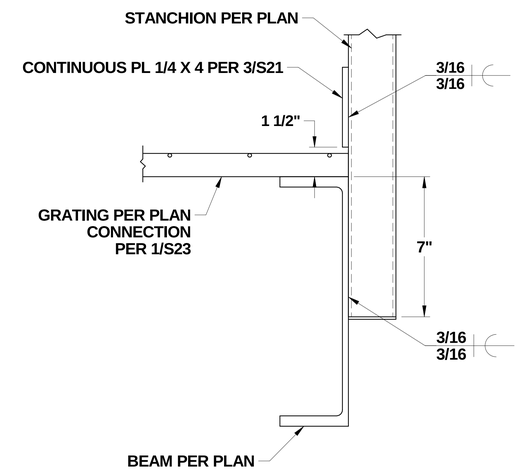

4/21 HANDRAIL CONNECTION TO CHANNEL WEB

NOTE: FOR INFORMATION NOT SHOWN REFERENCE 2/S21.

PUGET SOUND NAVAL SHIPYARD
CODE 2370
ENGINEERING DIVISION

NO DEVIATIONS SHALL BE MADE
WITHOUT CODE 2370 APPROVAL

DRAWING NO. **2370 - 1832**

TITLE **RAE SUPPORT TOWERS (DD1)**

SCALE N/A | **SHEET 21of 28** | REV. **ORIG**

TITLE DD1 RAE SUPPORT TOWERS | REV. ORIG | SHEET 21

DWG. NO. 2370 - 1832

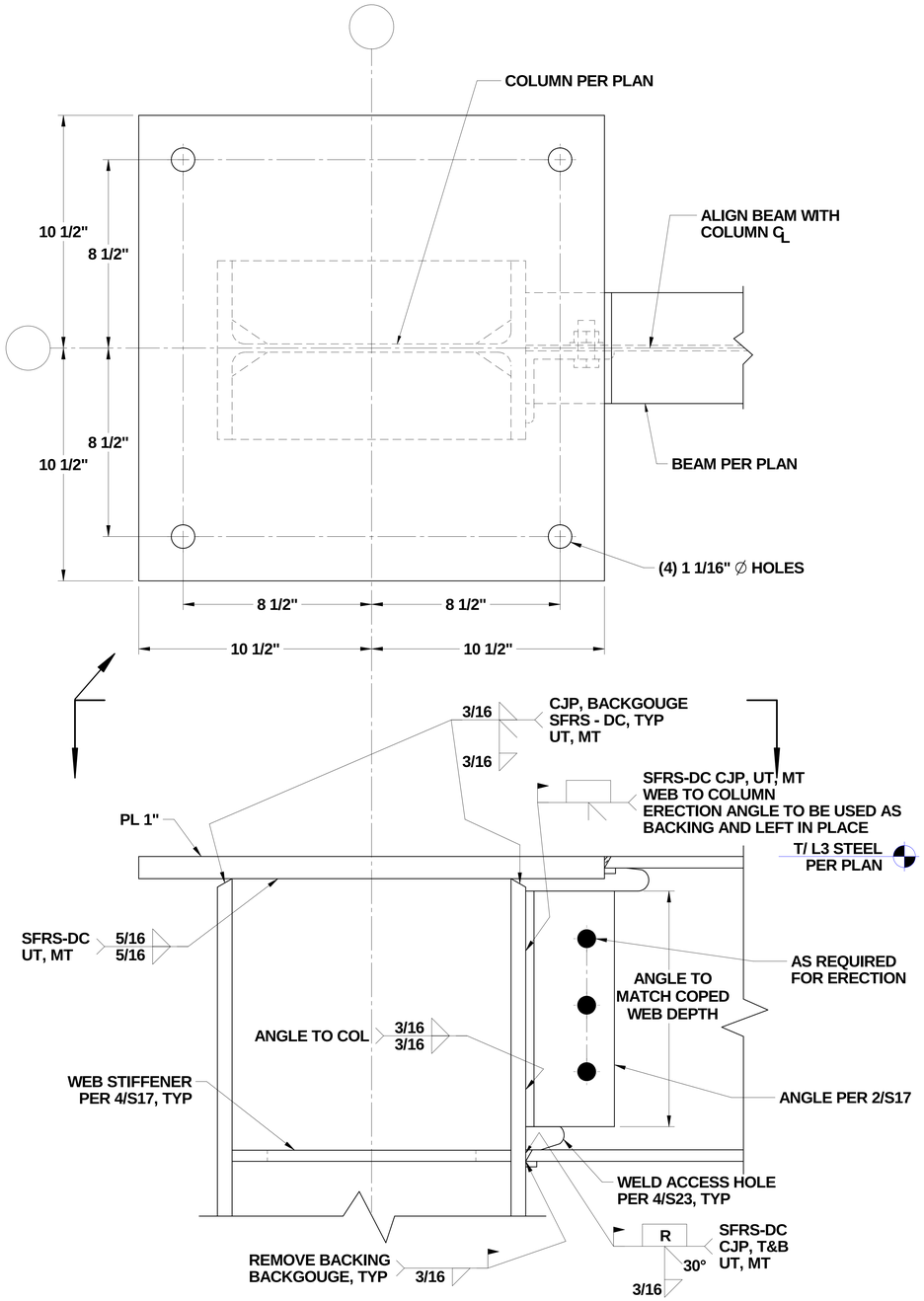

2/22 L3 MOMENT CONNECTION-TO-COLUMN FLANGE

NOTE: FOR INFORMATION NOT SHOWN, REFER TO TYP SHEAR CONNECTION DETAIL.
NOTE: NO WELDING IN THE k-AREA OF THE COLUMN.

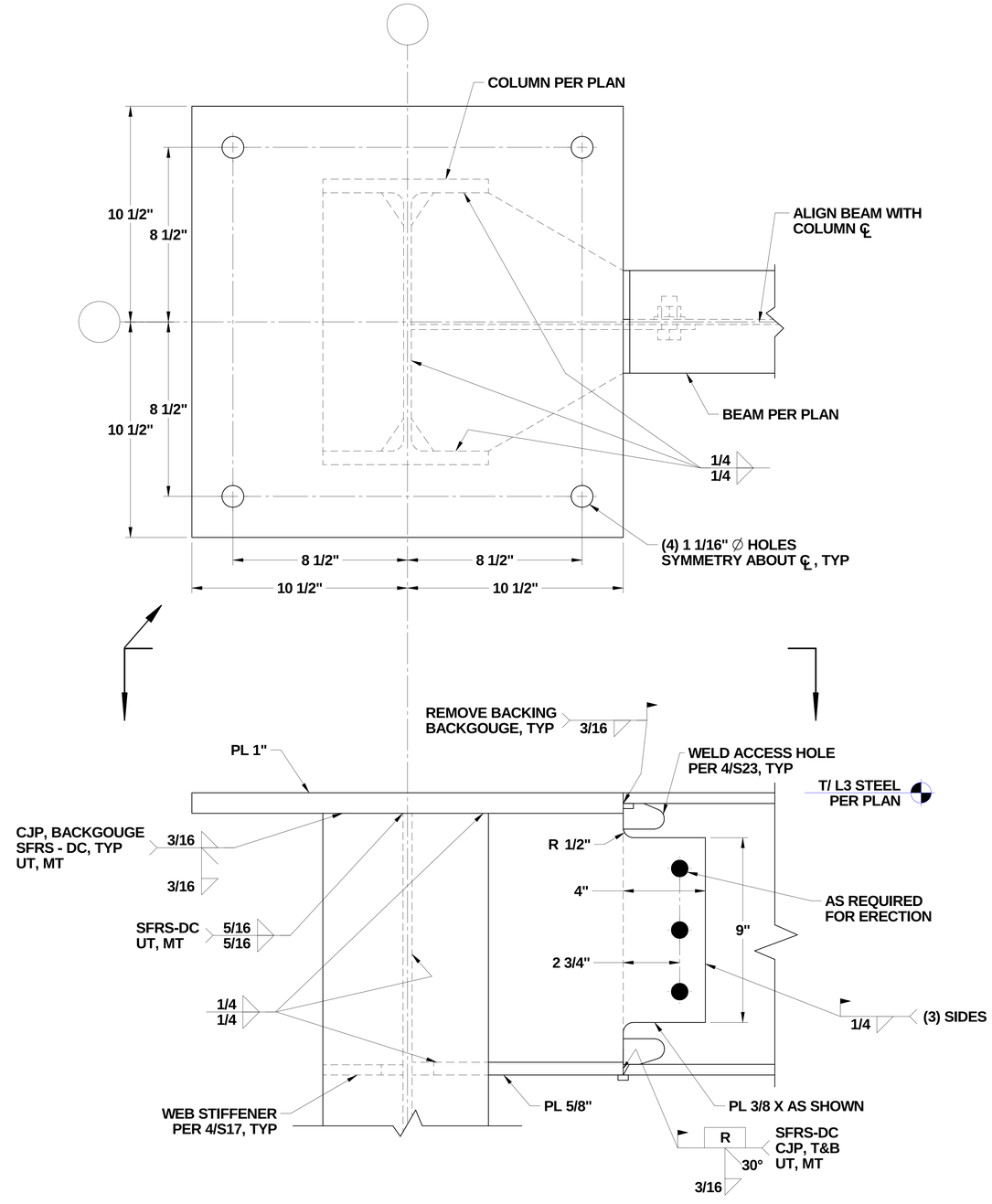

1/22 L3 MOMENT CONNECTION-TO-COLUMN WEB

NOTE: FOR INFORMATION NOT SHOWN, REFER TO TYP SHEAR CONNECTION DETAIL.
NOTE: NO WELDING IN THE k-AREA OF THE COLUMN.

PUGET SOUND NAVAL SHIPYARD
CODE 2370
ENGINEERING DIVISION

NO DEVIATIONS SHALL BE MADE WITHOUT CODE 2370 APPROVAL

DRAWING NO. **2370 - 1832**

TITLE **RAE SUPPORT TOWERS (DD1)**

SCALE N/A | **SHEET 22of 28** | REV. **ORIG**

TITLE DD1 RAE SUPPORT TOWERS
REV. ORIG
SHEET 22
DWG. NO. 2370 - 1832

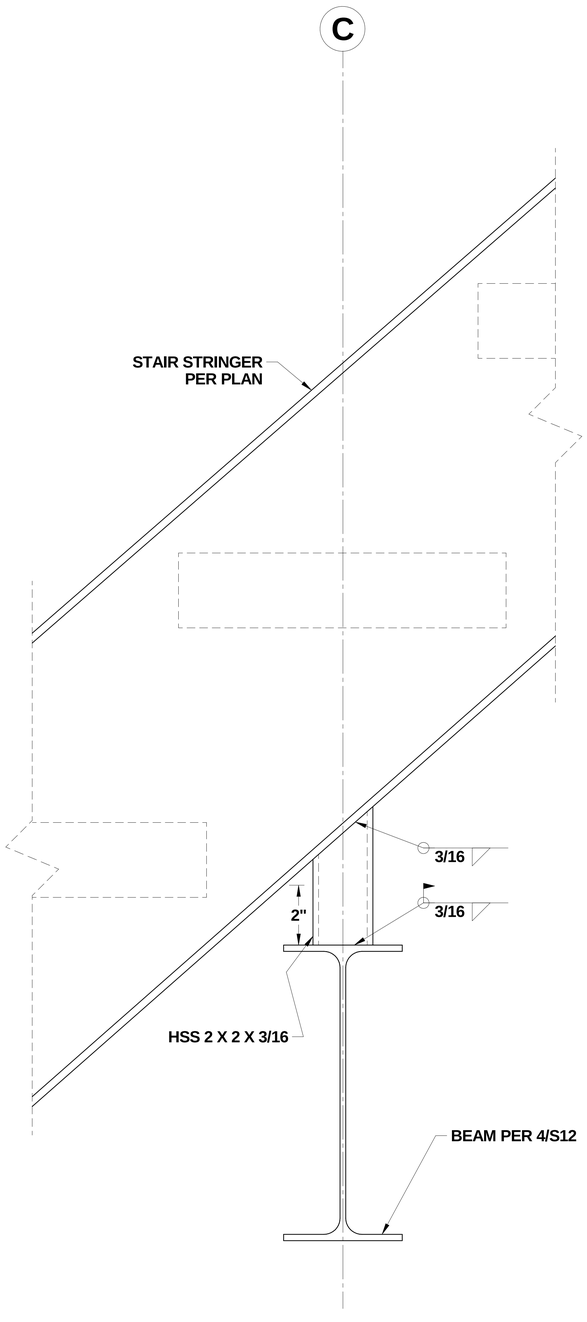

3/23 L0-L1 INTERMEDIATE STAIR SUPPORT

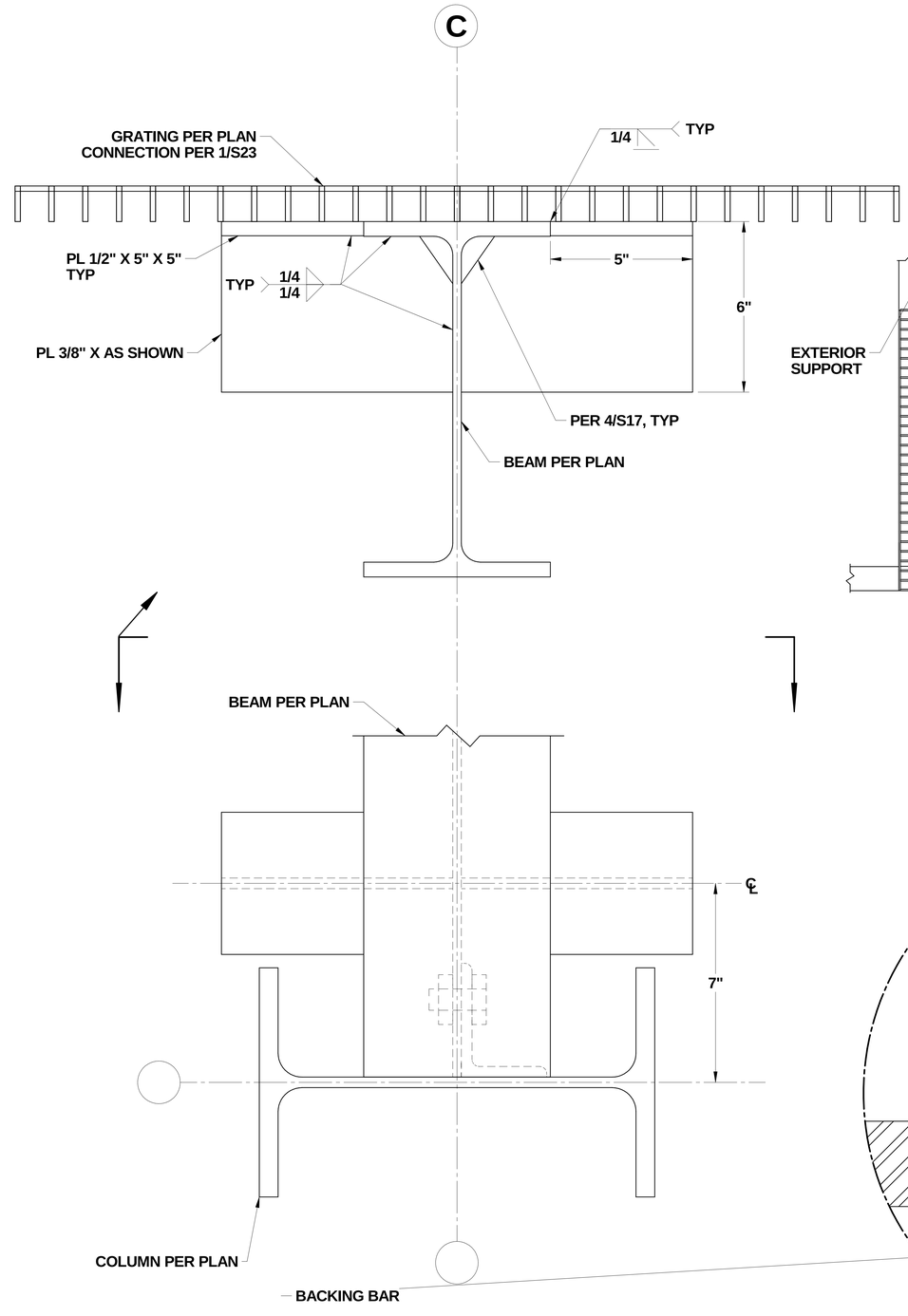

2/23 GRATING SUPPORT AT GRID C COLUMN

NOTE: COLUMN NOT SHOWN IN SECTION FOR CLARITY.

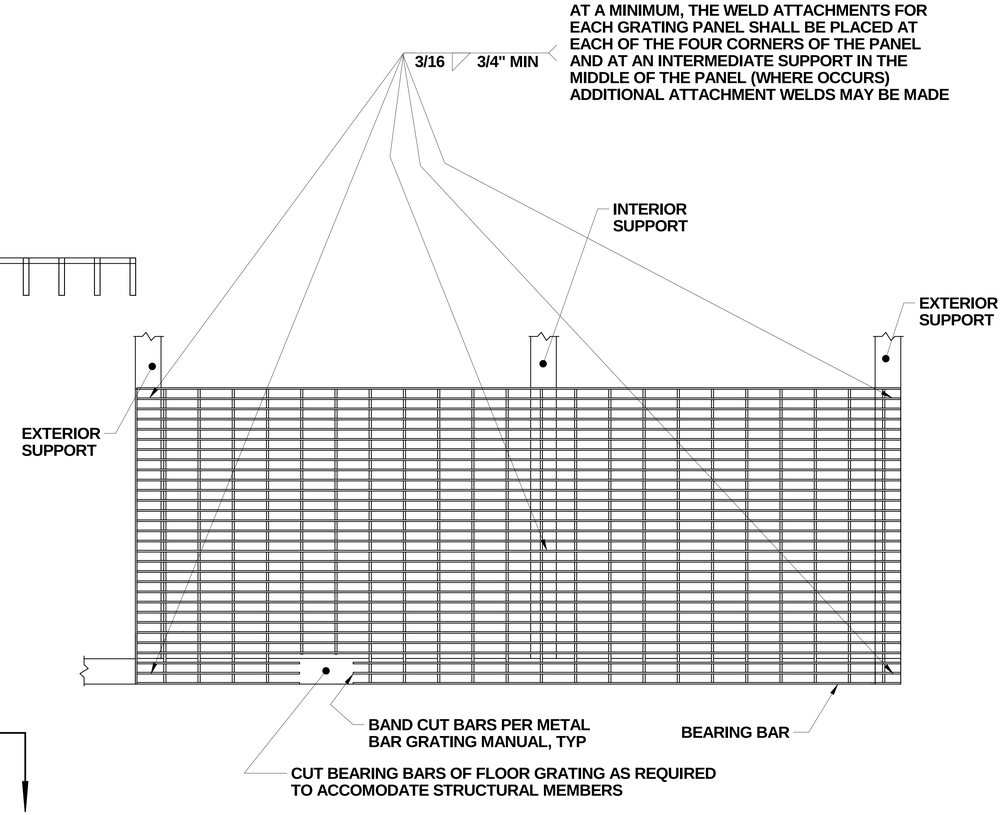

1/23 GRATING CONNECTION DETAIL

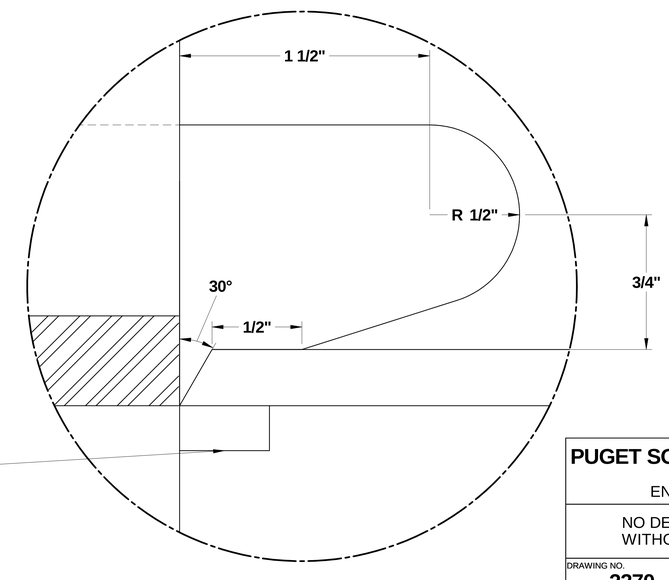

4/23 WELD ACCESS HOLE

NOTE: USE ACCESS HOLE TYPE B. DIMENSIONS IN ACCORDANCE WITH AWS D1.8 / D1.8M SUBCLAUSE 6.10.1.

PUGET SOUND NAVAL SHIPYARD
CODE 2370
ENGINEERING DIVISION

NO DEVIATIONS SHALL BE MADE
WITHOUT CODE 2370 APPROVAL

DRAWING NO. 2370 - 1832

TITLE RAE SUPPORT TOWERS (DD1)

SCALE N/A | SHEET 23of 28 | REV. ORIG

TITLE DD1 RAE SUPPORT TOWERS
REV. ORIG
SHEET 23
DWG. NO. 2370 - 1832

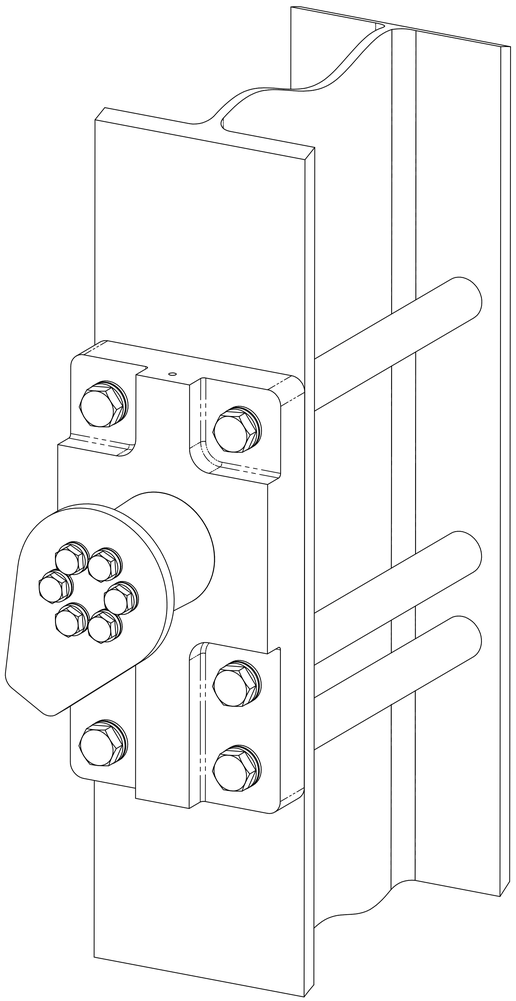

3/24 LIFT LUG - LH

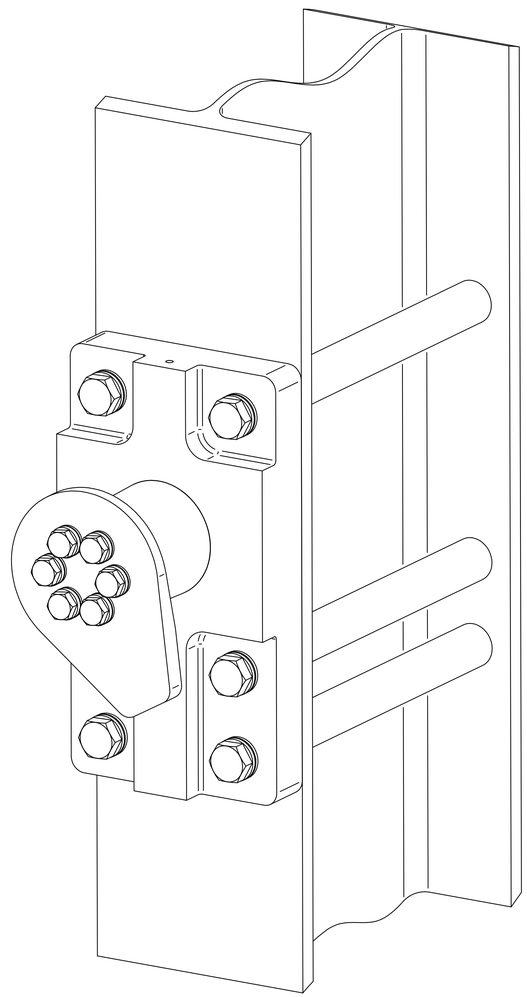

2/24 LIFT LUG - RH

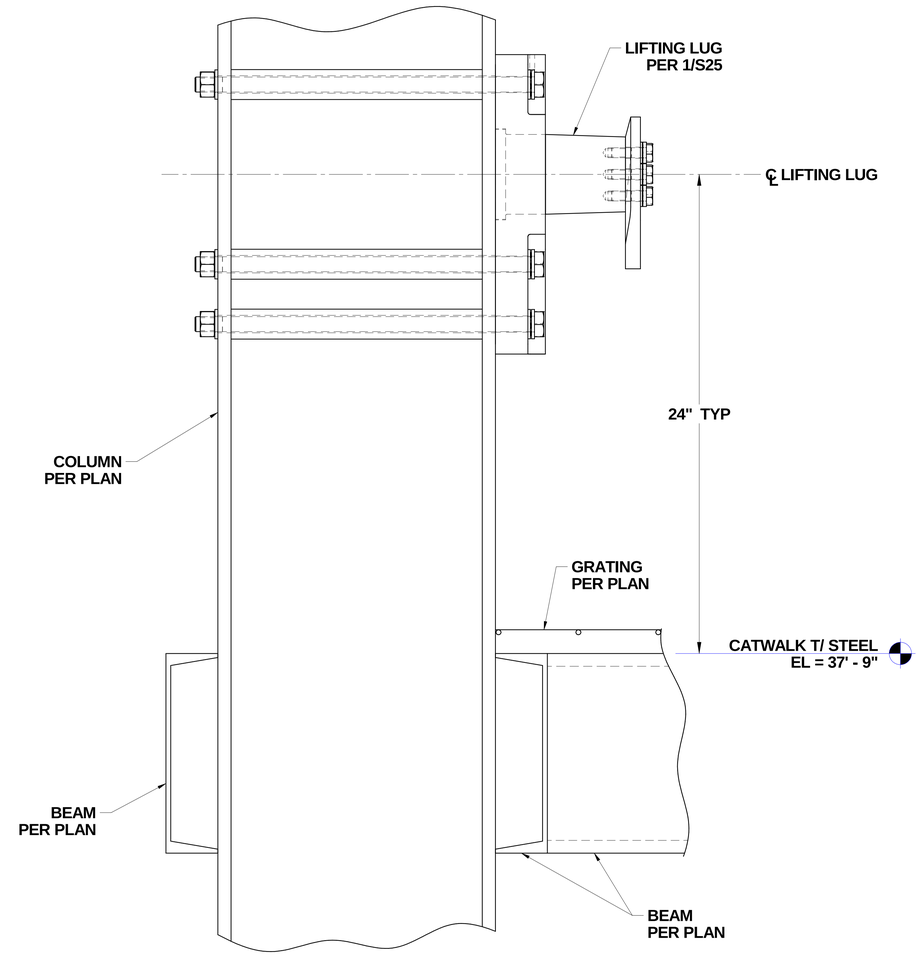

1/24 LIFT LUG PLACEMENT

NOTE: LOCATE HOLES IN COLUMNS PER BASEPLATE DETAIL 1/S26.

PUGET SOUND NAVAL SHIPYARD
CODE 2370
ENGINEERING DIVISION

NO DEVIATIONS SHALL BE MADE WITHOUT CODE 2370 APPROVAL

DRAWING NO. 2370 - 1832

TITLE RAE SUPPORT TOWERS (DD1)

SCALE N/A | SHEET 24of 28 | REV. ORIG

TITLE DD1 RAE SUPPORT TOWERS | REV. ORIG | SHEET 24

DWG. NO. 2370 - 1832

LIFT LUG GENERAL NOTES

1. THIS SECTION OF THE DRAWING PROVIDES INFORMATION SPECIFIC TO MANUFACTURING A BOLT ON LIFT LUG FOR A SUPPORT TOWER.
2. WHERE STANDARDS OR PROCESS INSTRUCTIONS ARE NOTED, THE LATEST REVISIONS SHALL BE IN EFFECT UNLESS A SPECIFIC REVISION IS SPECIFIED.
3. GEOMETRIC DIMENSIONING AND TOLERANCE (GD&T) ARE PER ANSI/ASME Y14.5M-1994.
4. BREAK ALL SHARP EDGES TO A 1/32" CHAMFER (MINIMUM).
5. MATERIAL SUBSTITUTIONS ARE AUTHORIZED ONLY WITH APPROVAL FROM CODE 2370.24 AT PUGET SOUND NAVAL SHIPYARD.
6. THE JOINT BETWEEN THE SHAFT (PC# 1) AND THE BASE PLATE (PC# 2) IS AN ANSI B4.1 CLASS LN 2 INTERFERENCE FIT. THIS JOINT MAY BE ASSEMBLED USING MECHANICAL MEANS SUCH AS A PRESS OR USING A THERMAL PROCESS SUCH AS FREEZING THE SHAFT (PC#1) AND/OR HEATING THE BORE ON THE BASE PLATE (PC#2). IF THE THERMAL PROCESS IS USED, THE TEMPERATURE DIFFERENCE REQUIRED IS APPROXIMATELY 100 DEGREES FAHRENHEIT (I.E. THE BASE PLATE (PC# 2) SHOULD BE 100 DEGREES WARMER THAN THE SHAFT (PC# 1). IF THE BASE PLATE IS HEATED, ENSURE THAT IT IS SLOW COOLED USING AN INSULATED BLANKET.
7. THE 1/2" TAPPED HOLES SHALL BE THREADED SUCH THAT THE FIT IS THE SAME AS REQUIRED FOR HOT-DIPPED GALVANIZED ASTM A325 BOLTS WITH HOT-DIPPED GALVANIZED NUTS PER ASTM A563, PARAGRAPH 7.4.1. ENSURE THAT THREADED HOLES IN THE SHAFT (PC# 1) ARE PROPERLY THREADED / GROOMED USING A TEST BOLT LUBRICATED WITH MOLYKOTE 37 OR EQUIVALENT. FULLY INSERT AND REMOVE A LUBRICATED 1/2" HOT –DIPPED GALVANIZED TEST BOLT FROM EACH TAPPED HOLE IN THE END OF THE SHAFT (PC# 1).
8. **LOAD TEST REQUIREMENTS FOR SAFETY HOIST RING ATTACHMENT HOLE**

   A. PERFORM LOAD TEST ON THE HOIST RING ATTACHMENT HOLE PER REFERENCE C (DWG. 2301-3411). EST. WEIGHT = 95 LBS

   B. CONTRACTOR SHALL PROVIDE WRITTEN DOCUMENTATION THAT THE ABOVE LOAD TEST AND NDT REQUIREMENTS WERE SATISFACTORILY MET.

   C. AFTER SATISFACTORY LOAD TEST, USING A DIE STAMP, MARK THE FOLLOWING INFORMATION ON OR NEAR EACH SAFETY HOIST RING ATTACHMENT HOLE AS SHOWN IN VIEW 1/S25 USING ¼" TALL (MIN) LETTERS:

   LIFT POINT

   GPS CAP: 120 POUNDS

   WEIGHT: XX POUNDS

   TEST DATE: MM-DD-YYYY

9. **LOAD TEST REQUIREMENTS FOR LIFT LUG ASSEMBLY**

   A. WEIGH THE TOWER PER 2370-1835, IF THE WEIGHT EXCEEDS THE CALCULATED WEIGHT ESTIMATES LISTED IN 2370-1835 CONTACT PSNS CODE 2370.24 FOR REVISED LOAD TEST WEIGHTS.

   B. PERFORM LOAD TEST ON THE ASSEMBLED SHAFT AND BASE PLATE BY BOLTING THE BASE PLATE TO A SUITABLE SURFACE USING CONTRACTOR PROVIDED BOLTS THAT ARE EQUIVALENT IN STRENGTH TO ASTM A325 BOLTS. APPLY A LOAD OF 33000 LB + 1100 LB / - 0 LB TO THE END OF THE SHAFT (PC# 1) ORIENTED AS SHOWN IN VIEW 1/S25 USING A HYDRAULIC JACK, WIRE ROPE, OR OTHER MEANS. HOLD THE TEST LOAD FOR A MINIMUM OF TEN MINUTES.

   C. AFTER THE LOAD TEST, PERFORM A VISUAL INSPECTION (VT) AND A MAGNETIC PARTICLE INSPECTION (MT) OF THE BASE PLATE / SHAFT ASSEMBLY PER REFERENCE A (NAVSEA T9074-AS-GIB-010/271). ACCEPTANCE CRITERIA FOR THE VT AND MT SHALL BE PER REFERENCE B (MIL-STD-2035).

   D. CONTRACTOR SHALL PROVIDE WRITTEN DOCUMENTATION THAT THE ABOVE LOAD TEST AND NDT REQUIREMENTS WERE SATISFACTORILY MET. ON THE WRITTEN DOCUMENTATION, SERIALIZE THE LIFT LUGS, LABELING THEM LIFT LUG – 1 THROUGH LIFT LUG – 8.

   E. AFTER SATISFACTORY LOAD TEST, USING A DIE STAMP, MARK THE FOLLOWING INFORMATION ON THE FACE OF THE BASE PLATE AS SHOWN IN VIEW 1/S25 USING ¼" TALL (MIN) LETTERS:

   LIFT LUG – X

   DRAWING NO. 2370-1832

   GPS CAP: 22,000 POUNDS

   (ENGINEERED FOR A 4 POINT LIFT)

   TEST DATE: MM-DD-YYYY

REFERENCES

A. NAVSEA TECHNICAL PUBLICATION T9074-AS-GIB-010/271, REQUIREMENTS FOR NONDESTRUCTIVE TESTING METHODS

B. MIL-STD-2035 NONDESTRUCTIVE TESTING ACCEPTANCE CRITERIA

C. PSNS DWG. 2301-3411, TORQUE-BASED PROOF TEST FOR SAFETY HOIST RING LIFT HOLES.

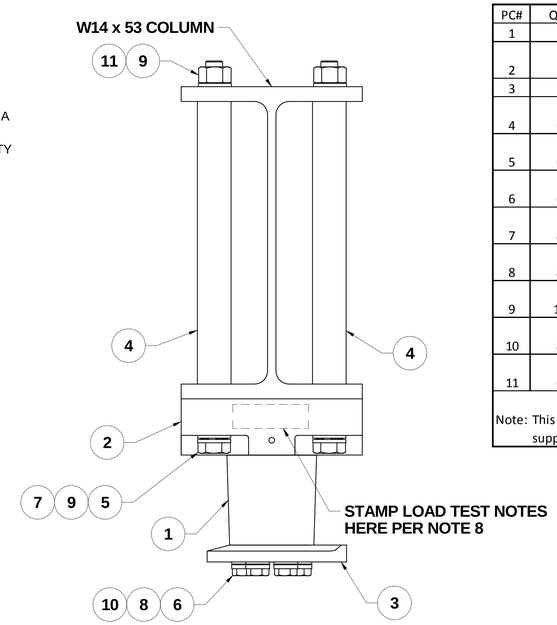

PC#	QTY	Description & Size	Material	Material Spec	Sheet	Comments
1	1	Shaft	Steel	AISI 4140 Cold Finished	26	Minimum Yield Strength 90 ksi.
2	1	Base Plate	Steel	ASTM A656 Gr. 80 OR MIL-S-16216, HY-80	26	Minimum Yield Strength 80 ksi.
3	1	Retainer Plate	Steel	ASTM A572 Grade 50	27	
4	6	DOM Spacer Tube	Steel	ASTM A513, Type DOM, Grade 1010/1020	27	Minimum Yield Strength 50 ksi.
5	6	Bolt, Heavy Hex 3/4"-10 UNC x 17" lg	Galvanized Steel	ASTM A325, Type 1	--	Hot Dip Galvanized per ASTM F2329
6	6	Bolt, Heavy Hex 1/2"-13 UNC x 1-3/4" lg	Galvanized Steel	ASTM A325, Type 1	--	Hot Dip Galvanized per ASTM F2329
7	8	Direct Tension Indicating Washer for 3/4" ASTM A325 bolt	Galvanized Steel	ASTM F959	--	Squirter Type. Galvanized per Class 50 of ASTM B695
8	8	Direct Tension Indicating Washer for 1/2" ASTM A325 bolt	Galvanized Steel	ASTM F959	--	Squirter Type. Galvanized per Class 50 of ASTM B695
9	16	Hardened Flat Washer for 3/4" bolt	Galvanized Steel	ASTM F436, Type 1	--	Hot Dip Galvanized
10	8	Hardened Flat Washer for 1/2" bolt	Galvanized Steel	ASTM F436, Type 1	--	Hot Dip Galvanized
11	6	NUT, HEX 3/4"-10 UNC	Galvanized Steel	ASTM A563, Type DH	--	Hot Dip Galvanized per ASTM F2329

Note: This parts list is for one complete lift lug assembly (including spare washers). A total of eight of these lift lug assemblies are required for the two RAE support towers. The total quantity of material required is eight times the quantities listed in the table above.

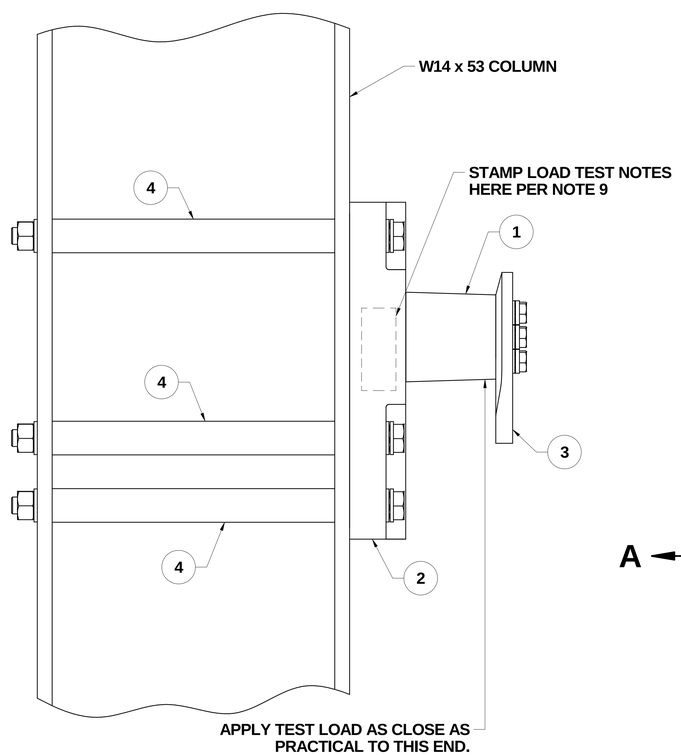

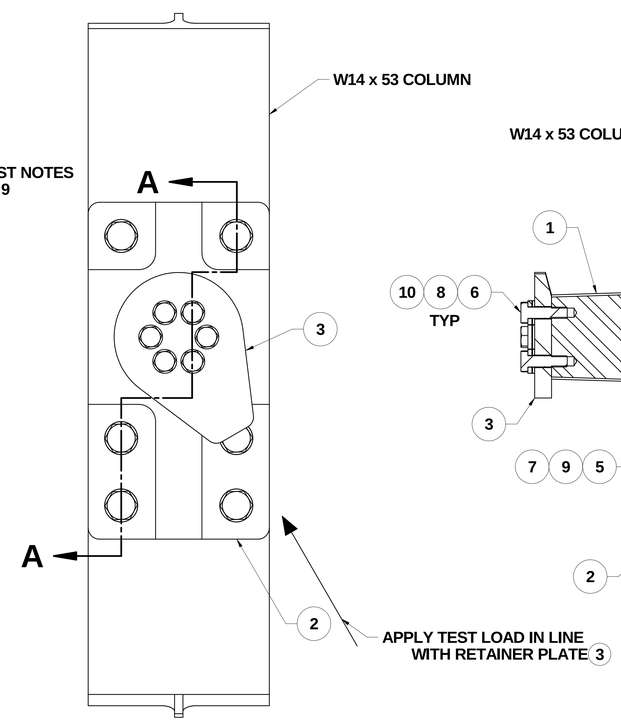

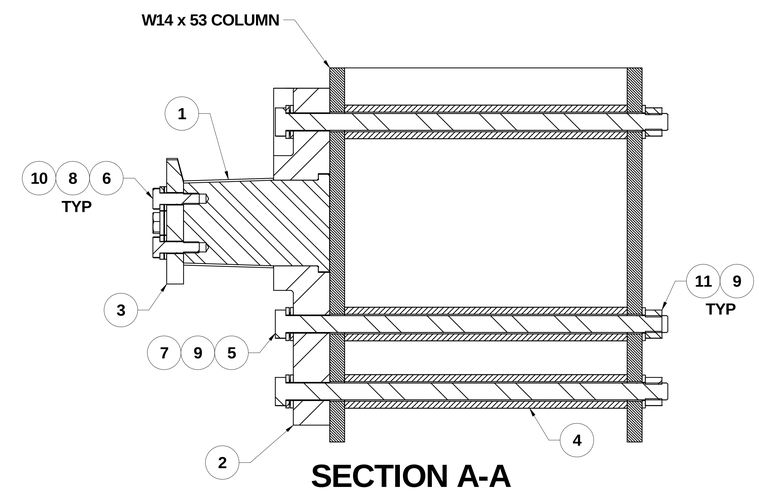

1/25 **LIFT LUG ARRANGEMENT (RH SHOWN)**

LH SAME EXCEPT THE RETAINER PLATE IS ROTATED TO THE LEFT.

PUGET SOUND NAVAL SHIPYARD
CODE 2370
ENGINEERING DIVISION

NO DEVIATIONS SHALL BE MADE WITHOUT CODE 2370 APPROVAL

DRAWING NO. **2370 - 1832**

TITLE **RAE SUPPORT TOWERS (DD1)**

SCALE N/A | **SHEET 25of 28** | REV. **ORIG**

TITLE DD1 RAE SUPPORT TOWERS | REV. ORIG | SHEET 25

DWG. NO. 2370 - 1832

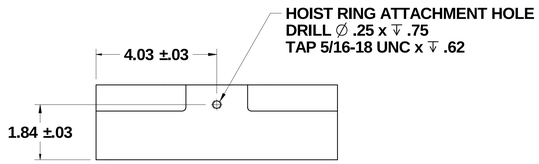

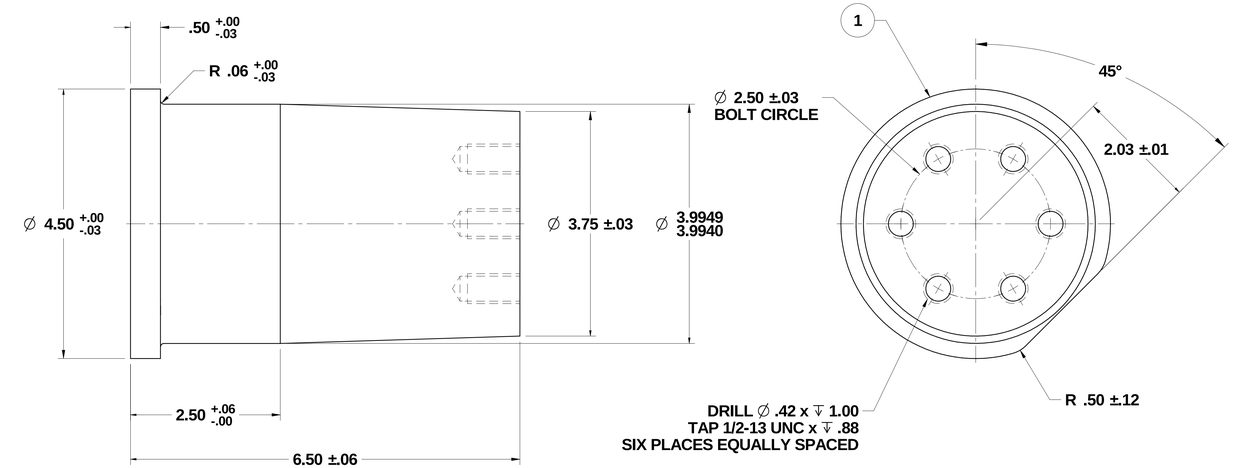

2/26 SHAFT DETAIL

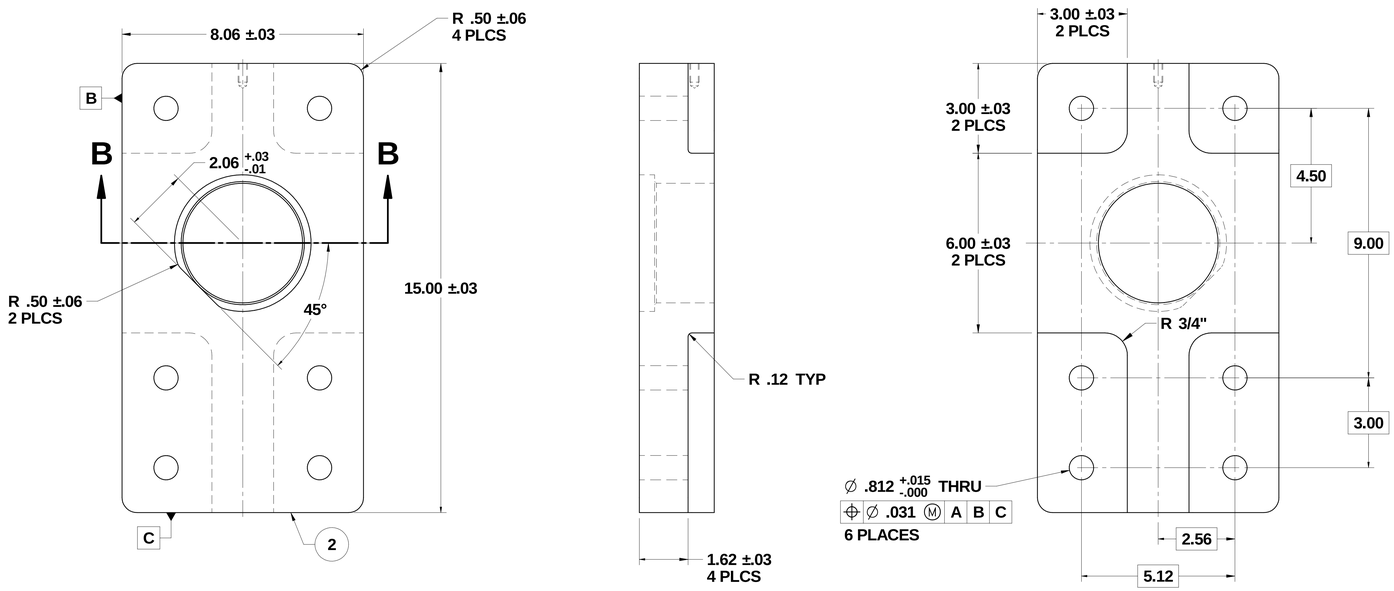

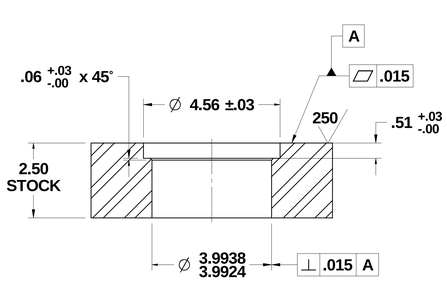

SECTION B-B

1/26 BASEPLATE DETAIL

PUGET SOUND NAVAL SHIPYARD
CODE 2370
ENGINEERING DIVISION

NO DEVIATIONS SHALL BE MADE
WITHOUT CODE 2370 APPROVAL

DRAWING NO. **2370 - 1832**

TITLE **RAE SUPPORT TOWERS (DD1)**

SCALE N/A | **SHEET 26of 28** | REV. **ORIG**

TITLE DD1 RAE SUPPORT TOWERS
REV. ORIG
SHEET 26
DWG. NO. 2370 - 1832

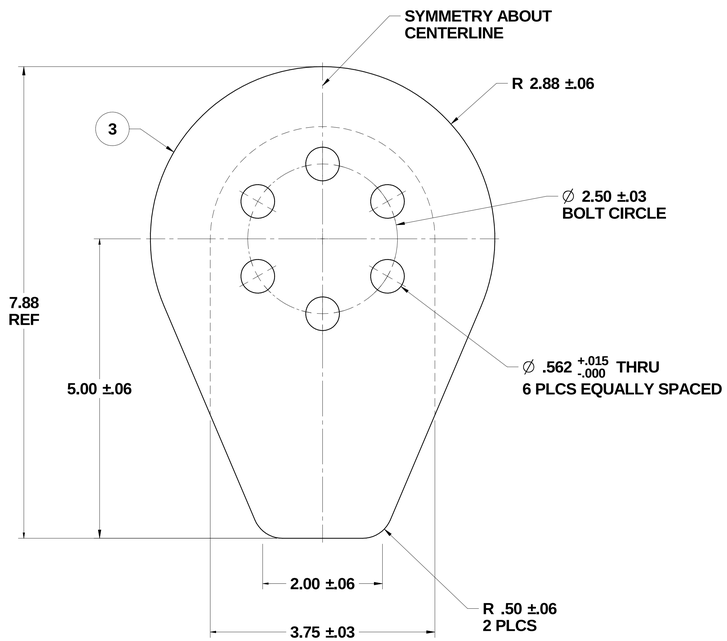

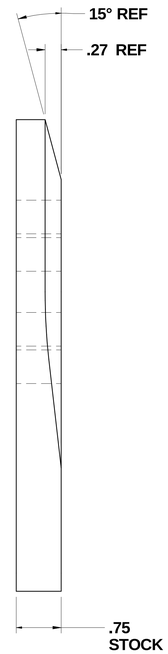

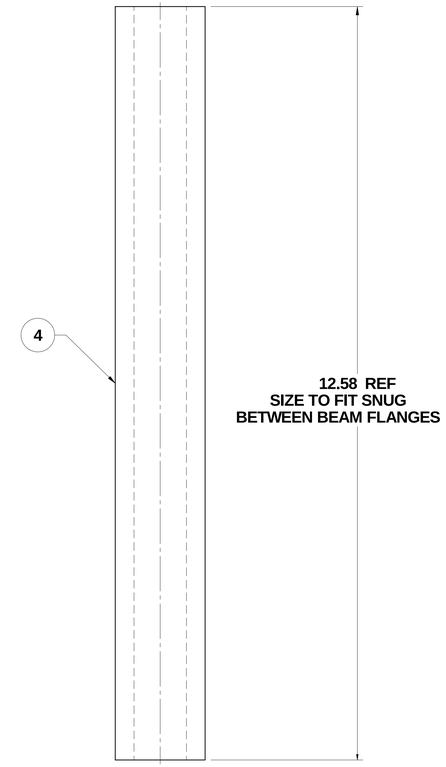

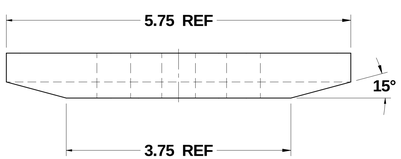

1/27 **RETAINER PLATE DETAIL**

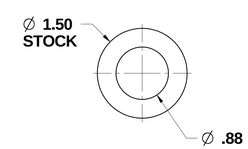

2/27 **SPACER TUBE DETAIL**

PUGET SOUND NAVAL SHIPYARD
CODE 2370
ENGINEERING DIVISION

NO DEVIATIONS SHALL BE MADE
WITHOUT CODE 2370 APPROVAL

DRAWING NO. **2370 - 1832**

TITLE **RAE SUPPORT TOWERS (DD1)**

SCALE N/A | **SHEET 27of 28** | REV. **ORIG**

TITLE DD1 RAE SUPPORT TOWERS
REV. ORIG
SHEET 27
DWG. NO. 2370 - 1832

TOWER STRUCTURE

INSPECTION PROCEDURE FOR CRITICAL DIMENSIONS

1. PLACE THE TOWERS ON A LEVEL SURFACE.
2. EVALUATE THE CORNER SUPPORT COLUMNS OF EACH TOWER AND ENSURE THAT EACH INSTALLED COLUMN IS ALIGNED SUCH THAT THE VARIATION IN STRAIGHTNESS MEASURED FROM THE BASE OF THE TOWER TO THE TOP OF THE TOWER IS LESS THAN 1/1000TH OF THE AXIAL LENGTH (ABOUT 9/16" OVER THE ASSEMBLED COLUMN HEIGHT).
3. MEASURE THE DIMENSIONS INDICATED IN THE TABLE. ALL DIMENSIONS ARE FROM GRIDLINE TO GRIDLINE.
4. RECORD MEASUREMENTS IN A TABLE SIMILAR TO THE TABLE SHOWN BELOW. ENSURE THAT THE TOWER # IS CLEARLY MARKED ON THE TABLE. USE THE SAME LABELING SYSTEM AS USED FOR LABELING THE TOWERS SHOWN IN DRAWING 2370-1835 PARAGRAPH 9.C.
5. ALL MEASUREMENTS MUST BE RECORDED IN THE TABLE AND THE TABLE MUST BE VALIDATED AND SIGNED BY A THIRD PARTY INSPECTOR PROVIDING QUALITY ASSURANCE (QA) CERTIFYING COMPLIANCE TO THE REQUIREMENTS OF THIS PROCEDURE AND DIMENSIONAL REQUIREMENTS OF THE DRAWING. PROVIDE PHOTOGRAPHS OF THE INSPECTION CONFIGURATION WITH THE SIGNED TABLES.

TOWER STRUCTURE INSPECTION TABLE - ALL DIMENSIONS ARE IN INCHES			
TOWER #:			
LOCATION	ALLOWED MINIMUM	ALLOWED MAXIMUM	ACTUAL MEASURED
GROUND DIMENSIONS			
DIMENSION GA	150.9375	151.0625	
DIMENSION GB	150.9375	151.0625	
DIMENSION GC	338.9360	339.0610	
DIMENSION GD	338.9360	339.0610	
LEVEL 3 DIMENSIONS			
DIMENSION L3A	150.9375	151.0625	
DIMENSION L3B	150.9375	151.0625	
DIMENSION L3C	338.9360	339.0610	
DIMENSION L3D	338.9360	339.0610	

AUTHORIZED QA INSPECTOR NAME: _____

AUTHORIZED QA INSPECTOR SIGNATURE: _____

DATE OF SIGNATURE: _____

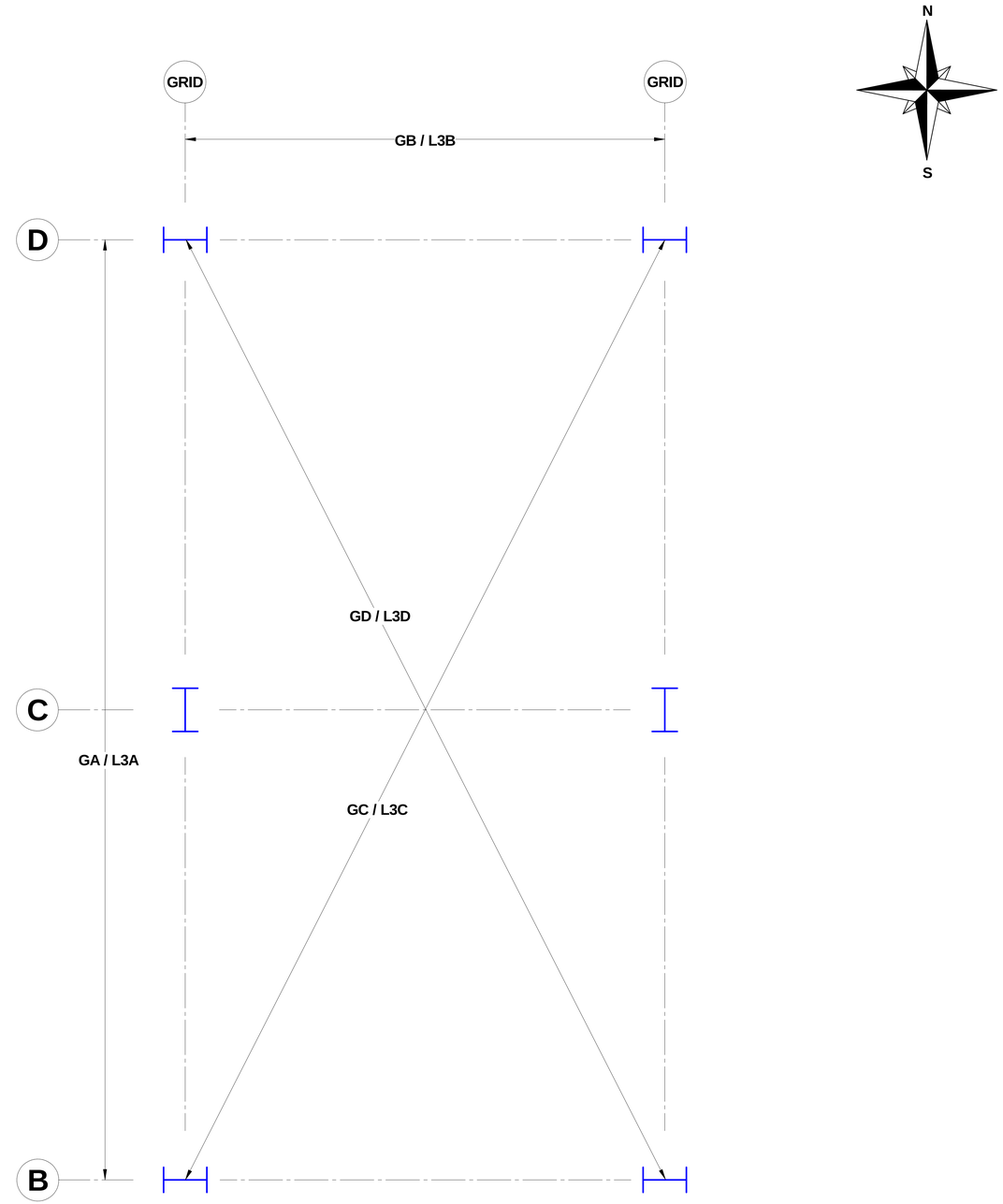

PUGET SOUND NAVAL SHIPYARD
CODE 2370
ENGINEERING DIVISION

NO DEVIATIONS SHALL BE MADE WITHOUT CODE 2370 APPROVAL

DRAWING NO. **2370 - 1832**

TITLE **RAE SUPPORT TOWERS (DD1)**

SCALE N/A | **SHEET 28of 28** | REV. **ORIG**

TITLE DD1 RAE SUPPORT TOWERS | REV. ORIG | SHEET 28

DWG. NO. 2370 - 1832

GENERAL NOTES

1. DRAWING PSNS 2370-1835 PROVIDES GENERAL NOTES AND SPECIFICATIONS TO BE USED WITH PSNS DWG 2370-1830, PSNS DWG 2370-1831, PSNS DWG 2370-1832, AND PSNS DWG 2370-1833.
2. THE FOLLOWING DRAWINGS ARE TO BE UTILIZED TO INSTALL THE RAE SUPPORT SYSTEM AT DRY DOCK 5: PSNS DRAWING 2370-1831 RAE BRIDGE, PSNS DRAWING 2370-1833 RAE TOWERS, PSNS DRAWING 2370-1834 RAE TOWER / RAE BRIDGE BEARING, AND PSNS DRAWING 2370-1835 RAE SUPPORT TOWER AND BRIDGE STRUCTURAL REQUIREMENTS.
3. INFORMATION SPECIFIC TO THE FABRICATION OF THE TOWER LIFTING LUGS IS PROVIDED ON SHEET 25.
4. SFRS INDICATES A WELD ON THE SEISMIC FORCE RESISTING SYSTEM THAT IS NOT DEMAND CRITICAL.
5. SFRS-DC INDICATES A WELD ON THE SEISMIC FORCE RESISTING SYSTEM THAT IS DEMAND CRITICAL.
6. WITH THIS DRAWING A SET OF TOWERS SHALL BE CONSTRUCTED; AN EAST TOWER AND A WEST TOWER.
7. THE WEST TOWER IS A MIRROR COPY OF THE EAST TOWER, FOR INFORMATION NOT SHOWN ON THE WEST TOWER, REFERENCE THE EAST TOWER.
8. FOR EACH TOWER, THE FOLLOWING CONNECTIONS SHALL BE FABRICATED PER DRAWING 2370-1834:
   - **A.** BEARING ARRANGEMENT 1: QUANTITY (4)
   - **B.** BEARING ARRANGEMENT 2: QUANTITY (2)

SYMBOL LEGEND

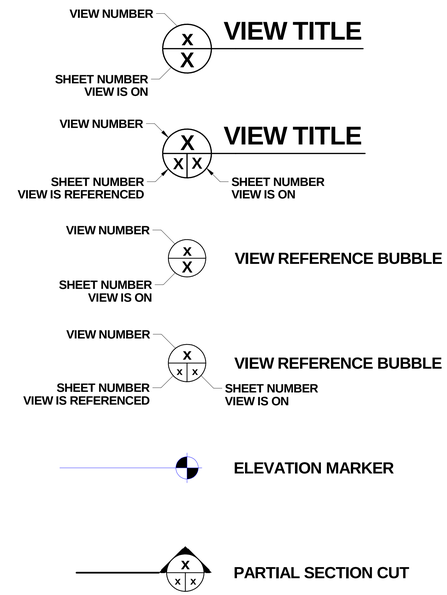

REVISIONS					
SYMB	REV	DESCRIPTION	DATE	CHANGE BY	APPROVAL
A	A				
B	B				
C	C				
D	D				

ABBREVIATIONS

ADJ	- ADJUSTABLE	MIN	- MINIMUM
B/	- BOTTOM OF	O.C.	- ON CENTER
BP	- BASE PLATE	PL	- PLATE
BRB	- BUCKLING RESTRAINED BRACE	REQ'D	- REQUIRED
CJP	- COMPLETE JOINT PENETRATION	SC	- SLIP CRITICAL
CL OR ℄	- CENTERLINE	SCH	- SCHEDULE
COL	- COLUMN	SFRS	- SEISMIC FORCE RESISTING SYSTEM
DC	- DEMAND CRITICAL	SFRS-DC	- SEISMIC FORCE RESISTING SYSTEM, DEMAND CRITICAL
ELEV	- ELEVATION	SIM	- SIMILAR
EL	- ELEVATION	SST	- STAINLESS STEEL
GA.	- GAUGE	STL	- STEEL
HORIZ	- HORIZONTAL	T&B	- TOP AND BOTTOM
ISO	- ISOMETRIC	T/	- TOP OF
MAX	- MAXIMUM	TYP	- TYPICAL
MFR	- MANUFACTURER	UNO	- UNLESS NOTED OTHERWISE

DISTRIBUTION STATEMENT: N/A

A.D.C. REVIEW

	SIGNATURE	DATE
	J. BYRNES /S/	**11/12/14**

CONCURRENCE

CODE	SIGNATURE	DATE

/S/ SIGNATURE ON FILE **APPROVAL**

	SIGNATURE	DATE
BRANCH SUPV.	**J. BYRNES /S/**	**11/12/14**
CHECKED	**K. BOTTELBERGHE /S/**	**11/12/14**
DRAWN	**B. MEACHAM /S/**	**11/12/14**
DRAWN		
DESIGNED		
FILE PATH		

PUGET SOUND NAVAL SHIPYARD
CODE 2370
ENGINEERING DIVISION

NO DEVIATIONS SHALL BE MADE
WITHOUT CODE 2370 APPROVAL

DRAWING NO. **2370 - 1833**

TITLE **RAE SUPPORT TOWERS (DD5)**

SCALE N/A | **SHEET 1 of 28** | REV. **ORIG**

SHEET 1 | REV. ORIG | TITLE DD1 RAE SUPPORT TOWERS | DWG. NO. 2370 - 1833

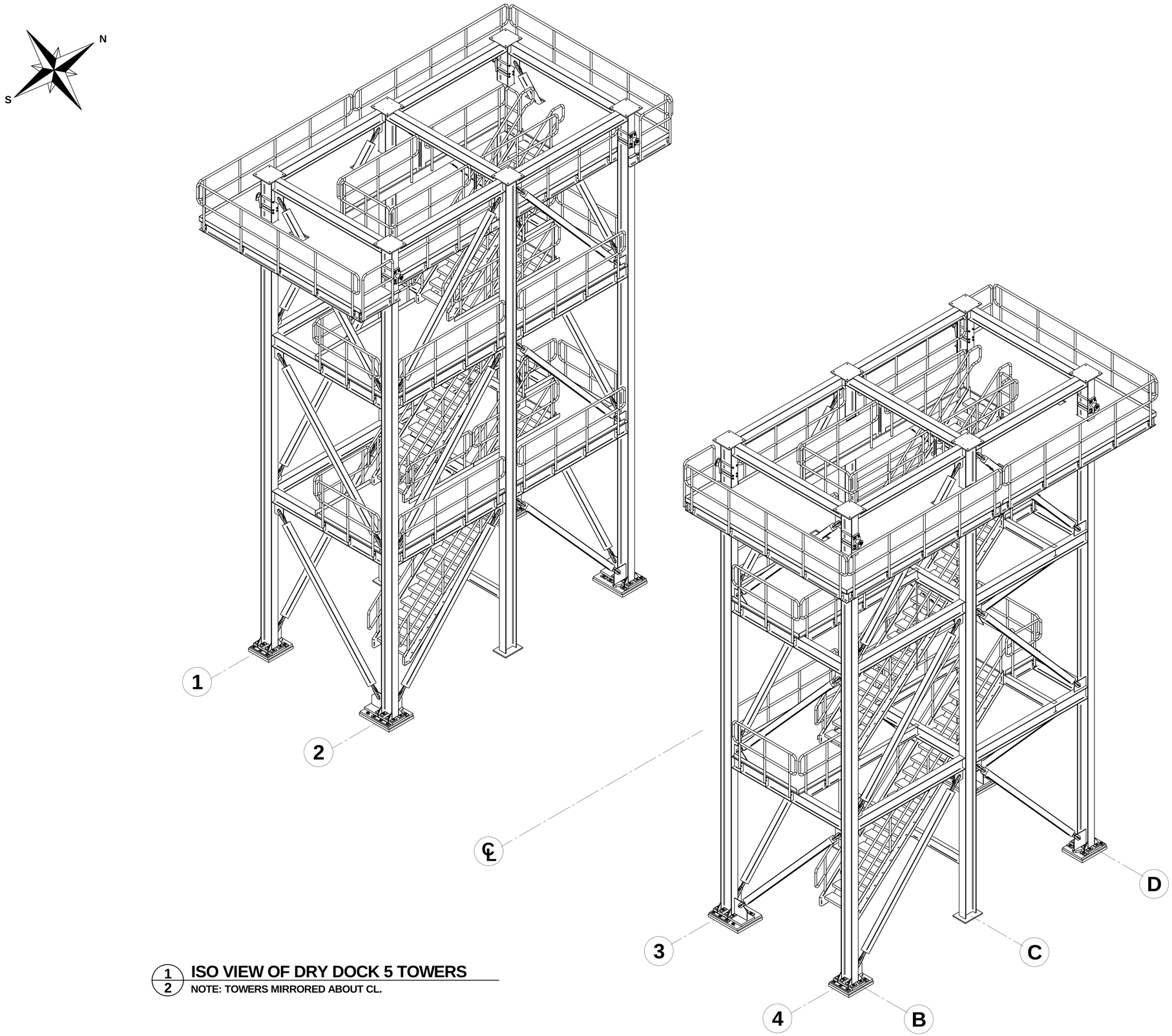

1/2 **ISO VIEW OF DRY DOCK 5 TOWERS**

NOTE: TOWERS MIRRORED ABOUT CL.

PUGET SOUND NAVAL SHIPYARD
CODE 2370
ENGINEERING DIVISION

NO DEVIATIONS SHALL BE MADE
WITHOUT CODE 2370 APPROVAL

DRAWING NO. **2370 - 1833**

TITLE **RAE SUPPORT TOWERS (DD5)**

SCALE N/A | **SHEET 2 of 28** | REV. **ORIG**

TITLE DD5 RAE SUPPORT TOWERS

REV. ORIG SHEET 2

DWG. NO. 2370 - 1833

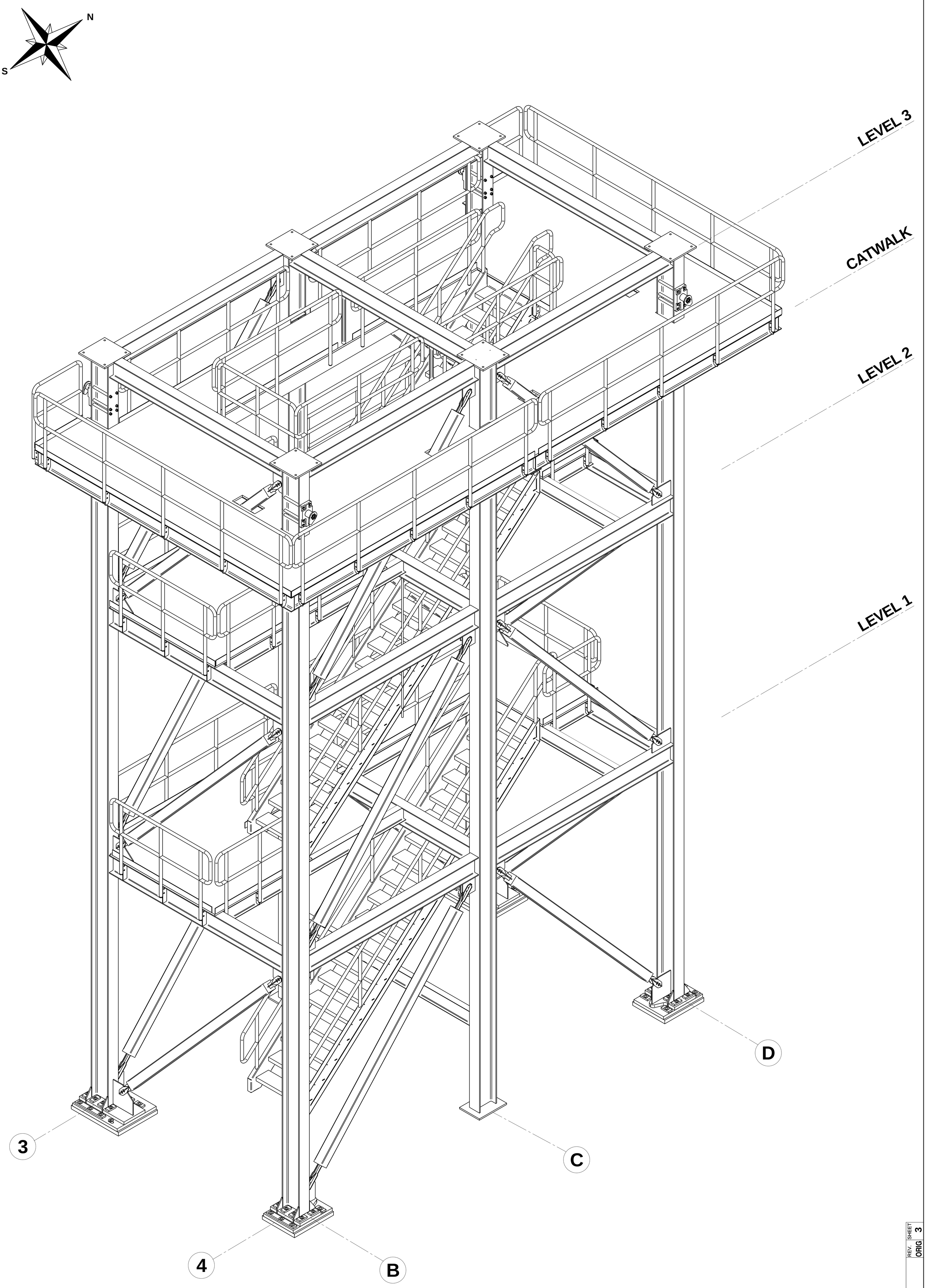

1/3 ISO VIEW OF EAST TOWER

PUGET SOUND NAVAL SHIPYARD
CODE 2370
ENGINEERING DIVISION

NO DEVIATIONS SHALL BE MADE
WITHOUT CODE 2370 APPROVAL

DRAWING NO. **2370 - 1833**

TITLE **RAE SUPPORT TOWERS (DD5)**

SCALE		REV.
N/A	**SHEET 3 of 28**	**ORIG**

SHEET 3 | REV. ORIG | TITLE DD5 RAE SUPPORT TOWERS | DWG. NO. 2370 - 1833

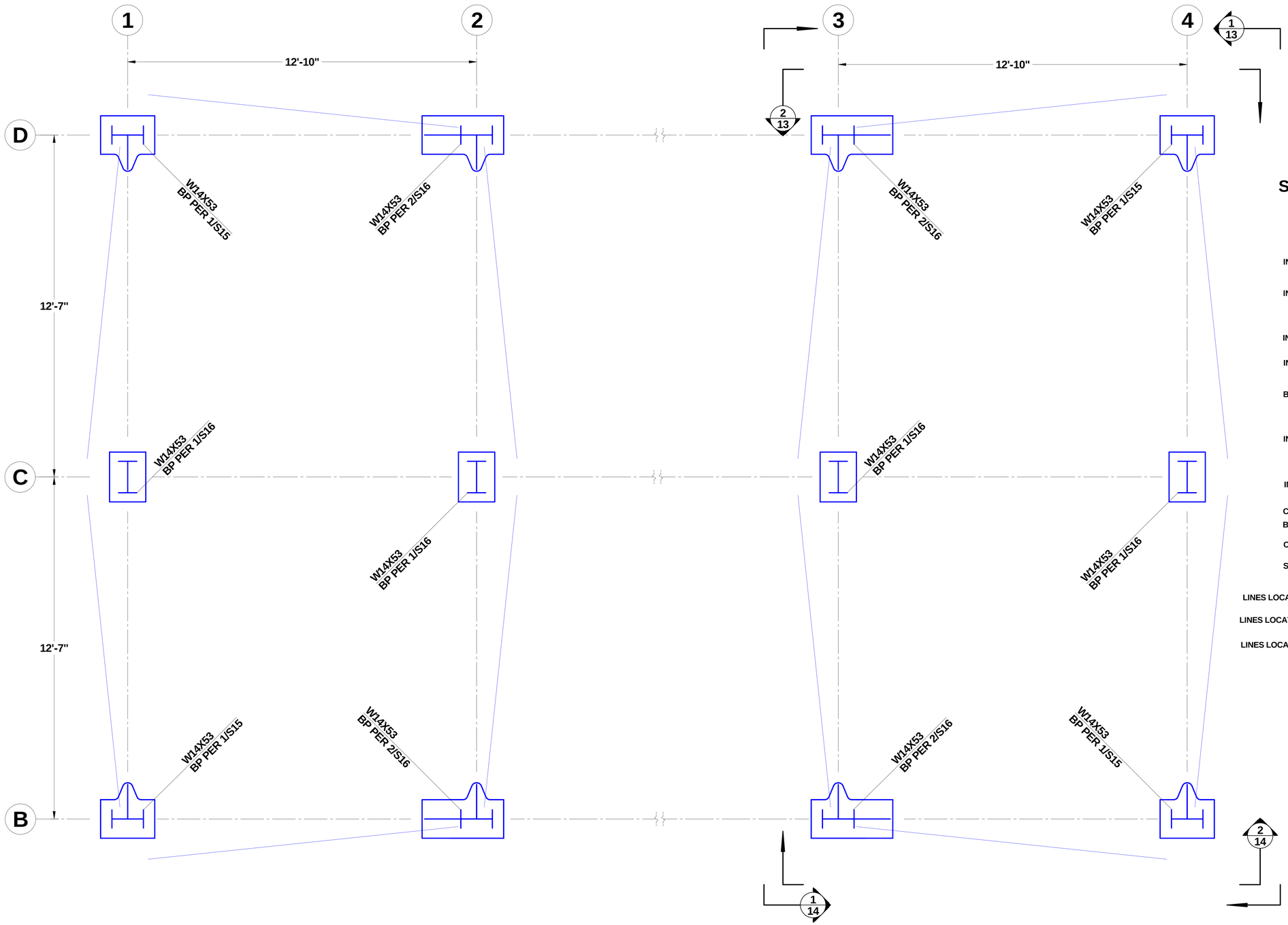

1/4 GROUND LEVEL STRUCTURAL PLAN

B/ BASEPLATE ELEV = 0' - 0"

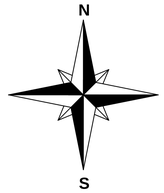

STRUCTURAL STEEL LEGEND (PLAN VIEWS)

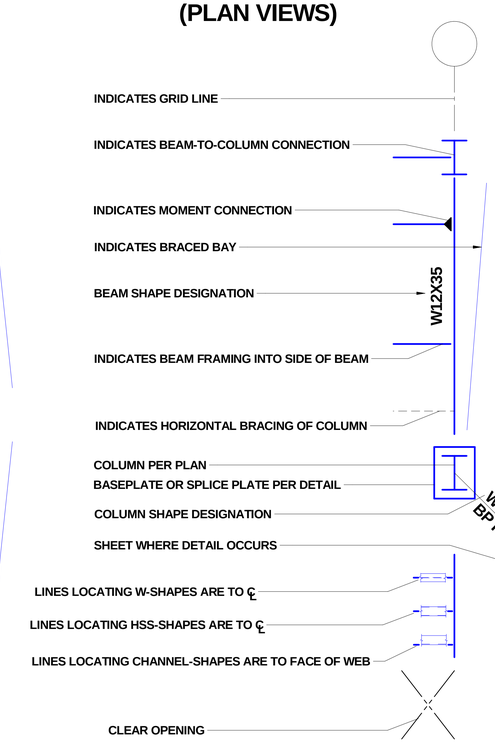

PUGET SOUND NAVAL SHIPYARD
CODE 2370
ENGINEERING DIVISION

NO DEVIATIONS SHALL BE MADE
WITHOUT CODE 2370 APPROVAL

DRAWING NO. **2370 - 1833**

TITLE **RAE SUPPORT TOWERS (DD5)**

SCALE N/A | **SHEET 4 of 28** | REV. **ORIG**

TITLE DD5 RAE SUPPORT TOWERS | REV. ORIG | SHEET 4

DWG. NO. 2370 - 1833

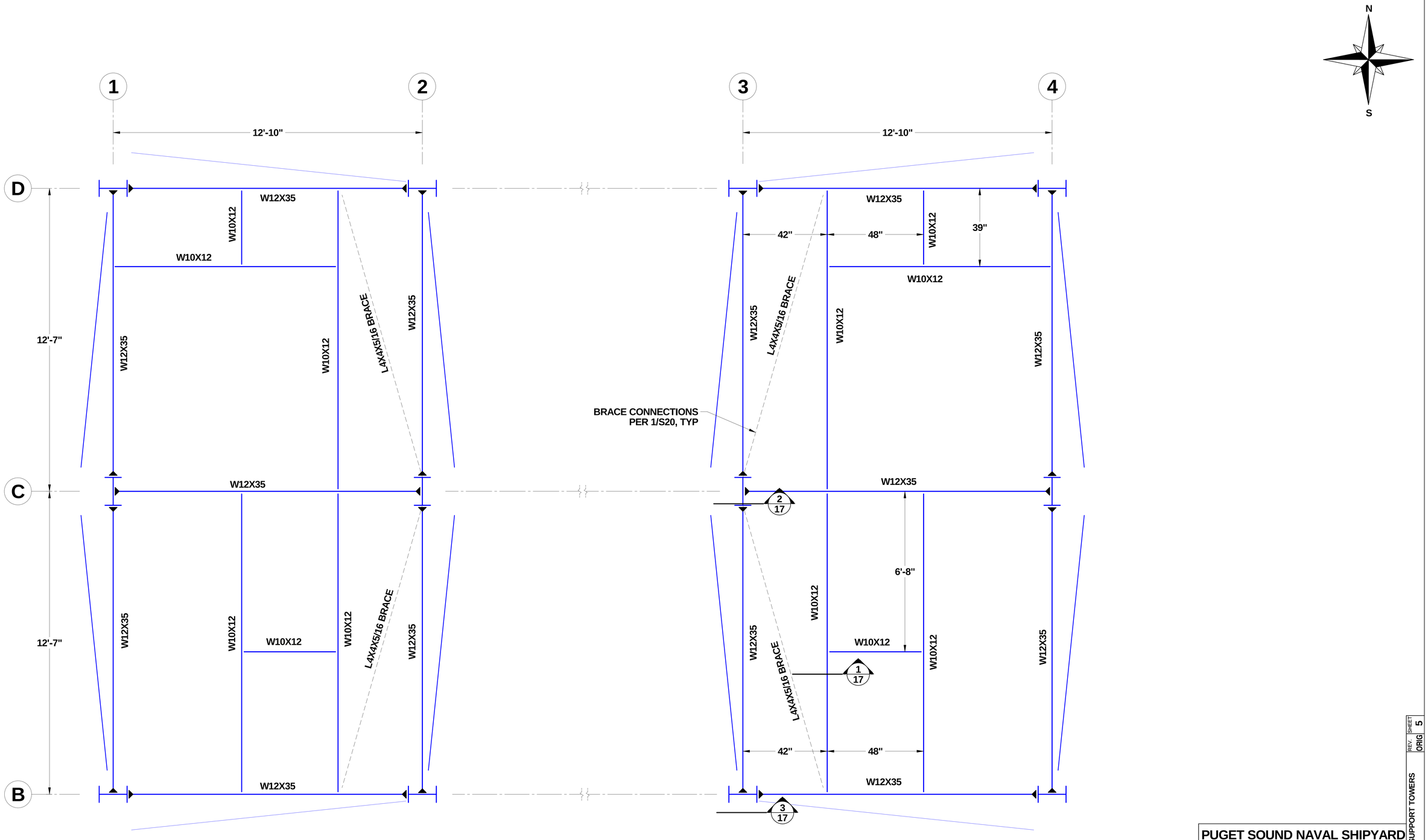

1/5 **LEVEL 1 STRUCTURAL PLAN**

T/ STEEL EL = 14' - 11"

PUGET SOUND NAVAL SHIPYARD
CODE 2370
ENGINEERING DIVISION

NO DEVIATIONS SHALL BE MADE
WITHOUT CODE 2370 APPROVAL

DRAWING NO. **2370 - 1833**

TITLE **RAE SUPPORT TOWERS (DD5)**

SCALE N/A | **SHEET 5 of 28** | REV. **ORIG**

TITLE DD5 RAE SUPPORT TOWERS

REV. ORIG | SHEET 5

DWG. NO. 2370 - 1833

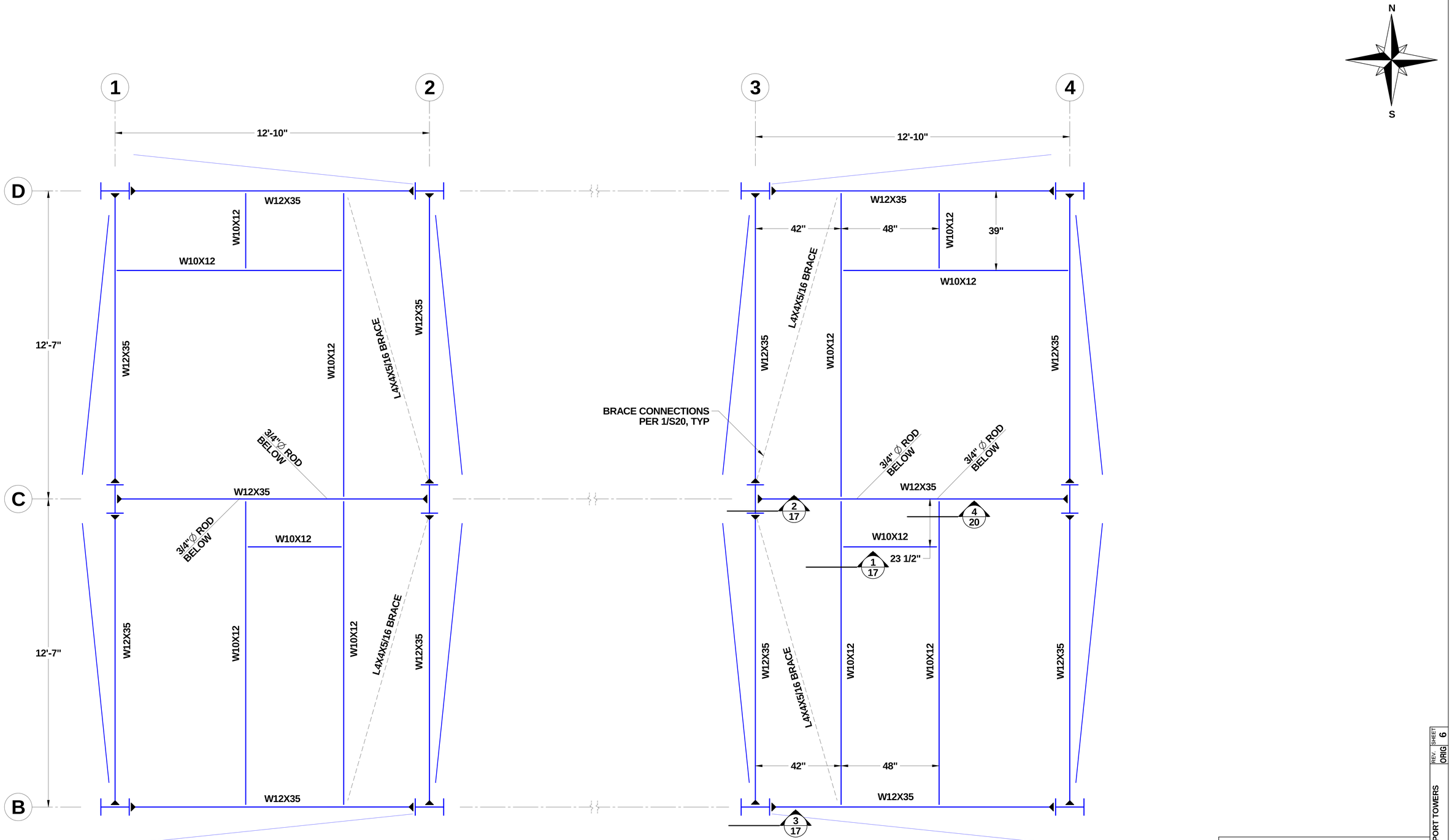

1/6 **LEVEL 2 STRUCTURAL PLAN**

T/ STEEL ELEV = 29' - 4"

PUGET SOUND NAVAL SHIPYARD
CODE 2370
ENGINEERING DIVISION

NO DEVIATIONS SHALL BE MADE
WITHOUT CODE 2370 APPROVAL

DRAWING NO. **2370 - 1833**

TITLE **RAE SUPPORT TOWERS (DD5)**

SCALE N/A | **SHEET 6 of 28** | REV. **ORIG**

TITLE DD5 RAE SUPPORT TOWERS
REV. ORIG SHEET 6
DWG. NO. 2370 - 1833

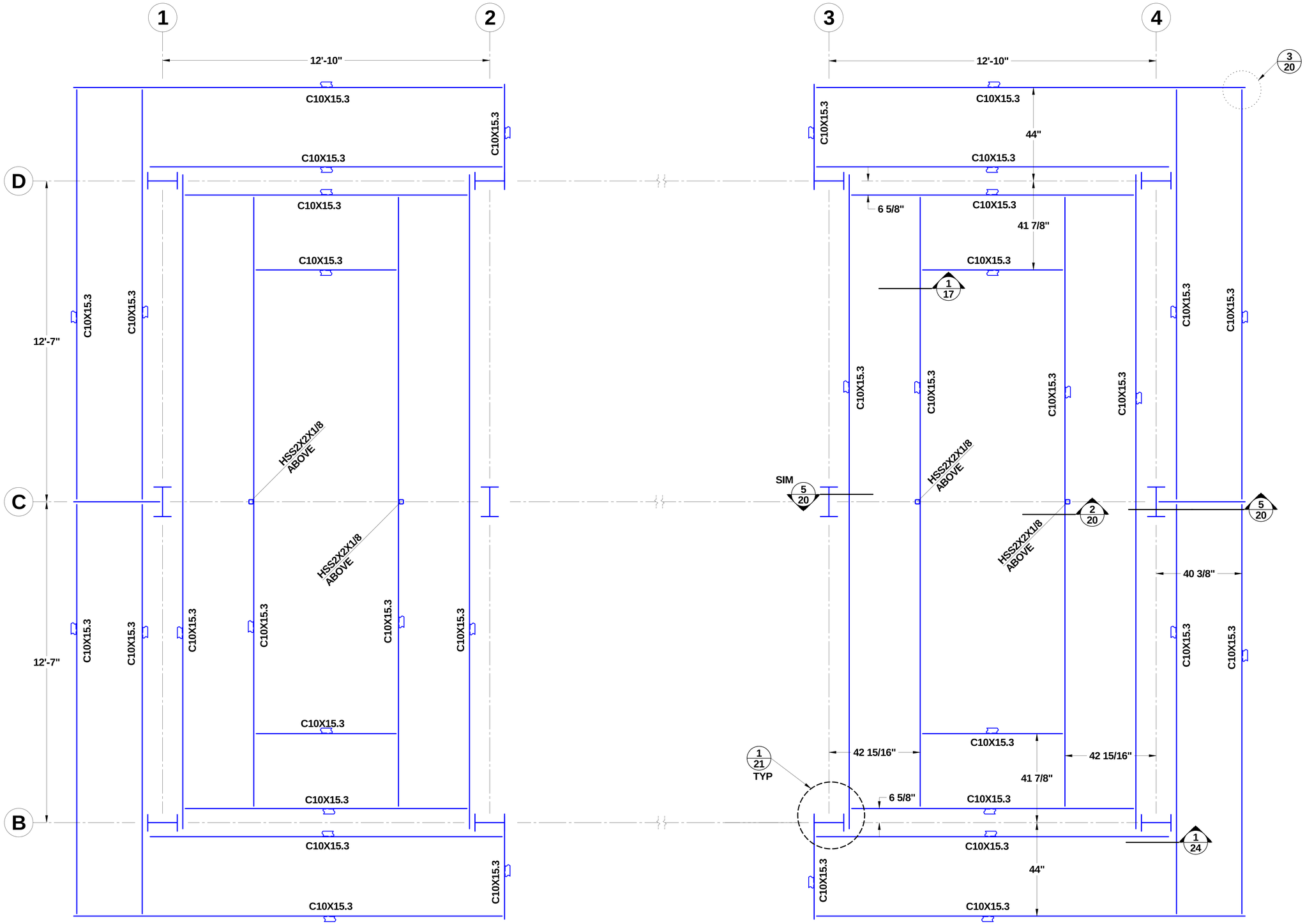

1/7 CATWALK STRUCTURAL PLAN

T/ STEEL ELEV = 39' - 9"

N

S

PUGET SOUND NAVAL SHIPYARD
CODE 2370
ENGINEERING DIVISION

NO DEVIATIONS SHALL BE MADE
WITHOUT CODE 2370 APPROVAL

DRAWING NO. **2370 - 1833**

TITLE **RAE SUPPORT TOWERS (DD5)**

SCALE N/A | **SHEET 7 of 28** | REV. **ORIG**

TITLE DD5 RAE SUPPORT TOWERS

SHEET 7 | REV. ORIG

DWG. NO. 2370 - 1833

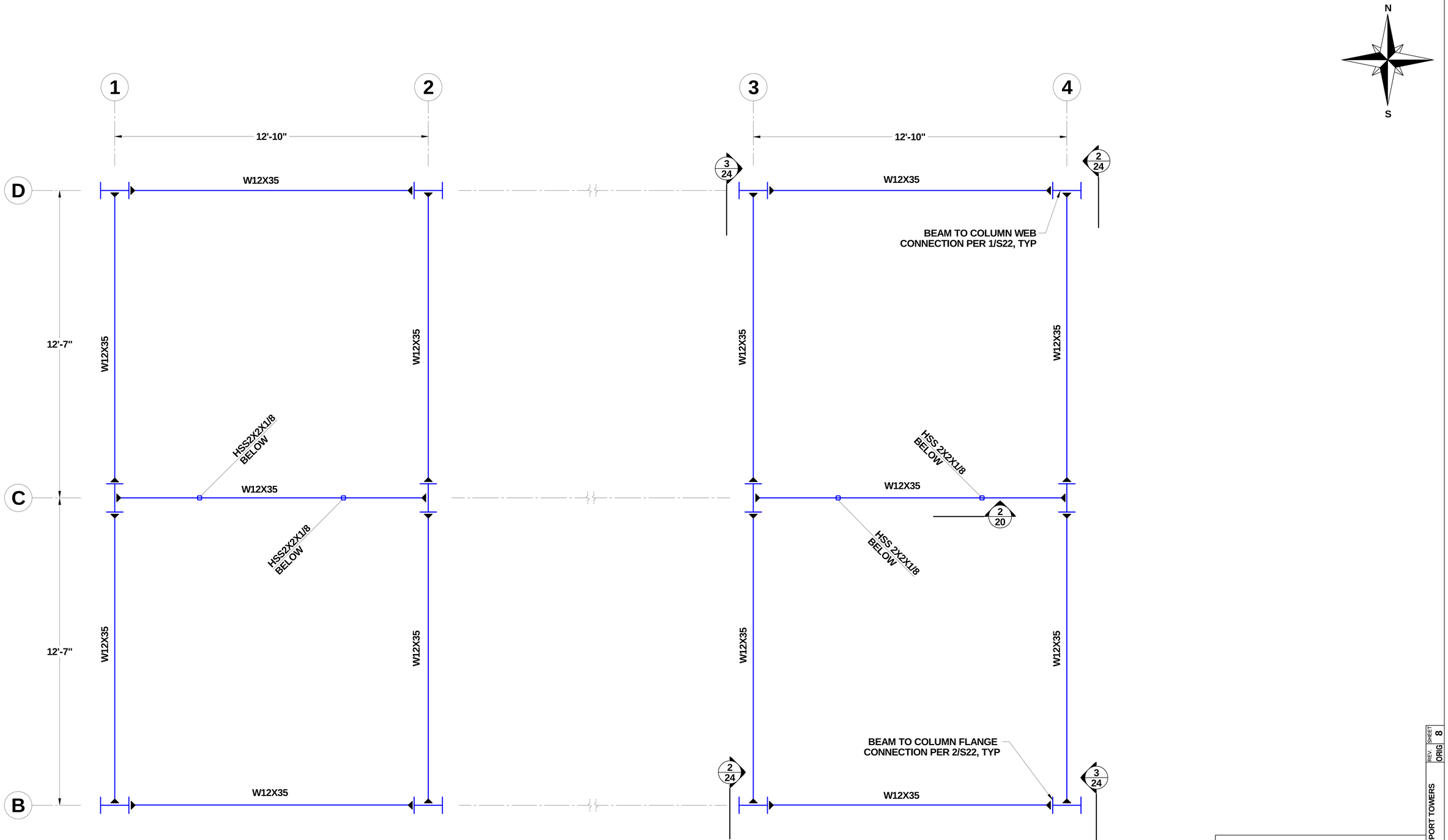

1/8 LEVEL 3 STRUCTURAL PLAN

T/ STEEL ELEV = 43' - 9"

PUGET SOUND NAVAL SHIPYARD
CODE 2370
ENGINEERING DIVISION

NO DEVIATIONS SHALL BE MADE
WITHOUT CODE 2370 APPROVAL

DRAWING NO. **2370 - 1833**

TITLE **RAE SUPPORT TOWERS (DD5)**

SCALE N/A | **SHEET 8 of 28** | REV. **ORIG**

TITLE DD5 RAE SUPPORT TOWERS

REV. ORIG | SHEET 8

DWG. NO. 2370 - 1833

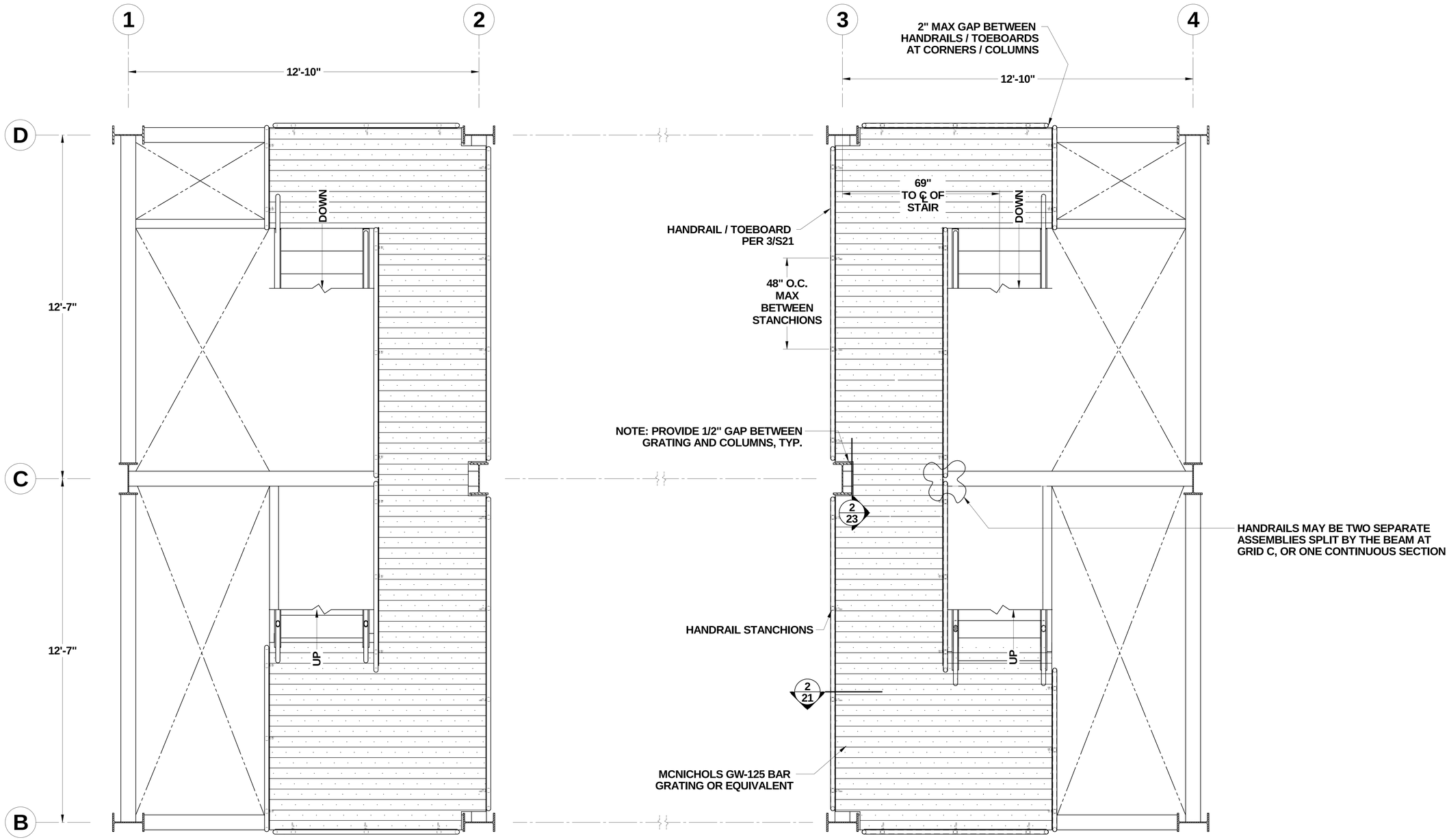

1/9 LEVEL 1 GRATING PLAN

INDICATES BEARING BAR ORIENTATION IN E-W DIRECTION

PUGET SOUND NAVAL SHIPYARD
CODE 2370
ENGINEERING DIVISION

NO DEVIATIONS SHALL BE MADE WITHOUT CODE 2370 APPROVAL

DRAWING NO. **2370 - 1833**

TITLE **RAE SUPPORT TOWERS (DD5)**

SCALE N/A | **SHEET 9 of 28** | REV. **ORIG**

TITLE DD5 RAE SUPPORT TOWERS | REV. ORIG | SHEET 9

DWG. NO. 2370 - 1833

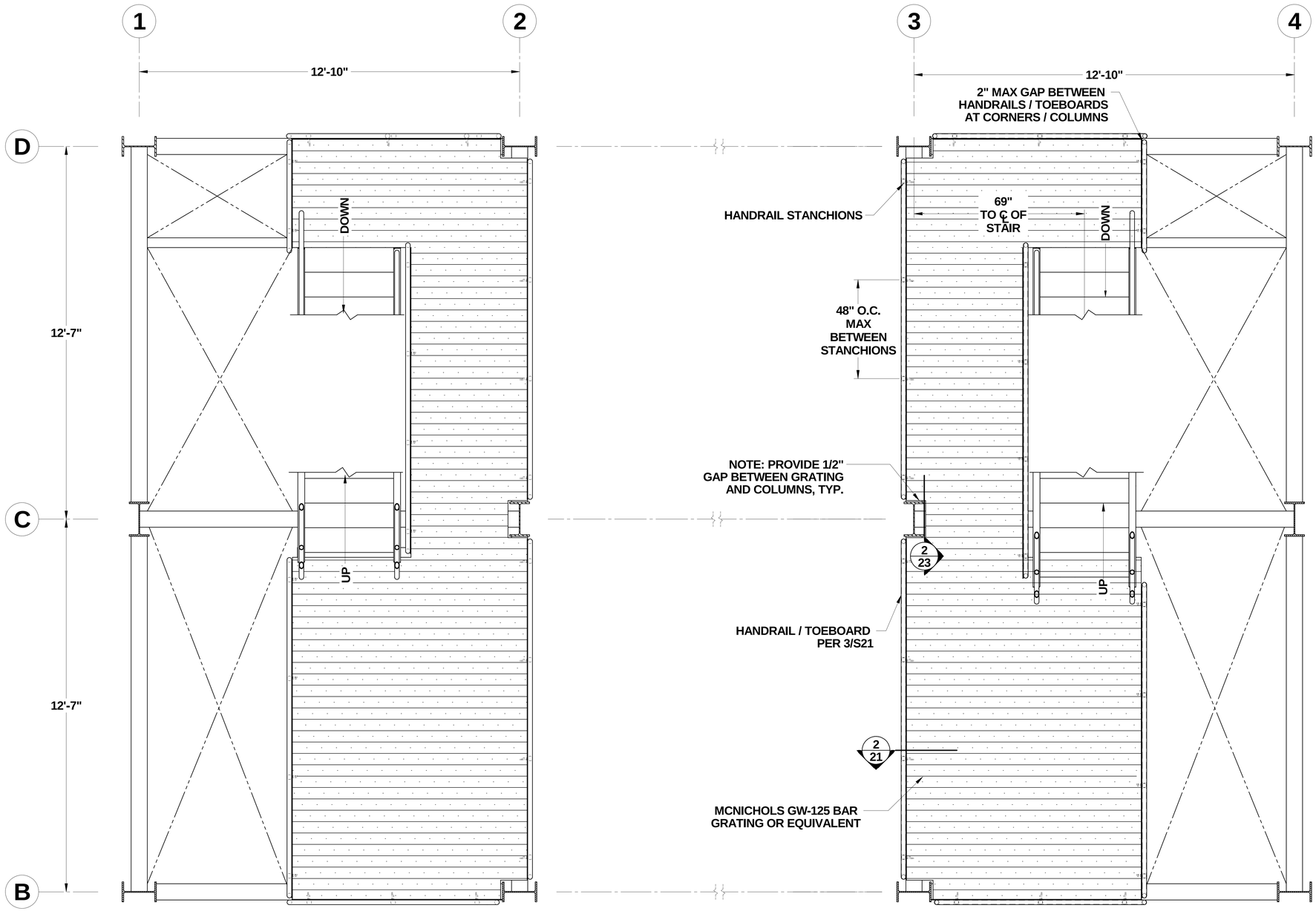

N
S

1/10 LEVEL 2 GRATING PLAN

INDICATES BEARING BAR ORIENTATION IN E-W DIRECTION

PUGET SOUND NAVAL SHIPYARD
CODE 2370
ENGINEERING DIVISION

NO DEVIATIONS SHALL BE MADE WITHOUT CODE 2370 APPROVAL

DRAWING NO. **2370 - 1833**

TITLE **RAE SUPPORT TOWERS (DD5)**

SCALE N/A | **SHEET 10of 28** | REV. **ORIG**

TITLE DD5 RAE SUPPORT TOWERS
REV. ORIG
SHEET 10
DWG. NO. 2370 - 1833

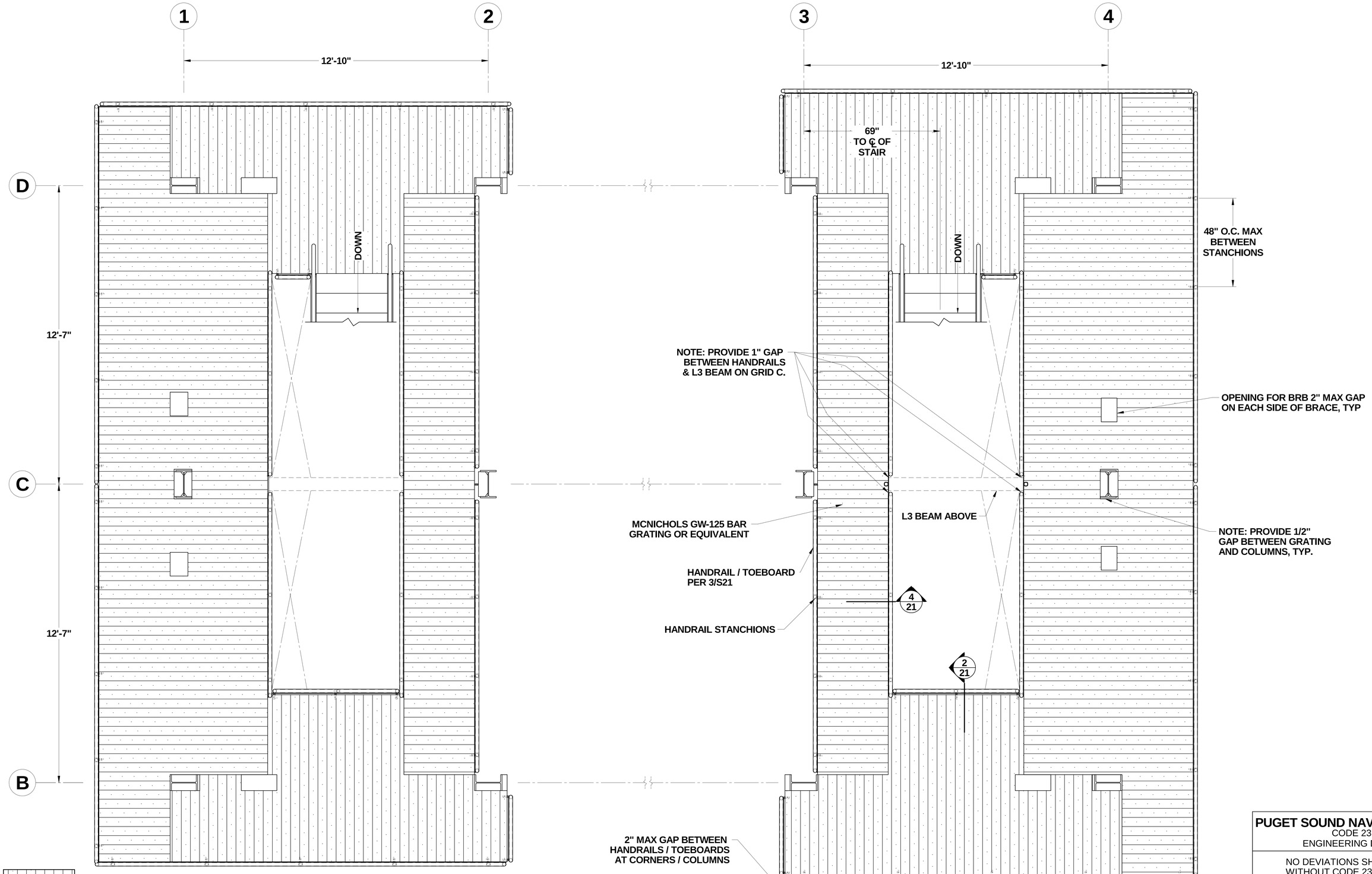

1
11
CATWALK GRATING PLAN

PUGET SOUND NAVAL SHIPYARD
CODE 2370
ENGINEERING DIVISION

NO DEVIATIONS SHALL BE MADE
WITHOUT CODE 2370 APPROVAL

DRAWING NO. **2370 - 1833**

TITLE **RAE SUPPORT TOWERS (DD5)**

SCALE N/A | **SHEET 11of 28** | REV. **ORIG**

TITLE DD5 RAE SUPPORT TOWERS
REV. ORIG
SHEET 11
DWG. NO. 2370 - 1833

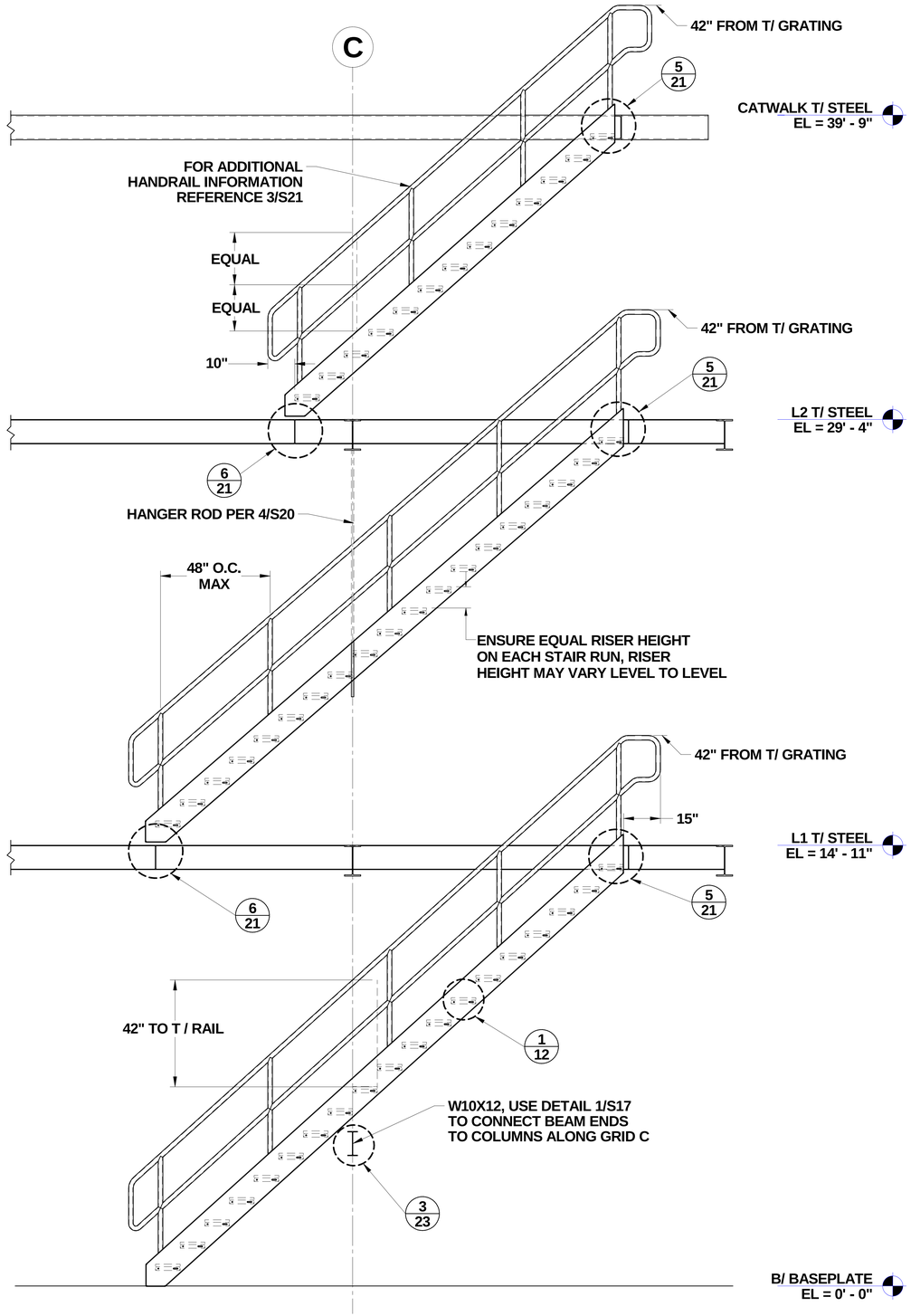

4/12 STAIR ELEVATION

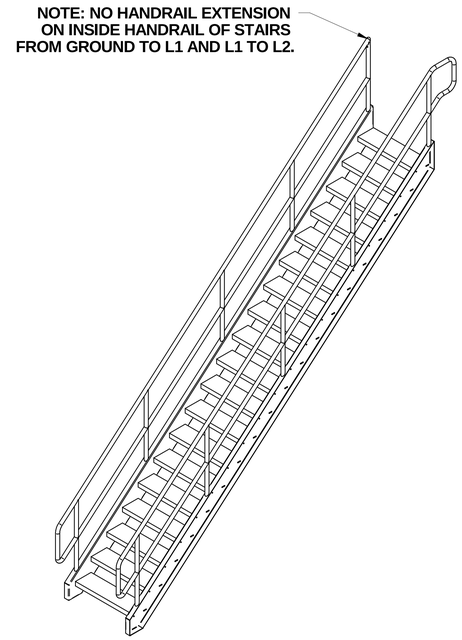

2/12 ISO STAIR VIEW

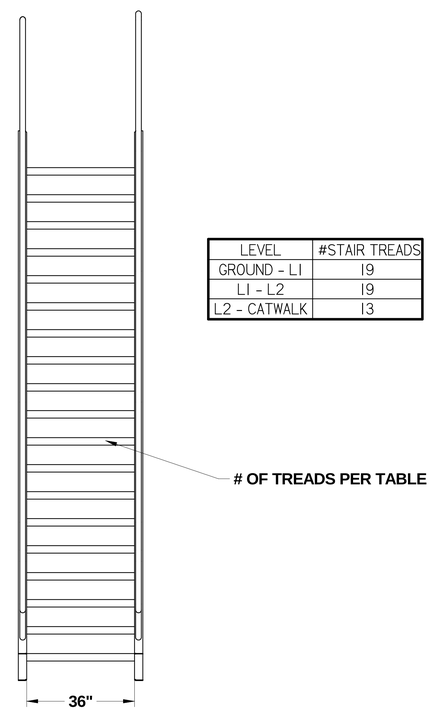

LEVEL	#STAIR TREADS
GROUND - L1	19
L1 - L2	19
L2 - CATWALK	13

3/12 STAIR ELEVATION

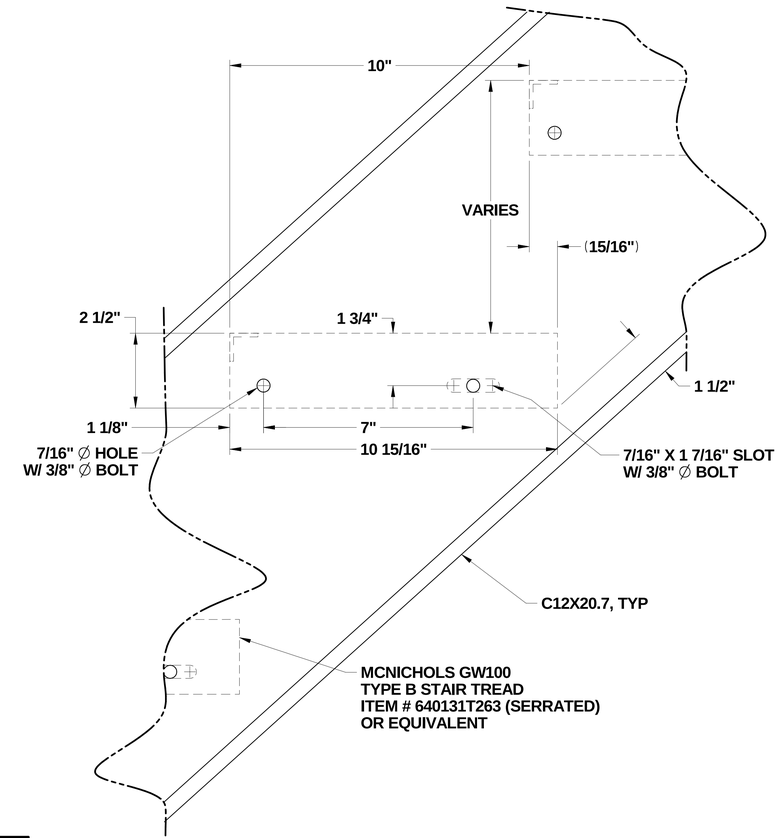

1/12 STAIR TREAD DETAIL

PUGET SOUND NAVAL SHIPYARD
CODE 2370
ENGINEERING DIVISION

NO DEVIATIONS SHALL BE MADE
WITHOUT CODE 2370 APPROVAL

DRAWING NO. **2370 - 1833**

TITLE **RAE SUPPORT TOWERS (DD5)**

SCALE N/A | **SHEET 12of 28** | REV. **ORIG**

TITLE DD5 RAE SUPPORT TOWERS
REV. ORIG
SHEET 12
DWG. NO. 2370 - 1833

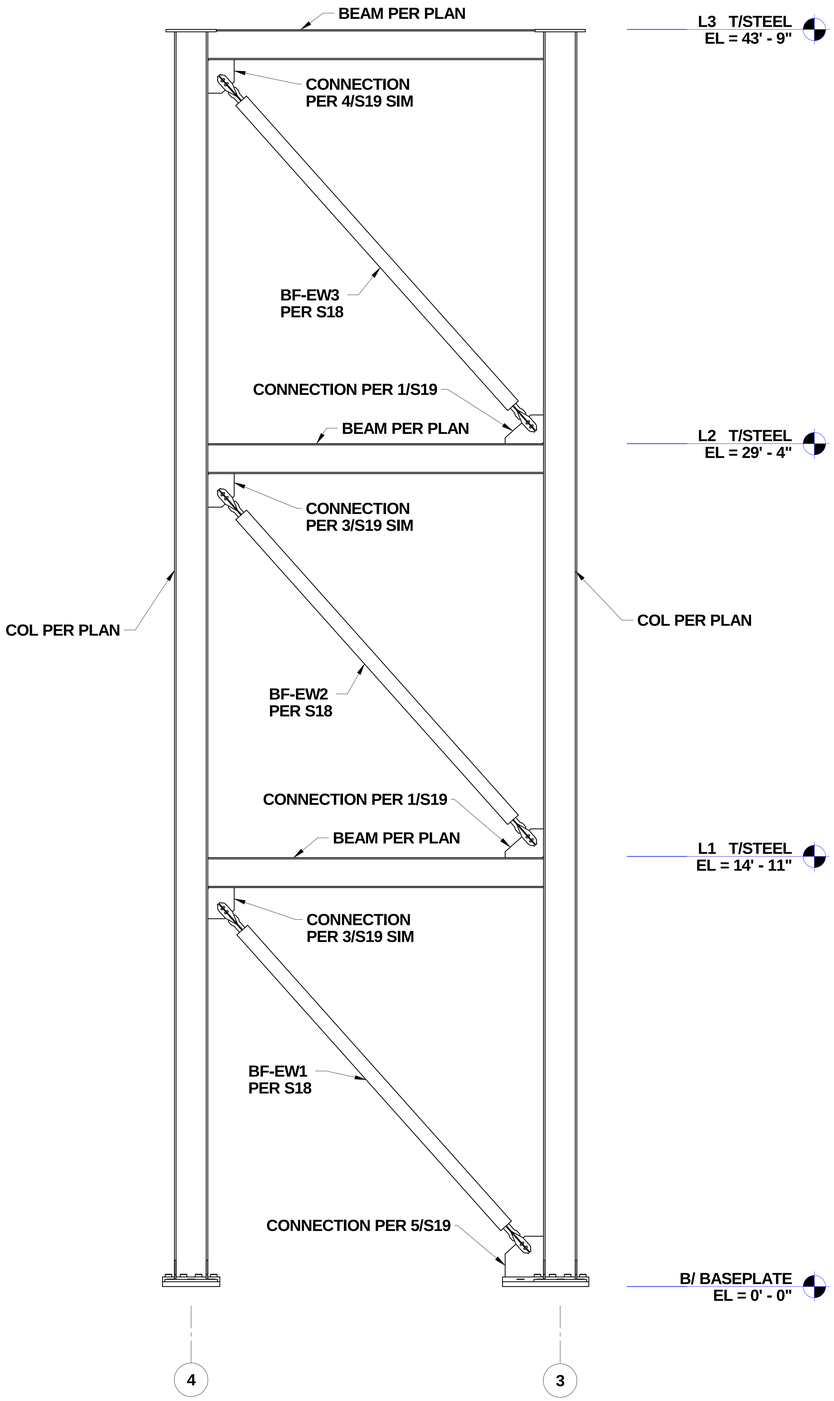

2/13 NORTH ELEVATION

ALONG GRID D LOOKING SOUTH
NOTE: ALL MEMBERS SHOWN IN ELEVATION
ARE PART OF THE SFRS.

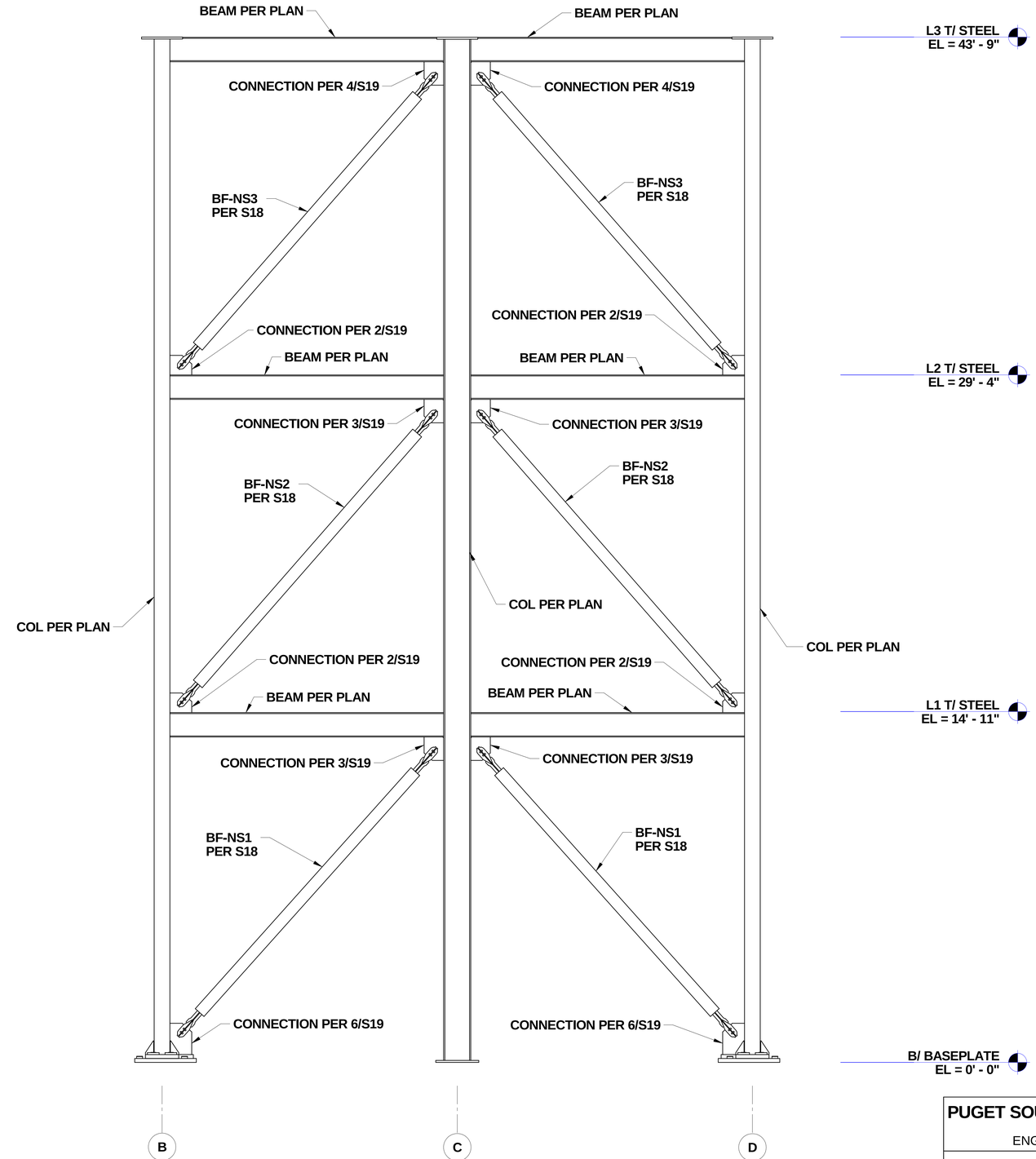

1/13 EAST ELEVATION

ALONG GRID 4 LOOKING WEST
NOTE: ALL MEMBERS SHOWN IN ELEVATION
ARE PART OF THE SFRS.

PUGET SOUND NAVAL SHIPYARD
CODE 2370
ENGINEERING DIVISION

NO DEVIATIONS SHALL BE MADE
WITHOUT CODE 2370 APPROVAL

DRAWING NO. **2370 - 1833**

TITLE **RAE SUPPORT TOWERS (DD5)**

SCALE N/A | **SHEET 13of 28** | REV. **ORIG**

TITLE DD5 RAE SUPPORT TOWERS
REV. ORIG
SHEET 13
DWG. NO. 2370 - 1833

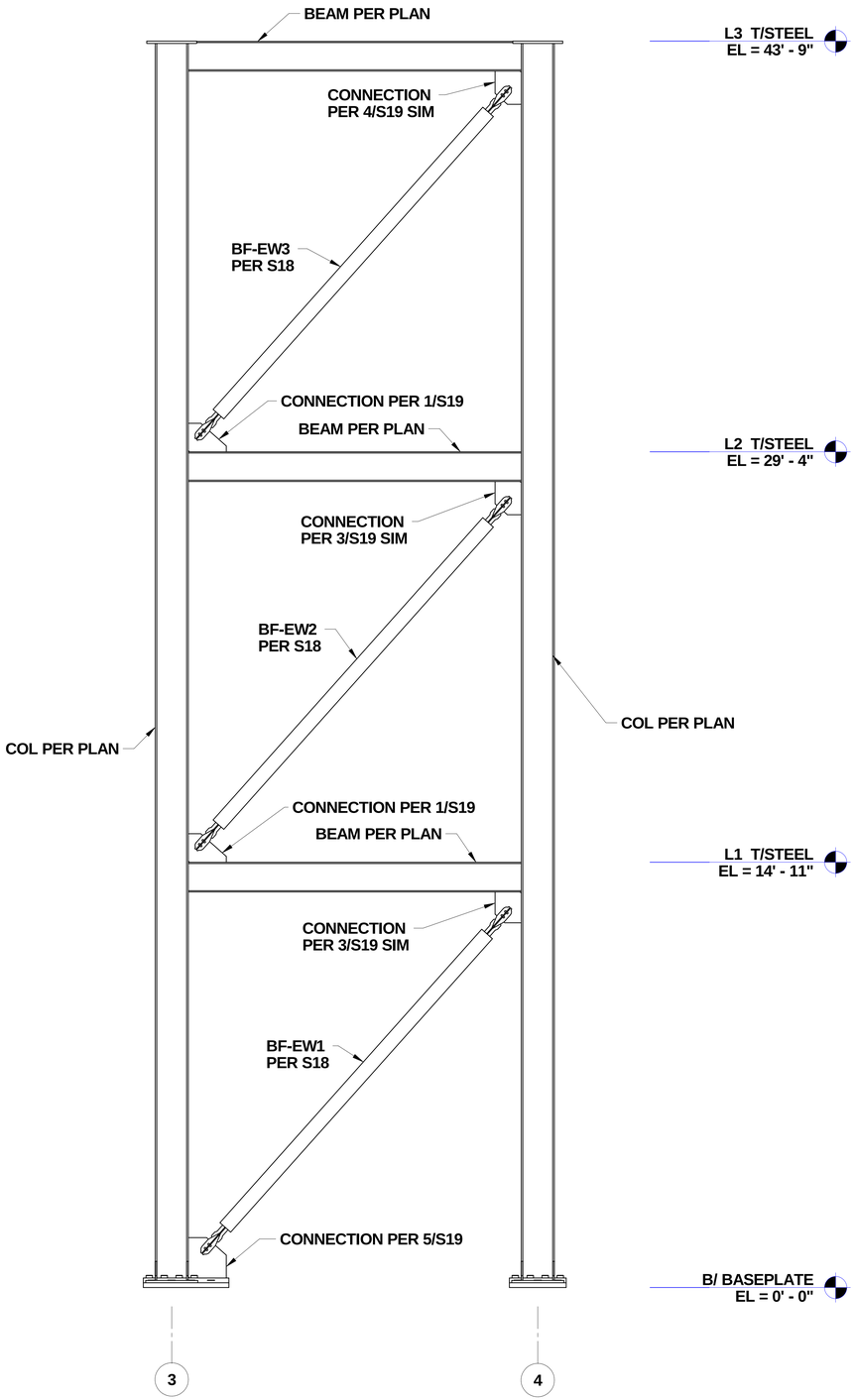

2/14 SOUTH ELEVATION

ALONG GRID B LOOKING NORTH
NOTE: ALL MEMBERS SHOWN IN ELEVATION ARE PART OF THE SFRS.

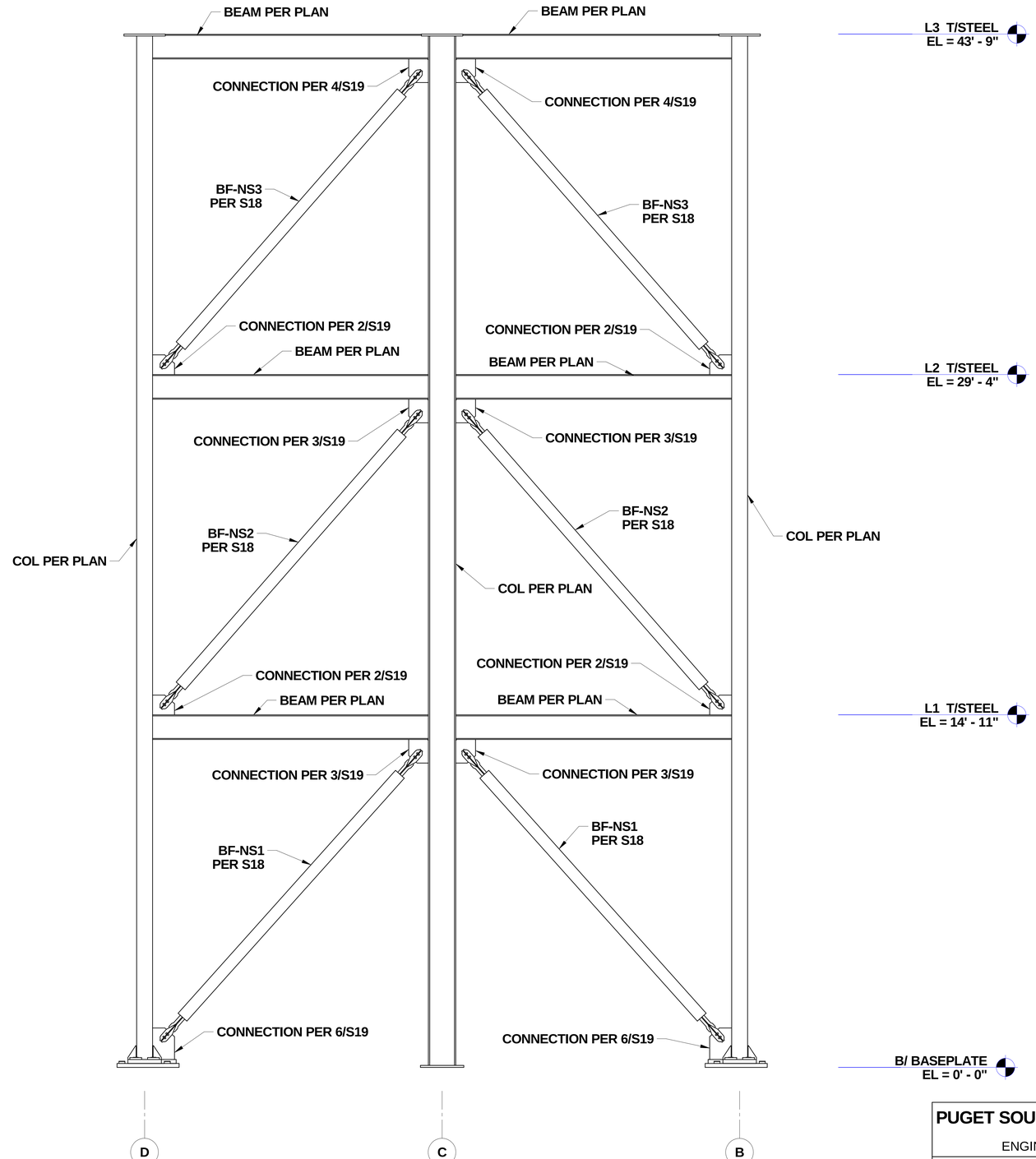

1/14 WEST ELEVATION

ALONG GRID 3 LOOKING EAST
NOTE: ALL MEMBERS SHOWN IN ELEVATION ARE PART OF THE SFRS.

PUGET SOUND NAVAL SHIPYARD
CODE 2370
ENGINEERING DIVISION

NO DEVIATIONS SHALL BE MADE
WITHOUT CODE 2370 APPROVAL

DRAWING NO. **2370 - 1833**

TITLE **RAE SUPPORT TOWERS (DD5)**

SCALE N/A | **SHEET 14of 28** | REV. **ORIG**

TITLE DD5 RAE SUPPORT TOWERS
REV. ORIG
SHEET 14
DWG. NO. 2370 - 1833

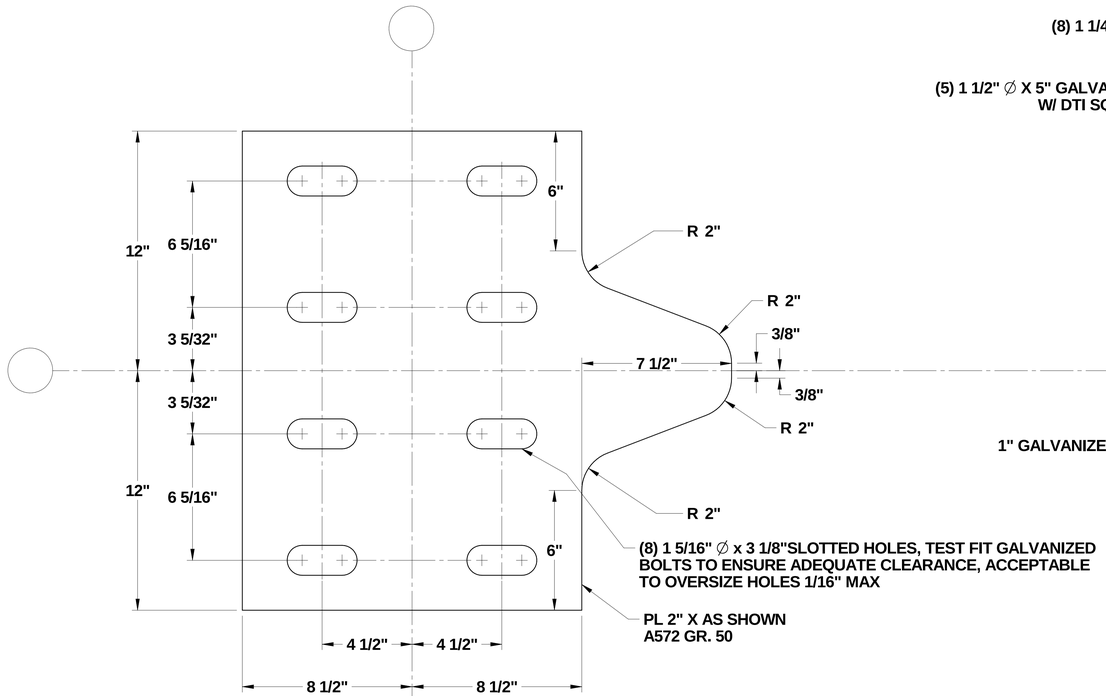

TOP PLATE

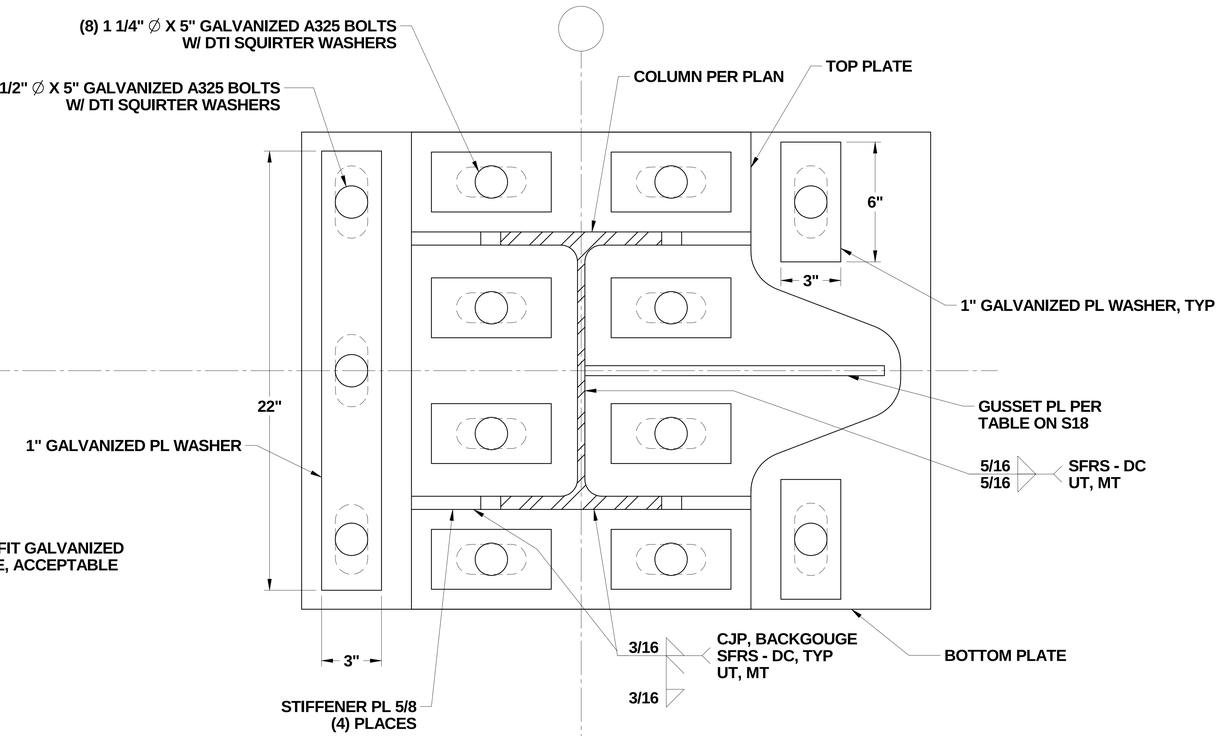

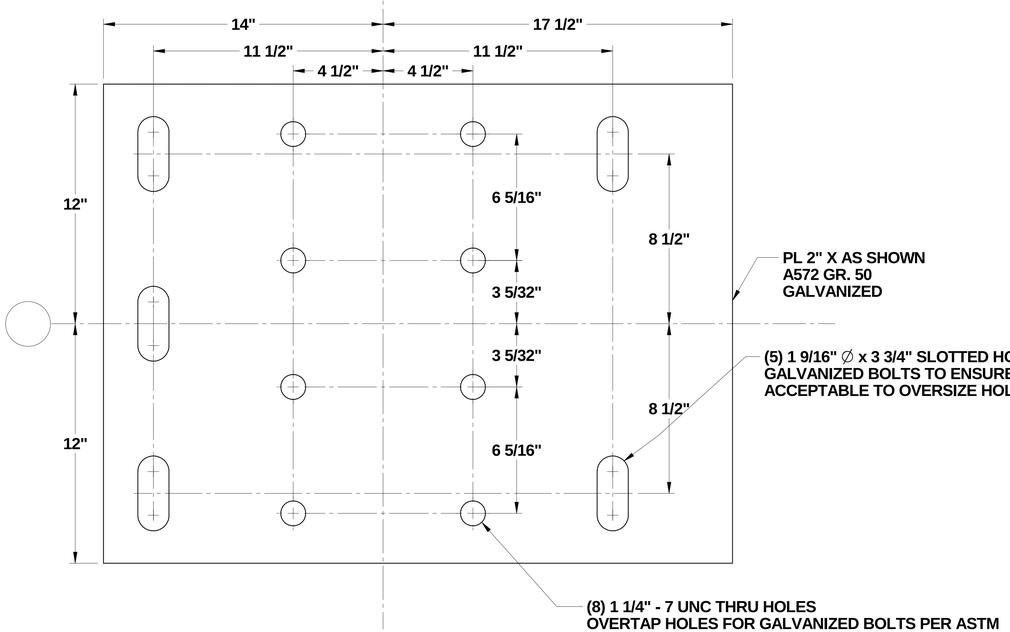

BOTTOM PLATE

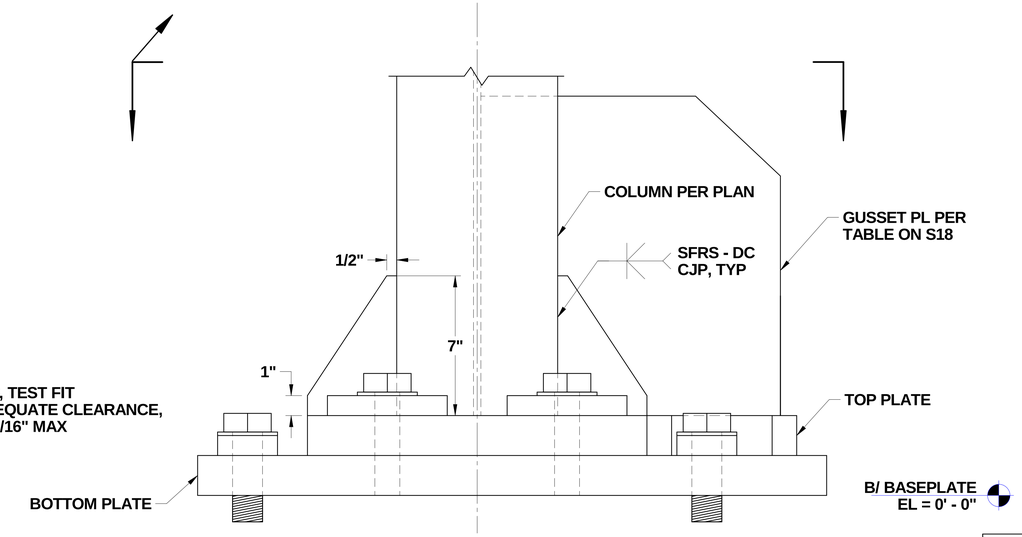

1/15 COLUMN BASEPLATE - SINGLE GUSSET PLATE

GRIDS 1-B, 1-D, 4-B, AND 4-D
NOTE: NO WELDING IN THE k-AREA OF THE COLUMN.

PUGET SOUND NAVAL SHIPYARD
CODE 2370
ENGINEERING DIVISION

NO DEVIATIONS SHALL BE MADE
WITHOUT CODE 2370 APPROVAL

DRAWING NO. 2370 - 1833

TITLE RAE SUPPORT TOWERS (DD5)

SCALE N/A | SHEET 15of 28 | REV. ORIG

TITLE DD5 RAE SUPPORT TOWERS
REV. ORIG
SHEET 15
DWG. NO. 2370 - 1833

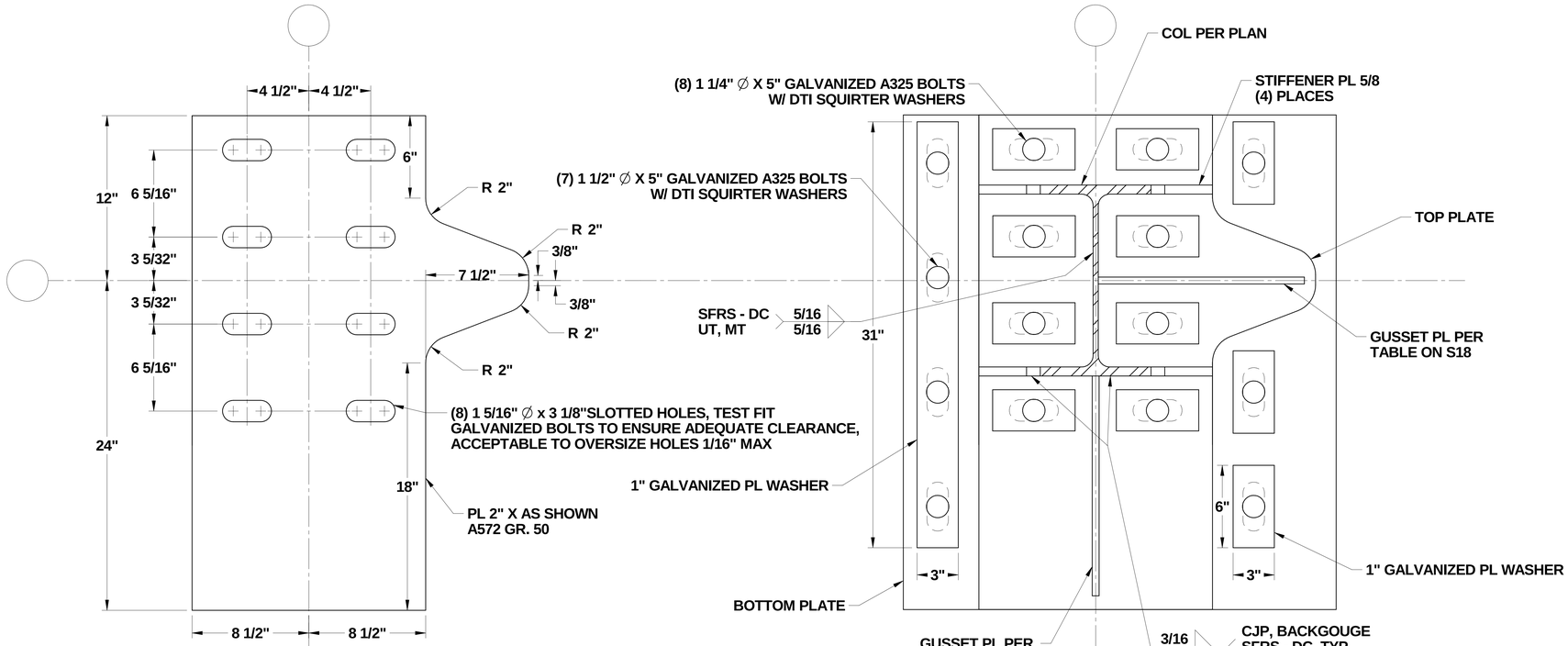

TOP PLATE

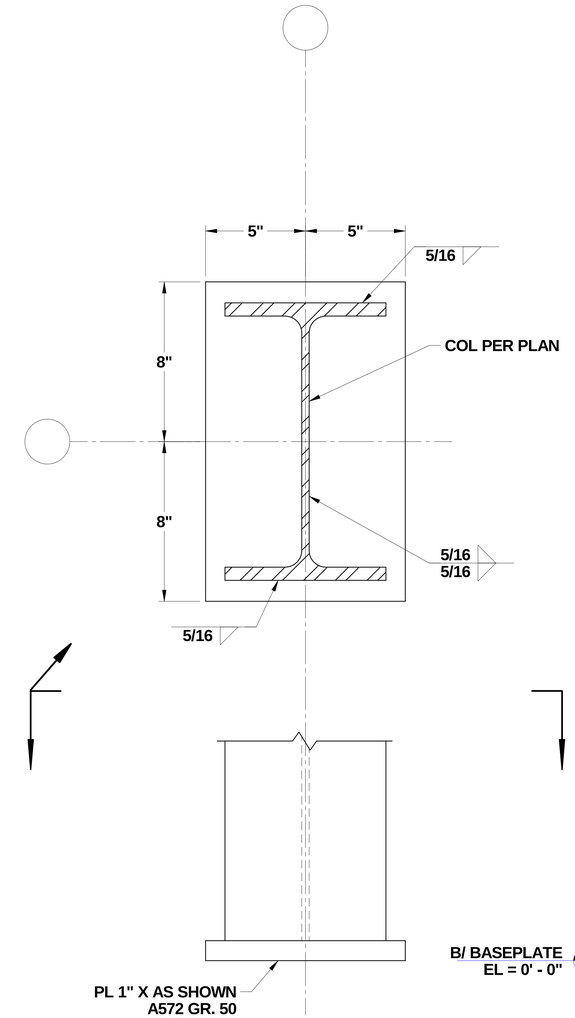

1/16 COLUMN BEARING BASEPLATE

GRIDS 1-C, 2-C, 3-C, AND 4-C
NOTE: NO WELDING IN THE k-AREA OF THE COLUMN.

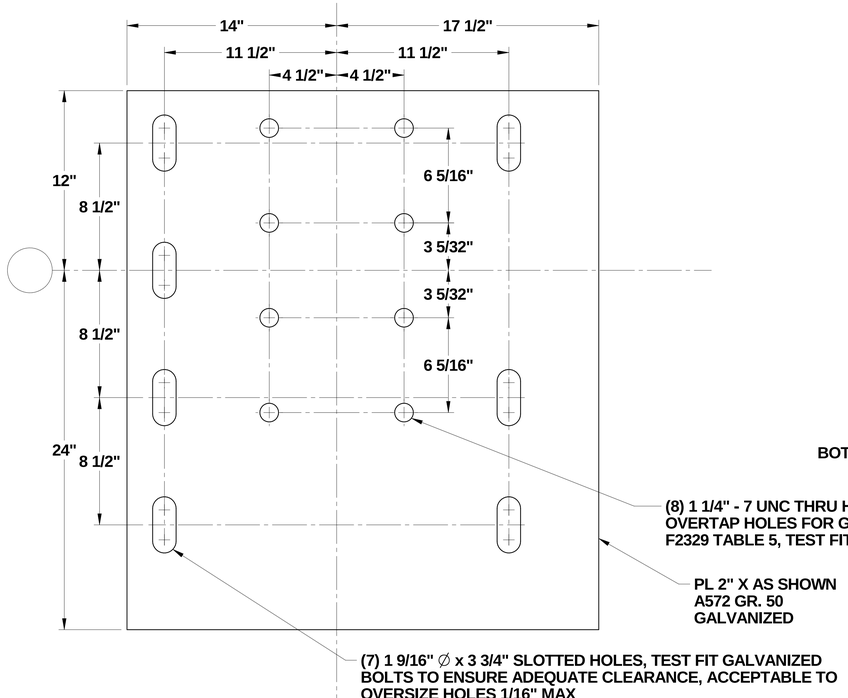

BOTTOM PLATE

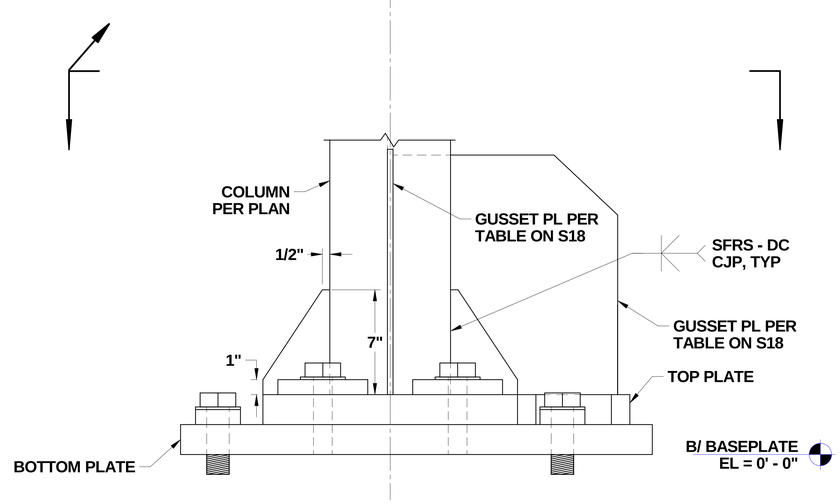

2/16 COLUMN BASEPLATE - DOUBLE GUSSET PLATE

BASEPLATES AT GRIDS 2-B AND 3-D
BASEPLATES AT GRIDS 2-D AND 3-B ARE MIRROR COPIES ABOUT GRID C
NOTE: NO WELDING IN THE k-AREA OF THE COLUMN.

PUGET SOUND NAVAL SHIPYARD
CODE 2370
ENGINEERING DIVISION

NO DEVIATIONS SHALL BE MADE WITHOUT CODE 2370 APPROVAL

DRAWING NO. **2370 - 1833**

TITLE **RAE SUPPORT TOWERS (DD5)**

SCALE N/A | **SHEET 16of 28** | REV. **ORIG**

TITLE DD5 RAE SUPPORT TOWERS
REV. ORIG
SHEET 16
DWG. NO. 2370 - 1833

BEAM TYPE	ROWS OF BOLTS	COLUMNS OF BOLTS	LENGTH (IN)
C10	2	1	6
W10	2	1	6
W12	3	1	9

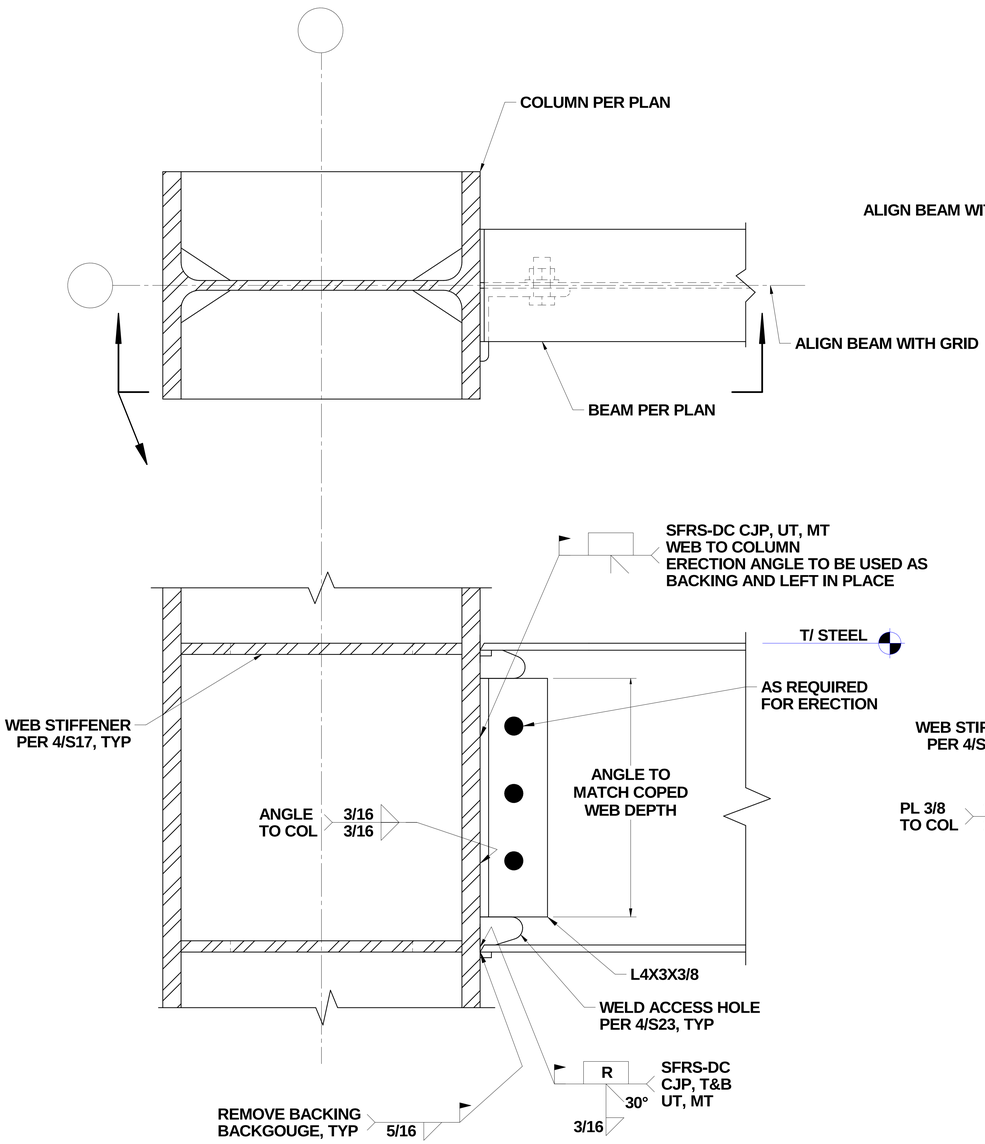

3/17 TYP BEAM MOMENT CONNECTION-TO-COLUMN FLANGE

NOTE: FOR INFORMATION NOT SHOWN, REFER TO 1/S17.

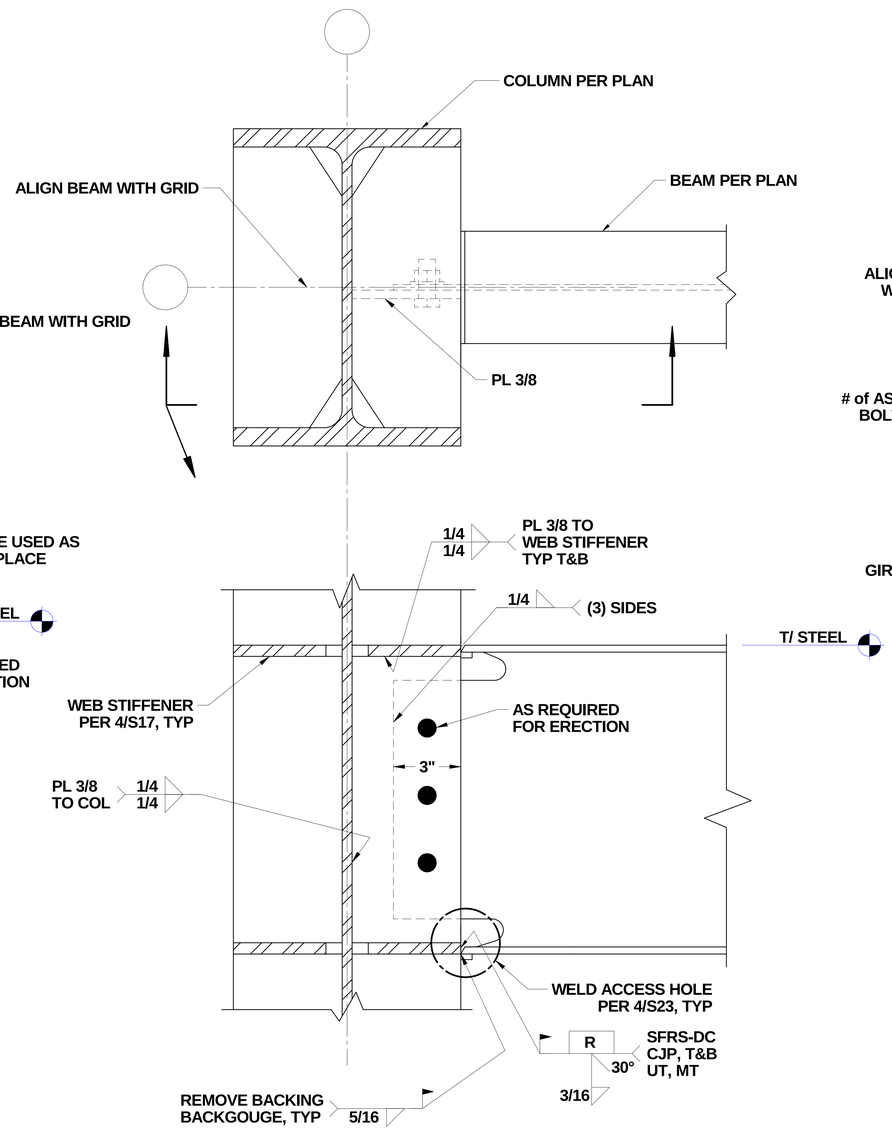

2/17 TYP BEAM MOMENT CONNECTION-TO-COLUMN WEB

NOTE: FOR INFORMATION NOT SHOWN, REFER TO 1/S17.

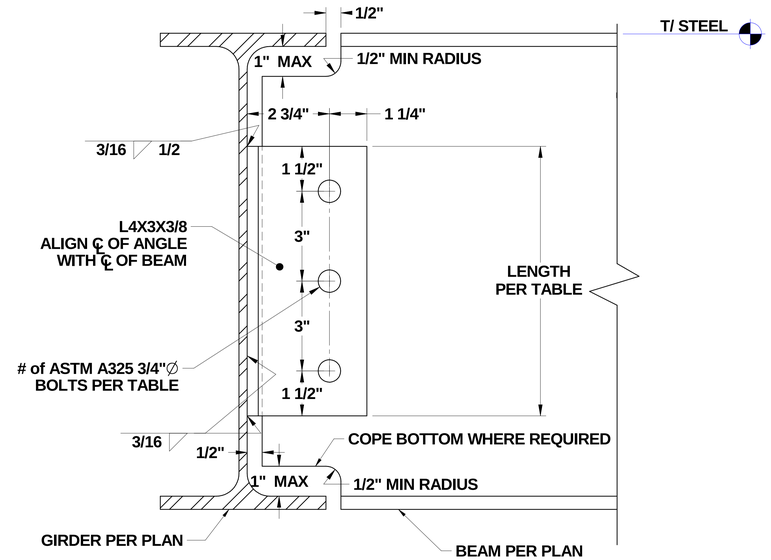

1/17 TYP SHEAR CONNECTION

NOTE: USED AT ALL BEAM TO GIRDER CONNECTIONS, UNO.

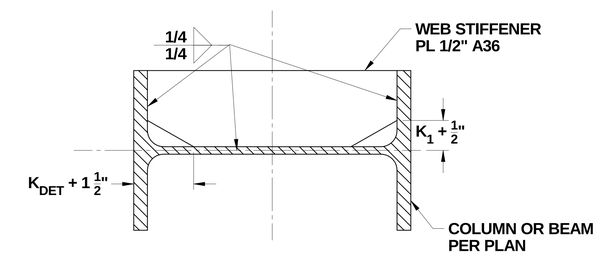

4/17 TYP WEB STIFFENER DETAIL

PUGET SOUND NAVAL SHIPYARD
CODE 2370
ENGINEERING DIVISION

NO DEVIATIONS SHALL BE MADE
WITHOUT CODE 2370 APPROVAL

DRAWING NO. **2370 - 1833**

TITLE **RAE SUPPORT TOWERS (DD5)**

SCALE N/A | **SHEET 17of 28** | REV. **ORIG**

TITLE DD5 RAE SUPPORT TOWERS
REV. ORIG
SHEET 17
DWG. NO. 2370 - 1833

BUCKLING RESTRAINED BRACE (BRB) SCHEDULE

EOR-ID	Line	Grids	Lvls	Qty	Pu	Core Area	Stiffness Modification	L'_{ysc}	Minimum Stroke	W_g	W_{sg}	Casing			Gusset Info at Lower End of BRB									Gusset Info at Upper End of BRB								
												Shape	H	W	t_g	t_{rg}	W_{rg}	W_b	L_{wb}	W_c	L_{wc}	L_{gb}	L_{gc}	t_g	t_{rg}	W_{rg}	W_b	L_{wb}	W_c	L_{wc}	L_{gb}	L_{gc}
#		#	#	#	kips	in²	Factor (Kf)	in	in	#	#	t or p	in	in	in	in	in	in	in	in	in	in	in	in	in	in	in	in	in	in	in	in	in
BF-NS1	1, 2, 3, 4	B-C, C-D	L0	8	18.7	1.00	1.40	162.21	3.00	3/16	1/4	t	6	6	1/2	0	-	3/16	11	3/16	8	15	10	1/2	0	-	3/16	8	3/16	10	10	12
BF-NS2	1, 2, 3, 4	B-C, C-D	L1	8	18.7	1.00	1.40	162.21	3.00	3/16	1/4	t	6	6	1/2	0	-	3/16	11	3/16	8	15	10	1/2	0	-	3/16	8	3/16	10	10	12
BF-NS3	1, 2, 3, 4	B-C, C-D	L2	8	18.7	1.00	1.40	159.28	3.00	3/16	1/4	t	6	6	1/2	0	-	3/16	11	3/16	14	15	16	1/2	0	-	3/16	8	3/16	10	10	12
BF-EW1	B, D	1-2, 3-4	L0	4	48.9	1.50	1.25	160.55	3.00	3/16	1/4	t	6	6	1/2	0	-	1/4	12	3/16	10	16	12	1/2	0	-	3/16	9	3/16	12	11	14
BF-EW2	B, D	1-2, 3-4	L1	4	48.9	1.50	1.25	160.55	3.00	3/16	1/4	t	6	6	1/2	0	-	1/4	12	3/16	10	16	12	1/2	0	-	3/16	9	3/16	12	11	14
BF-EW3	B, D	1-2, 3-4	L2	4	48.9	1.50	1.25	157.84	3.00	3/16	1/4	t	6	6	1/2	0	-	1/4	12	3/16	15	16	17	1/2	0	-	3/16	9	3/16	11	11	13

Table Symbols

- W_b = Minimum size of beam weld
- L_{wb} = Minimum length of beam weld
- t_g = Thickness of gusset
- **Pu** = Brace Design Force
- W_c = Minimum size of column weld
- L_{wc} = Minimum length of column weld
- W_g = Size of weld for BRB core to gusset
- W_{sg} = Size of weld for BRB core stiffener to gusset
- **Shape** p = pipe, t = tube (square/rect)
- **W** = Casing Width or Diameter
- **H** = Casing Height or Diameter
- t_c = Casing Thickness
- L'_{ysc} = Yielding length of core
- L_{gc} = Approximate height of gusset (not for detailing)
- L_{gb} = Approximate width of gusset (not for detailing) (At V or Chev, equal to 1/2 gusset width)
- t_{rg} = Thickness of gusset reinforcing pad (repad), where occurs
- W_{rg} = Minimum size of repad weld to gusset

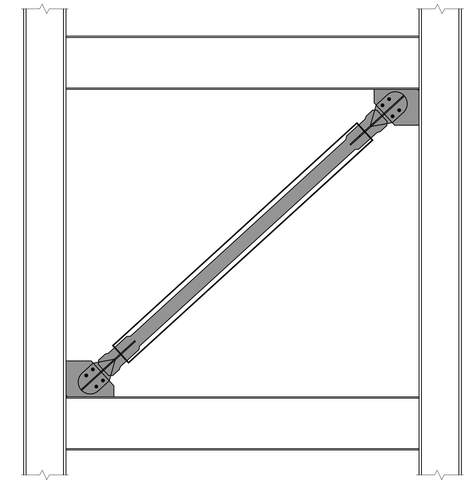

1/18 **BRB PROTECTED ZONE INFORMATION**

NOTE: SHADED REGION REPRESENTS PROTECTED ZONE.

BRB SCHEDULE NOTES:

1. THE BRB SUPPLIER SHALL SUBMIT SIGNED AND SEALED CALCULATIONS WITH ALL SHOP DRAWINGS. THE ENGINEER SHALL BE A REGISTERED STRUCTURAL ENGINEER IN THE STATE OF WASHINGTON.
2. THE BRB SUPPLIER SHALL DESIGN BRACE CONNECTIONS IN ACCORDANCE WITH AISC 341-10.
3. THE WELD SIZES AND GUSSET PLATE SIZES GIVEN IN THE SCHEDULE ARE FOR PRICING PURPOSES ONLY. FINAL DESIGN TO BE BY THE BRB SUPPLIER.
4. ALL GUSSET PLATES SHALL BE ASTM A572 GR. 50.
5. APPROVED BUCKLING RESTRAINED BRACE SUPPLIERS:

   COREBRACE
   5789 W. WELLS PARK RD.
   WEST JORDAN, UT, 84081
   www.corebrace.com
   1-801-280-0701

   STAR SEISMIC
   6300 N. SAGEWOOD DRIVE, SUITE H #511
   PARK CITY, UT, 84098
   www.starseismic.net
   1-435-940-9222

6. Pu GIVEN IS THE GOVERNING CODE LEVEL FORCE FROM ASCE 7-10 STRENGTH BASED LOAD COMBINATIONS 5 AND 7.
7. THE MAXIMUM OUT-TO-OUT DIMENSIONS FOR EACH BRACE IS 8".
8. Fysc IS THE ACTUAL YIELD STRESS OF THE STEEL CORE AS DETERMINED BY COUPON TESTING. CORE MATERIAL SHALL BE ASTM A36 MATERIAL SELECTED TO PROVIDE 38 ksi ≤ Fysc ≤ 46 ksi. CHARPY TESTING REQUIRED WHEN THICKNESS OF THE CORE MATERIAL EXCEEDS 2".
9. BRACE STIFFNESS Keff TO BE KF x Asc x E/Lwp-wp ± 10%. WHERE THE VALUES FOR STIFFNESS MODIFICATION FACTOR (KF) & STEEL CORE AREA (Asc) ARE TAKEN FROM THE TABLE PROVIDED FOR EACH BRACE ELEVATION & Lwp-wp IS THE WORKPOINT -TO-WORKPOINT LENGTH OF THE BRACE.
10. BRACE STRAINS TO BE CALCULATED AS Pservice/Keff, WHERE Pservice = Pu/(ρI). ρ IS THE CODE REDUNDANCY FACTOR (1.3 FOR THIS STRUCTURE) AND I IS THE CODE IMPORTANCE FACTOR (1.25 FOR THIS STRUCTURE).
11. MAXIMUM ω NOT TO EXCEED 1.54. MAXIMUM β NOT TO EXCEED 1.10.
12. MINIMUM STROKE TO OCCUR AT EACH END OF BRACE IN TENSION AND COMPRESSION DIRECTIONS. CORE EXTENSION TO REMAIN STABLE OVER 2X ITS LENGTH.
13. DETAIL 1/S18 ILLUSTRATES THE BRB PROTECTED ZONES WHERE NO STRUCTURAL CONNECTIONS ARE ALLOWED.

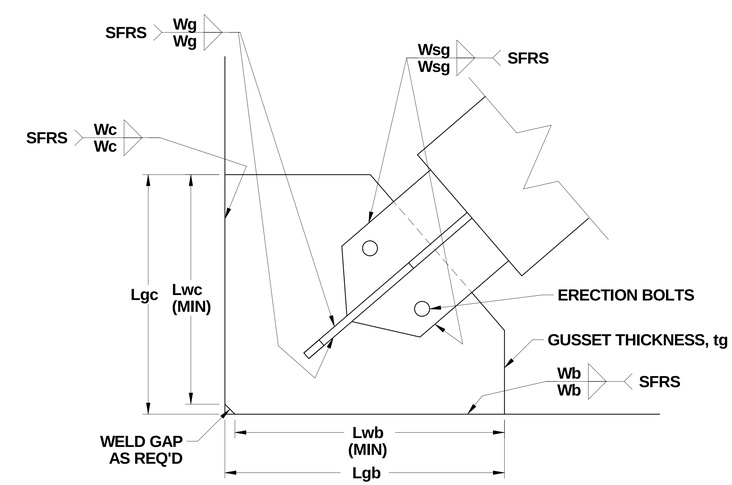

2/18 **TYP GUSSET AND BRB DETAIL**

NOTE: SEE SCHEDULE FOR VALUES.

PUGET SOUND NAVAL SHIPYARD
CODE 2370
ENGINEERING DIVISION

NO DEVIATIONS SHALL BE MADE WITHOUT CODE 2370 APPROVAL

DRAWING NO. **2370 - 1833**

TITLE **RAE SUPPORT TOWERS (DD5)**

SCALE N/A | **SHEET 18of 28** | REV. **ORIG**

TITLE DD5 RAE SUPPORT TOWERS
REV. ORIG
SHEET 18
DWG. NO. 2370 - 1833

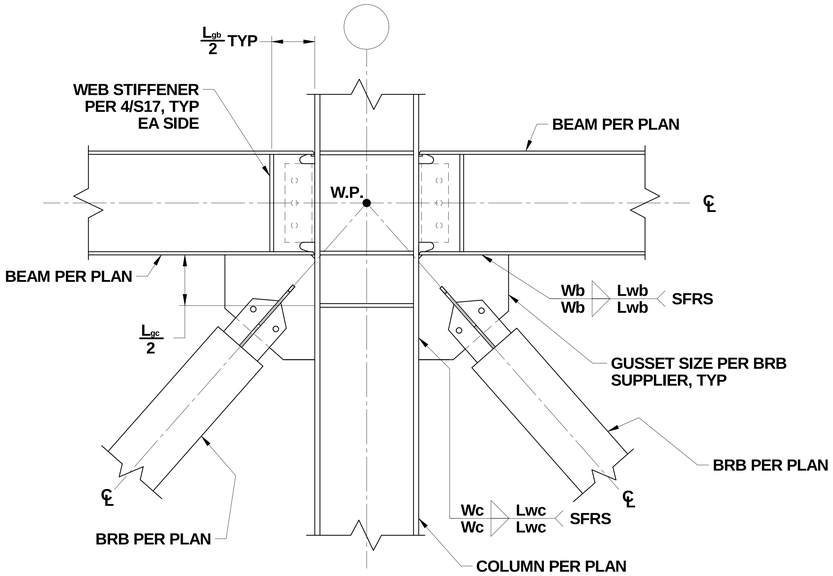

3/19 TYP GUSSET PL CONNECTION TO BOTTOM OF BEAM

NOTE: BRB / BEAM ONLY ON ONE SIDE AT SIM

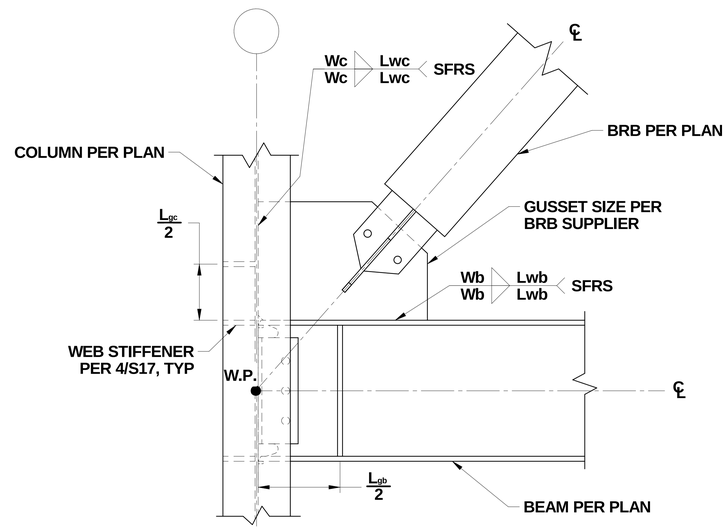

2/19 TYP GUSSET PL CONNECTION TO COLUMN WEB

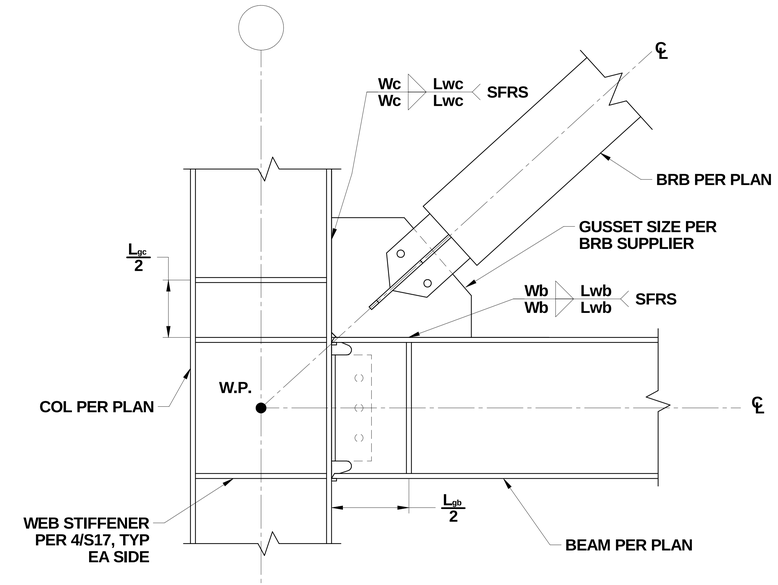

1/19 TYP GUSSET PL CONNECTION TO COLUMN FLANGE

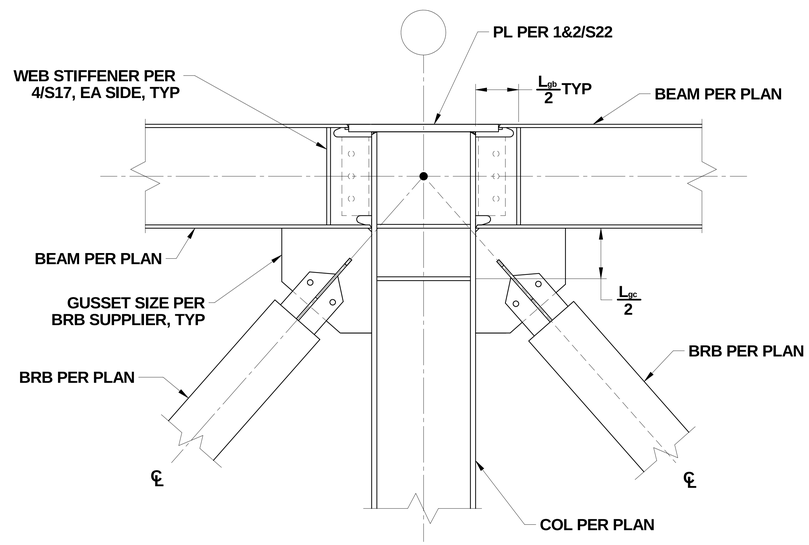

4/19 TYP GUSSET PL CONNECTION TO BOTTOM OF BEAM AT L3

NOTE: FOR INFORMATION NOT SHOWN, REFERENCE 3/S19
BRB / BEAM ONLY ON ONE SIDE AT SIM

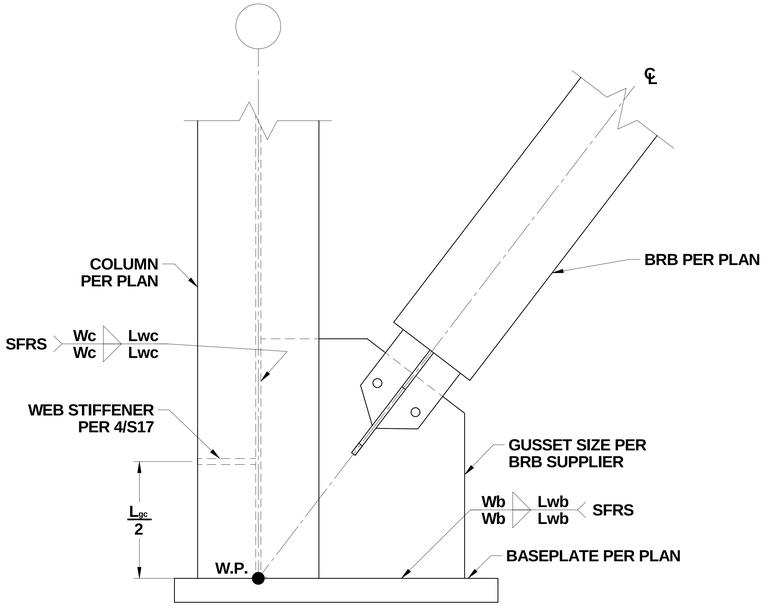

6/19 TYP GUSSET PL TO COLUMN WEB AT BASEPLATE

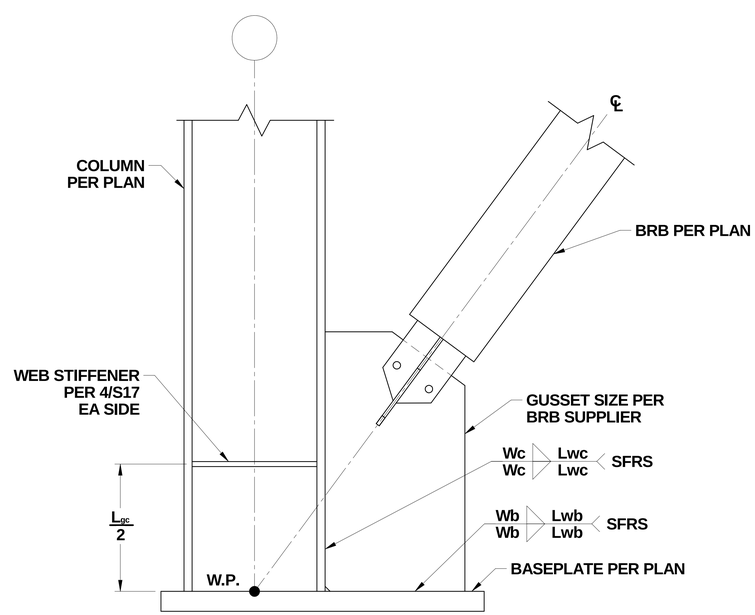

5/19 TYP GUSSET PL TO COLUMN FLANGE AT BASEPLATE

PUGET SOUND NAVAL SHIPYARD
CODE 2370
ENGINEERING DIVISION

NO DEVIATIONS SHALL BE MADE
WITHOUT CODE 2370 APPROVAL

DRAWING NO. 2370 - 1833

TITLE RAE SUPPORT TOWERS (DD5)

SCALE N/A | SHEET 19of 28 | REV. ORIG

TITLE DD5 RAE SUPPORT TOWERS | REV. ORIG | SHEET 19

DWG. NO. 2370 - 1833

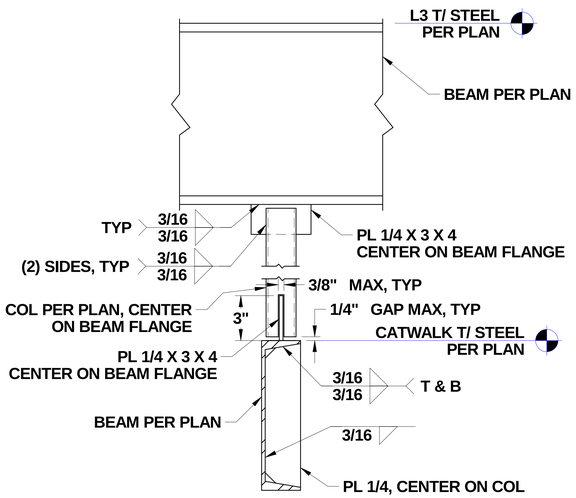

2/20 CATWALK SUPPORT COLUMN DETAIL

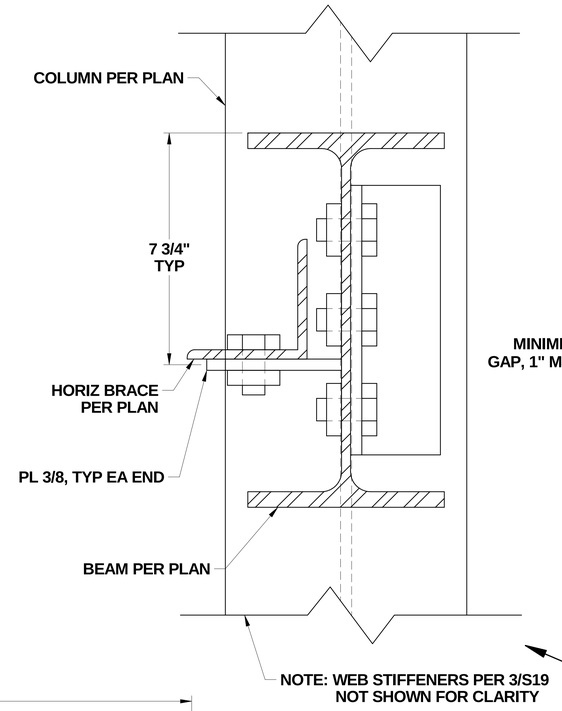

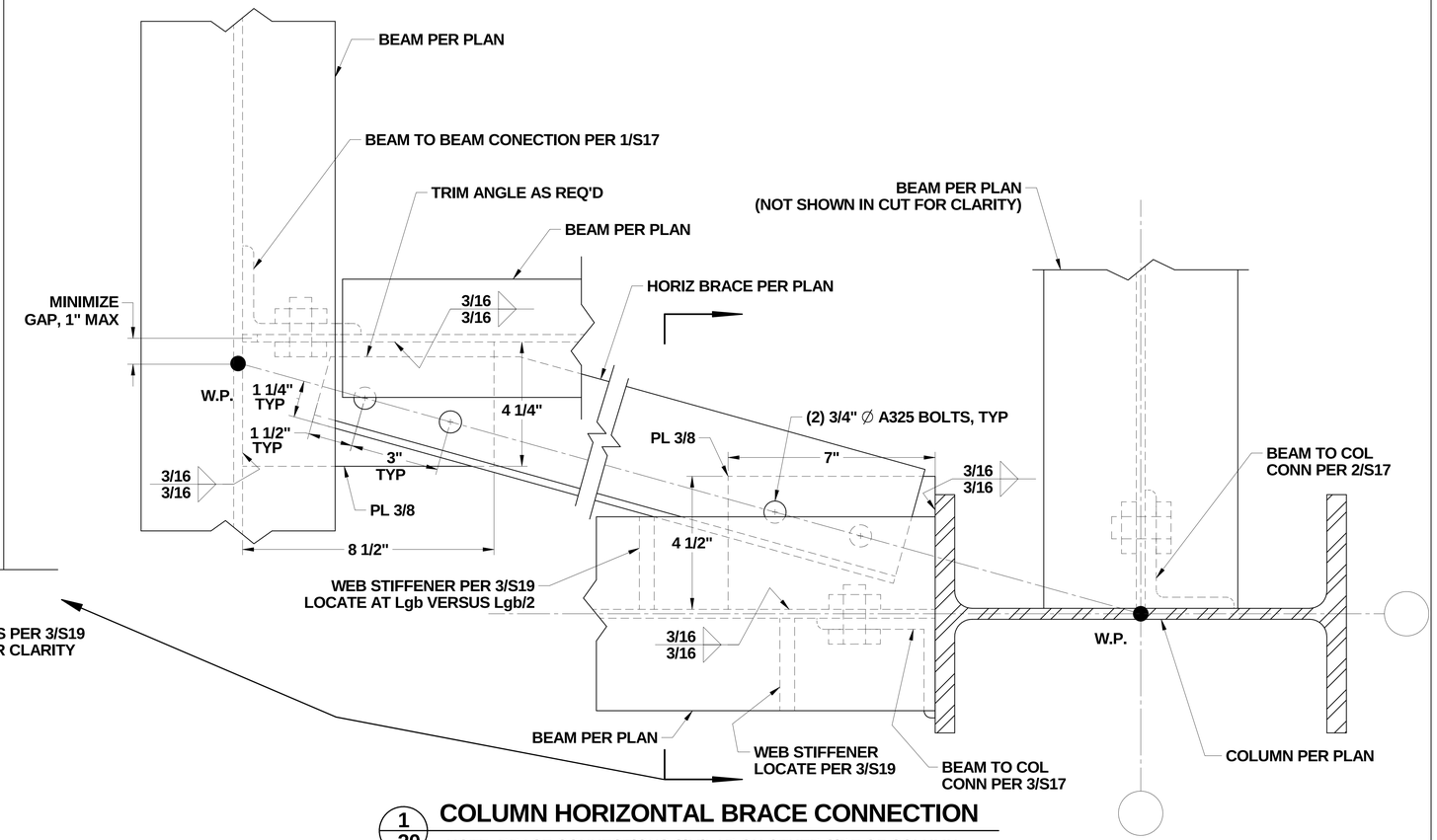

1/20 COLUMN HORIZONTAL BRACE CONNECTION

NOTE: BRACE CONNECTIONS SIMILAR ON OTHER SIDE OF COLUMN.

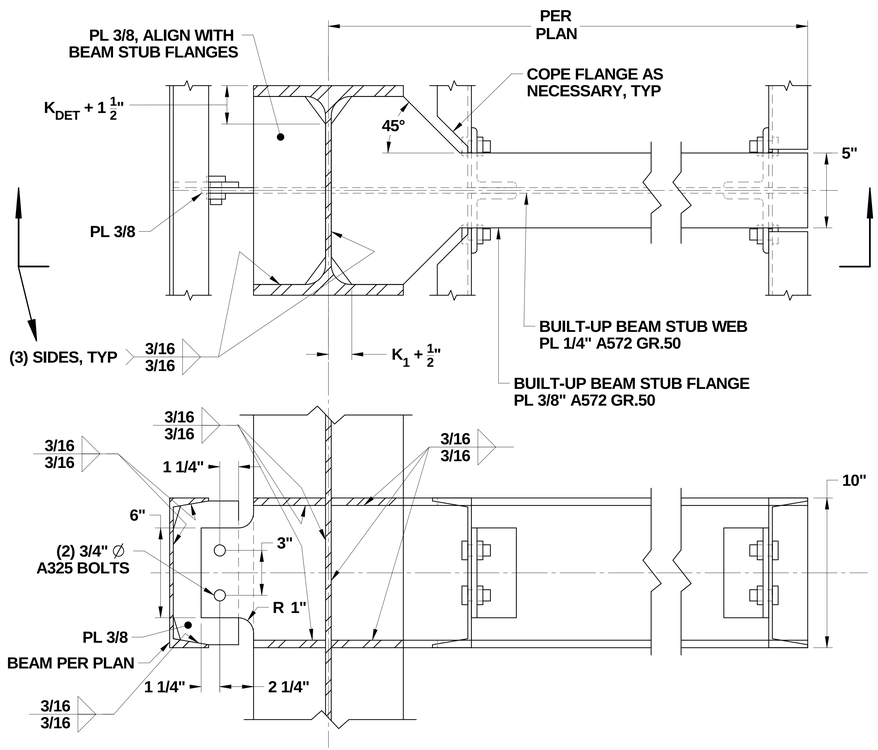

5/20 CATWALK CANTILEVERED BEAM CONNECTION

NOTE: NO BUILT-UP BEAM STUB AT SIM.

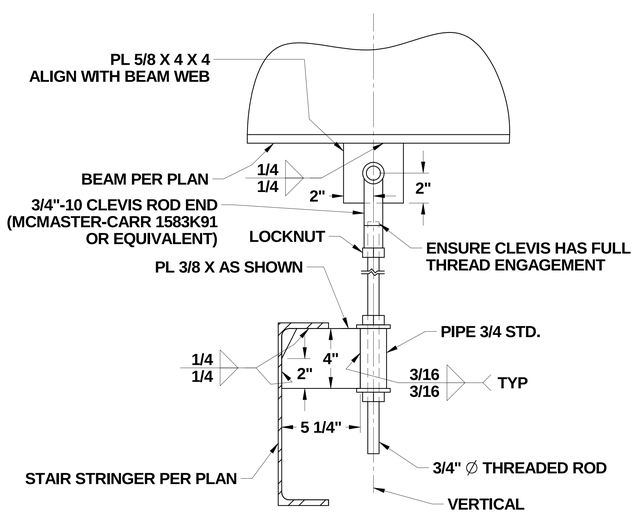

4/20 STAIR STRINGER SUPPORT DETAIL

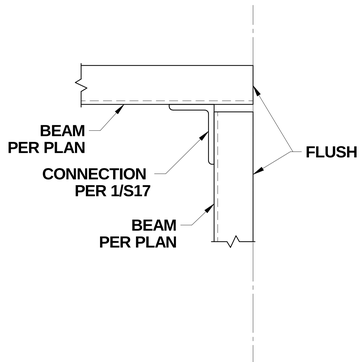

3/20 CHANNEL CORNER CONNECTION

PUGET SOUND NAVAL SHIPYARD
CODE 2370
ENGINEERING DIVISION

NO DEVIATIONS SHALL BE MADE
WITHOUT CODE 2370 APPROVAL

DRAWING NO. 2370 - 1833

TITLE RAE SUPPORT TOWERS (DD5)

SCALE N/A | SHEET 20of 28 | REV. ORIG

TITLE DD5 RAE SUPPORT TOWERS

SHEET 20 | REV. ORIG

DWG. NO. 2370 - 1833

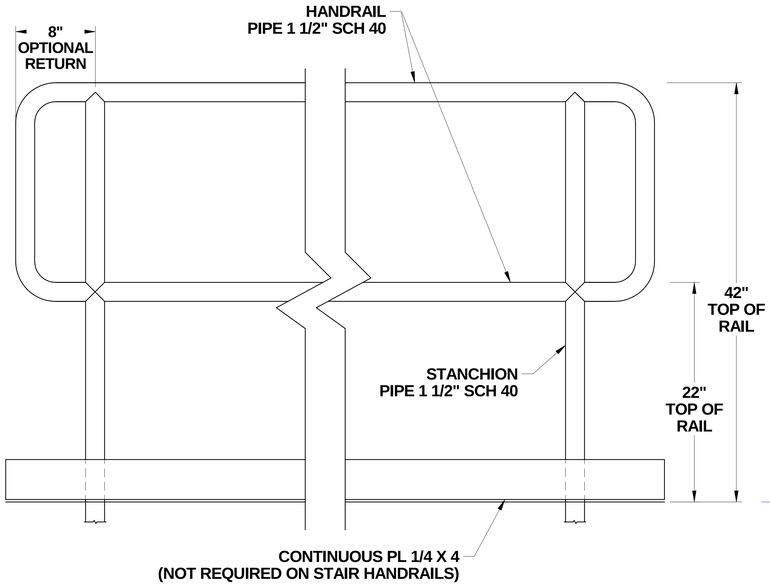

3/21 HANDRAIL ELEVATION

NOTE: HANDRAIL CORNERS MAY BE ROUNDED OR MITRED.
NOTE: HANDRAILS MUST BE FULLY WELDED TO STANCHIONS.

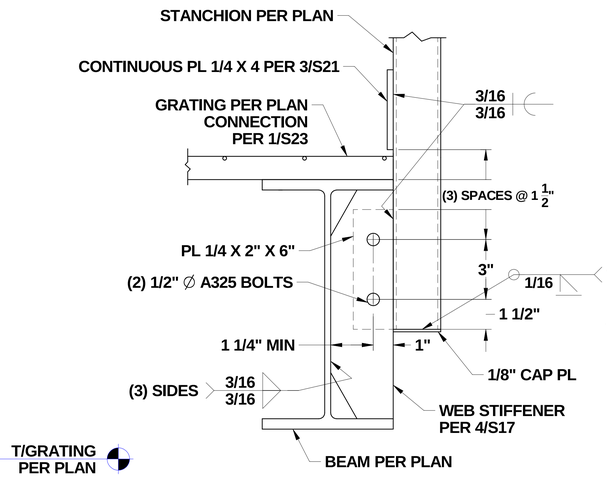

2/21 HANDRAIL CONNECTION TO SUPPORT BEAMS

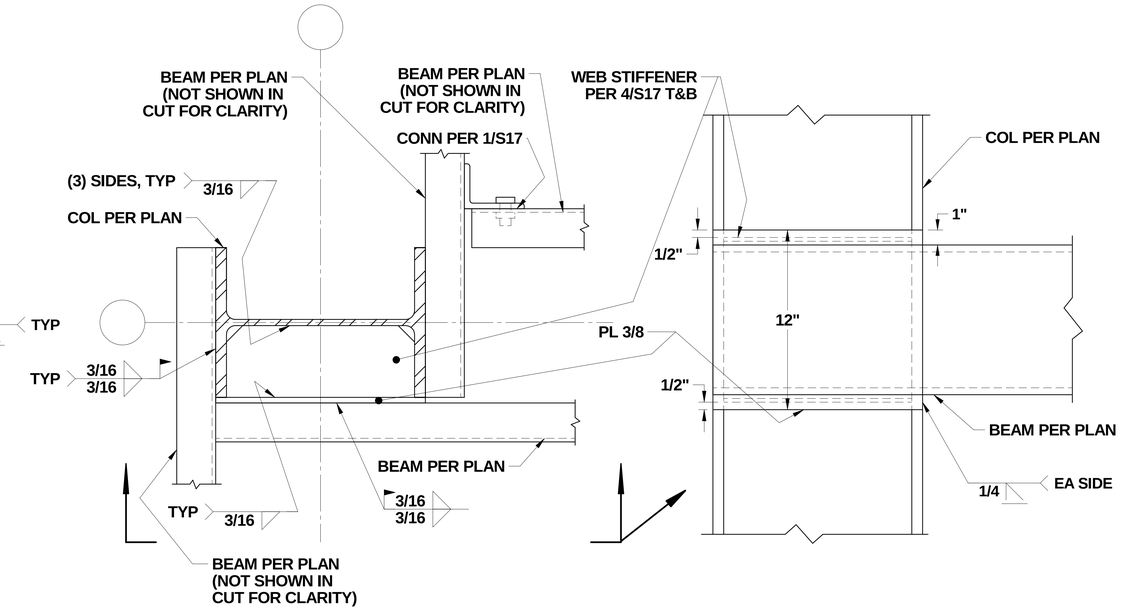

1/21 CATWALK BEAM TO COLUMN CONNECTIONS

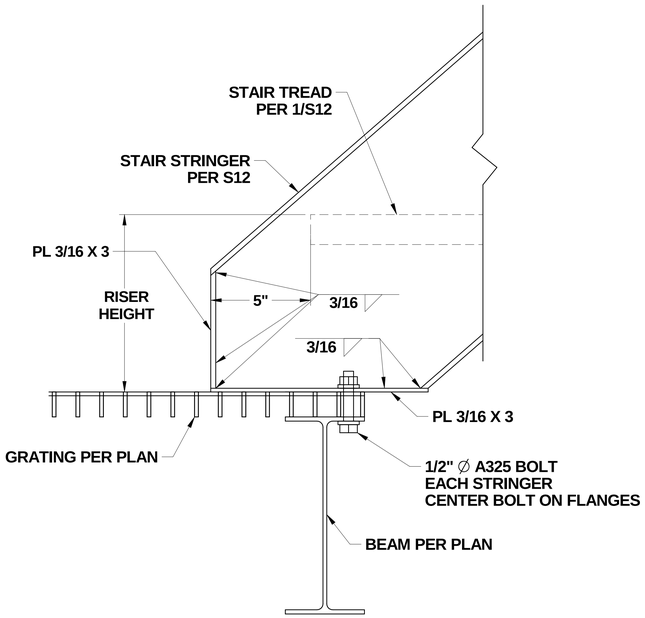

6/21 LOWER STAIR STRINGER TO BEAM CONNECTION

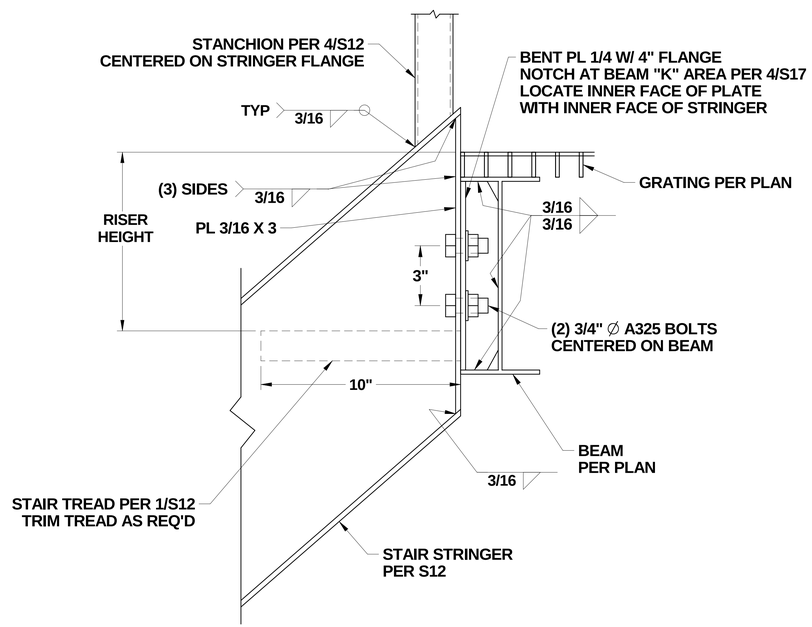

5/21 UPPER STAIR STRINGER TO BEAM CONNECTION

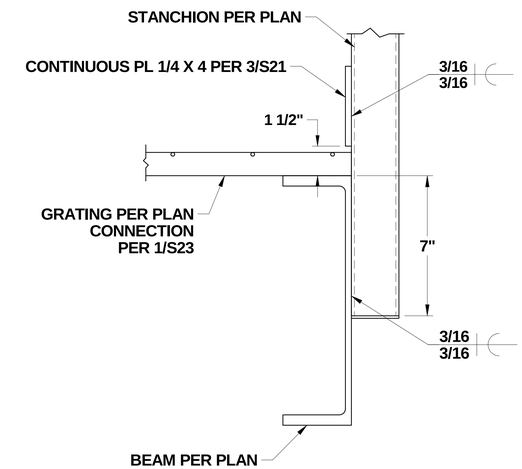

4/21 HANDRAIL CONNECTION TO CHANNEL WEB

NOTE: FOR INFORMATION NOT SHOWN REFERENCE 2/S21.

PUGET SOUND NAVAL SHIPYARD
CODE 2370
ENGINEERING DIVISION

NO DEVIATIONS SHALL BE MADE
WITHOUT CODE 2370 APPROVAL

DRAWING NO. **2370 - 1833**

TITLE **RAE SUPPORT TOWERS (DD5)**

SCALE N/A | **SHEET 21of 28** | REV. **ORIG**

TITLE DD5 RAE SUPPORT TOWERS | REV. ORIG | SHEET 21 | DWG. NO. 2370 - 1833

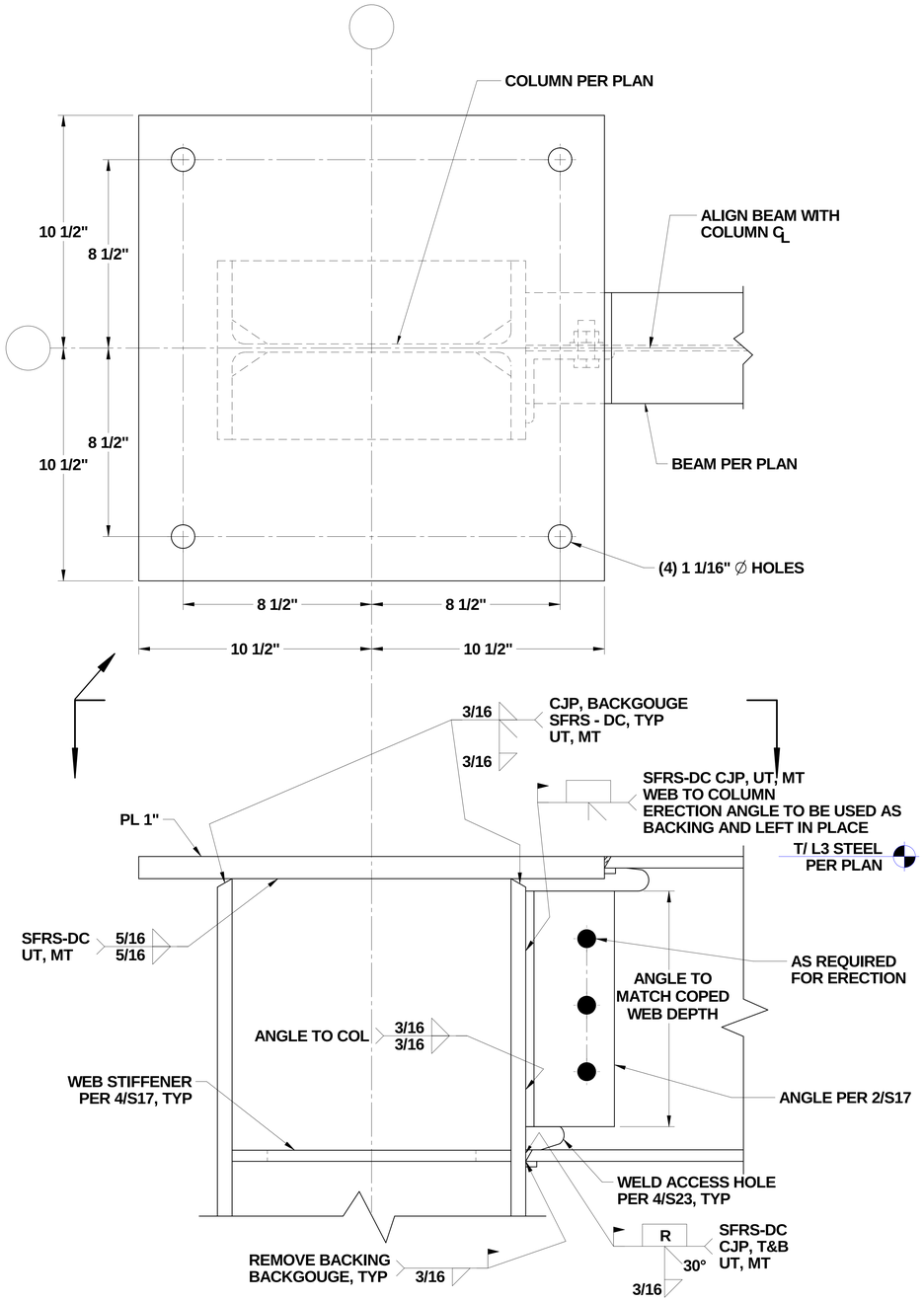

2/22 L3 MOMENT CONNECTION-TO-COLUMN FLANGE

NOTE: FOR INFORMATION NOT SHOWN, REFER TO TYP SHEAR CONNECTION DETAIL.
NOTE: NO WELDING IN THE k-AREA OF THE COLUMN.

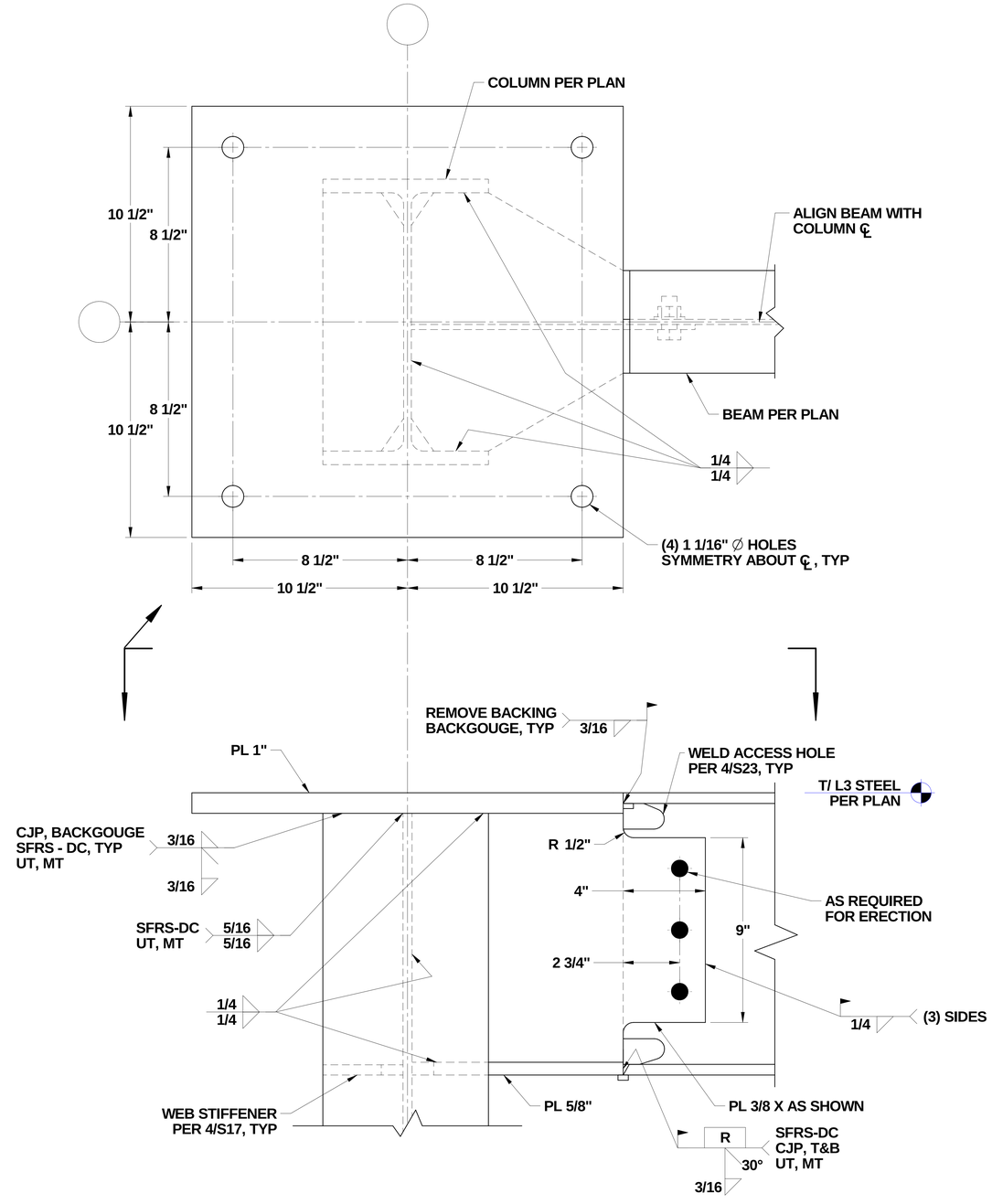

1/22 L3 MOMENT CONNECTION-TO-COLUMN WEB

NOTE: FOR INFORMATION NOT SHOWN, REFER TO TYP SHEAR CONNECTION DETAIL.
NOTE: NO WELDING IN THE k-AREA OF THE COLUMN.

PUGET SOUND NAVAL SHIPYARD
CODE 2370
ENGINEERING DIVISION

NO DEVIATIONS SHALL BE MADE WITHOUT CODE 2370 APPROVAL

DRAWING NO. **2370 - 1833**

TITLE **RAE SUPPORT TOWERS (DD5)**

SCALE N/A | **SHEET 22of 28** | REV. **ORIG**

TITLE DD5 RAE SUPPORT TOWERS
REV. ORIG
SHEET 22
DWG. NO. 2370 - 1833

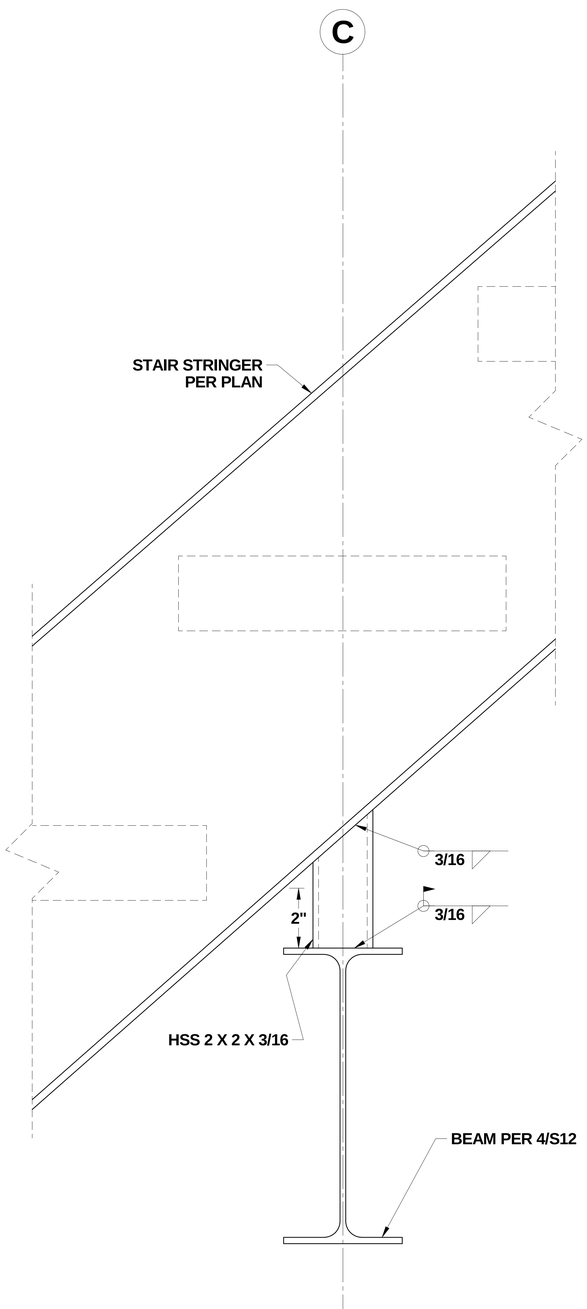

3/23 L0-L1 INTERMEDIATE STAIR SUPPORT

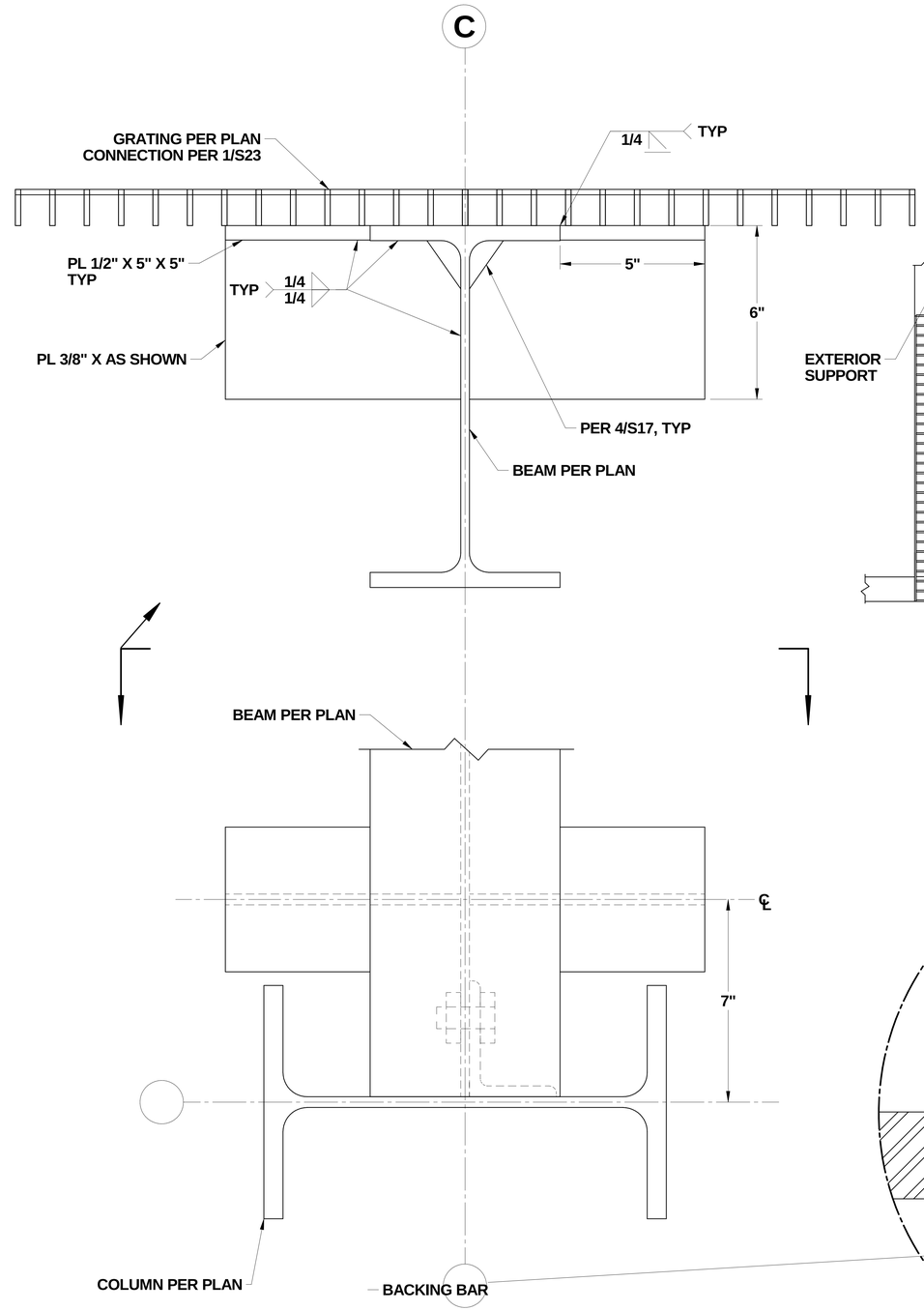

2/23 GRATING SUPPORT AT GRID C COLUMN

NOTE: COLUMN NOT SHOWN IN SECTION FOR CLARITY.

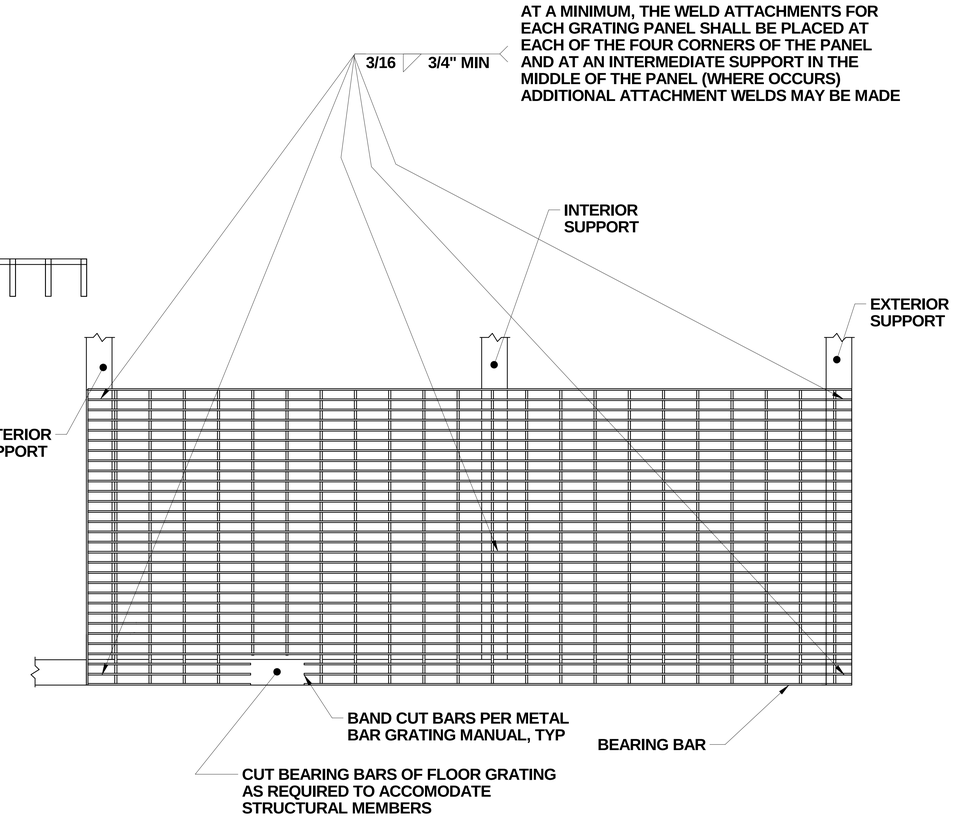

1/23 GRATING CONNECTION DETAIL

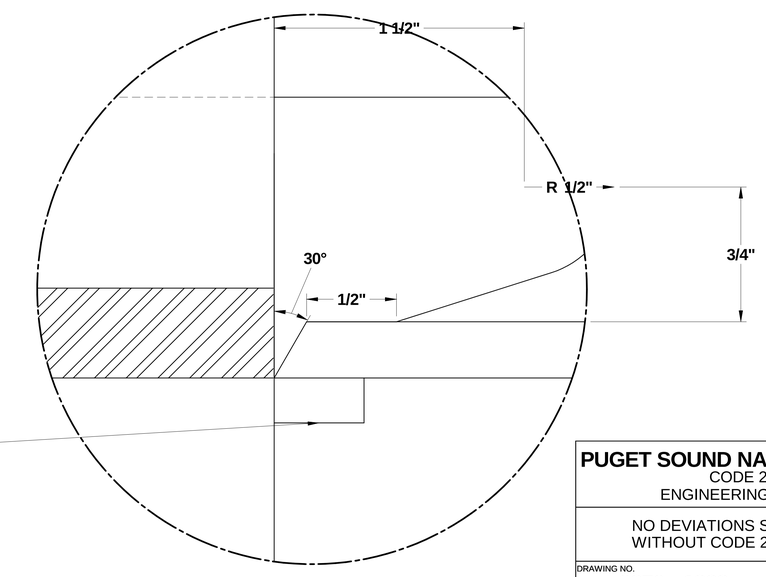

4/23 WELD ACCESS HOLE

NOTE: USE ACCESS HOLE TYPE B. DIMENSIONS IN ACCORDANCE WITH AWS D1.8 / D1.8M SUBCLAUSE 6.10.1.

PUGET SOUND NAVAL SHIPYARD
CODE 2370
ENGINEERING DIVISION

NO DEVIATIONS SHALL BE MADE
WITHOUT CODE 2370 APPROVAL

DRAWING NO. 2370 - 1833

TITLE RAE SUPPORT TOWERS (DD5)

SCALE N/A | SHEET 23of 28 | REV. ORIG

SHEET 23 | REV. ORIG | TITLE DD5 RAE SUPPORT TOWERS | DWG. NO. 2370 - 1833

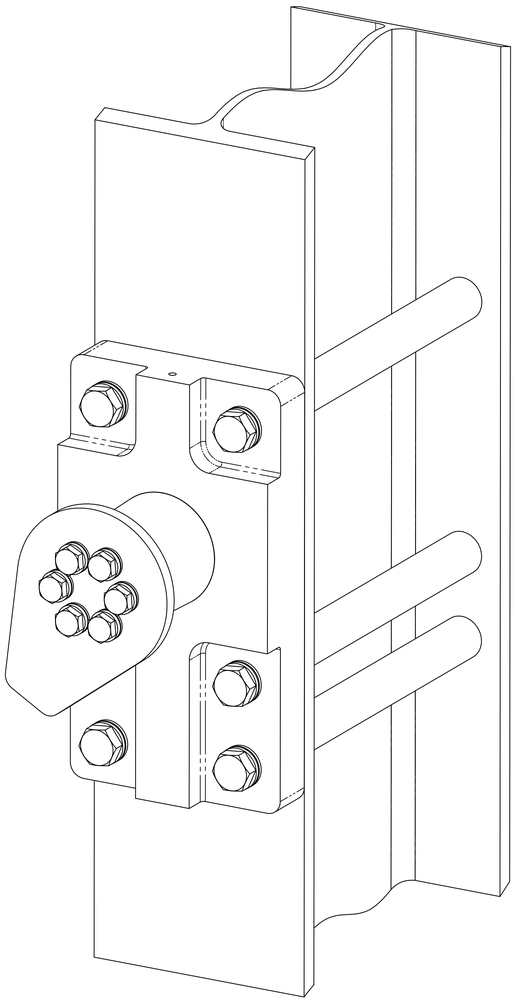

3/24 LIFT LUG - LH

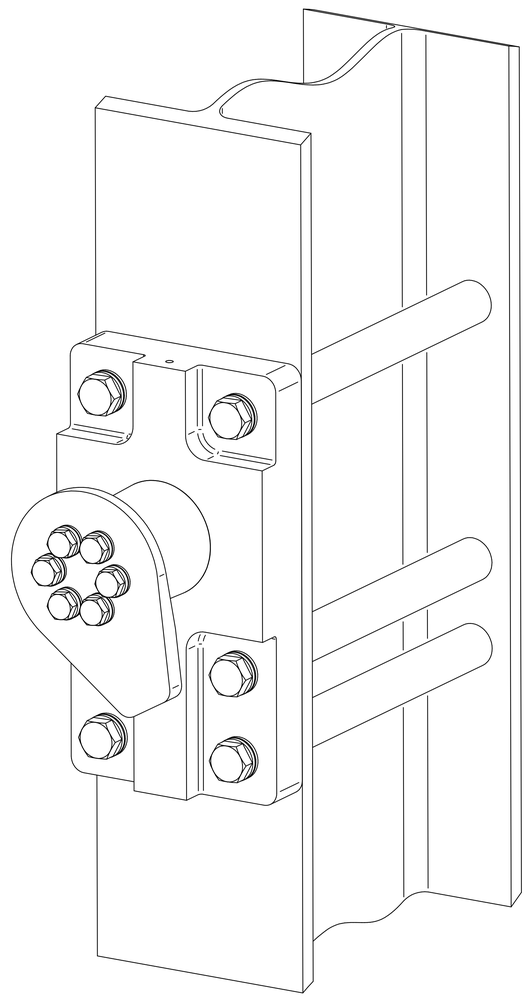

2/24 LIFT LUG - RH

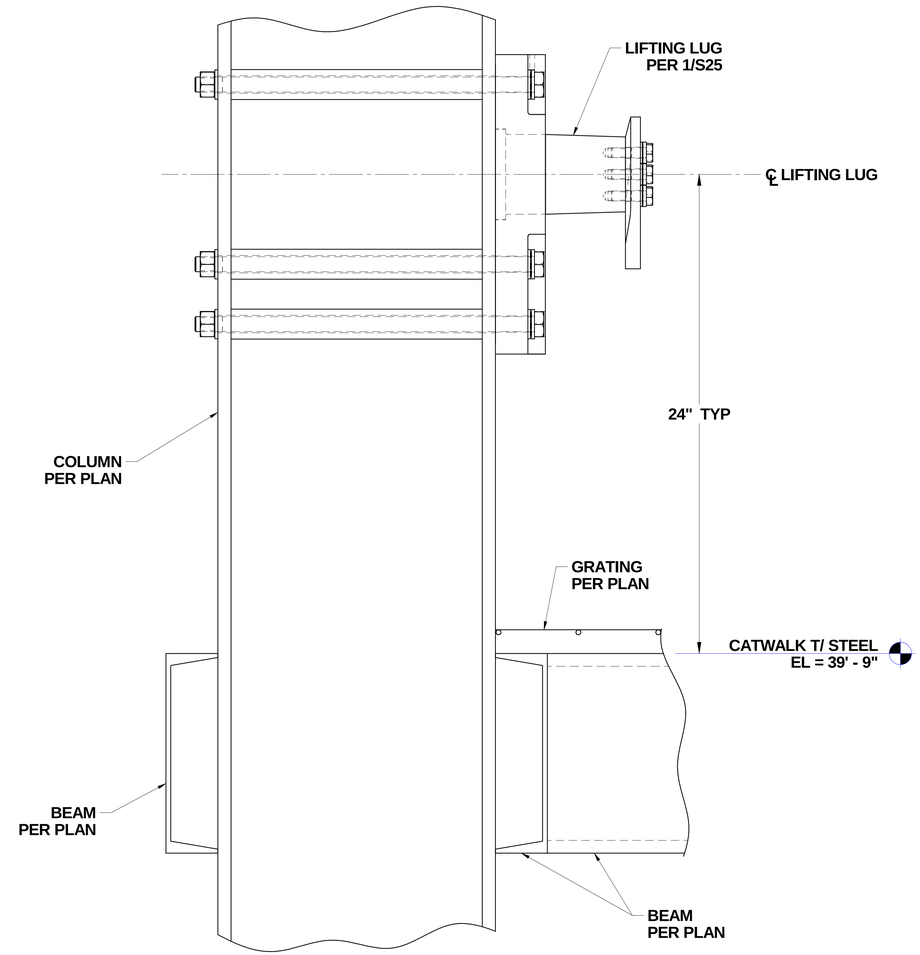

1/24 LIFT LUG PLACEMENT

NOTE: LOCATE HOLES IN COLUMNS PER BASEPLATE DETAIL 1/S26.

PUGET SOUND NAVAL SHIPYARD
CODE 2370
ENGINEERING DIVISION

NO DEVIATIONS SHALL BE MADE WITHOUT CODE 2370 APPROVAL

DRAWING NO. 2370 - 1833

TITLE RAE SUPPORT TOWERS (DD5)

SCALE N/A | SHEET 24of 28 | REV. ORIG

TITLE DD5 RAE SUPPORT TOWERS

SHEET 24 | REV. ORIG

DWG. NO. 2370 - 1833

LIFT LUG GENERAL NOTES

1. THIS SECTION OF THE DRAWING PROVIDES INFORMATION SPECIFIC TO MANUFACTURING A BOLT ON LIFT LUG FOR A SUPPORT TOWER.
2. WHERE STANDARDS OR PROCESS INSTRUCTIONS ARE NOTED, THE LATEST REVISIONS SHALL BE IN EFFECT UNLESS A SPECIFIC REVISION IS SPECIFIED.
3. GEOMETRIC DIMENSIONING AND TOLERANCE (GD&T) ARE PER ANSI/ASME Y14.5M-1994.
4. BREAK ALL SHARP EDGES TO A 1/32" CHAMFER (MINIMUM).
5. MATERIAL SUBSTITUTIONS ARE AUTHORIZED ONLY WITH APPROVAL FROM CODE 2370.24 AT PUGET SOUND NAVAL SHIPYARD.
6. THE JOINT BETWEEN THE SHAFT (PC# 1) AND THE BASE PLATE (PC# 2) IS AN ANSI B4.1 CLASS LN 2 INTERFERENCE FIT. THIS JOINT MAY BE ASSEMBLED USING MECHANICAL MEANS SUCH AS A PRESS OR USING A THERMAL PROCESS SUCH AS FREEZING THE SHAFT (PC#1) AND/OR HEATING THE BORE ON THE BASE PLATE (PC#2). IF THE THERMAL PROCESS IS USED, THE TEMPERATURE DIFFERENCE REQUIRED IS APPROXIMATELY 100 DEGREES FAHRENHEIT (I.E. THE BASE PLATE (PC# 2) SHOULD BE 100 DEGREES WARMER THAN THE SHAFT (PC# 1). IF THE BASE PLATE IS HEATED, ENSURE THAT IT IS SLOW COOLED USING AN INSULATED BLANKET.
7. THE 1/2" TAPPED HOLES SHALL BE THREADED SUCH THAT THE FIT IS THE SAME AS REQUIRED FOR HOT-DIPPED GALVANIZED ASTM A325 BOLTS WITH HOT-DIPPED GALVANIZED NUTS PER ASTM A563, PARAGRAPH 7.4.1. ENSURE THAT THREADED HOLES IN THE SHAFT (PC# 1) ARE PROPERLY THREADED / GROOMED USING A TEST BOLT LUBRICATED WITH MOLYKOTE 37 OR EQUIVALENT. FULLY INSERT AND REMOVE A LUBRICATED 1/2" HOT –DIPPED GALVANIZED TEST BOLT FROM EACH TAPPED HOLE IN THE END OF THE SHAFT (PC# 1).
8. **LOAD TEST REQUIREMENTS FOR SAFETY HOIST RING ATTACHMENT HOLE**

   A. PERFORM LOAD TEST ON THE HOIST RING ATTACHMENT HOLE PER REFERENCE C (DWG. 2301-3411). EST. WEIGHT = 95 LBS

   B. CONTRACTOR SHALL PROVIDE WRITTEN DOCUMENTATION THAT THE ABOVE LOAD TEST AND NDT REQUIREMENTS WERE SATISFACTORILY MET.

   C. AFTER SATISFACTORY LOAD TEST, USING A DIE STAMP, MARK THE FOLLOWING INFORMATION ON OR NEAR EACH SAFETY HOIST RING ATTACHMENT HOLE AS SHOWN IN VIEW 1/S25 USING ¼" TALL (MIN) LETTERS:

   LIFT POINT

   GPS CAP: 120 POUNDS

   WEIGHT: XX POUNDS

   TEST DATE: MM-DD-YYYY

9. **LOAD TEST REQUIREMENTS FOR LIFT LUG ASSEMBLY**

   A. WEIGH THE TOWER PER 2370-1835, IF THE WEIGHT EXCEEDS THE CALCULATED WEIGHT ESTIMATES LISTED IN 2370-1835 CONTACT PSNS CODE 2370.24 FOR REVISED LOAD TEST WEIGHTS.

   B. PERFORM LOAD TEST ON THE ASSEMBLED SHAFT AND BASE PLATE BY BOLTING THE BASE PLATE TO A SUITABLE SURFACE USING CONTRACTOR PROVIDED BOLTS THAT ARE EQUIVALENT IN STRENGTH TO ASTM A325 BOLTS. APPLY A LOAD OF 33000 LB + 1100 LB / - 0 LB TO THE END OF THE SHAFT (PC# 1) ORIENTED AS SHOWN IN VIEW 1/S25 USING A HYDRAULIC JACK, WIRE ROPE, OR OTHER MEANS. HOLD THE TEST LOAD FOR A MINIMUM OF TEN MINUTES.

   C. AFTER THE LOAD TEST, PERFORM A VISUAL INSPECTION (VT) AND A MAGNETIC PARTICLE INSPECTION (MT) OF THE BASE PLATE / SHAFT ASSEMBLY PER REFERENCE A (NAVSEA T9074-AS-GIB-010/271). ACCEPTANCE CRITERIA FOR THE VT AND MT SHALL BE PER REFERENCE B (MIL-STD-2035).

   D. CONTRACTOR SHALL PROVIDE WRITTEN DOCUMENTATION THAT THE ABOVE LOAD TEST AND NDT REQUIREMENTS WERE SATISFACTORILY MET. ON THE WRITTEN DOCUMENTATION, SERIALIZE THE LIFT LUGS, LABELING THEM LIFT LUG – 1 THROUGH LIFT LUG – 8.

   E. AFTER SATISFACTORY LOAD TEST, USING A DIE STAMP, MARK THE FOLLOWING INFORMATION ON THE FACE OF THE BASE PLATE AS SHOWN IN VIEW 1/S25 USING ¼" TALL (MIN) LETTERS:

   LIFT LUG – X

   DRAWING NO. 2370-1833

   GPS CAP: 22,000 POUNDS

   (ENGINEERED FOR A 4 POINT LIFT)

   TEST DATE: MM-DD-YYYY

REFERENCES

A. NAVSEA TECHNICAL PUBLICATION T9074-AS-GIB-010/271, REQUIREMENTS FOR NONDESTRUCTIVE TESTING METHODS

B. MIL-STD-2035 NONDESTRUCTIVE TESTING ACCEPTANCE CRITERIA

C. PSNS DWG. 2301-3411, TORQUE-BASED PROOF TEST FOR SAFETY HOIST RING LIFT HOLES.

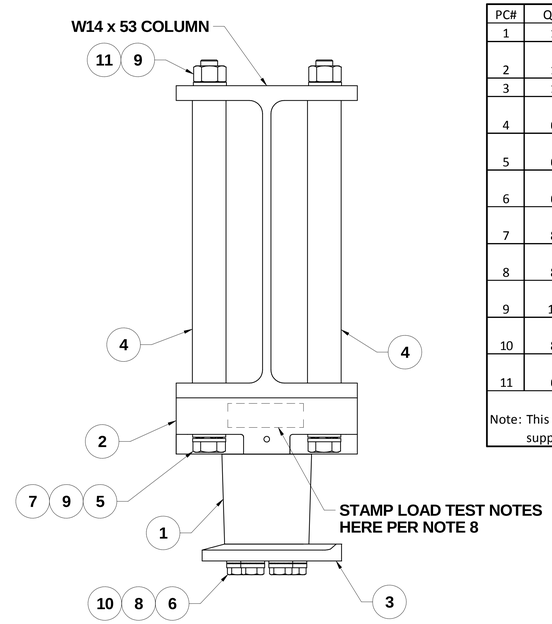

PC#	QTY	Description & Size	Material	Material Spec	Sheet	Comments
1	1	Shaft	Steel	AISI 4140 Cold Finished	26	Minimum Yield Strength 90 ksi.
2	1	Base Plate	Steel	ASTM A656 Gr. 80 OR MIL-S-16216, HY-80	26	Minimum Yield Strength 80 ksi.
3	1	Retainer Plate	Steel	ASTM A572 Grade 50	27	
4	6	DOM Spacer Tube	Steel	ASTM A513, Type DOM, Grade 1010/1020	27	Minimum Yield Strength 50 ksi.
5	6	Bolt, Heavy Hex 3/4"-10 UNC x 17" lg	Galvanized Steel	ASTM A325, Type 1	--	Hot Dip Galvanized per ASTM F2329
6	6	Bolt, Heavy Hex 1/2"-13 UNC x 1-3/4" lg	Galvanized Steel	ASTM A325, Type 1	--	Hot Dip Galvanized per ASTM F2329
7	8	Direct Tension Indicating Washer for 3/4" ASTM A325 bolt	Galvanized Steel	ASTM F959	--	Squirter Type. Galvanized per Class 50 of ASTM B695
8	8	Direct Tension Indicating Washer for 1/2" ASTM A325 bolt	Galvanized Steel	ASTM F959	--	Squirter Type. Galvanized per Class 50 of ASTM B695
9	16	Hardened Flat Washer for 3/4" bolt	Galvanized Steel	ASTM F436, Type 1	--	Hot Dip Galvanized
10	8	Hardened Flat Washer for 1/2" bolt	Galvanized Steel	ASTM F436, Type 1	--	Hot Dip Galvanized
11	6	NUT, HEX 3/4"-10 UNC	Galvanized Steel	ASTM A563, Type 1	--	Hot Dip Galvanized per ASTM F2329

Note: This parts list is for one complete lift lug assembly (including spare washers). A total of eight of these lift lug assemblies are required for the two RAE support towers. The total quantity of material required is eight times the quantities listed in the table above.

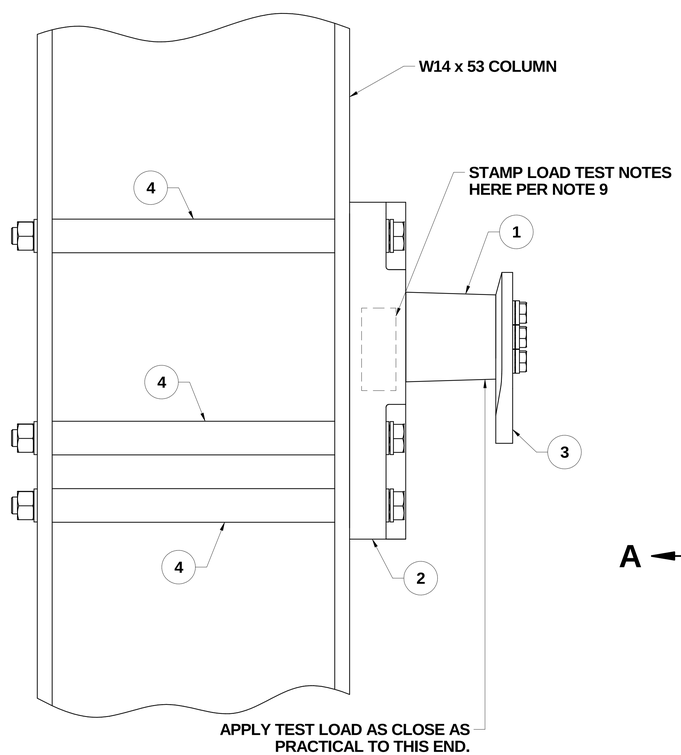

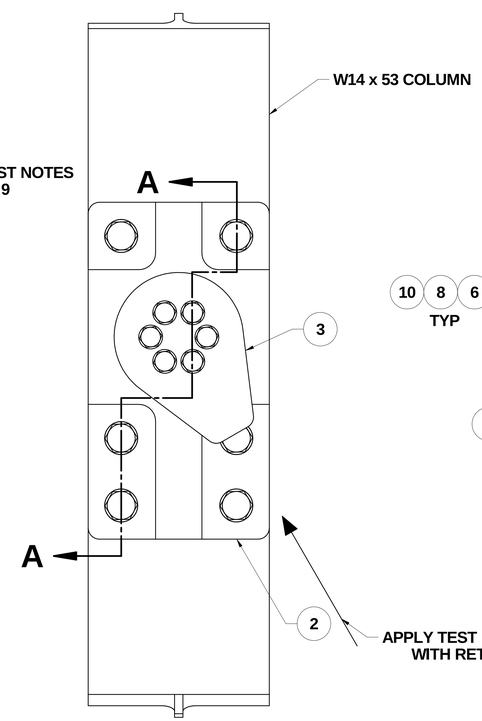

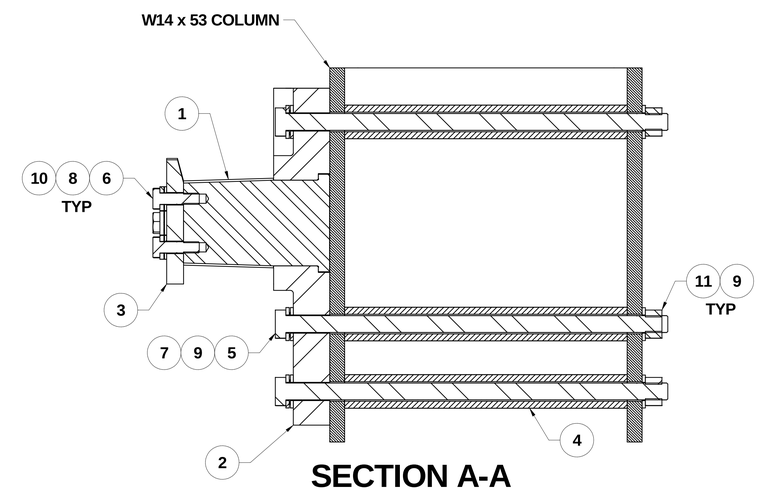

1/25 **LIFT LUG ARRANGEMENT (RH SHOWN)**

LH SAME EXCEPT THE RETAINER PLATE IS ROTATED TO THE LEFT.

PUGET SOUND NAVAL SHIPYARD
CODE 2370
ENGINEERING DIVISION

NO DEVIATIONS SHALL BE MADE WITHOUT CODE 2370 APPROVAL

DRAWING NO. **2370 - 1833**

TITLE **RAE SUPPORT TOWERS (DD5)**

SCALE N/A | **SHEET 25of 28** | REV. **ORIG**

TITLE DD5 RAE SUPPORT TOWERS | REV. ORIG | SHEET 25

DWG. NO. 2370 - 1833

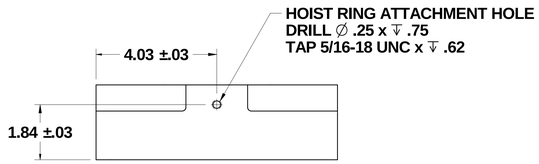

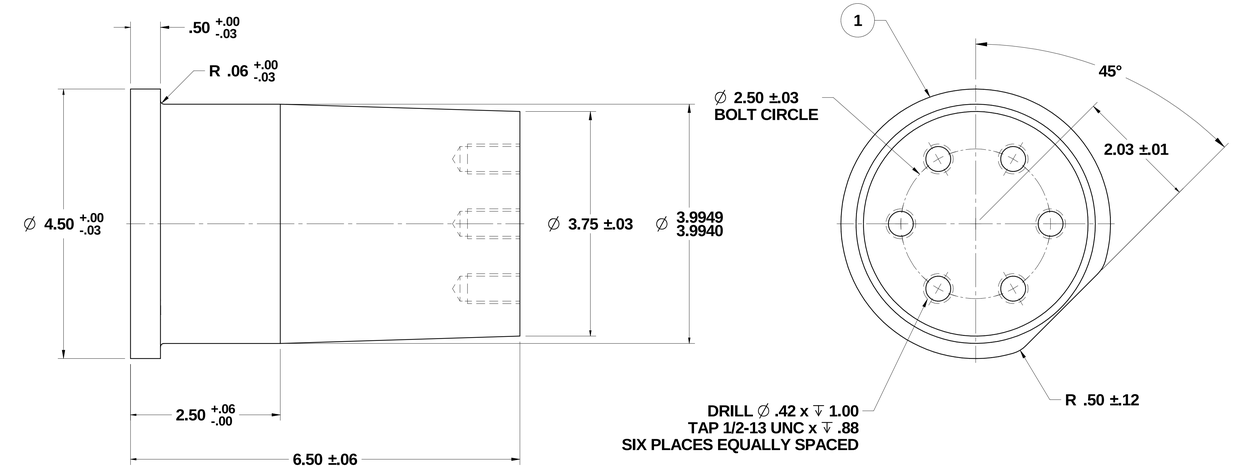

2/26 **SHAFT DETAIL**

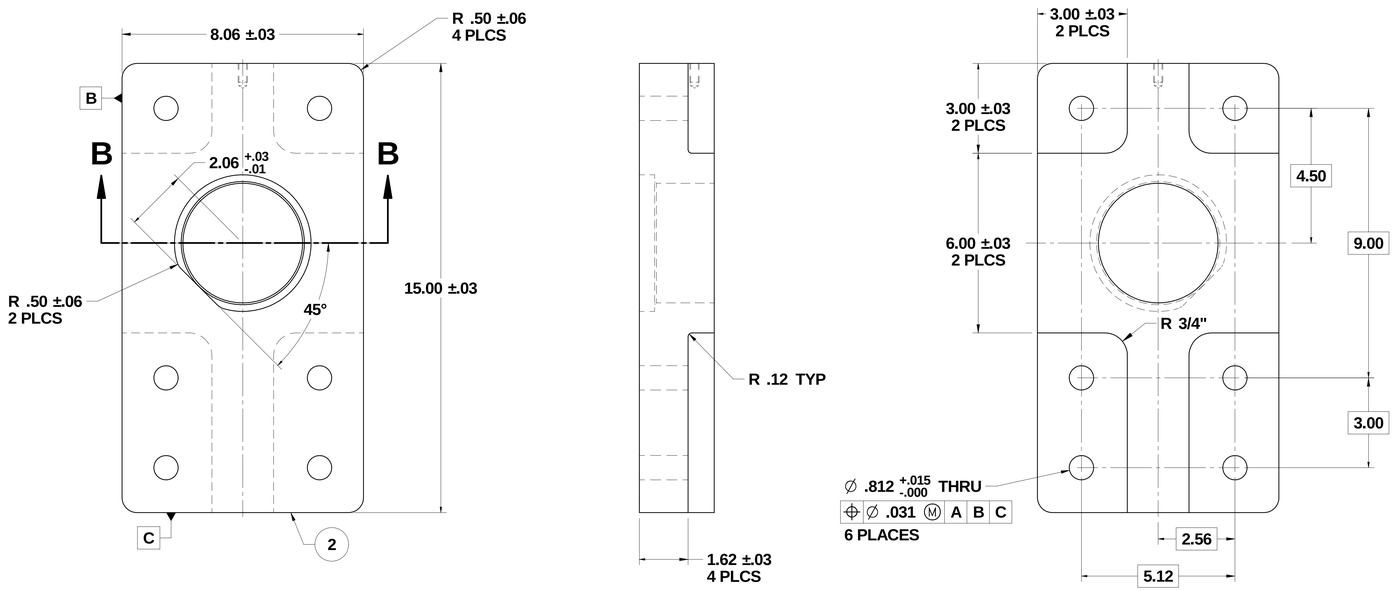

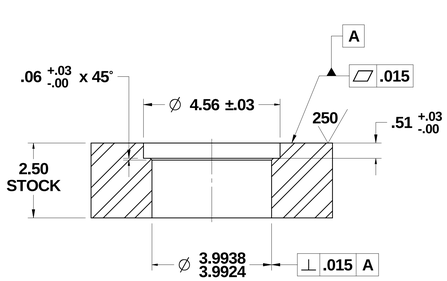

SECTION B-B

1/26 **BASEPLATE DETAIL**

PUGET SOUND NAVAL SHIPYARD CODE 2370 ENGINEERING DIVISION	
NO DEVIATIONS SHALL BE MADE WITHOUT CODE 2370 APPROVAL	
DRAWING NO. **2370 - 1833**	
TITLE **RAE SUPPORT TOWERS (DD5)**	
SCALE N/A	**SHEET 26of 28** REV. **ORIG**

TITLE DD5 RAE SUPPORT TOWERS
REV. ORIG
SHEET 26
DWG. NO. 2370 - 1833

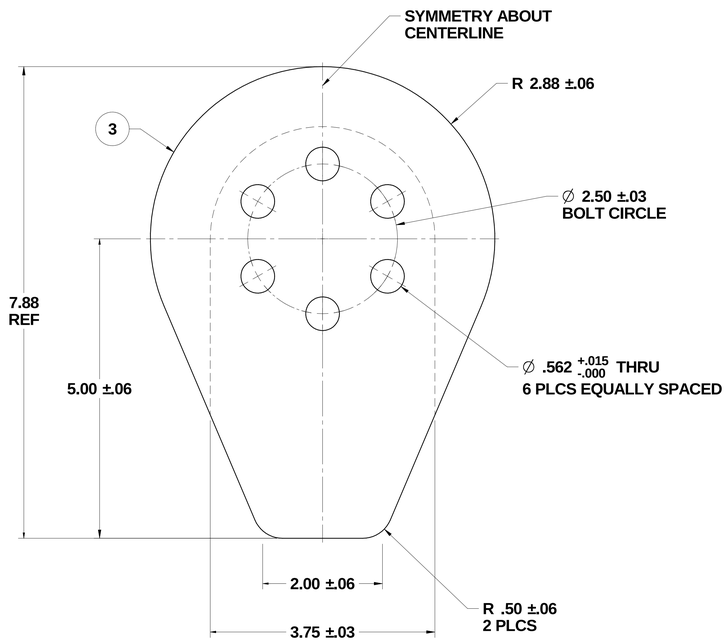

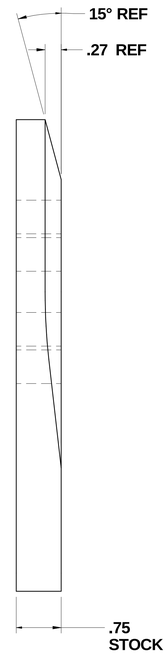

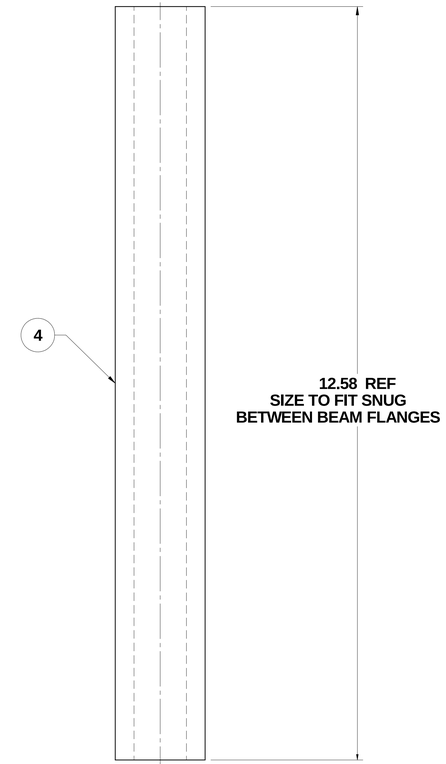

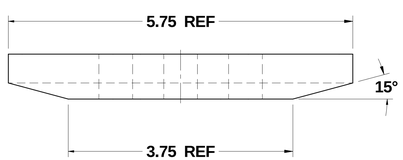

1/27 **RETAINER PLATE DETAIL**

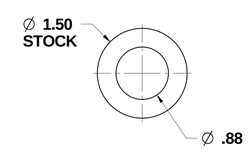

2/27 **SPACER TUBE DETAIL**

PUGET SOUND NAVAL SHIPYARD
CODE 2370
ENGINEERING DIVISION

NO DEVIATIONS SHALL BE MADE
WITHOUT CODE 2370 APPROVAL

DRAWING NO. **2370 - 1833**

TITLE **RAE SUPPORT TOWERS (DD5)**

SCALE N/A | **SHEET 27of 28** | REV. **ORIG**

TITLE DD5 RAE SUPPORT TOWERS
REV. ORIG
SHEET 27
DWG. NO. 2370 - 1833

TOWER STRUCTURE

INSPECTION PROCEDURE FOR CRITICAL DIMENSIONS

1. PLACE THE TOWERS ON A LEVEL SURFACE.
2. EVALUATE THE CORNER SUPPORT COLUMNS OF EACH TOWER AND ENSURE THAT EACH INSTALLED COLUMN IS ALIGNED SUCH THAT THE VARIATION IN STRAIGHTNESS MEASURED FROM THE BASE OF THE TOWER TO THE TOP OF THE TOWER IS LESS THAN 1/1000TH OF THE AXIAL LENGTH (ABOUT 9/16" OVER THE ASSEMBLED COLUMN HEIGHT).
3. MEASURE THE DIMENSIONS INDICATED IN THE TABLE. ALL DIMENSIONS ARE FROM GRIDLINE TO GRIDLINE.
4. RECORD MEASUREMENTS IN A TABLE SIMILAR TO THE TABLE SHOWN BELOW. ENSURE THAT THE TOWER # IS CLEARLY MARKED ON THE TABLE. USE THE SAME LABELING SYSTEM AS USED FOR LABELING THE TOWERS SHOWN IN DRAWING 2370-1835 PARAGRAPH 9.C.
5. ALL MEASUREMENTS MUST BE RECORDED IN THE TABLE AND THE TABLE MUST BE VALIDATED AND SIGNED BY A THIRD PARTY INSPECTOR PROVIDING QUALITY ASSURANCE (QA) CERTIFYING COMPLIANCE TO THE REQUIREMENTS OF THIS PROCEDURE AND DIMENSIONAL REQUIREMENTS OF THE DRAWING. PROVIDE PHOTOGRAPHS OF THE INSPECTION CONFIGURATION WITH THE SIGNED TABLES.

TOWER STRUCTURE INSPECTION TABLE - ALL DIMENSIONS ARE IN INCHES			
TOWER #:			
LOCATION	ALLOWED MINIMUM	ALLOWED MAXIMUM	ACTUAL MEASURED
GROUND DIMENSIONS			
DIMENSION GA	150.9375	151.0625	
DIMENSION GB	150.9375	151.0625	
DIMENSION GC	338.9360	339.0610	
DIMENSION GD	338.9360	339.0610	
LEVEL 3 DIMENSIONS			
DIMENSION L3A	150.9375	151.0625	
DIMENSION L3B	150.9375	151.0625	
DIMENSION L3C	338.9360	339.0610	
DIMENSION L3D	338.9360	339.0610	

AUTHORIZED QA INSPECTOR NAME: _____

AUTHORIZED QA INSPECTOR SIGNATURE: _____

DATE OF SIGNATURE: _____

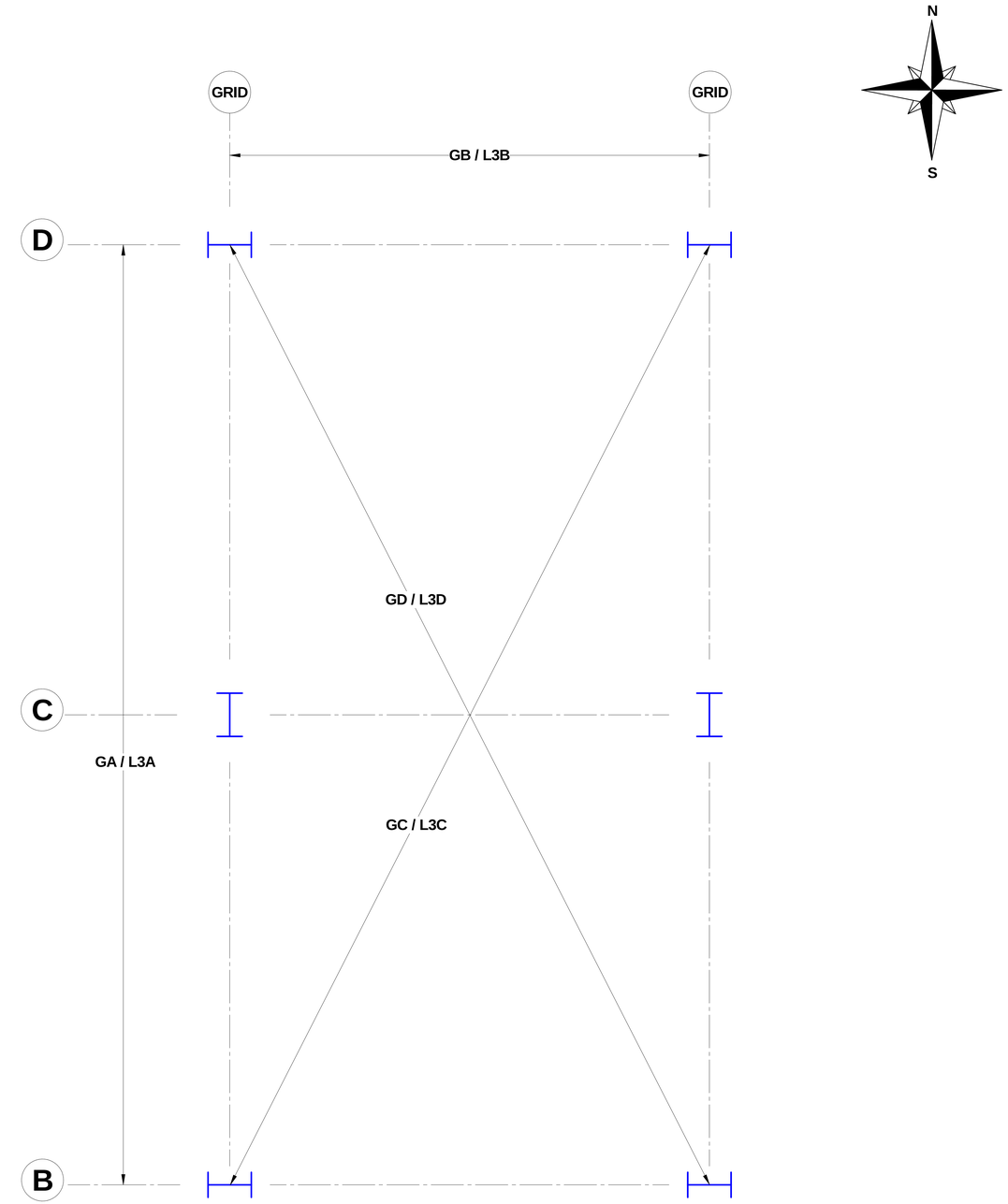

PUGET SOUND NAVAL SHIPYARD
CODE 2370
ENGINEERING DIVISION

NO DEVIATIONS SHALL BE MADE WITHOUT CODE 2370 APPROVAL

DRAWING NO. 2370 - 1833

TITLE RAE SUPPORT TOWERS (DD5)

SCALE N/A | SHEET 28of 28 | REV. ORIG

TITLE DD5 RAE SUPPORT TOWERS

REV. ORIG | SHEET 28

DWG. NO. 2370 - 1833

GENERAL NOTES

1. This drawing provides construction details for two bridge/tower bearing connection assemblies. The bearings detailed in this drawing are intended to be used with the bridge and tower structures listed in the references.

2. **MANUFACTURING REQUIREMENTS:**
   - A. Unless specified otherwise, all tolerances are specified in the drawing block in the lower right corner of the drawing. Geometric Dimensioning and Tolerance (GD&T) are per ANSI/ASME Y14.5M – 1994.
   - B. Break all sharp edges to a 1/32" chamfer (minimum) and remove all weld splatter from exposed surfaces.

3. **MATERIAL REQUIREMENTS:**
   - A. Material specifications are shown in the Bill of Material on sheet 3 and sheet 8 of this drawing.
   - B. Bearing material (Polytron) and shear pin is supplied by RJ Watson. The maximum loads imparted on the bearing and shear pin are:
     - 1) Max compressive bearing load: 249.8 kip
     - 2) Max shear load on pin: 114.4 kip

A

4. **WELDING REQUIREMENTS:**
   - A. Welding performed by contractor shall comply with welding procedure and performance requirements of ANSI/AWS D1.1 (Reference A).
   - B. Weld symbols shown are in accordance with ANSI/AWS A2.4 (Reference B).
   - C. Visually inspect all welds in accordance with ANSI/AWS D1.1, (Reference A) for Steel with the following exception: No undersized welds are allowed and no porosity greater than 1/8" is allowed.
   - D. Weld sizes shown are minimum acceptable sizes.
   - E. Welds shall be sequenced to minimize distortion. Where distortion does occur, straightening per ANSI/AWS D1.1 (Reference A) shall be performed to achieve tolerances of the drawing.

5. **SURFACE FINISH REQUIREMENTS:**
   - A. All machined surfaces shall have a surface roughness of 125 or better.
   - B. Welded surfaces on stainless material shall be free of cracks, craters, burrs, sharp edges, weld splatter and effects that would cause penetrant indications. The weld surface shall be generally smooth to the touch. A large amount of contour grinding may be necessary depending on the welding process.
   - C. Non-welded steel surfaces shall be free of weld splatter, deep scratches, burrs, loose rust, and in general meet an RA (roughness average) of 250 surface finish allowing surface to be easily cleaned using a clean cloth and a cleaning solution.
   - D. Paint the bearing connections per the applicable instructions in the Requirements Document (Ref G.). Do not paint the fasteners or the Polytron Discs (PC# 2).

A

6. **IDENTIFICATION REQUIREMENTS:**
   - A. Contractor shall stamp the following information on each bearing top plate in ¼" tall (min) lettering in a location that is easily visible:

     DWG. 2370-1834
     BEARING [1 or 2 as applicable]

7. **CERTIFICATION OF COMPLIANCE:**
   - A. Contractor is to provide written certification that the bearings meet the requirements of this drawing and all dimensions are within tolerance.

REFERENCES

A. ANSI/AWS D1.1; Structural Welding Code - Carbon Steel
B. ANSI/AWS A2.4; Standard Symbols For Welding, Brazing And Nondestructive Examination
C. PSNS Drawing 2370-1830; RAE Bridge (DD1)
D. PSNS Drawing 2370-1831; RAE Bridge (DD5)
E. PSNS Drawing 2370-1832; RAE Support Towers (DD1)
F. PSNS Drawing 2370-1833; RAE Support Towers (DD5)
G. PSNS Drawing 2370-1835; RAE Bridge and Towers General Notes and Specifications

A

REVISIONS

SYMB	REV	DESCRIPTION	DATE	CHANGE BY	APPROVAL
A	A	1. Changed PC 3 top plate and PC 8 clamp jaw material to A514 (Was A572). 2. Change capscrew to (PC 15) 1-8 UNC (Was 3/4-10) 3. Added 63 finish to radiused area on the clamp jaw. 4. Changed Max loads in Note 3B. 5. Updated References to include the new bridge for DD1. All the above changes were created due to increased seismic loading predicted by analysis.	9/25/2014	Mark T Sorna /S/	Jim Byrnes /S/

DISTRIBUTION STATEMENT: N/A

A.D.C. REVIEW		
	SIGNATURE	DATE
	Jim Byrnes /S/	9/12/2013

CONCURRENCE		
CODE	SIGNATURE	DATE

/S/ SIGNATURE ON FILE APPROVAL

	SIGNATURE	DATE
BRANCH SUPV.	Jim Byrnes /S/	9/12/2013
CHECKED	Brent Meacham /S/	9/12/2013
DRAWN		
DRAWN	Mark Sorna /S/	9/12/2013
DESIGNED	Mark Sorna /S/	9/12/2013
FILE PATH		

PUGET SOUND NAVAL SHIPYARD
CODE 2370
ENGINEERING DIVISION

NO DEVIATIONS SHALL BE MADE WITHOUT CODE 2370 APPROVAL

Unless otherwise specified, dimensions are in inches.

Decimals:
X.X = ±0.1
X.XX= ±0.06
X.XXX = ±0.005
X.XXXX = ±0.0005

Fractions = ±1/16
Angles = ±1/2°

Drawing dimensional and geometric tolerances per ASME Y14.5M-1994

DRAWING NO. **2370-1834** | RF #

TITLE **Bridge / Tower Connection**

SCALE AS SHOWN | **Sheet 1 of 8** | REV. **A**

SHEET 1 | REV. A

TITLE Bridge / Tower Connection

DWG. NO. 2370-1834

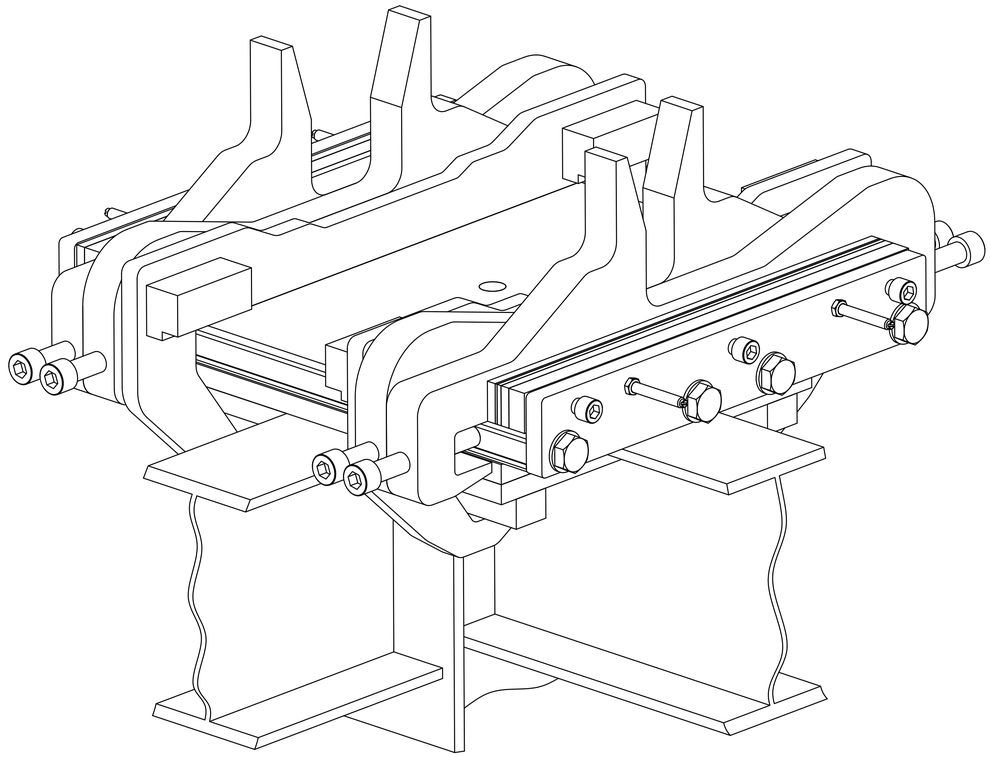

ISOMETRIC VIEW 9C

BEARING 1 ARRANGEMENT
(SEE SHEET 2)

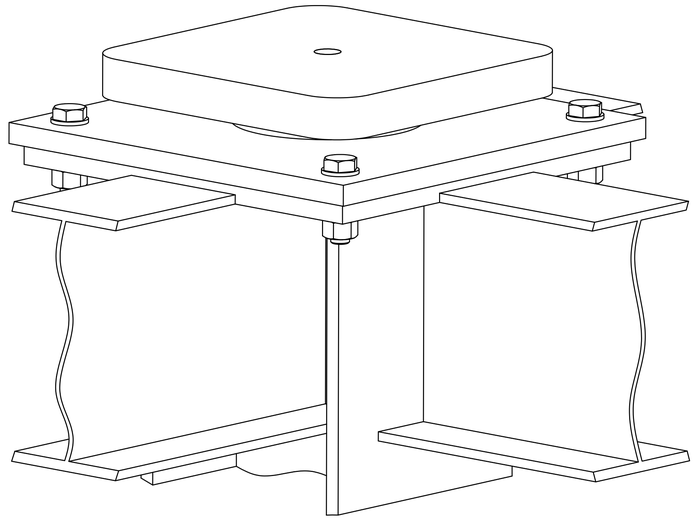

ISOMETRIC VIEW 7C

BEARING 2 ARRANGEMENT
(SEE SHEET 8)

PUGET SOUND NAVAL SHIPYARD
CODE 2370
ENGINEERING DIVISION

NO DEVIATIONS SHALL BE MADE
WITHOUT CODE 2370 APPROVAL

Unless otherwise specified, dimensions are in inches.

Decimals:

X.X = ±0.1
X.XX= ±0.06
X.XXX = ±0.005
X.XXXX = ±0.0005

Fractions = ±1/16
Angles = ±1/2°

Drawing dimensional and geometric tolerances per ASME Y14.5M-1994

DRAWING NO.	FSR	RF #
2370-1834		

TITLE
Bridge / Tower Connection

SCALE		REV.
AS SHOWN	**Sheet 2 of 8**	**A**

SHEET **2**
REV. **A**
TITLE **Bridge / Tower Connection**
DWG. NO. **2370-1834**

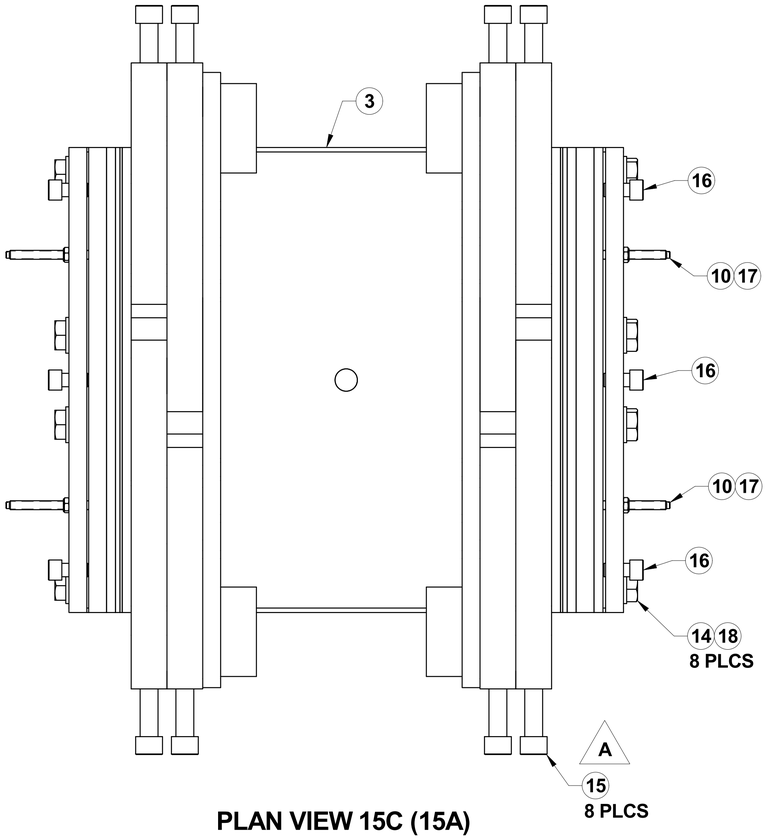

PLAN VIEW 15C (15A)

BEARING 1 ASSEMBLY

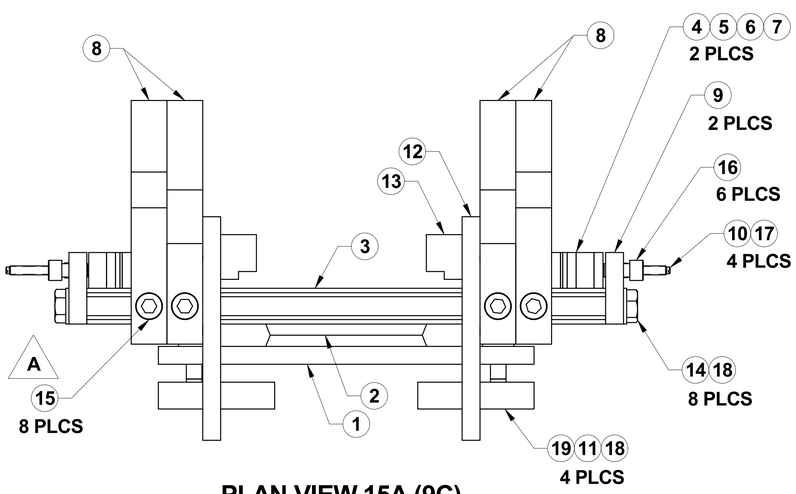

PLAN VIEW 15A (9C)

BEARING 1 ASSEMBLY

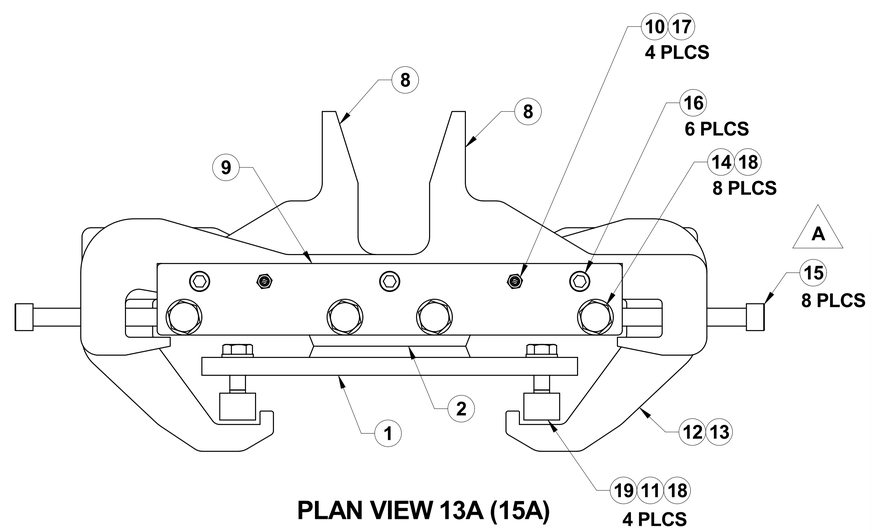

PLAN VIEW 13A (15A)

BEARING 1 ASSEMBLY

BILL OF MATERIAL FOR BEARING 1

PC#	QTY**	DESCRIPTION	MATERIAL	MATERIAL SPEC.	PANEL	REMARKS
1	1	BASEPLATE	STEEL	ASTM A36 OR A572 GR 50	20D	
2	1	POLYTRON DISC	POLYTRON	RJ WATSON SPEC	20B	Supplied by RJ Watson
3	1	TOP PLATE	STEEL	ASTM A514 A	17C	Min. Yield Strength: 100 ksi.
4	6	SHIM, 1/8" THICK	STEEL	ASTM A36	20A	
5	4	SHIM, 1/4" THICK	STEEL	ASTM A36	20A	
6	4	SHIM, 1/2" THICK	STEEL	ASTM A36	20A	
7	4	SHIM, 1" THICK	STEEL	ASTM A36	20A	
8	4	CLAMP JAW	STEEL	ASTM A514 A	24B	Min. Yield Strength: 100 ksi.
9	2	END PLATE	STEEL	ASTM A36 OR A572 GR 50	29A	
10	4	STUD	STEEL	ASTM A193, GRADE B7	30D	
11	4	TAP BLOCK	STEEL	ASTM A36	26D	
12	2	VERTICAL RESTRAINT PLATE	STEEL	ASTM A514 A	34B	Min. Yield Strength: 100 ksi.
13	4	VERTICAL RESTRAINT BLOCK	STEEL	A572 GR 50	34A	
14	8	BOLT, 1-8 UNC x 2-3/4" LG	STEEL	ASTM A325, TYPE 1 GALVANIZED	-	
15	8	CAPSCREW HX SOCKET, 1-8 UNC x 7" LG A	STEEL	SAE GRADE 8, ZINC PLATED	-	FULLY THREADED
16	6	CAPSCREW HX SOCKET, 3/4-10 UNC x 1-1/2" LG	STEEL	SAE GRADE 8, ZINC PLATED	-	FULLY THREADED
17	4	HEX JAM NUT, 1/2-13 UNC	STEEL	SAE GRADE 5, ZINC PLATED	-	
18	12	FLAT WASHER FOR 1" BOLT	STEEL	ASTM F436, TYPE 1 GALVANIZED	-	
19	4	BOLT, 1-8 UNC x 3-1/2" LG	STEEL	ASTM A325, TYPE 1 GALVANIZED	-	

** Quantities listed in this table are for one complete "Bearing 1" assembly. See Sheet 8 for "Bearing 2" Bill of Material.

Unless otherwise specified, dimensions are in inches.

Decimals:

X.X = ±0.1
X.XX= ±0.06
X.XXX = ±0.005
X.XXXX = ±0.0005

Fractions = ±1/16
Angles = ±1/2°

Drawing dimensional and geometric tolerances per ASME Y14.5M-1994

PUGET SOUND NAVAL SHIPYARD
CODE 2370
ENGINEERING DIVISION

NO DEVIATIONS SHALL BE MADE WITHOUT CODE 2370 APPROVAL

DRAWING NO. **2370-1834** | FSR | RF #

TITLE **Bridge / Tower Connection**

SCALE AS SHOWN | **Sheet 3 of 8** | REV. **A**

SHEET 3 | REV. A | TITLE Bridge / Tower Connection | DWG. NO. 2370-1834

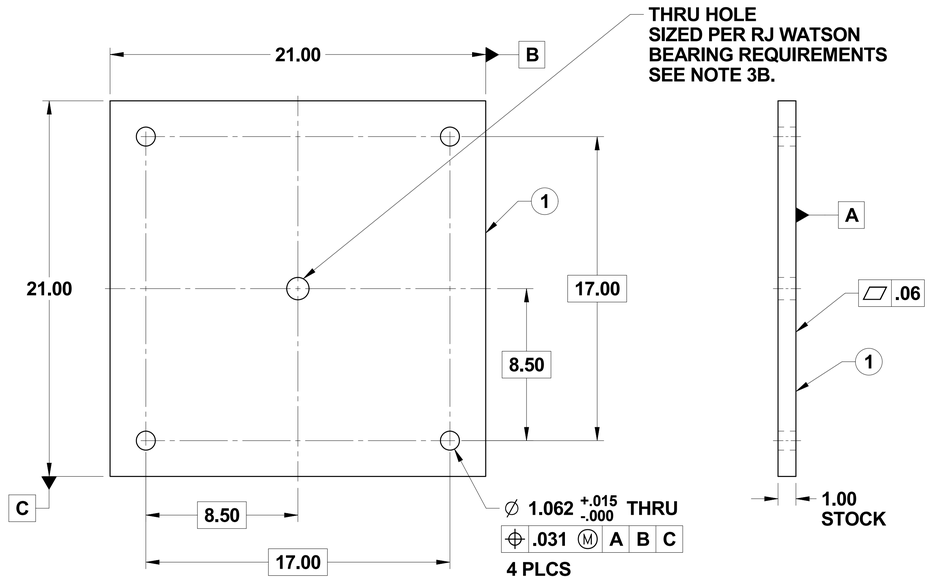

DETAIL VIEW 20D (15A)
PIECE 1 BASEPLATE

DETAIL VIEW 19D (20D)
PIECE 1 BASEPLATE

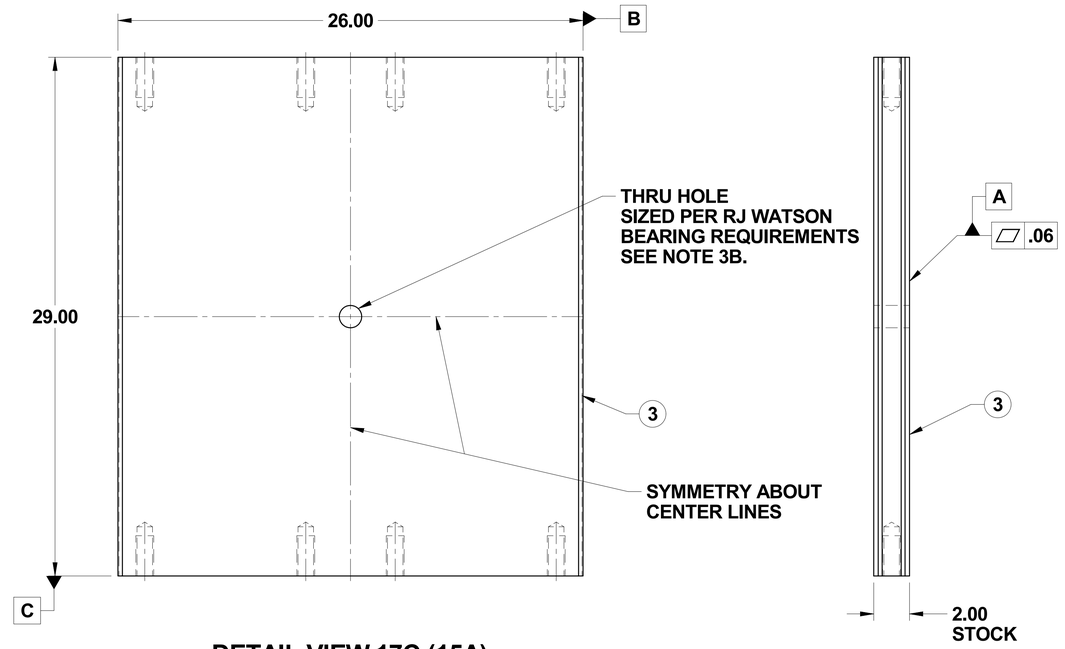

DETAIL VIEW 17C (15A)
PIECE 3 TOP PLATE

DETAIL VIEW 16C (17C)
PIECE 3 TOP PLATE

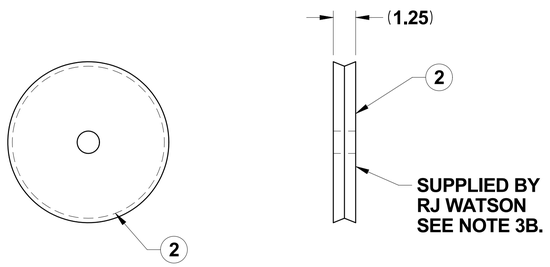

DETAIL VIEW 20B (15A)
PIECE 2 POLYTRON DISC

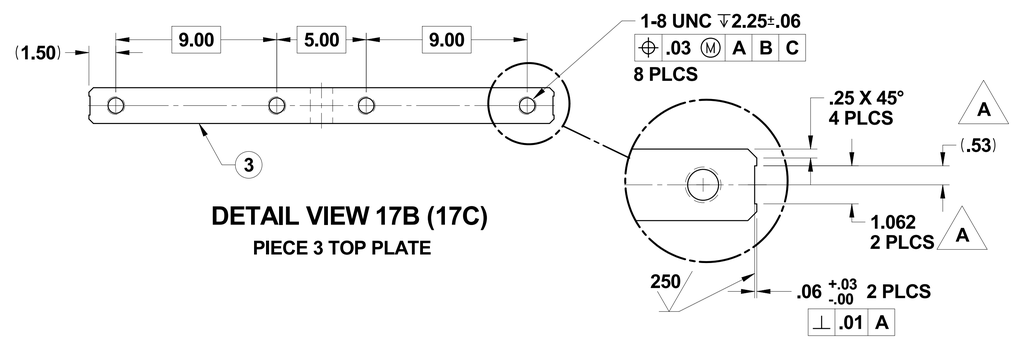

DETAIL VIEW 17B (17C)
PIECE 3 TOP PLATE

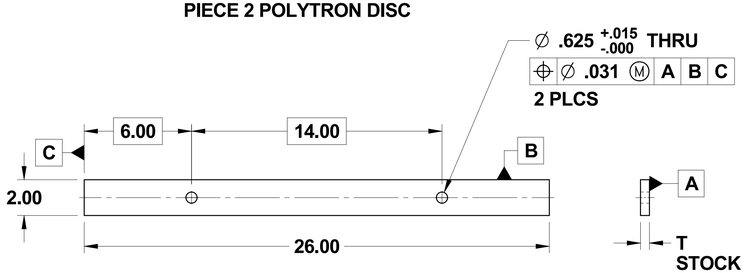

SHIM TABLE

PC #	T
4	0.12
5	0.25
6	0.50
7	1.00

DETAIL VIEW 20A (15A)
PIECES (4-7) SHIM PLATES

DETAIL VIEW 19A (20A)
PIECES (4-7) SHIM PLATES

PUGET SOUND NAVAL SHIPYARD
CODE 2370
ENGINEERING DIVISION

NO DEVIATIONS SHALL BE MADE
WITHOUT CODE 2370 APPROVAL

Unless otherwise specified, dimensions are in inches.

Decimals:

X.X = ±0.1
X.XX= ±0.06
X.XXX = ±0.005
X.XXXX = ±0.0005

Fractions = ±1/16
Angles = ±1/2°

Drawing dimensional and geometric tolerances per ASME Y14.5M-1994

DRAWING NO.	FSR	RF #
2370-1834		

TITLE
Bridge / Tower Connection

SCALE		REV.
AS SHOWN	Sheet 4 of 8	A

SHEET 4
REV. A
TITLE Bridge / Tower Connection
DWG. NO. 2370-1834

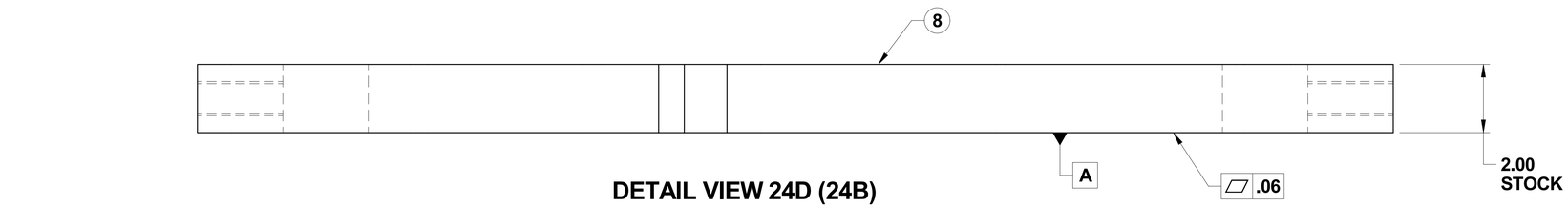

DETAIL VIEW 24D (24B)

PIECE 8 CLAMP JAW

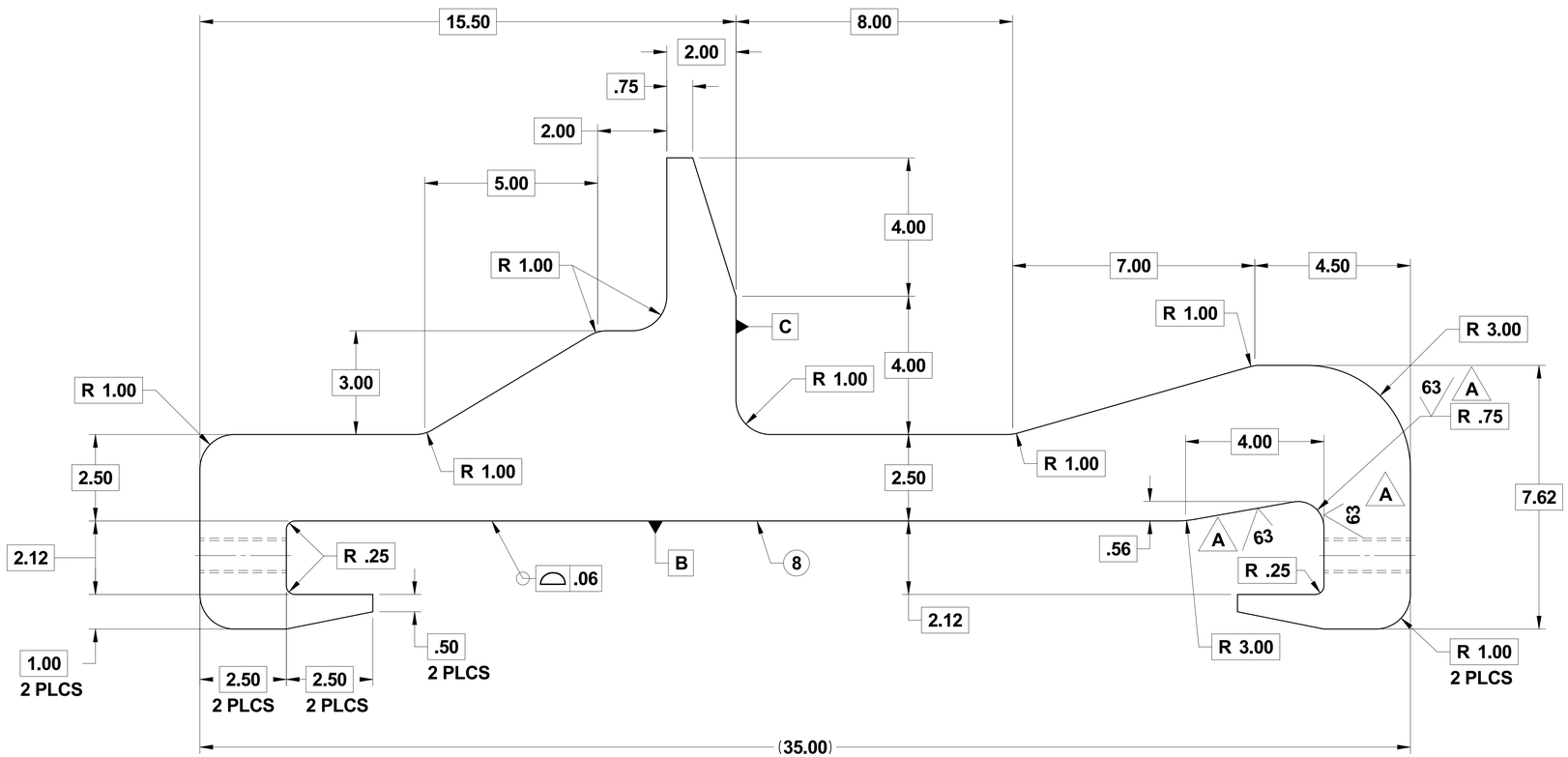

DETAIL VIEW 24B (15A)

PIECE 8 CLAMP JAW

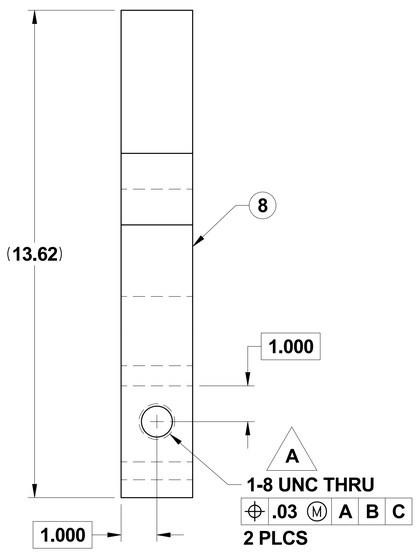

DETAIL VIEW 21B (24B)

PIECE 8 CLAMP JAW

PUGET SOUND NAVAL SHIPYARD

CODE 2370
ENGINEERING DIVISION

NO DEVIATIONS SHALL BE MADE
WITHOUT CODE 2370 APPROVAL

Unless otherwise specified, dimensions are in inches.

Decimals:

X.X = ±0.1
X.XX= ±0.06
X.XXX = ±0.005
X.XXXX = ±0.0005

Fractions = ±1/16
Angles = ±1/2°

Drawing dimensional and geometric tolerances per ASME Y14.5M-1994

DRAWING NO.	FSR	RF #
2370-1834		

TITLE
Bridge / Tower Connection

SCALE		REV.
AS SHOWN	**Sheet 5 of 8**	**A**

SHEET 5 | REV. A | TITLE Bridge / Tower Connection | DWG. NO. 2370-1834

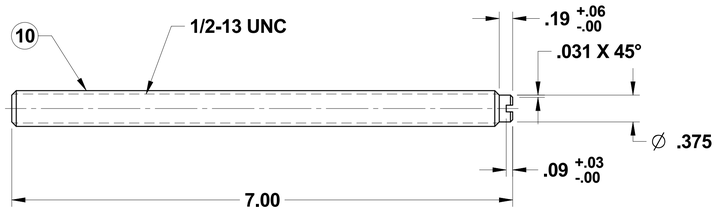

DETAIL VIEW 30D (15A)
PIECE 10 STUD

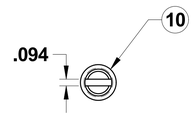

DETAIL VIEW 28D (30D)
PIECE 10 STUD

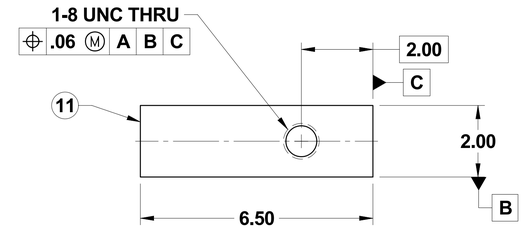

DETAIL VIEW 26D (15A)
PIECE 11 TAP BLOCK

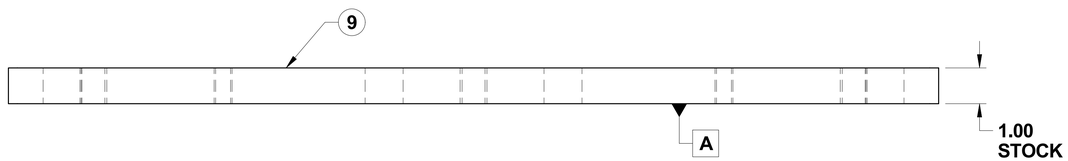

DETAIL VIEW 29C (29A)
PIECE 9 END PLATE

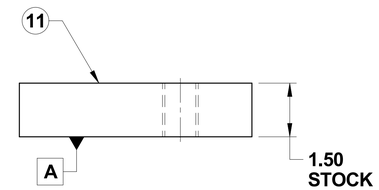

DETAIL VIEW 26C (26D)
PIECE 11 TAP BLOCK

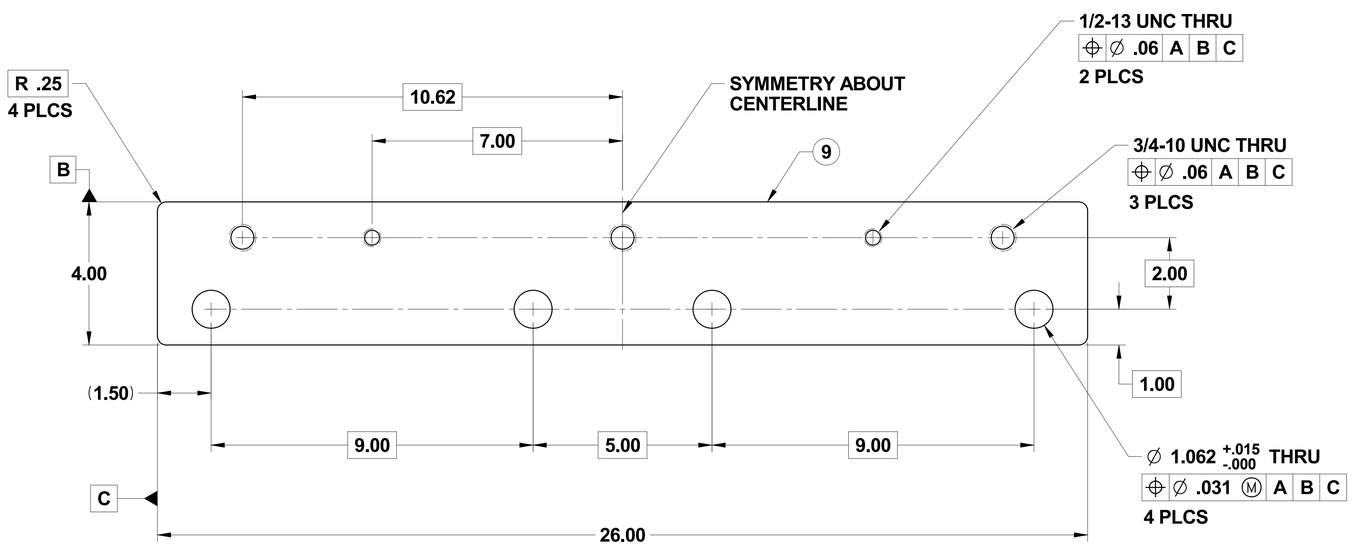

DETAIL VIEW 29A (15A)
PIECE 9 END PLATE

PUGET SOUND NAVAL SHIPYARD
CODE 2370
ENGINEERING DIVISION

NO DEVIATIONS SHALL BE MADE
WITHOUT CODE 2370 APPROVAL

Unless otherwise specified, dimensions are in inches.

Decimals:

X.X = ±0.1
X.XX= ±0.06
X.XXX = ±0.005
X.XXXX = ±0.0005

Fractions = ±1/16
Angles = ±1/2°

Drawing dimensional and geometric tolerances per ASME Y14.5M-1994

DRAWING NO.	FSR	RF #
2370-1834		

TITLE
Bridge / Tower Connection

SCALE		REV.
AS SHOWN	Sheet 6 of 8	A

SHEET 6
REV. A
TITLE Bridge / Tower Connection
DWG. NO. 2370-1834

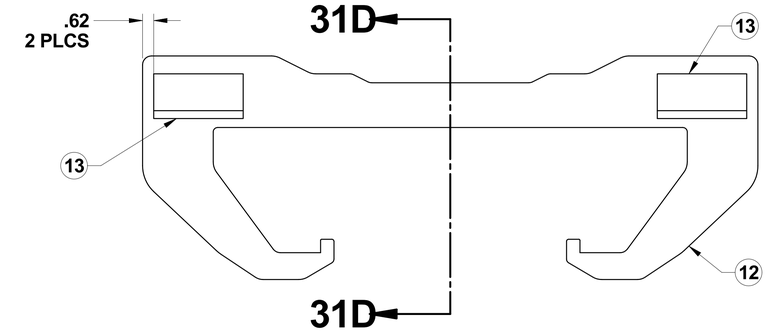

DETAIL VIEW 32D (15A)

VERTICAL RESTRAINT

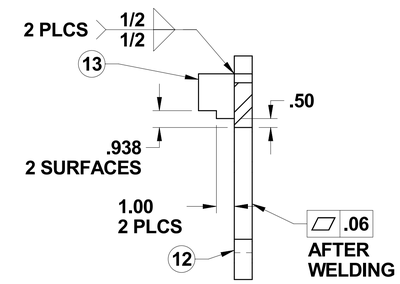

SECTION 31D-31D

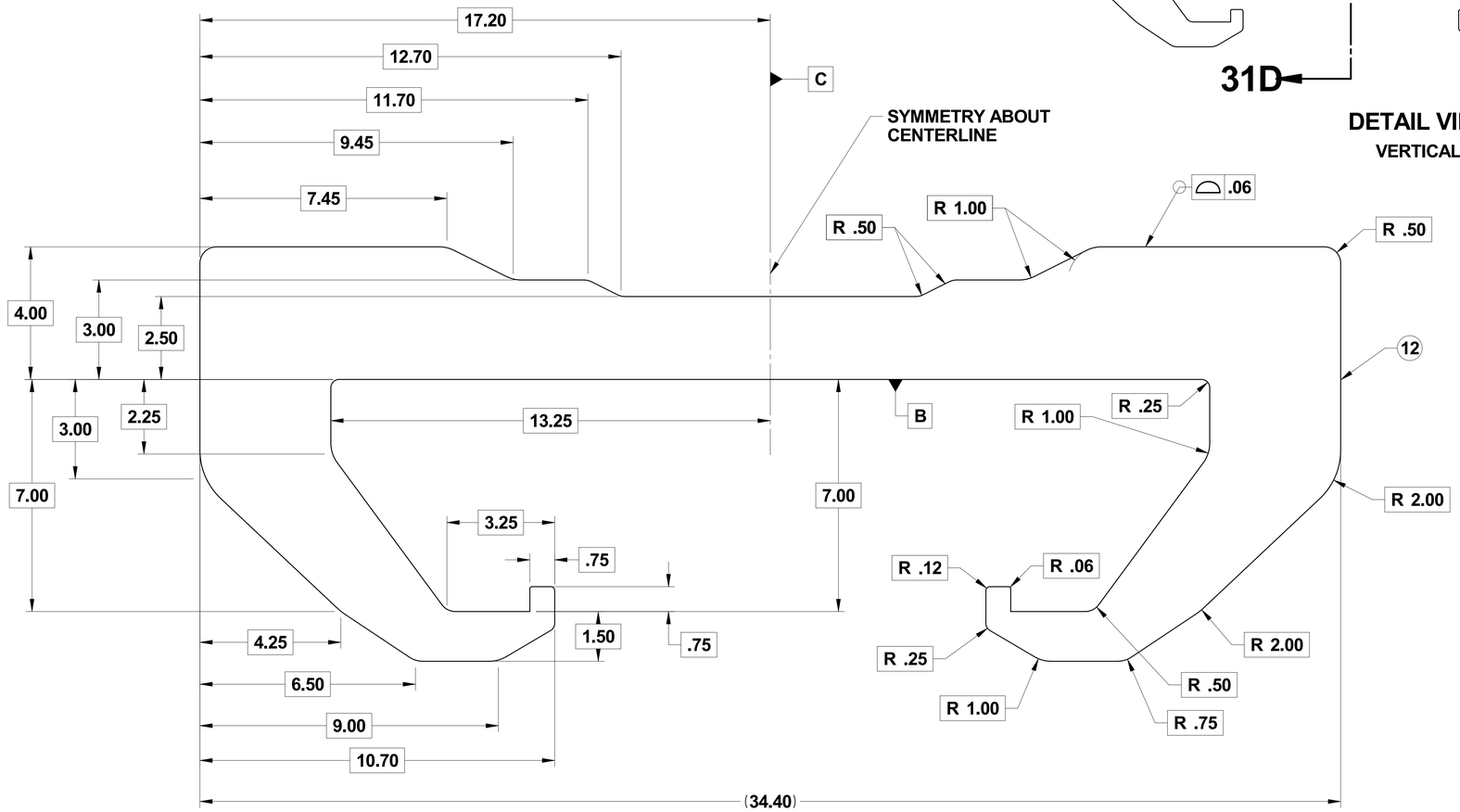

DETAIL VIEW 34B (32D)

PIECE 12 VERTICAL RESTRAINT PLATE

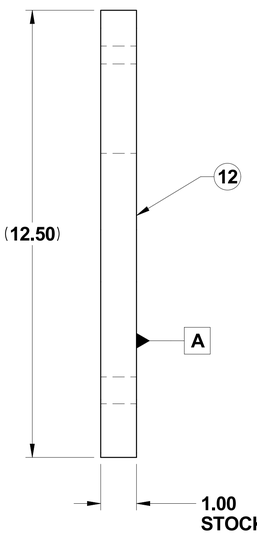

DETAIL VIEW 31B (34B)

PIECE 12 VERTICAL RESTRAINT PLATE

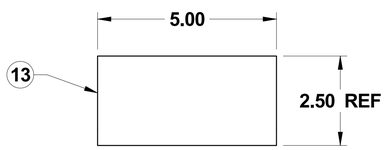

DETAIL VIEW 34A (32D)

PIECE 13 VERTICAL RESTRAINT BLOCK

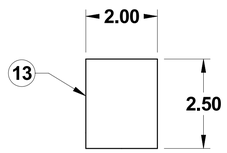

DETAIL VIEW 33A (34A)

PIECE 13 VERTICAL RESTRAINT BLOCK

PUGET SOUND NAVAL SHIPYARD
CODE 2370
ENGINEERING DIVISION

NO DEVIATIONS SHALL BE MADE
WITHOUT CODE 2370 APPROVAL

Unless otherwise specified, dimensions are in inches.

Decimals:

X.X = ±0.1
X.XX= ±0.06
X.XXX = ±0.005
X.XXXX = ±0.0005

Fractions = ±1/16
Angles = ±1/2°

Drawing dimensional and geometric tolerances per ASME Y14.5M-1994

DRAWING NO.	FSR	RF #
2370-1834		

TITLE
Bridge / Tower Connection

SCALE		REV.
AS SHOWN	Sheet 7 of 8	A

SHEET 7 | REV. A | TITLE Bridge / Tower Connection | DWG. NO. 2370-1834

BILL OF MATERIAL FOR BEARING 2						
PC#	QTY**	DESCRIPTION	MATERIAL	MATERIAL SPEC.	PANEL	REMARKS
1	1	BASEPLATE	STEEL	ASTM A36 OR A572 GR 50	20D	
2	1	POLYTRON DISC	POLYTRON	RJ WATSON SPEC	20B	Supplied by RJ Watson
18	8	FLAT WASHER FOR 1" BOLT	STEEL	ASTM F436, TYPE 1 GALVANIZED	-	
19	4	BOLT, 1-8 UNC x 3-1/2" LG	STEEL	ASTM A325, TYPE 1 GALVANIZED	-	SEE NOTE 1
20	4	HEX NUT, 1-8 UNC	STEEL	ASTM A563, TYPE 1 GALVANIZED	-	SEE NOTE 1
21	1	TOP PLATE	STEEL	ASTM A36 OR A572 GR 50	39A	

** Quantities listed in this table are for one complete "Bearing 2" assembly. See Sheet 3 for "Bearing 1" Bill of Material.

Note 1: Mixing high strength bolts and nuts that are galvanized by different processes may result in an unworkable assembly. Do not mix. Use only Type 1 galvanizing.

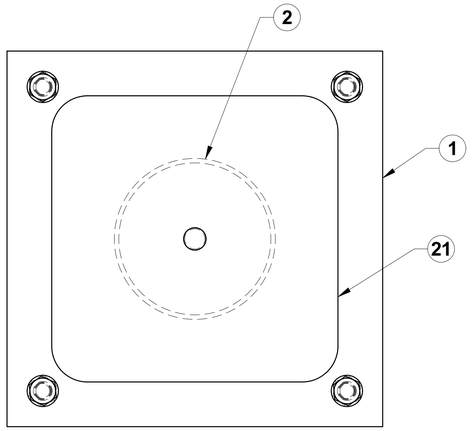

PLAN VIEW 40D (7C)

BEARING 2 ASSEMBLY

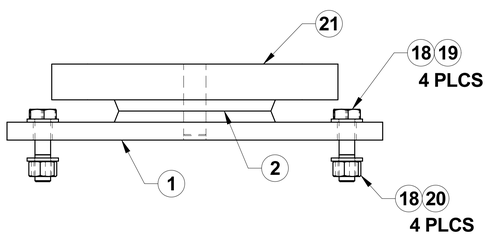

ELEVATION VIEW 40B (40D)

BEARING 2 ASSEMBLY

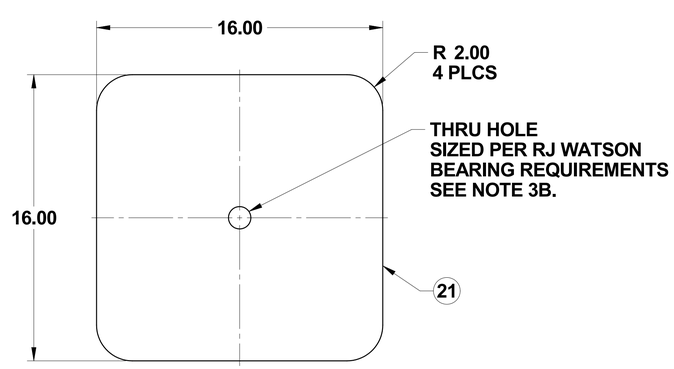

PLAN VIEW 39A (40D)

PIECE 21 TOP PLATE

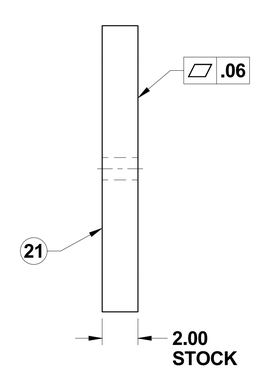

PLAN VIEW 37A (39A)

PIECE 21 TOP PLATE

PUGET SOUND NAVAL SHIPYARD

CODE 2370
ENGINEERING DIVISION

Unless otherwise specified, dimensions are in inches.

Decimals:

X.X = ±0.1
X.XX= ±0.06
X.XXX = ±0.005
X.XXXX = ±0.0005

Fractions = ±1/16
Angles = ±1/2°

Drawing dimensional and geometric tolerances per ASME Y14.5M-1994

NO DEVIATIONS SHALL BE MADE WITHOUT CODE 2370 APPROVAL

DRAWING NO.	FSR	RF #
2370-1834		

TITLE

Bridge / Tower Connection

SCALE		REV.
AS SHOWN	**Sheet 8 of 8**	**A**

SHEET 8 | REV. A | TITLE Bridge / Tower Connection | DWG. NO. 2370-1834

GENERAL NOTES AND SPECIFICATIONS

1. **APPLICATION:**

A. THIS DRAWING PROVIDES GENERAL NOTES AND SPECIFICATIONS TO BE USED WITH PSNS DWG 2370-1830, PSNS DWG 2370-1831, PSNS DWG 2370-1832, AND PSNS DWG 2370-1833. DWG 2370-1830 WILL BE USED FOR CONSTRUCTING THE DRY DOCK 1 BRIDGE. DWG 2370-1831 WILL BE USED FOR CONSTRUCTING THE DRY DOCK 5 BRIDGE. DWG 2370-1832 WILL BE USED FOR CONSTRUCTING THE DRY DOCK 1 SUPPORT TOWERS. DWG 2370-1833 WILL BE USED FOR CONSTRUCTING THE DRY DOCK 5 SUPPORT TOWERS.

2. **MANUFACTURING REQUIREMENTS**:

A. TOLERANCES:

1) UNLESS SPECIFIED OTHERWISE, ALL TOLERANCES SHALL BE +/- 1/16" FOR DIMENSIONS LESS THAN AND EQUAL TO 24" AND +/- 1/8" FOR DIMENSIONS OVER 24". ANGULAR TOLERANCES SHALL BE +/- 1 DEGREE. STRUCTURAL MATERIALS SUCH AS BEAMS, COLUMNS, ANGLES, PLATE, AND HSS SHALL MEET THE MILL DIMENSIONAL TOLERANCES SPECIFIED PER ASTM A6/A6M.

2) THE CORNER SUPPORT COLUMNS OF EACH TOWER SHALL BE ALIGNED SUCH THAT THE VARIATION IN STRAIGHTNESS MEASURED FROM THE BASE OF THE TOWER TO THE TOP OF THE TOWER IS LESS THAN 1/1000 OF THE AXIAL LENGTH (ABOUT 9/16" OVER THE ASSEMBLED COLUMN HEIGHT).

3) THE PRIMARY BRIDGE BEAMS (81 FT LONG BEAMS) SHALL MEET THE DIMENSIONAL REQUIREMENTS OF ASTM A6. WHEN ASSEMBLED, THE BRIDGE BEAMS SHALL BE PARALLEL WITH RESPECT TO EACH OTHER WITHIN +/- ¼" OVER THE ENTIRE LENGTH.

4) WHERE GALVANIZED BOLTS ARE TO BE USED, TAPPED HOLES SHALL BE THREADED SO THAT THE FIT IS THE SAME AS REQUIRED FOR GALVANIZED NUTS PER ASTM A563, PARAGRAPH 7.4.1. ENSURE THAT THREADED HOLES IN ANCHOR PLATES ARE PROPERLY THREADED/GROOMED, LUBRICATE BOLT WITH MOLYKOTE 37, OR EQUAL LUBRICANT, AND FULLY INSERT AND REMOVE LUBRICATED TEST BOLT INTO EACH THREADED HOLE. ENSURE EACH HOLE WILL ACCEPT THE HOT DIPPED GALVANIZED TEST BOLT WITHOUT BINDING OR UNEXPECTED RESISTANCE.

B. BREAK ALL SHARP EDGES TO A 1/32" CHAMFER (MINIMUM) AND REMOVE ALL WELD SPLATTER FROM EXPOSED SURFACES.

C. CORNERS MAY BE SNIPED TO CLEAR FILLETS OF PREVIOUSLY DEPOSITED WELDS AND EXISTING MATERIAL RADIUS. CLOSE THESE CHAMFERS BY WELDING WHERE POSSIBLE. ACCESS HOLES PROVIDED IN ENDS OF BEAMS TO FACILITATE WELDING NEED NOT BE FILLED.

D. SUBSTITUTIONS OF MATERIAL FOR STRUCTURAL SHAPES, BEAMS, COLUMNS, SHALL ONLY BE MADE WHEN AUTHORIZED BY PSNS ENGINEERING CODE 2370.24.

E. HANDRAIL AND STAIRWAY RAIL JOINT DESIGN IS CONTRACTOR OPTION. HOWEVER, STAIRWAY RAILS SHALL BE BUILT TO THE BASIC HEIGHT, LENGTH, AND MATERIAL REQUIREMENTS SPECIFIED. IF PIPE BENDING IS USED TO FORM CORNERS, THE MINIMUM BEND RADIUS SHALL BE ABOUT 6 INCHES ("3*D BEND"). ENSURE HANDRAILS ARE FREE OF SHARP EDGES AND/OR CORNERS THAT COULD INJURE PERSONNEL. HANDRAILS SHALL CONFORM WITH NPFA 101 AND/OR 29CFR1910.

3. **MATERIAL REQUIREMENTS:**

UNLESS OTHERWISE AUTHORIZED BY CODE 2370.24 ENGINEERING (PUGET SOUND NAVAL SHIPYARD), MATERIALS SHALL MEET OR EXCEED THE FOLLOWING SPECIFICATIONS.

A. **"W" SHAPED BEAMS AND COLUMNS;** ASTM A992. MINIMUM YIELD STRENGTH (Fy) = 50 KSI, ULTIMATE STRENGTH (Fu) = 65 KSI.

B. **HOLLOW STRUCTURAL SECTIONS (HSS) RECTANGULAR;** ASTM A500, GRADE "B". Fy = 46 KSI, Fu = 58 KSI.

C. **HOLLOW STRUCTURAL SECTIONS (HSS) ROUND;** ASTM A500, GRADE "B". Fy = 42 KSI, Fu = 58 KSI.

D. **STEEL PIPE;** ASTM A53, GRADE "B", Fy = 35 KSI, Fu = 60 KSI.

E. **ANGLES;** ASTM A36, Fy = 36 KSI, Fu = 58 KSI.

F. **CHANNELS;** ASTM A36, Fy = 36 KSI, Fu = 58 KSI.

G. **PLATES;** ASTM A36, Fy = 36 KSI, Fu = 58 KSI OR ASTM A572 GR 50, Fy = 50 KSI, Fu = 65 KSI. UNLESS NOTED OTHERWISE, STANDARD PL MATERIAL IS ASTM A36. USE OF ASTM A572 GR 42 OR GR 50 IS AN ACCEPTABLE ALTERNATE WHEN ASTM A36 PLATE MATERIAL IS SPECIFIED IN DRAWING. STEEL PLATES WHERE SPECIFIED SHALL BE HOT-DIPPED GALVANIZED AFTER FABRICATION AS PER ASTM A123.

H. **THREADED RODS;** ASTM A36 GR 36, Fy = 36 KSI, Fu = 58 KSI.

I. **CLEVIS ROD ENDS;** STEEL, 8 KIP MINIMUM CAPACITY, HOT DIP GALVANIZED OR ZINC PLATED

J. **HEAVY-HEX STRUCTURAL BOLTS;** ASTM A325 TYPE 1, GALVANIZED. GALVANIZING SHALL BE BY HOT-DIP IN ACCORDANCE WITH ASTM F2329. BOLTS AND CORRESPONDING NUTS SHALL BE GALVANIZED USING THE SAME GALVANIZING PROCESS AND BE PROVIDED AS AN ASSEMBLY.
CAUTION: *MIXING HIGH STRENGTH BOLTS THAT ARE GALVANIZED BY ONE PROCESS WITH NUTS THAT ARE GALVANIZED BY ANOTHER PROCESS MAY RESULT IN AN UNWORKABLE ASSEMBLY. DO NOT MIX. NUTS AND BOLTS MAY BE ORDERED LUBRICATED IF DESIRED.*

3. **MATERIAL REQUIREMENTS (CONTINUED).**

K. **STRUCTURAL NUTS;** ASTM A563 GRADE "DH", GALVANIZED. BOLTS AND CORRESPONDING NUTS SHALL BE GALVANIZED USING THE SAME GALVANIZING PROCESS AND BE PROVIDED AS AN ASSEMBLY.

L. **STRUCTURAL WASHERS;** ASTM F436 TYPE 1, HOT-DIPPED GALVANIZED.

M. **DIRECT TENSION INDICATING WASHERS;** SHALL BE PER ASTM F959 AND BE APPLICABLE TO THE FASTENER TYPE USED. FOR THIS SPECIFICATION, USE TYPE ASTM A325 DTI'S. DIRECT TENSION WASHERS SHALL BE GALVANIZED BY THE MECHANICAL DEPOSITION PROCESS IN ACCORDANCE WITH THE REQUIREMENTS OF CLASS 55 OF ASTM B695.

N. **GRATING;** GRATING SHALL BE WELDED STEEL BAR GRATING, BEARING BAR SIZE = 1 ¼" X 3/16", BEARING BAR SPACING = 4" X 1-3/16". GRATING FINISH SHALL BE GALVANIZED STEEL. McNICHOLS COMPANY GW-125, OR EQUAL. APPROX. WEIGHT = 9.2 LBS PER SQ. FT. GRATING SHALL BE 48" WIDE X LENGTH TO SUIT (12 FT AND 8FT LENGTH IN MOST CASES) SUCH THAT GRATING PANELS OVERLAP FLANGES OF BEAMS SUPPORTING GRATING BY 2" OR GREATER. CONTRACTOR SHALL SECURE BAR GRATING TO STRUCTURE USING SIZE AND LOCATION TO SUIT INTERMITTENT WELDS AS DETAILED IN THE DRAWINGS. FOR REMOVABLE SECTIONS OF GRATING INSTALL GRATING WITH GALVANIZED HARDWARE DESIGNED FOR USE WITH BAR GRATING, ENSURE HARDWARE IS INSTALLED IN A MANNER THAT WILL NOT CREATE TRIP HAZARDS TO PERSONNEL. CUT CRATING SHALL BE BANDED PER ANSI/NAAMM STANDARD MGB 531-09 METAL BAR GRATING MANUAL.

O. **STAIR TREADS;** STAIR TREADS SHALL BE GALVANIZED STEEL WITH WELDED RECTANGULAR BARS. McNICHOLS COMPANY TYPE "B" STANDARD OR EQUIVALENT, 10-15/16" TREAD WIDTH X 36" LONG WITH SERRATED SURFACE. MINIMUM BEARING BAR HEIGHT = 1", THICKNESS = 3/16", & SPACING = 1-3/16". TREAD NOSING SHALL BE CHECKERED PLATE STYLE.

P. **LADDERS;** LADDERS SHALL BE ALUMINUM CONSTRUCTION. LADDER RUNGS SHALL BE SOLID ROUND BAR WITH SLIP RESISTANCE PROVIDED BY THERMALLY APPLIED METAL SPRAY IN A GRIT FREE FINISH OF MEDIUM TO COARSE TEXTURE. SUGGESTED SOURCES FOR LADDER RUNGS INCLUDE SLIPNOT©, THERMION INCORPORATED, AND PRECISION COATINGS INCORPORATED. LADDERS SHALL COMPLY WITH OSHA 1910.27.

Q. **SELF-CLOSING SWING GATES;** SELF-CLOSING SWING GATES SHALL BE COMMERCIALLY AVAILABLE PAINTED CARBON STEEL, PAINTED SAFETY YELLOW, HOT-DIPPED GALVANIZED STEEL, OR STAINLESS STEEL CONSTRUCTION. GATE ASSEMBLY SHALL NOT BE CONSTRUCTED FROM FIBERGLASS OR PLASTIC. GATES SHALL COMPLY WITH OSHA 1910.23A. SUGGESTED SOURCE FOR ACCEPTABLE SELF-CLOSING SWING GATES IS THE GUARDDOG SERIES STEEL SWING GATES FROM BLUE WATER MANUFACTURING.

R. **TOWER LIFT LUG COMPONENTS:**

1) **SHAFT;** AISI 4140 COLD FINISHED, FY = 90 KSI.

2) **BASE PLATE;** ASTM A656 GR 80, FY = 80 KSI, OR MIL-S-16216, FY = 80 KSI.

3) **DOM SPACER TUBE;** ASTM A513, TYPE DOM, GRADE 1010/1020, FY = 50 KSI.

S. **FASTENERS / HARDWARE NOT SPECIFICALLY IDENTIFIED;** FOR ITEMS SUCH AS GRATING CLIPS, BOLTS, NUTS, AND WASHERS USED FOR SECURING NON-STRUCTURAL COMPONENTS, HINGES, HANDLES, ETC., ENSURE FASTENERS AND HARDWARE ARE CONSTRUCTED OF CORROSION RESISTANT MATERIALS SUITABLE FOR EXTERIOR APPLICATIONS.

T. **PIPE CAPS;** ANSI/ASME B16.3

U. **RUBBER GASKET MATERIAL;** MIL-R-900

V. **STAINLESS STEEL PLATE;** ASTM A240, TYPE 304, Fy = 30 KSI, Fu = 75 KSI

W. **BUSHING;** STAINLESS STEEL 304

X. **COTTER PIN;** ZINC PLATED

Y. **CLEVIS PIN;** ZINC PLATED

Z. **LOCKNUTS;** ZINC PLATED LOCKNUTS WITH NYLON INSERTS

AA. **ALUMINUM PLATE;** WHERE SPECIFIED SHALL BE: ASTM B209 GR 6061-T6, Fy = 35 KSI, Fu = 42 KSI

BB. **ALUMINUM PIPE;** WHERE SPECIFIED SHALL BE: ASTM B221 GR6061-T6, Fy = 35 KSI, Fu = 42 KSI

CC. **ALUMINUM LADDER RUNGS;** SlipNOT® OR EQUIVALENT

DD. **STUDS; ASTM A493 OR ASTM A276** STAINLESS STEEL STUDS. USE ALLOY GROUP 2 STAINLESS STEEL 316 OR 316L. USE STUD WELDING PROCEDURES OF AWS D1.6/D1.6M AS APPLICABLE.

GENERAL NOTES AND SPECIFICATIONS, CONT. NEXT SHEET

REFERENCES

1. **PSNS DWG 2370-1830**; DRY DOCK 1 RAE BRIDGE
2. **PSNS DWG 2370-1831**; DRY DOCK 5 RAE BRIDGE
3. **PSNS DWG 2370-1832**; DRY DOCK 1 RAE SUPPORT TOWERS
4. **PSNS DWG 2370-1833**; DRY DOCK 5 RAE SUPPORT TOWERS
5. **PSNS DWG 2370-1834**; RAE SUPPORT TOWERS / RAE BRIDGE BEARING CONNECTION

REVISIONS

SYMB	REV	DESCRIPTION	DATE	CHANGE BY	APPROVAL
A	A				
B	B				
C	C				
D	D				

DISTRIBUTION STATEMENT: N/A

A.D.C. REVIEW

	SIGNATURE	DATE
	/S/ J. BYRNES	11-7-14

CONCURRENCE

CODE	SIGNATURE	DATE

/S/ SIGNATURE ON FILE **APPROVAL**

	SIGNATURE	DATE
BRANCH SUPV.	/S/ J. BYRNES	11-7-14
CHECKED	/S/ M. SCHRODER	11-7-14
DRAWN	/S/ B. MEACHAM	11-7-14
DRAWN		
DESIGNED		
FILE PATH		

PUGET SOUND NAVAL SHIPYARD
CODE 2370
ENGINEERING DIVISION

NO DEVIATIONS SHALL BE MADE
WITHOUT CODE 2370 APPROVAL

DRAWING NO. **2370-1835**

TITLE **GENERAL NOTES AND SPECIFICATIONS**

SCALE NA | **Sheet 1 of 4** | REV. **ORIG**

SHEET 1 | REV. ORIG | TITLE GENERAL NOTES AND SPECIFICATIONS | DWG. NO. 2370-1835

GENERAL NOTES AND SPECIFICATIONS, CONT.

3. **MATERIAL REQUIREMENTS (CONTINUED).**

EE. BUCKLING RESTRAINED BRACES;

1) PART 1 – GENERAL

(1) CONTRACTOR PROVIDE ALL PARTS, MATERIALS AND LABOR REQUIRED FOR THE DETAILING, DELIVERY, TESTING AND ERECTION OF BUCKLING-RESTRAINED BRACES (BRBS), WHICH ARE DETAILED BY THE MANUFACTURER TO MEET STIFFNESS, YIELD STRENGTH, AND ELONGATION REQUIREMENTS AS SPECIFIED BY THE CONTRACT DOCUMENTS AND OTHER REQUIREMENTS SPECIFIED HEREIN.

(2) **RELATED DOCUMENTS:** GENERAL PROVISIONS OF THE CONTRACT SPECIFICATION AND RELATED DOCUMENTS DRAWINGS LISTED BELOW.

(a) PSNS & IMF DWG 2370-1832; DD1 RAE SUPPORT TOWERS

(b) PSNS & IMF DWG 2370-1833; DD5 RAE SUPPORT TOWERS

(3) **CODES AND STANDARDS:** STANDARDS LISTED BELOW APPLY WHERE DESIGNATION IS CITED IN THIS SECTION. WHERE THE APPLICABLE YEAR OF ADOPTION OR REVISION IS NOT LISTED BELOW, THE LATEST EDITION APPLIES.

(a) **AMERICAN INSTITUTE OF STEEL CONSTRUCTION (AISC)**

(i) AISC 303: CODE OF STANDARD PRACTICE FOR STEEL BUILDINGS AND BRIDGES (AISC 303-10)

(ii) AISC 341: SEISMIC PROVISIONS FOR STRUCTURAL STEEL BUILDINGS (ANSI/AISC 341-10)

(iii) AISC 360: MANUAL OF STEEL CONSTRUCTION (ANSI/AISC 360-10)

(b) **AMERICAN SOCIETY FOR TESTING & MATERIALS (ASTM)**

(i) ASTM A6/A6M: STANDARD SPECIFICATION FOR GENERAL REQUIREMENTS FOR ROLLED STRUCTURAL STEEL BARS, PLATES, SHAPES, AND SHEET PILING

(ii) ASTM A36: STANDARD SPECIFICATION FOR CARBON STRUCTURAL STEEL

(iii) ASTM A500/A500M: STANDARD SPECIFICATION FOR STANDARD SPECIFICATION FOR COLD-FORMED WELDED AND SEAMLESS CARBON STEEL STRUCTURAL TUBING IN ROUNDS AND SHAPES

(iv) ASTM A572: STANDARD SPECIFICATION FOR HIGH-STRENGTH LOW-ALLOY COLUMBIUM-VANADIUM STRUCTURAL STEEL

(c) **AMERICAN WELDING SOCIETY (AWS)**

(i) AWS D1.1/D1.1M: STRUCTURAL WELDING CODE – STEEL (2010)

(ii) AWS D1.8/D1.8M: STRUCTURAL WELDING CODE – SEISMIC SUPPLEMENT (2009)

(d) **NAVAL SEA SYSTEMS COMMAND (NAVSEA) AND/OR MILITARY SPECIFICATIONS (MIL)**

(i) MIL-PRF-23236(D): COATING SYSTEMS FOR SHIPS STRUCTURES

(ii) MIL-PRF-24635(E): COATING SYSTEMS, WEATHER RESISTANT EXTERIOR USE

(iii) MIL-PRF-24647(D): PAINT SYSTEM, ANTI-CORROSIVE AND ANTI-FOULING, SHIP HULL

(4) **DEFINITIONS**

(a) **BUCKLING-RESTRAINED BRACE (BRB):** A STEEL BRACE CONSISTING OF AN OUTER STEEL CASING, AN INNER STEEL CORE, AND A CONCRETE MATRIX BETWEEN THE CORE AND THE OUTER STEEL CASING. THE INNER STEEL CORE RESISTS AGAINST TENSILE AND COMPRESSIVE AXIAL LOADS AND IS RESTRAINED FROM BUCKLING BY THE GROUT/CONCRETE CONTAINED WITHIN THE OUTER STEEL CASING.

(5) **DOCUMENTATION DELIVERABLES:** THE FOLLOWING DOCUMENTS SHALL BE PROVIDED **TO PSNS CODE 2370.24 FOR REVIEW**.

(a) BUCKLING-RESTRAINED BRACE MANUFACTURER'S **QUALITY ASSURANCE PLAN (QAP)**. SUBMIT **PRIOR TO FABRICATION**. (SEE 6(C).)

(b) SUBMIT **PROPOSED ENGINEERING DETAILS** FOR BRBS **PRIOR TO FABRICATION** INCLUDING:

(i) **PRELIMINARY FABRICATION DRAWINGS**: SHOW SIZE AND CONFIGURATION OF STEEL CORE FOR FULL LENGTH OF BRB. INDICATE CASING SIZE, THICKNESS AND LENGTH. DRAWINGS SHALL CLEARLY DISPLAY ALL CONNECTION INFORMATION INCLUDING LOCATION OF BOLTS, BOLT TYPES, BOLT DIAMETERS, HOLE SIZE, AND FAYING SURFACE TYPES.

(ii) **CALCULATIONS**: PROVIDE CALCULATIONS SHOWING THE ADEQUACY OF PROPOSED BRB TO ACHIEVE PERFORMANCE REQUIREMENTS SPECIFIED HEREIN. THE BRB CALCULATIONS AND DETAILING SHALL CONFORM TO THE REQUIREMENTS OF ANSI/AISC 341-10 SECTION F4 AND AISC LOAD RESISTANCE FACTOR DESIGN (LRFD) CRITERIA.

(c) **FINAL BRB DETAILS**: ONCE ALL REVIEWS ARE COMPLETE, SUBMIT FINAL BRB SHOP DRAWINGS AND CALCULATIONS **PRIOR TO FABRICATION**.

(d) **ERECTION DRAWINGS**: SUBMIT ERECTION DRAWINGS **PRIOR TO FABRICATION**. SHOW LOCATION AND SIZE OF BRBS. PROVIDE COMPLETE INFORMATION NECESSARY FOR FABRICATION OF ELEMENTS OF STRUCTURAL STEEL FRAME TO RECEIVE BRACES, INCLUDING GUSSET PLATES, AND BEAM OR COLUMN WEB-STIFFENERS, AS APPLICABLE. SHOW METHODS OF ASSEMBLY, INCLUDING TYPE AND SIZE OF WELDS, PREPARATION AND FINISH OF FAYING SURFACES. IDENTIFY TOLERANCES FOR FABRICATION AND ERECTION.

(e) **CERTIFIED MATERIAL TEST REPORTS:** SUBMIT CERTIFIED TEST REPORTS **PRIOR TO SHIPPING** OF BRBS INCLUDING:

(i) TENSILE TESTS AND CHEMICAL ANALYSIS FOR ALL STEEL.

(ii) INDEPENDENT COUPON TESTS USED TO VERIFY CORE PLATE INITIAL YIELD STRESS, TENSILE STRESS, AND ULTIMATE ELONGATION.

1. WHERE CORE PLATES ARE FABRICATED FROM PLATE MATERIAL, COUPON TESTS SHALL BE PERFORMED ON EACH PLATE.

2. WHERE CORE PLATES ARE FABRICATED FROM BAR STOCK, COUPONS SHALL BE MADE AT INTERVALS OF EACH 5 TONS OF MATERIAL OF SAME HEAT AND THICKNESS.

3. COUPON TESTS TO BE TAKEN AT POINT OF MANUFACTURE OF BRB. MILL TEST REPORTS (MTR) MAY NOT BE USED.

(iii) CHARPY V-NOTCH TESTING: PLATES 2 INCHES (50MM) AND THICKER SHALL BE SUPPLIED WITH CHARPY V-NOTCH TESTING AS DESCRIBED IN PART 2 – PRODUCTS.

(iv) WELDING ELECTRODES: INCLUDE TENSILE, ELONGATION, AND CVN TOUGHNESS TESTS. IDENTIFY DIFFUSIBLE HYDROGEN.

(f) **QUALIFICATION TESTING REPORT:** SUBMIT BRB QUALIFICATION TESTING REPORT **PRIOR TO SHIPPING** OF BRBS. THE REPORT SHALL CONFORM TO REQUIREMENTS OF APPENDIX K3 OF ANSI/AISC 341-10. EXCEPTION: QUALIFICATION OF BRBS IN ACCORDANCE WITH APPENDIX T OF ANSI/AISC 341-05 IS CONSIDERED EQUIVALENT TO APPENDIX K3 OF ANSI/AISC 341 (2010) FOR BRBS PROCURED IN ACCORDANCE WITH THIS SPECIFICATION.

(g) **WELDING CERTIFICATES:** SUBMIT WELDING CERTIFICATES **PRIOR TO SHIPPING** OF BRBS INCLUDING:

(i) WELDER PERFORMANCE QUALIFICATION RECORDS (WPQR'S).

(ii) WELDING PROCEDURE SPECIFICATION (WPS) WRITTEN IN CONFORMANCE WITH AWS D1.1/D1.1M AND AWS D1.8/D1.8M, AS APPLICABLE, FOR EACH PROPOSED TYPE OF WELDED JOINT, WHETHER PRE-QUALIFIED OR QUALIFIED BY TESTING.

(h) **PAINTING CERTIFICATES**: **PRIOR TO SHIPPING** OF BRBS, PROVIDE DOCUMENTATION IDENTIFYING PAINTING SYSTEM(S) APPLIED TO BRBS AND DRY FILM THICKNESS (DFT) OF APPLIED COATINGS. SEE PART 2 – PRODUCTS FOR COATING PRODUCTS.

(6) **QUALITY ASSURANCE**

(a) **BRACE MANUFACTURER QUALIFICATIONS**:

(i) BRACE MANUFACTURER SHALL PARTICIPATE IN A RECOGNIZED QUALITY CERTIFICATION PROGRAM. CERTIFICATION SHALL INCLUDE DOCUMENTATION THAT THE MANUFACTURER'S QUALITY ASSURANCE PLAN IS IN COMPLIANCE WITH ANSI/AISC 360, ANSI/AISC 341, AND ANSI/AISC 303.

(ii) BRACE MANUFACTURER SHALL HAVE PREVIOUS EXPERIENCE MANUFACTURING, TESTING, AND QUALIFYING BRBS IN ACCORDANCE WITH ANSI/AISC 341 (2005 OR 2010).

(b) **BRB ENGINEER QUALIFICATIONS**: STRUCTURAL/PROFESSIONAL ENGINEER REPRESENTING BRB MANUFACTURER SHALL BE KNOWLEDGEABLE WITH THE RESULTS OF CYCLIC TESTING OF BRBS AND EXPERIENCED IN THE DETAILING OF BRBS BASED ON ENGINEERING ANALYSIS. ENGINEER SEALING FINAL BRB SHOP DRAWINGS, CALCULATIONS, AND CERTIFICATIONS SHALL BE A STRUCTURAL ENGINEER REGISTERED IN THE STATE OF WASHINGTON.

(c) **QUALITY ASSURANCE PLAN**: THE MANUFACTURER SHALL HAVE A DETAILED QUALITY ASSURANCE PLAN (QAP) TO EVIDENCE THAT THE BRBS ARE MANUFACTURED TO AISC STANDARDS. THE MANUFACTURING AND QUALITY CONTROL PROCEDURES SHOULD BE EQUIVALENT TO, OR BETTER THAN, THOSE USED TO MANUFACTURE BRACE TEST SPECIMENS. THE QUALITY ASSURANCE PLAN SHALL INCLUDE THE FOLLOWING ELEMENTS:

(i) INDICATE HOW THE PRODUCT IS TO BE IDENTIFIED, SUCH THAT IT CAN BE TRACED BACK TO PRODUCTION QUALITY ASSURANCE RECORDS.

(ii) INCLUDE A FLOW CHART OF THE PROCESS BY WHICH THE PRODUCT IS MANUFACTURED, INCLUDING DESCRIPTION OF PRODUCTION METHODS.

(iii) LIST TESTS FOR MATERIALS, INCLUDING THE APPLICABLE RECOGNIZED STANDARD FOR EACH TEST AND THE QUALIFICATIONS OF TESTING AGENCY AND/OR PERSONNEL.

(iv) IDENTIFY MANUFACTURING TOLERANCES FOR EACH PRODUCTION PROCESS.

(v) IN-PROCESS QUALITY CONTROL, INCLUDING ALL POINTS OF INTERNAL INSPECTION FOR CONTROL AND MONITORING OF THE FABRICATION AND ASSEMBLY PROCESS.

(vi) INCLUDE COPIES OF FORMS AND CHECKLISTS USED TO DOCUMENT INSPECTIONS.

(vii) INCLUDE REQUIRED QUALIFICATIONS OF PERSONNEL PERFORMING EACH INSPECTION.

(viii) IDENTIFY HOW INSPECTION REPORTS ARE REVIEWED AND APPROVED.

(ix) THE QUALITY ASSURANCE PLAN SHALL ALSO INCLUDE MANUFACTURER FURNISHED QUALITY ASSURANCE FOR ERECTION OF FURNISHED BRBS.

(d) **QUALIFICATION TESTING**: QUALIFICATION TESTING OF BRBS SHALL CONFORM TO PARAGRAPH 2.2.D OF PART 2 - PRODUCTS.

(e) **EXTRAPOLATION OF QUALIFICATION TESTING**: ALL DEVIATIONS FROM MATERIALS, DETAILS OF FABRICATION, AND QUALITY ASSURANCE CONTROLS USED FOR THE FABRICATION OF TESTED PROTOTYPE BRACES SHALL BE IDENTIFIED BY MANUFACTURER AND REVIEWED BY THE ENGINEER REPRESENTING THE BRB MANUFACTURER TO ENSURE THAT PRODUCTION BRACES MEET OR EXCEED THE LEVEL OF QUALITY USED IN FABRICATION OF PROTOTYPE BRACES.

2) PART 2 – PRODUCTS

(1) **ACCEPTABLE MANUFACTURERS:** BUCKLING-RESTRAINED BRACES SHALL BE MANUFACTURED AND SUPPLIED BY ONE OF THE FOLLOWING VENDORS, UNLESS OTHERWISE AUTHORIZED.

(a) COREBRACE, LLC
5789 WEST WELLS PARK ROAD
WEST JORDAN, UT 84081
(801) 280-0701

(b) STAR SEISMIC
6300 N SAGEWOOD DR (SUITE H #511)
PARK CITY, UT 84098
(435) 940-9222

(2) **DETAILING AND PERFORMANCE REQUIREMENTS**

(a) **DETAILING REQUIREMENTS**:

(i) A STRUCTURAL ENGINEER SHALL DETAIL THE BUCKLING-RESTRAINED BRACES TO MEET THE PERFORMANCE REQUIREMENTS. THE STRUCTURAL ENGINEER SHALL HAVE A THOROUGH KNOWLEDGE OF THE QUALIFYING CYCLICAL TESTS AND COMPETENTLY APPLY THE TEST RESULTS TO THE PROJECT CONDITIONS.

(ii) INTERPOLATION OF TEST RESULTS FOR DIFFERENT MEMBER SIZES SHALL BE JUSTIFIED BY RATIONAL ANALYSIS THAT DEMONSTRATES STRESS DISTRIBUTIONS AND MAGNITUDES OF INTERNAL STRAINS THAT ARE CONSISTENT WITH OR LESS SEVERE THAN THE TESTED ASSEMBLIES AND THAT CONSIDERS THE ADVERSE EFFECTS OF LARGER MATERIAL AND VARIATIONS IN MATERIAL PROPERTIES.

(iii) CONSIDER THE EFFECT OF IMPOSED END ROTATIONS.

(b) **PERFORMANCE CRITERIA:**

(i) INITIAL BRB YIELD FORCE OR AREA SHALL BE AS INDICATED, WITHIN THE TOLERANCES SPECIFIED ON THE CONTRACT DRAWINGS.

(ii) BRACES SHALL PROVIDE FOR STABLE CYCLIC DISPLACEMENT WITHIN THE RANGES REQUIRED PER ANSI/AISC 341.

(iii) THE PORTION OF THE STEEL CORE THAT PROJECTS BEYOND THE CASING SHALL PROVIDE FOR STABLE CYCLIC LOADING.

(iv) TENSION AND COMPRESSION SHALL BE RESISTED ENTIRELY BY THE STEEL CORE. THE BUCKLING RESTRAINING SYSTEM SHALL PREVENT BRACE BUCKLING AND CONTROL PLATE BUCKLING WITHOUT RESTRAINING THE STEEL CORE FROM TRANSVERSE EXPANSION AND LONGITUDINAL SHORTENING FOR DEFORMATIONS CORRESPONDING TO 2 TIMES THE REQUIRED INTERSTORY DRIFT.

(v) END CONNECTIONS AND CONNECTION CONFIGURATION, INCLUDING GUSSETS, MUST BE SIMILAR TO TESTED CONDITIONS.

(c) **COUPON TESTS**: PROVIDE COUPON TEST RESULTS FOR EACH LOT OF STEEL USED IN FABRICATION OF STEEL CORE AREAS SHOWING INITIAL YIELD, ULTIMATE TENSILE STRESS, AND ULTIMATE ELONGATION. COUPONS SHALL BE TAKEN FROM PLATES AT POINT OF BRACE MANUFACTURE AND SHALL BE USED AS THE BASIS FOR BRACE SIZING AND DETAILING.

(d) **QUALIFICATION TESTS**: THE SIZING AND DETAILING OF BRACES SHALL BE BASED ON RESULTS FROM QUALIFYING CYCLIC TESTS. TESTS SHALL CONSIST OF AT LEAST TWO SUCCESSFUL CYCLIC TESTS; ONE IS REQUIRED TO BE A TEST OF A BRACE SUBASSEMBLAGE THAT INCLUDES BRACE CONNECTION IMPOSED ROTATIONS AND THE OTHER MAY BE EITHER A UNIAXIAL OR SUBASSEMBLAGE TEST. QUALIFICATION TESTS SHALL CONFORM TO REQUIREMENTS OF THE ANSI/AISC 341-10, APPENDIX K3 (OR APPENDIX T OF ANSI/AISC 341-05).

(e) **MATERIALS:**

(i) **STEEL CORE AREAS**: ASTM A36/A36M; EXCEPT INITIAL YIELD STRESS SHALL BE 42 KSI WITH THE AVERAGES OF THE COUPON TESTS BETWEEN 38 AND 46 KSI, AS EVIDENCED BY COUPON TESTING OF PLATES TO BE INCORPORATED IN WORK.

(ii) **PLATES 2 INCHES AND THICKER** SHALL BE SUPPLIED WITH CHARPY V-NOTCH TESTING IN ACCORDANCE WITH ASTM A673, FREQUENCY P, OR APPROVED EQUAL. THE IMPACT TEST SHALL MEET A MINIMUM AVERAGE VALUE OF 20 FT-LBS ABSORBED ENERGY AT +70 DEGREES FAHRENHEIT, CONDUCTED IN ACCORDANCE WITH ANSI/AISC 360, OR APPROVED EQUAL.

(iii) **END PLATES/LUGS**: ASTM 572, GR 50 OR EQUIVALENT IN CONFORMANCE WITH BRB REQUIREMENTS SPECIFIED IN APPENDIX F4 OF ANSI/AISC 341-10.

(iv) **CASING**: ASTM A500, GRADE B.

(v) **DEBONDING AGENT**: MANUFACTURER'S STANDARD; DEMONSTRATED SUITABLE TO MAINTAIN SEPARATION OF STEEL CORE AND GROUT ENCASEMENT WHEN SUBJECTED TO A MINIMUM OF 30 CYCLES OF INELASTIC YIELDING AT 2.0 PERCENT STRAIN; RESISTANT TO AGING EFFECTS FOR A LIFE CYCLE OF 50 YEARS.

(vi) **FILL MATERIAL**: BRB MANUFACTURER'S STANDARD IN-FILL GROUT/MORTAR; DEMONSTRATED SUITABLE FOR FUNCTION AS A CONFINING IN-FILL MATERIAL BY UNIAXIAL OR SUBASSEMBLAGE QUALIFICATION TESTING.

(vii) **WELDING FILLER METAL:** FILLER METALS USED FOR SEISMIC FORCE RESISTING SYSTEM (SFRS) WELDS ARE TO BE MADE WITH FILLER METALS CLASSIFIED IN ACCORDANCE WITH AWS A5 STANDARDS THAT MEET OR EXCEED THE MECHANICAL PROPERTIES FOR YIELD STRENGTH TENSILE STRENGTH, CVN TOUGHNESS, AND ELONGATION REQUIREMENTS OF AWS D1.8/D1.8M CLAUSE 6.3.

(f) **PAINT**:

(i) PREPARE CARBON STEEL (FERROUS) SURFACES BY DRY ABRASIVE BLASTING TO NEAR WHITE METAL PER SSPC-SP-10 PRIOR TO PAINTING.

(ii) **PAINT/COATING SYSTEM:** THE PRIMER COAT SHALL BE ONE (1) COAT PPG AMERCOAT 235 EPOXY (OXIDE RED) MEETING MIL-PRF-23236(D), TYPE V, CLASS 7, GRADE B OR C. THE PRIMER COAT SHALL BE APPLIED TO A DRY FILM THICKNESS (DFT) OF 4 – 8 MILS. THE TOP COAT SHALL BE ONE (1) COAT PPG AMERCOAT PSX 700SG (HAZE GRAY) SINGLE PACK ACRYLIC POLYSILOXANE MEETING MIL-PRF-24635(E), TYPE V OR VI, CLASS 2, GRADES B OR C. TOP COAT SHALL BE APPLIED TO A DFT OF 5 – 8 MILS.

3) PART 3 – EXECUTION

(1) **FABRICATION:** FABRICATE BUCKLING-RESTRAINED BRACES IN ACCORDANCE WITH AISC 303 CODE OF STANDARD PRACTICE AND THE FOLLOWING:

(a) SPLICES IN THE STEEL CORE ARE NOT ACCEPTABLE.

(b) ROUGHNESS: AFTER CUTTING, EDGES OF CORE PLATES SHALL HAVE ROUGHNESS LESS THAN 1000 MICRO-INCHES IN THE YIELDING LENGTH REGION.

(c) GOUGES AND NOTCHES:

(i) OCCASIONAL GOUGES AND NOTCHES LESS THAN 1/8 INCH DEEP IN EDGES OF CORE PLATES MAY BE REPAIRED BY GRINDING TO A SMOOTH TRANSITION. THE LENGTH OF TRANSITION SHALL BE A MINIMUM OF 10 TIMES THE DEPTH OF GOUGE.

(ii) NOTCHES AND GOUGES IN THE YIELD LENGTH REGION GREATER THAN 1/8 INCH AND LESS THAN OR EQUAL TO 3/8 INCH MAY BE REPAIRED IN ACCORDANCE WITH THE COMPANY'S QUALITY ASSURANCE MANUAL. THE AREA SHALL BE INSPECTED BY NON-DESTRUCTIVE TESTING PROCEDURES (MT OR UT) IN CONFORMANCE WITH AWS D1.1/D1.1M AFTER GRINDING TO ENSURE THE ENTIRE DEPTH OF NOTCH OR GOUGE HAS BEEN REMOVED. NOTCHES OR GOUGES IN THE YIELD LENGTH REGION GREATER THAN 3/8 INCH IN THE YIELD LENGTH SHALL BE REJECTED.

(d) THE MAXIMUM DIMENSIONS OF THE CASING OF THE BUCKLING-RESTRAINED BRACE SHALL BE AS INDICATED ON THE CONTRACT DOCUMENTS.

(e) ASSEMBLY: ASSEMBLE COMPONENTS OF THE BUCKLING-RESTRAINED BRACE IN A MANNER TO ENSURE PROPER PERFORMANCE OF THE BRACE.

(f) EXAMINE STEEL CORE AREAS FOR STRAIGHTNESS PRIOR TO COATING WITH DEBONDING AGENT OR IN-FILLING WITH MANUFACTURER'S GROUT.

(g) PROVIDE END-CONFINING PLATES TO ENSURE CONFINEMENT OF THE FILL MATERIAL WHILE ALLOWING FOR NON-RESTRICTING MOVEMENT OF THE STEEL CORE.

(h) INTERIOR OF BRACE SHALL BE SEALED OR OTHERWISE PROTECTED FROM MOISTURE/CORROSIVE ELEMENT INFILTRATION INTO THE INTERIOR CORE REGION.

(2) **ERECTION**

(a) MANUFACTURER COORDINATE WITH CONTRACTOR PERFORMING ERECTION WORK TO VERIFY PROPER BRB DIMENSIONS.

(b) ALLOW FOR ERECTION LOADS AND FOR SUFFICIENT TEMPORARY BRACING TO MAINTAIN STRUCTURE SAFE, PLUMB, AND IN TRUE ALIGNMENT UNTIL COMPLETION OF ERECTION AND INSTALLATION OF BUCKLING-RESTRAINED BRACES.

(c) NO FIELD WELDING TO BRBS IS ALLOWED, INCLUDING NON-STRUCTURAL PIECES UNLESS APPROVED BY BRB MANUFACTURER AND EOR.

(d) NO FIELD CUTTING OR ALTERING IS PERMITTED WITHOUT THE APPROVAL OF THE MANUFACTURER AND EOR.

GENERAL NOTES AND SPECIFICATIONS, CONT. NEXT SHEET

GENERAL NOTES AND SPECIFICATIONS; CONTINUED

4. WELDING REQUIREMENTS.

A. WELDING PERFORMED BY CONTRACTOR SHALL COMPLY WITH WELDING PROCEDURE AND PERFORMANCE QUALIFICATIONS OF ANSI/AWS D1.1 (FOR STEEL), ANSI/AWS D1.6 (FOR STAINLESS STEEL), AND ANSI/AWS D1.2 (FOR ALUMINUM). MINIMUM WELD ELECTRODE MATERIAL FOR STRUCTURAL STEEL WELDING SHALL BE FE70XX.

1) ADDITIONALLY, ANY WELDING ASSOCIATED WITH THE SFRS SHALL CONFORM TO THE SEISMIC PROVISIONS OF AWS D1.8. AWS D1.8 SUPPLEMENTS AWS D1.1 AND DOES NOT REPLACE AWS D1.1. EXCEPT AS MODIFIED BY AWS D1.8, ALL OF AWS D1.1 STILL APPLIES WHEN AWS D1.8 IS SPECIFIED.

2) THE STRUCTURES ASSOCIATED WITH THIS DOCUMENT EMPLOY DEMAND CRITICAL WELDS AND PROTECTED ZONES WITH SPECIFIC REQUIREMENTS. UNLESS OTHERWISE SPECIFIED, STRUCTURAL WELDS MAY BE GENERALLY CLASSIFIED AS FOLLOWS:

(1) **WELDS NOT PART OF SFRS:** WELDS NOT INCLUDED IN THE SFRS ARE GOVERNED BY AWS D1.1 AND NO SPECIAL SEISMIC CONSIDERATIONS APPLY.

(2) **SFRS NOT DEMAND CRITICAL:** WELDS ON THE SFRS, BUT NOT DEMAND CRITICAL, ARE GOVERNED BY AWS D1.8, BUT THE ADDITIONAL PROVISIONS FOR DEMAND CRITICAL WELDS DO NOT APPLY.

(3) **SFRS DEMAND CRITICAL:** WELDS IN THE RELATED DOCUMENTS STRUCTURAL DRAWINGS DESIGNATED AS SFRS DEMAND CRITICAL WELDS ARE SUBJECT TO ALL THE APPLICABLE REQUIREMENTS OF AWS D1.8, AS WELLS AS THOSE ADDITIONAL PROVISIONS THAT APPLY TO DEMAND CRITICAL WELDS.

B. PROTECTED ZONE REQUIREMENTS:

1) NO UNAUTHORIZED WELDS OR ATTACHMENTS ARE PERMITTED IN THE PROTECTED ZONE WITHOUT APPROVAL OF THE EOR. WELDS SHOWN IN ASSOCIATED STRUCTURAL DRAWINGS ASSOCIATED WITH THIS DRAWING ARE CONSIDERED "AUTHORIZED" BY THE EOR. IF ERECTION AIDS ARE REQUIRED TO BE ATTACHED WITHIN THE PROTECTED ZONE, THE CONTRACTOR SHALL OBTAIN THE APPROVAL OF THE EOR FOR USE OF SUCH ATTACHMENTS.

2) NO NOTCHES OR GOUGES OTHER THAN THOSE SHOWN IN THE DRAWINGS ASSOCIATED WITH THIS DRAWING ARE PERMITTED IN THE PROTECTED ZONE WITHOUT APPROVAL OF THE EOR.

3) ANY REPAIRS IN THE PROTECTED ZONE SHALL BE INSPECTED FOLLOWING REPAIR WORK AS NECESSARY.

C. ALL SHOP AND FIELD WELDERS SHALL BE CERTIFIED ACCORDING TO AWS PROCEDURES FOR THE WELDING PROCESS AND WELDING POSITION USED.

D. WELD SYMBOLS SHOWN ARE IN ACCORDANCE WITH ANSI/AWS D2.4.

E. BUILT-UP SECTIONS AND WELDMENTS ASSEMBLED BY WELDING SHALL BE FREE OF WARPAGE AND ALL AXES SHALL HAVE TRUE ALIGNMENT.

F. THE TOUGHNESS AND NOTCH SENSITIVITY OF THE STEEL SHALL BE CONSIDERED IN THE FORMATION OF ALL WELDING PROCEDURES TO PREVENT BRITTLE AND PREMATURE FRACTURE DURING FABRICATION AND ERECTION.

G. BEFORE WELDING, PARTICULAR ATTENTION SHALL BE PAID TO SURFACE PREPARATION, FIT UP AND CLEANLINESS OF SURFACES TO BE WELDED.

H. MINIMUM PREHEAT AND INTER-PASS TEMPERATURES FOR STRUCTURAL STEEL WELDING SHALL BE AS SPECIFIED IN ANSI/AWS D1.1, EXCEPT THAT NO WELDING SHALL BE PERFORMED WHEN THE AMBIENT TEMPERATURE IS LOWER THAN 0 DEGREES FAHRENHEIT. THE TEMPERATURE SHALL BE MEASURED FROM THE SIDE OPPOSITE THAT UPON WHICH THE PREHEAT IS APPLIED.

I. THE HEAT, INPUT, LENGTH OF WELD AND SEQUENCE OF WELD SHALL BE CONTROLLED TO PREVENT DISTORTIONS. THE SURFACES TO BE WELDED AND THE FILLER METALS TO BE USED SHALL BE SUBJECT TO INSPECTION BEFORE ANY WELDING IS PERFORMED.

J. WELDS SHALL BE SOUND THROUGHOUT. THERE SHALL BE NO CRACK IN ANY WELD OR WELD PASS. WELDS SHALL BE CONSIDERED SOUND IF THEY CONFORM TO AWS REQUIREMENTS.

K. WELDS SHALL BE FREE FROM OVERLAP.

L. CRATERS SHALL BE FILLED TO THE FULL CROSS SECTION OF THE WELDS.

M. FABRICATOR AND ERECTOR SHALL COORDINATE WELDING RESPONSIBILITY AT ALL WELDED JOINTS.

N. VISUALLY INSPECT ALL WELDS IN ACCORDANCE WITH ANSI/AWS D1.1 (FOR STEEL), ANSI/AWS D1.6 (FOR STAINLESS STEEL), AND ANSI/AWS D1.2 (FOR ALUMINUM) WITH THE FOLLOWING EXCEPTION. NO UNDERSIZED WELDS OR POROSITY GREATER THAN 1/8" IS ALLOWED.

O. CAP AND SEAL WELD HOLES IN PIPES AND HSS SECTIONS WITH SIZE TO SUIT SIMILAR MATERIAL TO MINIMIMIZE CORROSION OF INACCESSIBLE SURFACES. THIS REQUIREMENT APPLIES TO JOINTS SUCH AS EXPOSED ENDS OF HANDRAILS, PIPES, HSS BRACES AND STANCHIONS, AND AREAS WHERE INFILTRATION OF WATER/MOISTURE COULD RESULT IN CORROSION OF INACCESSIBLE SURFACES.

P. SPLICING OF HANDRAIL PIPES, STANCHIONS, AND KICK-PLATES USING FULL PENETRATION WELDS PER AWS D1.1 IS AUTHORIZED. DO NOT SPLICE BEAMS OR COLUMN MEMBERS UNLESS SPECIFICALLY AUTHORIZED BY PSNS CODE 2370.24 ENGINEERING.

Q. WELD SIZES SHOWN ARE THE MINIMUM ACCEPTABLE SIZES.

R. WELDS SHALL BE SEQUENCED TO MINIMIZE DISTORTION. WHERE DISTORTION DOES OCCUR, STRAIGHTENING PER ANSI/AWS D1.1 (FOR STEEL), ANSI/AWS D1.6 (FOR STAINLESS STEEL), AND ANSI/AWS D1.2/D1.2M (FOR ALUMINUM) SHALL BE PERFORMED TO ACHIEVE TOLERANCES OF THE DRAWING.

5. SURFACE FINISH REQUIREMENTS:

A. UNLESS SPECIFIED OTHERWISE, ANY MACHINED SURFACES SHALL HAVE SURFACE ROUGHNESS 125√ OR BETTER.

6. PAINTING REQUIREMENTS AND APPLICATION METHODS:

A. GENERAL: THIS GENERAL NOTE APPLIES TO PAINTING PROCEDURES FOR CARBON STEEL (FERROUS) SURFACES. FASTENERS, STAINLESS STEEL SURFACES, AND GALVANIZED GRATING SHALL NOT BE PAINTED PER GENERAL NOTE 6.C. AS A MINIMUM, ALL BOLTED STRUCTURAL JOINTS THAT HAVE INACCESSIBLE SURFACES FOLLOWING ASSEMBLY OF JOINT SHALL HAVE A COAT OF PPG AMERCOAT 235 EPOXY (OXIDE RED) APPLIED TO A DRY FILM THICKNESS (DFT) OF 4 MILS ON THE INACCESSIBLE PORTIONS OF THE JOINT PRIOR TO ASSEMBLY OF JOINT.

B. PREPARATION, APPLICATION, & INSPECTION OF PAINT: PREPARE CARBON STEEL (FERROUS) SURFACES BY DRY ABRASIVE BLASTING TO NEAR WHITE METAL PER SSPC-SP 10 PRIOR TO PAINTING. THIS NOTE DOES NOT APPLY TO SURFACES WITH EXISTING GALVANIZED SURFACES (I.E. GRATING AND STAIR TREADS) OR SURFACES THAT ARE STAINLESS STEEL.

C. PAINT/COATING SYSTEM: THE PRIMER COAT SHALL BE ONE (1) COAT PPG AMERCOAT 235 EPOXY (OXIDE RED) MEETING MIL-PRF-23236(D), TYPE V, CLASS 7, GRADE B OR C. THE PRIMER OAT SHALL BE APPLIED TO A DRY FILM THICKNESS (DFT) OF 4 – 8 MILS. THE TOP COAT SHALL BE ONE (1) COAT PPG AMERCOAT PSX 700SG (HAZE GRAY) SINGLE PACK ACRYLIC POLYSILOXANE MEETING MIL-PRF-24635(E), TYPE V OR VI, CLASS 2, GRADES B OR C. TOP COAT SHALL BE APPLIED TO A DFT OF 5 – 8 MILS. ***DO NOT PAINT STAINLESS STEEL SURFACES***.

D. TOUCH-UP PAINTING: ANY SURFACES THAT REQUIRE TOUCH-UP PAINTING FOLLOWING INITIAL PAINTING OF STRUCTURAL STEEL (E.G. TOUCH-UP AFTER DRILLING NEW HOLES, MODIFICATION OF EXISTING HOLES, TOUCH-UP OF WELDED JOINTS & MT'D SURFACES, ETC.), SHALL BE TOUCHED UP AS FOLLOWS. CLEAN SURFACE OF ANY WATER, DIRT, OIL, & RUST SCALE. APPLY PPG AMERCOAT 235 TO TOUCH-UP PAINT TO AFFECTED AREA TO A MINIMUM DFT OF 4 MILS. APPLY A TOPCOAT OF AMERON PSX 700SG (HAZE GRAY) TO TOUCH-UP AREA TO A MINIMUM DFT OF 5 MILS. SURFACES THAT ARE INACCESSIBLE FOLLOWING BOLTING SHALL BE COATED AS DESCRIBED IN GENERAL NOTE 6.A (AS A MINIMUM).

E. TOUCH-UP PAINTING (GALVANIZED SURFACES): TOUCH-UP GALVANIZED SURFACES AFFECTED BY CUTTING, DRILLING, GRINDING, AND SIMILAR PROCESSES USING ZINC RICH PAINT PER ASTM A780/A780M.

7. ASSEMBLY OF BOLTED JOINTS:

A. UNLESS OTHERWISE SPECIFICED, ASSEMBLY OF BOLTED JOINTS SHALL BE IN ACCORDANCE WITH THE RESEARCH COUNCIL ON STRUCTURAL CONNECTIONS SPECIFICATION (RCSC). THE REQUIREMENTS OF THE RCSC SPECIFICIFICATION ARE INCLUDED IN THE AISC LRFD MANUAL OF STEEL CONSTRUCTION.

B. ENSURE JOINT SURFACES THAT WILL BECOME INACCESSIBLE UPON ASSEMBLY OF BOLTED JOINT ARE COATED PER PAINTING SECTION 6 PRIOR TO ASSEMBLY OF JOINT.

C. JOINTS THAT DO NOT SPECIFY THE USE OF DIRECT TENSION INDICATING WASHERS (DTI'S) MAY BE ASSEMBLED "SNUG TIGHT". SNUG TIGHT CONDITION IS DEFINED AS THE TIGHTNESS ATTAINED BY EITHER A FEW IMPACTS OF AN IMPACT WRENCH OR THE FULL EFFORT OF A WORKER WITH AN ORDINARY SPUD WRENCH THAT BRINGS THE CONNECTED PLYS INTO FIRM CONTACT.

D. BOLTED FASTENERS CAN BE ORIENTED IN JOINTS AS SHOWN IN DWG 2370-1830 , DWG 2370-1831, DWG 2370-1832, AND DWG 2370-1833, OR MAY BE TURNED 180 DEGREES FROM SHOWN TO FACILITATE ASSEMBLY OF BOLTED JOINTS.

8. WEIGH BRIDGE ASSEMBLY OF DWG 2370-1830 AND DWG 2370-1831

A. PRIOR TO LOAD TESTING AND NDT OF LIFT PADS AS SPECIFIED IN DWG 2370-1830 AND DWG 2370-1831, LIFT AND WEIGH BRIDGE ASSEMBLY TO +/- 2% ACCURACY.

B. PROVIDE WRITTEN DOCUMENTATION OF WEIGHT OBSERVED FOR BRIDGE ASSEMBLY TO PSNS PRIOR TO DELIVERY OF MODULES.

C. PAINT BRIDGE WEIGHT AND RELATED INFORMATION SHOWN BELOW IN AT LEAST 2 PLACES ON BRIDGE IN A VISIBLE LOCATION NEAR LIFT PAD LOCATIONS. USE 2" MINIMUM SIZE BLACK LETTERS. USE OF VINYL LETTERS IS CONSIDERED AN ACCEPTABLE OPTION FOR PAINTED LETTERS. AS SECOND OPTION, USE OF SIGNS MADE FROM ALUMINUM OR STAINLESS STEEL AFFIXED TO STRUCTURE WITH 3M DOUBLE-BACK TRIM TAPE IS ACCEPTABLE.

TOWER BRIDGE ASSEMBLY
DWG 2370-183X (ENTER APPLICABLE DRAWING NUMBER)
WEIGHT: (ENTER WEIGHT OBSERVED)
MFR: (ENTER NAME OF MANUFACTURER)
YEAR: (ENTER YEAR BUILT)

D. THE CALCULATED WEIGHT ESTIMATES FOR THE BRIDGE ASSEMBLIES ARE AS FOLLOWS:

1) DD1 BRIDGE: 75,500 LBS

2) DD5 BRIDGE: 69,000 LBS

9. WEIGH TOWER STRUCTURES OF DWG 2370-1832 AND DWG 2370-1833

A. PRIOR TO LOAD TESTING OF LIFTING LUGS PER DWG 2370-1832 AND DWG 2370-1833, LIFT AND WEIGH EACH TOWER TO +/- 2% ACCURACY.

B. PROVIDE WRITTEN DOCUMENTATION OF WEIGHT OBSERVED FOR EACH TOWER TO PSNS PRIOR TO DELIVERY OF TOWER.

C. PAINT MODULE AND WEIGHT INFORMATION ON EACH MODULE IN VISIBLE LOCATIONS IN AT LEAST TWO LOCATIONS NEAR THE LIFTING LUGS USING 2" MINIMUM SIZE BLACK LETTERS. USE OF VINYL LETTERS IS CONSIDERED AN ACCEPTABLE OPTION FOR PAINTED LETTERS. AS A SECOND OPTION, USE OF SIGNS MADE FROM ALUMINUM OR STAINLESS STEEL AFFIXED TO STRUCTURE WITH 3M DOUBLE-BACK TRIM TAPE IS ACCEPTABLE.

TOWER #: (DD1A, DD1B, ETC.)
DWG 2370-183X (ENTER APPLICABLE DRAWING NUMBER)
WEIGHT: (ENTER WEIGHT OBSERVED)
MFR: (ENTER CONTRACTOR NAME)
YEAR: (ENTER YEAR BUILT)

D. THE CALCULATED WEIGHT ESTIMATES FOR THE TOWERS ARE AS FOLLOWS:

1) DD1 TOWER: 64,500 LBS

2) DD5 TOWER: 65,000 LBS

10. SHIPPING REQUIREMENTS

A. CONTRACTOR SHALL CONSTRUCT THE BRIDGE AND TOWER ASSEMBLIES OFFSITE.

B. CONTRACTOR SHALL PROVIDE A SHIPPING AND OFFLOADING PLAN TO PSNS ENGINEERING CODE 2370.24 A MINIMUM OF 30 DAYS **PRIOR TO SHIPPING** FOR APPROVAL.

C. CONTRACTOR IS RESPONSIBLE FOR THE STABILITY OF THE BRIDGE AND TOWERS UNTIL THE ITEMS ARE LANDED IN AN UPRIGHT POSITION ON SOLID GROUND AT PSNS & IMF.

D. IF THE TOWERS ARE TO BE SHIPPED LAYING DOWN, A LICENSED STRUCTURAL ENGINEER MUST PROVIDE A PLAN TO LAY DOWN AND UPRIGHT THE TOWERS TO PSNS ENGINEERING CODE 2370.24 A MINIMUM OF 30 DAYS **PRIOR TO SHIPPING** FOR APPROVAL.

11. QUALITY CONTROL (QC) AND QUALITY ASSURANCE (QA):

A. UNLESS OTHERWISE SPECIFIED, QUALITY CONTROL (QC) AND QUALITY ASSURANCE (QA) SHALL BE IN ACCORDANCE WITH CHAPTER J REQUIREMENTS OF ANSI/AISC 341 FOR FABRICATION, ERECTION, AND COATINGS ASSOCIATED WITH STRUCTURAL STEEL FRAMING DESIGNATED AS THE SEISMIC FORCE RESISTING SYSTEM (SFRS) IN THE RELATED DOCUMENTS STRUCTURAL DRAWINGS. THE SEISMIC PROVISIONS OF ANSI/AISC 341 ARE IN ADDITION TO THE QC AND THE QA REQUIREMENTS IDENTIFIED IN CHAPTER N OF ANSI/AISC 360 SPECIFICATIONS. THE REQUIREMENTS OF ANSI/AISC 360 STILL APPLY TO THE SFRS STRUCTURAL FRAMING.

B. CHAPTER J OF ANSI/AISC 341 IS THE QUALITY ASSURANCE PLAN (QAP) FOR STRUCTURAL STEEL FRAMING DESIGNATED AS SFRS IN THE RELATED DOCUMENTS STRUCTURAL DRAWINGS.

C. UNLESS OTHERWISE SPECIFIED, QUALITY CONTROL (QC) AND QUALITY ASSURANCE (QA) SHALL BE IN ACCORDANCE WITH CHAPTER N REQUIREMENTS OF ANSI/AISC 360 FOR FABRICATION, ERECTION, AND COATINGS ASSOCIATED WITH STRUCTURAL STEEL FRAMING NOT DESIGNATED AS SFRS IN THE RELATED DOCUMENTS STRUCTURAL DRAWINGS.

D. CHAPTER N OF ANSI/AISC 360 IS THE QUALITY ASSURANCE PLAN (QAP) FOR STRUCTURAL STEEL FRAMING NOT DESIGNATED AS SFRS IN THE RELATED DOCUMENTS STRUCTURAL DRAWINGS.

E. QUALITY CONTROL SHALL BE PROVIDED BY THE FABRICATOR, ERECTOR, OR OTHER RESPONSIBLE CONTRACTOR AS APPLICABLE.

F. QUALITY ASSURANCE SHALL BE PROVIDED BY A THIRD PARTY ("OTHERS"). CONTRACTOR SHALL IDENTIFY THE THIRD PARTY THAT WILL BE PROVIDING QA ASSOCIATED WITH FABRICATION AND ERECTION WORK PRIOR TO FABRICATION.

G. QA AGENCY'S WRITTEN PRACTICES FOR THE MONITORING AND CONTROL OF THE AGENCY'S OPERATIONS SHALL INCLUDE:

1) THE AGENCY'S PROCEDURES FOR THE SELECTION AND ADMINISTRATION OF INSPECTION PERSONNEL, DESCRIBING THE TRAINING, EXPERIENCE AND EXAMINATION REQUIREMENTS FOR QUALIFICATION AND CERTIFICATION OF INSPECTION PERSONNEL, AND;

2) THE AGENCY'S INSPECTION PROCEDURES, INCLUDING GENERAL INSPECTION, MATERIAL CONTROLS, AND VISUAL WELDING INSPECTION.

H. PROVIDE A LIST OF QUALIFICATIONS FOR THE MANAGEMENT AND QA PERSONNEL DESIGNATED FOR THE PROJECT INCLUDING AWS INSPECTION CERTIFICATIONS AS REQUIRED PER ANSI/AISC 341 CHAPTER J.

I. PROVIDE THE QUALIFICATION RECORDS FOR INSPECTORS AND NDT TECHNICIANS FOR THE PROJECT AS REQUIRED PER ANSI/AISC 341 CHAPTER J.

GENERAL NOTES AND SPECIFICATIONS, CONT. NEXT SHEET

PUGET SOUND NAVAL SHIPYARD
CODE 2370
ENGINEERING DIVISION

NO DEVIATIONS SHALL BE MADE
WITHOUT CODE 2370 APPROVAL

DRAWING NO. **2370-1835**

TITLE **GENERAL NOTES AND SPECIFICATIONS**

SCALE NA | **Sheet 3 of 4** | REV. **ORIG**

TITLE GENERAL NOTES AND SPECIFICATIONS | REV. ORIG | SHEET 1 | DWG. NO. 2370-1835

12. DESIGN DELIVERABLES:

THE DELIVERABLES AND TIMING FOR DELIVERABLES IS LAID OUT IN TABLE 12. ADDITIONAL INFORMATION ABOUT THE DELIVERABLES IS BELOW.

1. CONTRACTORS PERFORMING SHOP COATING OF STRUCTURAL STEEL SHALL PROVIDE DOCUMENTATION FOR EOR REVIEW, VERIFYING CERTIFICATION IN ACCORDANCE WITH AISC 420/SSPC-QP-3.
2. FOR EACH TYPE OF COATING SELECTED, INCLUDE VENDOR NAME/FORMULA OF COATING SELECTED, PREPARATION AND APPLICATION INSTRUCTIONS FROM VENDOR INCLUDING, MSDS, VOC, LEAD/CHROMATES, AND ANY INFORMATION DOCUMENTING CONFORMANCE WITH THE SPECIFIED REQUIREMENTS FOR EOR REVIEW.
3. SUBMIT DOCUMENTATION FOR EOR REVIEW CONFIRMING DFT'S OF APPLIED COATINGS SATISFY THE SPECIFIED DFT'S FOR THE APPLICABLE COATING SYSTEM.
4. STRUCTURAL STEEL FABRICATORS SHALL BE CERTIFIED TO THE AISC 201 STANDARD FOR STEEL BUILDING STRUCTURES (STD).
5. ERECTORS SHALL PARTICIPATE IN THE AISC ERECTOR CERTIFICATION PROGRAM AND BE CERTIFIED AS AN AISC CERTIFIED STEEL ERECTOR (CSE).
6. INCLUDE CERTIFIED COPIES OF MILL REPORTS COVERING CHEMICAL AND PHYSICAL PROPERTIES. FOR STRUCTURAL STEEL FOR WHICH EVIDENCE EXISTS THAT THE STEEL MAY NOT CONFORM TO ASTM REQUIREMENTS, THE CONTRACTOR (WHEN PERMITTED BY THE EOR) SHALL ENGAGE THE SERVICES OF AN INDEPENDENT TESTING LABORATORY TO TEST THE MATERIAL ACCORDING TO ASTM A6/A6M AND SUBMIT CERTIFIED TEST REPORTS THAT VERIFY CONFORMITY TO ASTM STANDARDS.
7. FOR HIGH-STRENGTH BOLTS, INCLUDING NUTS, WASHERS, AND DIRECT TENSION INDICATORS (DTI'S) THE CONTRACTOR SHALL PROVIDE CERTIFIED COPIES OF MILL REPORTS COVERING PHYSICAL AND CHEMICAL PROPERTIES.
8. FOR WELDING ELECTRODES (EACH TYPE) AND RODS, PROVIDE MANUFACTURER'S PRODUCT DATA SHEETS OR CATALOG DATA FOR ALL FILLER METALS TO BE USED.
9. PROVIDE TYPICAL COPIES OF MANUFACTURER'S CERTIFICATE OF CONFORMANCE FOR ELECTRODES, FLUXES, & SHIELDING GASES.
10. PROVIDE COPIES OF MATERIAL TEST REPORTS IN ACCORDANCE WITH SECTION A3.1 OF ANSI/AISC 360.
11. PROVIDE COPIES OF MATERIAL TEST REPORTS OR MANUFACTURER'S CERTIFICATIONS PROVIDING EVIDENCE THAT HIGH STRENGTH BOLTS, NUTS, WASHERS, AND DIRECT TENSION INDICATORS (DTI'S) CONFORM TO THE ASTM CRITERIA SPECIFIED IN PART 2 – PRODUCTS AND SECTION A3.3 OF ANSI/AISC 360.
12. PROVIDE APPLICABLE MANUFACTURER'S CERTIFICATIONS THAT THE FILLER METALS USED FOR SEISMIC FORCE RESISTING SYSTEM (SFRS) WELDS, ARE CLASSIFIED IN ACCORDANCE WITH AWS A5 STANDARDS THAT MEET OR EXCEED THE MECHANICAL PROPERTIES FOR YIELD STRENGTH, TENSILE STRENGTH, CVN TOUGHNESS, AND ELONGATION REQUIREMENTS OF AWS D1.8/D1.8M CLAUSE 6.3. SEE PART 2 – PRODUCTS FOR SUMMARY OF FILLER METAL TEST REQUIREMENTS.
13. PROVIDE APPLICABLE MANUFACTURER'S CERTIFICATIONS THAT ALL WELDING ELECTRODES AND ELECTRODE-FLUX COMBINATIONS SATISFY THE REQUIREMENTS OF TABLE 6.3 OF AWS D1.8/D1.8M BASED ON WELD PROCESSES TO BE USED FOR SFRS WELDING. SEE PART 2 – PRODUCTS FOR SUMMARY OF FILLER METAL DIFFUSIBLE HYDROGEN LEVEL REQUIREMENTS.
14. SUBMIT SHOP DRAWINGS FOR EOR REVIEW PRIOR TO FABRICATION SHOWING COMPLETE DETAILS AND SCHEDULES FOR FABRICATION AND ASSEMBLY OF STRUCTURAL STEEL.
15. SUBMIT ERECTION DRAWINGS FOR EOR REVIEW PRIOR TO FABRICATION SHOWING FIELD-INSTALLATION AND MEMBER-PLACING INSTRUCTIONS FOR LOCATING AND ATTACHING THE INDIVIDUAL SHIPPING PIECES.
16. NDT PROCEDURES AND EQUIPMENT CALIBRATION RECORDS FOR NDT TO BE PERFORMED AND EQUIPMENT TO BE USED FOR THE PROJECT SHALL BE PROVIDED FOR REVIEW.
17. PROVIDE AWS OR WABO CERTIFICATIONS FOR WELDERS AND WELDING SUPERVISORS PERFORMING OR SUPERVISING AWS D1.1/D1.1M AND AWS D1.8/D1.8M WELDING.
18. PROVIDE AWS CERTIFICATIONS FOR INSPECTORS FOR SCWI – SENIOR CERTIFIED WELD INSPECTORS AND/OR CWI – CERTIFIED WELD INSPECTORS. ALSO PROVIDE SUPPLEMENTAL CWI/SCWI ENDORSEMENTS (IF APPLICABLE).
19. PROVIDE WELD PROCEDURE SPECIFICATIONS (WPS'S) FOR ALL AWS D1.1/D1.1M AND AWS D1.8/D1.8M WELDED JOINTS ASSOCIATED WITH STRUCTURAL STEEL. SUBMIT TEST REPORTS SHOWING SUCCESSFUL PASSAGE OF QUALIFICATION TESTS FOR ALL NON-PREQUALIFIED WPS'S.
20. PROVIDE BOLTING INSTALLATION PROCEDURES FOR ASTM A325 BOLTS ASSEMBLED WITH ASTM A563 NUTS, ASTM 436 WASHERS, AND ASTM F959 DIRECT TENSION INDICATING WASHERS (DTI'S).
21. PROVIDE WRITTEN DOCUMENTATION OF THE LOAD TESTS AS DESCRIBED IN THE DRAWINGS (2370-1830, 2370-1831, 2370-1832, & 2370-1833).
22. PROVIDE WRITTEN DOCUMENTATION THAT THE BRIDGE OF DWG 2370-1830 MEET THE TOLERANCES SPECIFIED WITHIN THESE SPECIFICATIONS.
23. PROVIDE WRITTEN DOCUMENTATION THAT THE BRIDGES OF DWG 2370-1831 MEET THE TOLERANCES SPECIFIED WITHIN THESE SPECIFICATIONS.
24. PROVIDE WRITTEN DOCUMENTATION THAT THE TOWERS MEET THE TOLERANCES SPECIFIED WITHIN THESE SPECIFICATIONS. PROVIDE MEASUREMENTS OF CRITICAL DIMENSIONS AS SHOWN ON SHEET 28 OF 2370-1832.
25. PROVIDE WRITTEN DOCUMENTATION THAT THE TOWERS MEET THE TOLERANCES SPECIFIED WITHIN THESE SPECIFICATIONS. PROVIDE MEASUREMENTS OF CRITICAL DIMENSIONS AS SHOWN ON SHEET 28 OF 2370-1833.

Table 12: Key Structural Requirements Deliverables

Item	Description	Paragraph	Deliverable Timing
Shop Applied Coatings For Metal			
Item	Description	Paragraph	Deliverable Timing
S-001	Qualifications for Contractor's Painting Structural Steel	12.1	Pre-Construction
S-002	Product Data for Coatings	12.2	Pre-Construction
S-003	DD1 & DD5 Bridge and Tow er; Coating DFT Inspection	12.3	Post-Construction
Structural Steel Framing			
Item	Description	Paragraph	Deliverable Timing
S-004	Fabricator's AISC Certifications	12.4	Pre-Construction
S-005	Erector's AISC Certifications	12.5	Pre-Construction
S-006	Product Data for Structural Steel	12.6	Post-Construction
S-007	Product Data for High Strength Bolts	12.7	Post-Construction
S-008	Product Data for Welding Electrodes	12.8	Post-Construction
S-009	Typical Certifications of Conformance for Electrodes, Fluxes, & Shielding Gases	12.9	Post-Construction
S-010	Test Reports for Main Structural Steel Elements	12.10	Post-Construction
S-011	Test Reports for High Strength Fasteners	12.11	Post-Construction
S-012	Weld Filler Metal Mechanical Properties	12.12	Post-Construction
S-013	Weld Filler Metal Diffusible Hydrogen Level	12.13	Post-Construction
S-014	Shop Draw ings for Structural Steel	12.14	Pre-Construction
S-015	Erection Draw ings for Structural Steel	12.15	Pre-Construction
S-016	NDT Procedures and Equipment Calibration Records for NDT	12.16	Post-Construction
S-017	AWS or WABO Certifications for Welders and Welding Supervisors	12.17	Post-Construction
S-018	AWS Certifications for Welding Inspectors	12.18	Post-Construction
S-019	Welding Procedures	12.19	Post-Construction
S-020	Bolting Procedures	12.20	Post-Construction
Buckling Restrained Braced Frames			
Item	Description	Paragraph	Deliverable Timing
S-021	Buckling-Restrained Brace Manufacturer's Quality Assurance Plan	3.EE.1)(5)(a)	Pre-Construction
S-022	Preliminary Fabrication Draw ings	3.EE.1)(5)(b)(i)	Pre-Construction
S-023	Calculations	3.EE.1)(5)(b)(ii)	Pre-Construction
S-024	Final BRB Details	3.EE.1)(5)(c)	Pre-Construction
S-025	Erection Draw ings	3.EE.1)(5)(d)	Pre-Construction
S-026	Certified Material Test Reports	3.EE.1)(5)(e)	Pre-Construction
S-027	Qualification Testing Report	3.EE.1)(5)(f)	Pre-Construction
S-028	Welding Certificates	3.EE.1)(5)(g)	Pre-Construction
S-029	Painting Certificates	3.EE.1)(5)(h)	Pre-Construction
Miscellaneous			
Item	Description	Paragraph	Deliverable Timing
S-030	Shipping Plan	10.b	Pre-Shipment
S-031	QA Agencies Written Practices (third party)	11.g	Pre-Construction
S-032	Qualifications of Management and QA Personnel (third party)	11.h	Pre-Construction
S-033	Qualifications for Inspectors and NDT Technicians (third party)	11.i	Pre-Construction
S-034	NDT Procedures and Equipment Calibration Records for NDT (third party)	12.16	Post-Construction
S-035	Liftpoint Load Test Reports	12.21	Post-Construction
S-036	Final Survey - DD1 Bridge	12.22	Post-Construction
S-037	Final Survey - DD5 Bridge	12.23	Post-Construction
S-038	Final Survey - DD1 Tow er	12.24	Post-Construction
S-039	Final Survey - DD5 Tow er	12.25	Post-Construction

PUGET SOUND NAVAL SHIPYARD
CODE 2370
ENGINEERING DIVISION

NO DEVIATIONS SHALL BE MADE WITHOUT CODE 2370 APPROVAL

DRAWING NO. **2370-1835**

TITLE **GENERAL NOTES AND SPECIFICATIONS**

SCALE NA | **Sheet 4 of 4** | REV. **ORIG**

TITLE GENERAL NOTES AND SPECIFICATIONS | REV. ORIG | SHEET 1 | DWG. NO. 2370-1835