GENERAL NOTES

1. This drawing provides construction details for manufacture of components for fabrication of the complete RAE coaming assembly.

2. MANUFACTURING REQUIREMENTS:

A. Unless specified otherwise in drawing 2301-3696, all tolerances are specified in the drawing block in the lower right corner of the drawing.

B. Smooth or round over all sharp and cut edges and remove all weld splatter from exposed surfaces.

C. Corners may be sniped to clear fillets of previously deposited welds and existing material radius. Close these chamfer by welding where possible. Access holes provide in the ends of beams to facilitate welding need not be filled.

D. The use of slot and tabs to index position of parts for manufacture is allowed. Slot-tab joint will require plug welding and ground flush.

E. The use of etching on material for alignment is also allowed.

F. For ease of identification during and after fabrication and painting, the piece number may be cut into the flange area of the material. Numbers shall be ½" high. Stainless pieces may be laser etched with piece number.

3. MATERIAL REQUIREMENTS:

A. Material specifications are shown in the List of Materials on sheet 2 of this drawing.

B. Stainless steel material substitutions are authorized for stainless steel components provided the substitution material meets or exceeds the mechanical/physical properties and satisfies the dimensional requirements of the material specified.

C. Carbon steel material substitutions are authorized for plate, bar, angle, and tube provided the substitution material meets or exceeds the mechanical/physical properties and satisfies the dimensional requirements of the material specified.

D. Substitutions of material for structural shapes such as columns and beams shall only be made when authorized by Puget Sound Naval Shipyard (PSNS), Code 2370.24.

4. WELDING REQUIREMENTS:

A. Welding performed by contractor shall comply with welding procedure and performance requirements of ANSI/AWS D1.1, (Reference A) for Steel, and ANSI/AWS D1.6 (Reference B) for Stainless Steel,

B. Weld symbols shown are in accordance with ANSI/AWS A2.4 (Reference C).

C. Visually inspect all welds in accordance with ANSI/AWS D1.1, (Reference A) for Steel and ANSI/AWS D1.6 (Reference B) for Stainless Steel with the following exception: No undersized welds are allowed and no porosity greater than 1/8" is allowed.

D. Weld sizes shown are minimum acceptable sizes. The minimum bevel angle on all bevel welds shall be 45 degrees per single bevel.

E. Welds shall be sequenced to minimize distortion. Where distortion does occur, straightening per ANSI/AWS D1.1, (Reference A) for Steel and ANSI/AWS D1.6 (Reference B) for Stainless Steel shall be performed to achieve tolerances of the drawing.

5. SURFACE FINISH REQUIREMENTS:

A. All machined surfaces shall have a surface roughness of 125 to 63 or better.

B. Welded surfaces on stainless material shall be free of cracks, craters, burrs, sharp edges, weld splatter and effects that would cause penetrant indications. The weld surface shall be generally smooth to the touch. A large amount of contour grinding may be necessary depending on the welding process.

C. Non-welded stainless steel surfaces shall be free of weld splatter, deep scratches, burrs, loose rust, and in general meet an RA (roughness average) of 250 surface finish allowing surface to be easily cleaned using a clean cloth without snagging, and a cleaning solution.

D. Mill surfaces on stainless steel are acceptable provided deep scratches, dents, and burrs, are repaired or removed.

E. Glass bead blasting or buffing with abrasive pad of stainless steel surfaces is required to achieve high quality finish, to remove heat marks.

6. ASSEMBLY CHECK FIT AND SHIPPING INSTRUCTIONS:

A. Contractor shall assemble and check fit the RAE coaming assembly prior to painting, to ensure the assembly meets the dimensional tolerances of the drawing and all fasteners can be installed in all of the bolt holes. The check fit may be performed using Bolt Assembly "A" (See View 36D), so long as the nylock nut, PC 087 is not used. Standard nut may be used as substitute for nylock nut for check fit.

B. The items in the list of materials which make-up Bolt Assembly "B" (See View 36B) and nut and washer (PC 090 & PC 091) of Bolt Assembly "C" (see view 36A) shall be ordered and shipped with the RAE coaming assembly in a suitable container for shipping.

C. After check fit of the RAE coaming assembly, contractor shall match mark the bolting connection joints to ensure the RAE coaming assembly can be reassembled in the same configuration after receipt. Paint match marking using 1/2" (min.) tall letters, with a contrasting color to that of the top-coat on pieces that do not have piece number cut into them. (See Note 2. F.)

D. Contractor has option to ship fully or partially assembled if practical, in lieu of disassembly after check fit. If shipped fully assembled, then installation of Bolt Assembly "A" (See View 36D), is required.

GENERAL NOTES (*continued*)

7. PAINTING REQUIREMENTS:

A. GENERAL: This general note applies to carbon steel (ferrous) surfaces. Fasteners, aluminum, and stainless steel surfaces shall not be painted per General Note 7.C.

B. PREPARATION, APPLICATION, & INSPECTION OF THE PAINT: Prepare carbon steel (Ferrous) surfaces by dry abrasive blasting to near white metal prior to painting. This note does not apply to stainless steel surfaces.

C. PAINT / COATING SYSTEM: Paint carbon steel surfaces with one of the following processes:

1) Spray Coating: The first coat shall be Ameron "Amercoat 235" (MIL-P-23236) epoxy coating applied to a minimum DFT of 4 mils (color = buff or off-white). The top coat shall be Ameron "PSX-1001" single pack acrylic polysiloxane applied to a DFT of 3 mils (min). The top coat shall be haze gray. *Note: Amercoat 235 was formerly known as "Bar-rust 235" and "Devoe 235".*

2) Powder coating: The primer coat shall be Cardinal E396 GR1372 zinc rich epoxy powder coating applied to a minimum dry film thickness (DFT) of 2 mils. The top coat shall be Gray ANSI 61 (Cardinal T008-GR736 or P004-GR16) powder coating applied to a minimum DFT of 3 mils. Do not coat threaded holes or lift holes. Do not coat plastic surfaces.

D. ENGINEER'S NOTE:

1) Touch-up: Cardinal A-4102-37038 acrylic aerosol is a compatible gray touch-up coating for the powder-coat top coat of note 7.C.1)

2) Do not paint pieces 094, 095, 096, 097, and 072.

8. ASSEMBLY OF BOLTED JOINTS:

A. Ensure joint surfaces that will become inaccessible upon assembly of the bolted joint are coated per painting note 7 prior to assembly of the joint.

B. Bolted, hex head fasteners can be oriented as shown in the drawing or may be turned 180 degrees from shown to facilitate assembly of the bolted joints.

REFERENCES

A. ANSI/AWS D1.1; Structural Welding Code - Steel

B. ANSI/AWS D1.6; Structural Welding Code - Stainless Steel

C. ANSI/AWS A2.4; Standard Symbols For Welding, Brazing And Nondestructive Examination

REVISIONS

SYMB	REV	DESCRIPTION	DATE	CHANGE BY	APPROVAL
A	A	1. INCORPORATED DRN'S A-1 &A-2. 2. ADDED SERVICE SLEEVE ASSEMBLIES AS SHOWN IN SEVERAL VIEWS. 3. UPDATED MATERIAL LIST TO REFLECT ADDED SERVICE SLEEVE ASSEMBLIES.	6/19/15	/S/ Mark Shamian	6-19-15 /S/ Jim Byrnes

DISTRIBUTION STATEMENT: N/A

A.D.C. REVIEW

	SIGNATURE	DATE
	/S/ Jim Byrnes	11-20-09

CONCURRENCE

CODE	SIGNATURE	DATE

/S/ SIGNATURE ON FILE APPROVAL

	SIGNATURE	DATE
BRANCH SUPV.	/S/ Jim Byrnes	11-20-09
CHECKED	/S/ John Terrell per Telecon	11-20-09
DRAWN	/S/ Mark Shamian	11-20-09
DRAWN		
DESIGNED	/S/ Mark Shamian	11-20-09
FILE PATH		

PUGET SOUND NAVAL SHIPYARD
CODE 2370
ENGINEERING DIVISION

Unless otherwise specified, dimensions are in inches.
Decimals:
X.X = ±0.13
X.XX = ±0.025
X.XXX = ±0.003
X.XXXX = ±0.0005
Fractions = ±1/16 < 36"
Fractions = ±1/8 > 36"
Angles = ±0.5°
Drawing dimensional and geometric tolerances per ASME Y14.5M-1994

NO DEVIATIONS SHALL BE MADE WITHOUT CODE 2370 APPROVAL

DRAWING NO.	FSR	RF #
2301-3696	2370-3696	N/A

TITLE
RAE COAMING MODIFICATIONS

SCALE: AS SHOWN | **Sheet 1 of 30** | REV. **A**

TITLE: RAE COAMING MODIFICATIONS
DWG. NO. 2301-3696
REV: A
SHEET 1

LIST OF MATERIALS

PC#	QTY	DESCRIPTION	MATERIAL	MAT SPEC	Panel	Comments
001	2	PL, 3/16	Steel	ASTM A36	82A	
002	2	PL, 3/16	Steel	ASTM A36	85A	
003	2	PL, 3/16	Steel	ASTM A36	87A	
004	2	PL, 3/16	Steel	ASTM A36	89A	
005	2	PL, 3/16	Steel	ASTM A36	87A	
006	2	PL, 3/16	Steel	ASTM A36	85A	
007	2	PL, 3/16	Steel	ASTM A36	82A	
008	1	PL, 3/16	Steel	ASTM A36	94A	
009	1	PL, 3/16	Steel	ASTM A36	97C	
010	2	PL, 3/16	Steel	ASTM A36	99C	
011	1	PL, 3/16	Steel	ASTM A36	99A	
012	1	PL, 3/16	Steel	ASTM A36	92C	
013	2	PL, 3/16	Steel	ASTM A36	108A	
014	8	PL, 3/16	Steel	ASTM A36	110C	
015	2	PL, 3/16	Steel	ASTM A36	108C	
015A	2	PL, 3/16	Steel	ASTM A36	108C	
016	2	PL, 3/16	Steel	ASTM A36	108A	
017	1	PL, 3/16	Steel	ASTM A36	92C	
018	1	PL, 3/16	Steel	ASTM A36	99A	
019	1	PL, 3/16	Steel	ASTM A36	97C	
020	1	PL, 3/16	Steel	ASTM A36	94A	
021	8	PL, 3/16	Stainless Steel, 304		112C	
022	8	SHEET, 11 GA	Stainless Steel, 304		117A	
023	8	SHEET, 11 GA	Stainless Steel, 304		117B	
024	2	PL, 3/16	Stainless Steel, 304		114C	
025	2	SHEET, 11 GA	Stainless Steel, 304		119B	
026	2	SHEET, 11 GA	Stainless Steel, 304		119B	
027	2	SHEET, 11 GA	Stainless Steel, 304		117C	
028	2	PL, 3/16	Stainless Steel, 304		114C	
029	2	SHEET, 11 GA	Stainless Steel, 304		117C	
030	2	PL, 3/16	Stainless Steel, 304		119C	
031	2	SHEET, 11 GA	Stainless Steel, 304		125D	
032	2	SHEET, 11 GA	Stainless Steel, 304		116C	
033	2	SHEET, 11 GA	Stainless Steel, 304		119A	
034	2	SHEET, 11 GA	Stainless Steel, 304		119A	
035	2	SHEET, 11 GA	Stainless Steel, 304		125D	
036	2	PL, 3/16	Stainless Steel, 304		119C	
037	2	SHEET, 11 GA	Stainless Steel, 304		116C	
038	1	PL, 3/16	Stainless Steel, 304		114C	
039	1	SHEET, 11 GA	Stainless Steel, 304		125C	
040	1	SHEET, 11 GA	Stainless Steel, 304		125C	
041	1	PL, 3/16	Stainless Steel, 304		114A	
042	1	PL, 3/16	Stainless Steel, 304		112C	
043	1	SHEET, 11 GA	Stainless Steel, 304		125A	
044	1	SHEET, 11 GA	Stainless Steel, 304		125A	
045	1	SHEET, 11 GA	Stainless Steel, 304		125B	
046	1	PL, 3/16	Stainless Steel, 304		112C	
047	1	SHEET, 11 GA	Stainless Steel, 304		125B	
048	38	PL, 1/4	Steel	ASTM A36	105A	
049	4	PL, 1/4	Steel	ASTM A36	104A	
050	6	PL, 1/4	Steel	ASTM A36	141A	
051	6	PL, 1/4	Steel	ASTM A36	137B	

LIST OF MATERIALS

PC#	QTY	DESCRIPTION	MATERIAL	MAT SPEC	Panel	Comments
053	6	PL, 1/4	Steel	ASTM A36	137A	
054	28	PL, 1/4	Steel	ASTM A36	106C	
055	2	PL, 1/4	Steel	ASTM A36	139B	
056	2	PL, 1/4	Steel	ASTM A36	101B	
057	2	PL, 1/4	Steel	ASTM A36	138A	
058	2	PL, 1/4	Steel	ASTM A36	102A	
059	2	PL, 1/4	Steel	ASTM A36	141C	
060	2	PL, 1/4	Steel	ASTM A36	102C	
061	2	PL, 1/4	Steel	ASTM A36	140A	
062	2	PL, 1/4	Steel	ASTM A36	103A	
063	2	PL, 3/16	Steel	ASTM A36	117D	
064	2	PL, 3/16	Steel	ASTM A36	117D	
065	10	HANDLE, CHEST	Stainless steel	Commercial	78A	GUDEN # WHSS1207 OR EQUIVALENT
066	10	PL, 3/16" x 15-1/4" OD	Stainless Steel, 304		127A	
067	10	GASKET, RUBBER, 1/4" x 15 1/2" OD x 12 1/2" ID	Rubber	MIL-R-900	128A	
068	28	PL 1/4" x 3/8" x 3/4"	Steel	ASTM A36	126A	
069	14	PL, 3/16" x 3/4" x 22" Approx.	Steel	ASTM A36	126B	Roll to 7" OD
070	14	PL, 3/16 x 7 1/4" OD	Steel	ASTM A36	127B	
071	2	PL, 3/16	Steel	ASTM A36	127D	
072	4	PL, 3/16	Steel	ASTM A36	137A	DO NOT PAINT
073	14	ROD, THREADED, 1/2-13 UNC x 4" LG	Steel (Zinc Plated)		80A	McMaster Carr # 95475A728 OR EQUIVALENT
074	14	GASKET, RUBBER, 1/4" x 6-1/2" OD	Rubber	MIL-R-900	130A	
075	14	PL, 3/16" x 7" x 7"	Steel	ASTM A36	129A	
076	14	PL, 3/16	Steel	ASTM A36	128B	Roll to 6 3/8" OD
078	2	PL, 3/16	Steel	ASTM A36	129C	
079	2	PL, 3/16	Steel	ASTM A36	129C	
080	4	PL, 3/16 x 2.0"	Steel	ASTM A36	129B	
081	40	Tube, Round, 0.385" ID x 0.625 OD x 0.375 LG	Stainless Steel, 304	ASTM A213/A269	48B	McMaster Carr # 89895K158 OR EQUIVALENT
082	477	SCREW, CAP, HEX HEAD, 3/8-16 UNC x 1-1/4" LG	Stainless steel		36D	McMaster Carr # 92240A626 OR EQUIVALENT
083	1250	Washer, Flat for 3/8" Capscrew	Steel (Zinc Plated)		36D	McMaster Carr # 94744A273 OR EQUIVALENT
084	20	SCREW, FLAT, SOCKET HEAD, 3/8-16 UNC x 1-1/2" LG	Steel (Zinc Plated)	ASTM F835	48B	McMaster Carr # 91247A628 OR EQUIVALENT
085	108	SCREW, CAP, HEX HEAD, 3/8-16 UNC x 1-3/4" LG (FT)	Steel (Zinc Plated)	GR 5 OR BETTER	36B	McMaster Carr # 92865A630 OR EQUIVALENT
086	40	ROD, THREADED, 3/8-16 UNC x 1 3/4 LG	Stainless steel	TYPE 18-8	78A	McMaster Carr # 95412A630 OR EQUIVALENT
087	655	Nut, HEX with Nylon INSERT, 3/8-16 UNC	Stainless Steel	Type 316	43A	McMaster Carr # 91831A127 OR EQUIVALENT
088	10	SCREW, CAP, HEX HEAD, 3/8-16 UNC x 1 3/4" (PT)	Steel (Zinc Plated)	GR 5 OR BETTER	48D	McMaster Carr # 91247A630 OR EQUIVALENT
089	31	SCREW, CAP, HEX HEAD, 1/2-13 UNC x 1-1/2" LG	Steel (Zinc Plated)	GR 5 OR BETTER	36A	McMaster Carr # 91247A628 OR EQUIVALENT
090	45	Washer, Flat for 1/2" Capscrew	Steel (Zinc Plated)	ASME B 18.22.1	36A	McMaster Carr # 98023A033 OR EQUIVALENT
091	45	Hex Nut with Nylon Locking Element, 1/2-13 UNC	Steel (Zinc Plated)	GR 5 OR BETTER	36A	McMaster Carr # 95615A210 OR EQUIVALENT
093	4	PL, 3/16	Steel	ASTM A36	126C	
094	1	PL, 3/8"	Steel	ASTM A36	132B	DO NOT PAINT
095	1	PL, 3/8"	Steel	ASTM A36	132C	DO NOT PAINT
096	1	PL, 3/8"	Steel	ASTM A36	132C	DO NOT PAINT
097	1	PL, 3/8"	Steel	ASTM A36	132B	DO NOT PAINT
098	32	HINGE, BUTT, 4" LG x 4" OPEN LG x .12 LEAF THK x .25 PIN DIA	Stainless steel	Commercial	53A	Guden # 8000401225 OR EQUIVALENT
099	256	Hex Nut with Nylon Locking Element, 1/4-20 UNC	Stainless steel	Type 304	51B	McMaster Carr # 91831A029 OR EQUIVALENT
100	256	Washer for 1/4" Capscrew	Stainless steel	TYPE 18-8	51B	McMaster Carr # 96659A106 OR EQUIVALENT
101	256	Capscrew, Flat, Socket Head, 1/4"-20 UNC x 1" LG	Stainless steel		51B	McMaster Carr # 90585A542 OR EQUIVALENT

PUGET SOUND NAVAL SHIPYARD
CODE 2370
ENGINEERING DIVISION

NO DEVIATIONS SHALL BE MADE WITHOUT CODE 2370 APPROVAL

Unless otherwise specified, dimensions are in inches.
Decimals:
X.X = ±0.13
X.XX = ±0.025
X.XXX = ±0.003
X.XXXX = ±0.0005
Fractions = ±1/16 < 36"
Fractions = ±1/8 > 36"
Angles = ±0.5°
Drawing dimensional and geometric tolerances per ASME Y14.5M-1994

DRAWING NO.	FSR	RFI#
2301-3696	2370-3696	N/A

TITLE
RAE COAMING MODIFICATIONS

SCALE		REV.
AS SHOWN	Sheet 2 of 30	A

SHEET 2
REV. A
TITLE RAE COAMING MODIFICATIONS
DWG. NO. 2301-3696

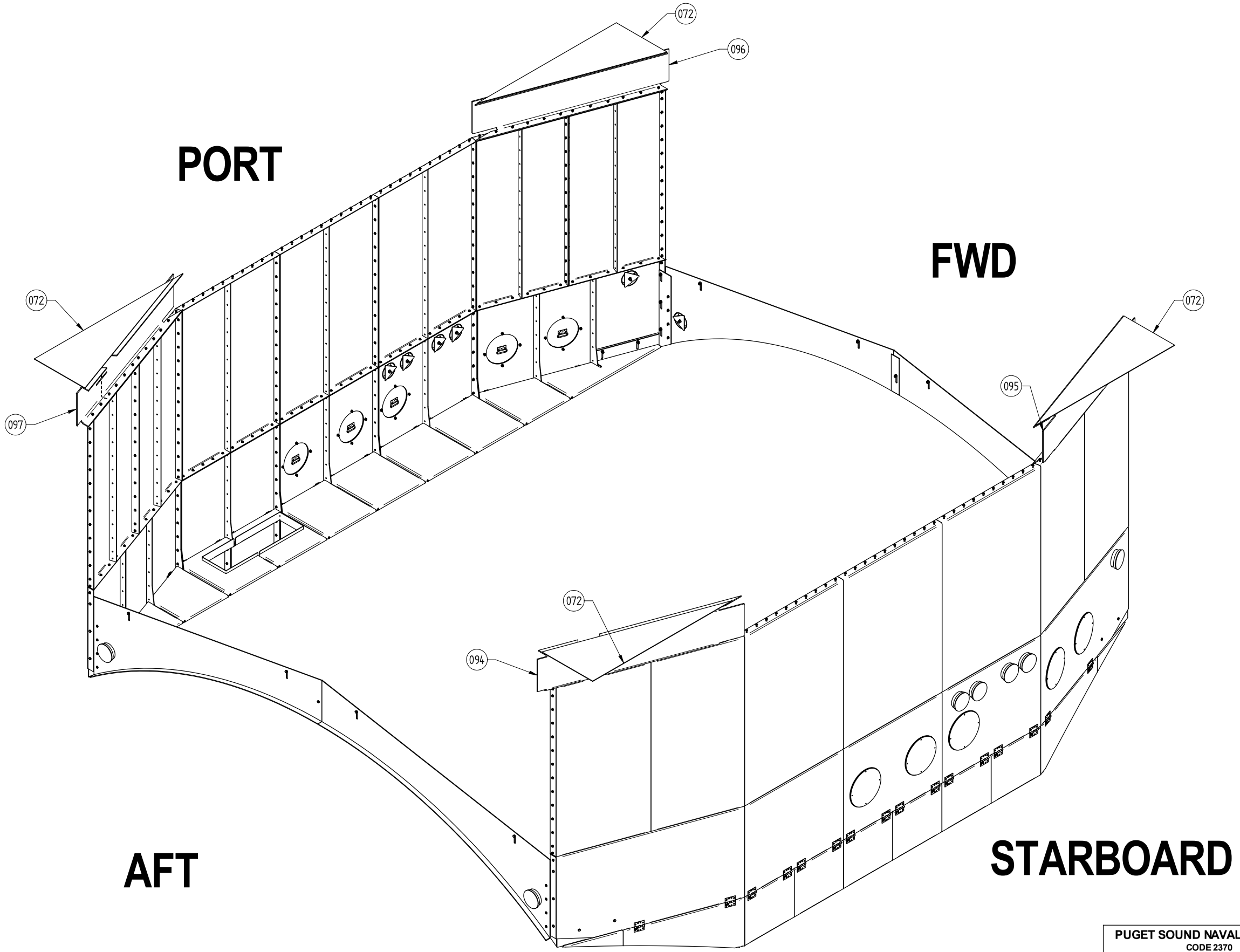

ISOMETRIC VIEW 13A
RAE COAMING ASSEMBLY

A

PUGET SOUND NAVAL SHIPYARD **CODE 2370** **ENGINEERING DIVISION**			
NO DEVIATIONS SHALL BE MADE WITHOUT CODE 2370 APPROVAL			
DRAWING NO. **2301-3696**	FSR **2370-3696**	RF # **N/A**	
TITLE **RAE COAMING MODIFICATIONS**			
SCALE AS SHOWN	**Sheet 3 of 30**	REV. **A**	

Unless otherwise specified, dimensions are in inches.
Decimals:
X.X = ±0.13
X.XX = ±0.025
X.XXX = ±0.003
X.XXXX = ±0.0005
Fractions = ±1/16 < 36"
Fractions = ±1/8 > 36"
Angles = ±0.5°
Drawing dimensional and geometric tolerances per ASME Y14.5M-1994

TITLE RAE COAMING MODIFICATIONS
REV. A
SHEET 3
DWG. NO. 2301-3696

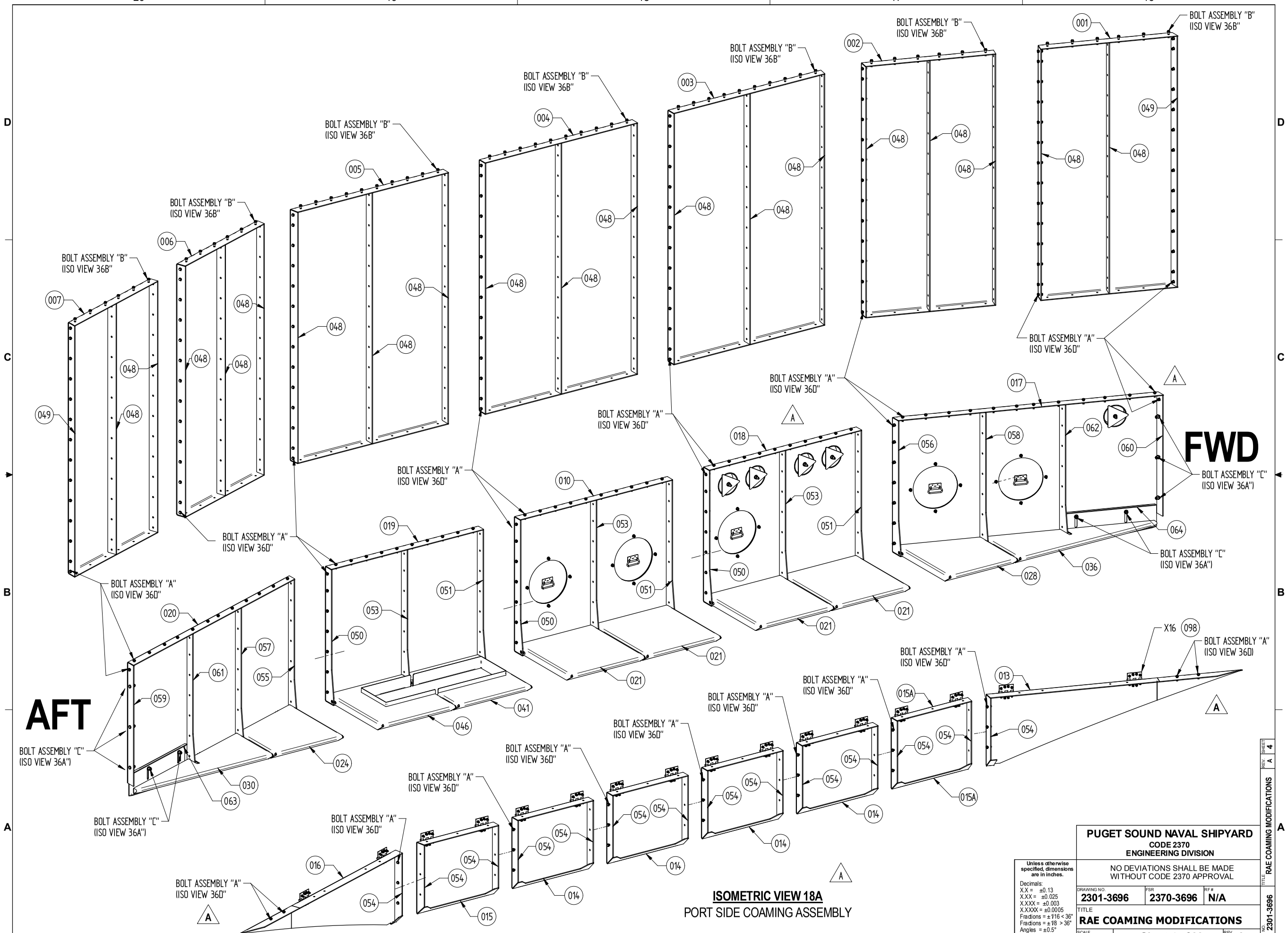

ISOMETRIC VIEW 18A

PORT SIDE COAMING ASSEMBLY

PUGET SOUND NAVAL SHIPYARD
CODE 2370
ENGINEERING DIVISION

NO DEVIATIONS SHALL BE MADE WITHOUT CODE 2370 APPROVAL

Unless otherwise specified, dimensions are in inches.
Decimals:
X.X = ±0.13
X.XX = ±0.025
X.XXX = ±0.003
X.XXXX = ±0.0005
Fractions = ±1/16 < 36"
Fractions = ±1/8 > 36"
Angles = ±0.5°
Drawing dimensional and geometric tolerances per ASME Y14.5M-1994

DRAWING NO.	FSR	REF #
2301-3696	2370-3696	N/A

TITLE: **RAE COAMING MODIFICATIONS**

SCALE: AS SHOWN | **Sheet 4 of 30** | REV. **A**

TITLE: RAE COAMING MODIFICATIONS
DWG. NO. 2301-3696
REV. A
SHEET 4

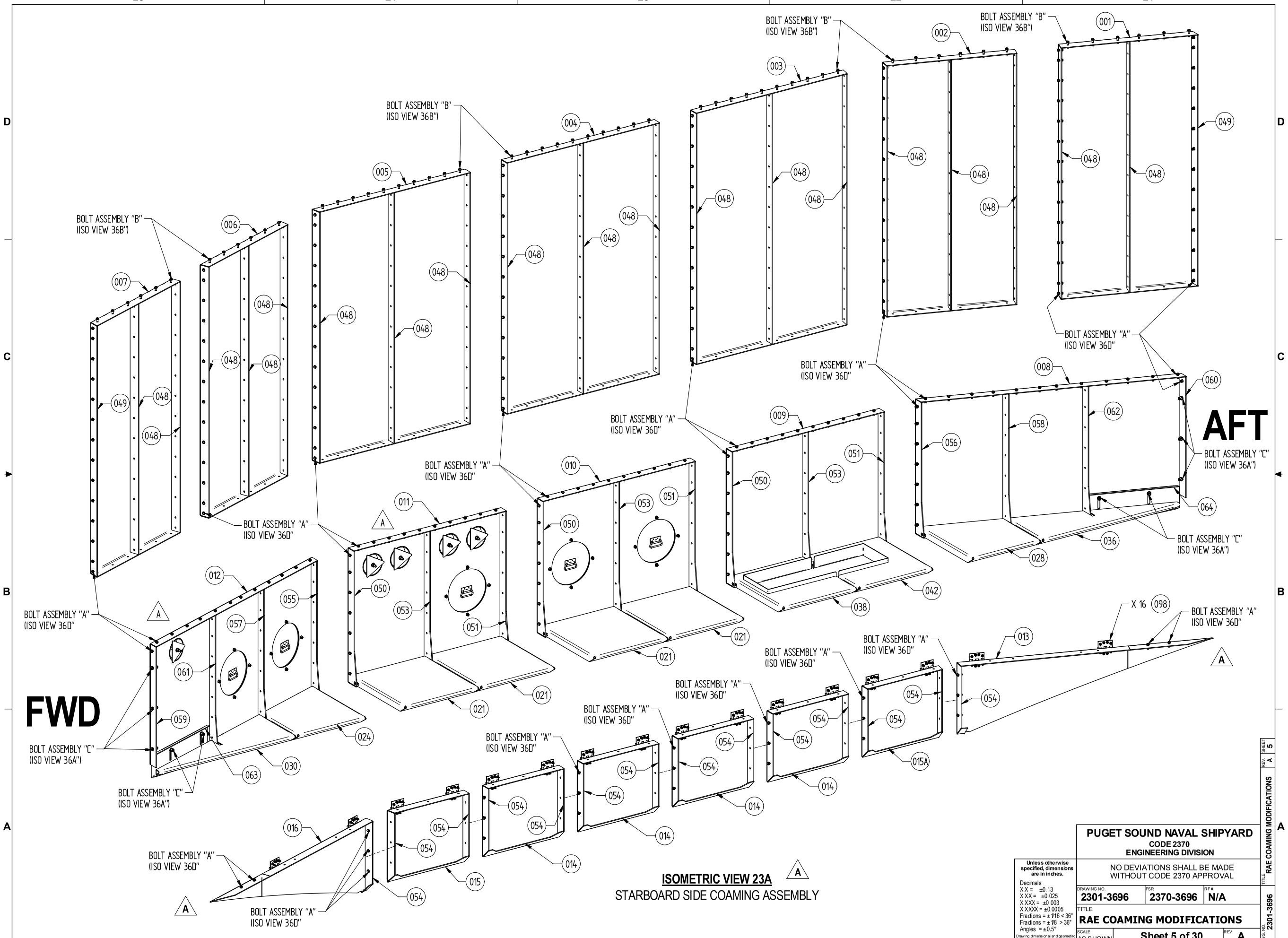

ISOMETRIC VIEW 23A

STARBOARD SIDE COAMING ASSEMBLY

PUGET SOUND NAVAL SHIPYARD **CODE 2370** **ENGINEERING DIVISION**			
NO DEVIATIONS SHALL BE MADE WITHOUT CODE 2370 APPROVAL			
DRAWING NO. **2301-3696**	FSR **2370-3696**	RF # **N/A**	
TITLE **RAE COAMING MODIFICATIONS**			
SCALE AS SHOWN	**Sheet 5 of 30**	REV. **A**	

Unless otherwise specified, dimensions are in inches.

Decimals:
X.X = ±0.13
X.XX = ±0.025
X.XXX = ±0.003
X.XXXX = ±0.0005
Fractions = ±1/16 < 36"
Fractions = ±1/8 > 36"
Angles = ±0.5°

Drawing dimensional and geometric tolerances per ASME Y14.5M-1994

TITLE: RAE COAMING MODIFICATIONS
REV: A
SHEET: 5
DWG. NO. 2301-3696

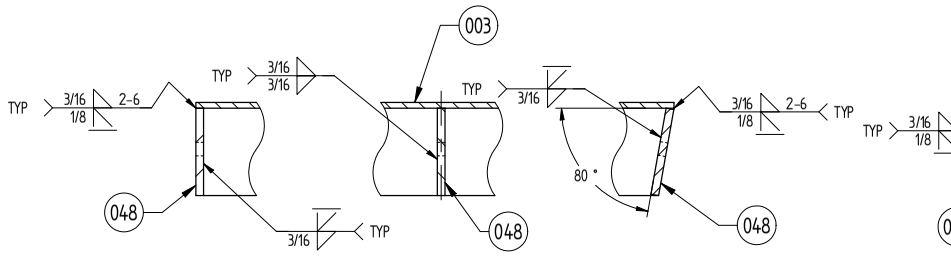

SECTION VIEW 30D(30A)
UPPER PANEL ASSEMBLY 03

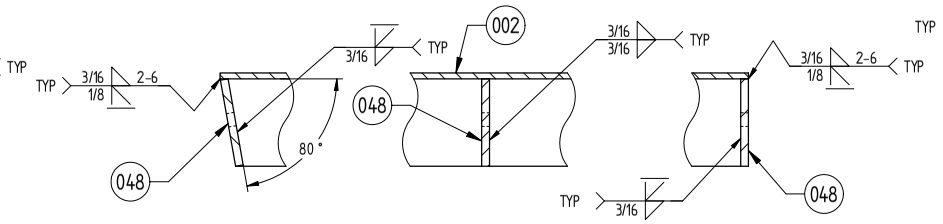

SECTION VIEW 28D(28A)
UPPER PANEL ASSEMBLY 02

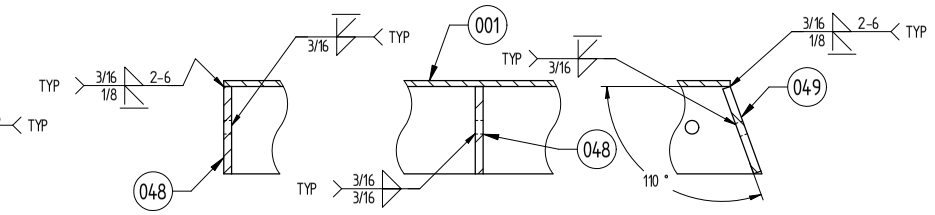

SECTION VIEW 26D(26A)
UPPER PANEL ASSEMBLY 01

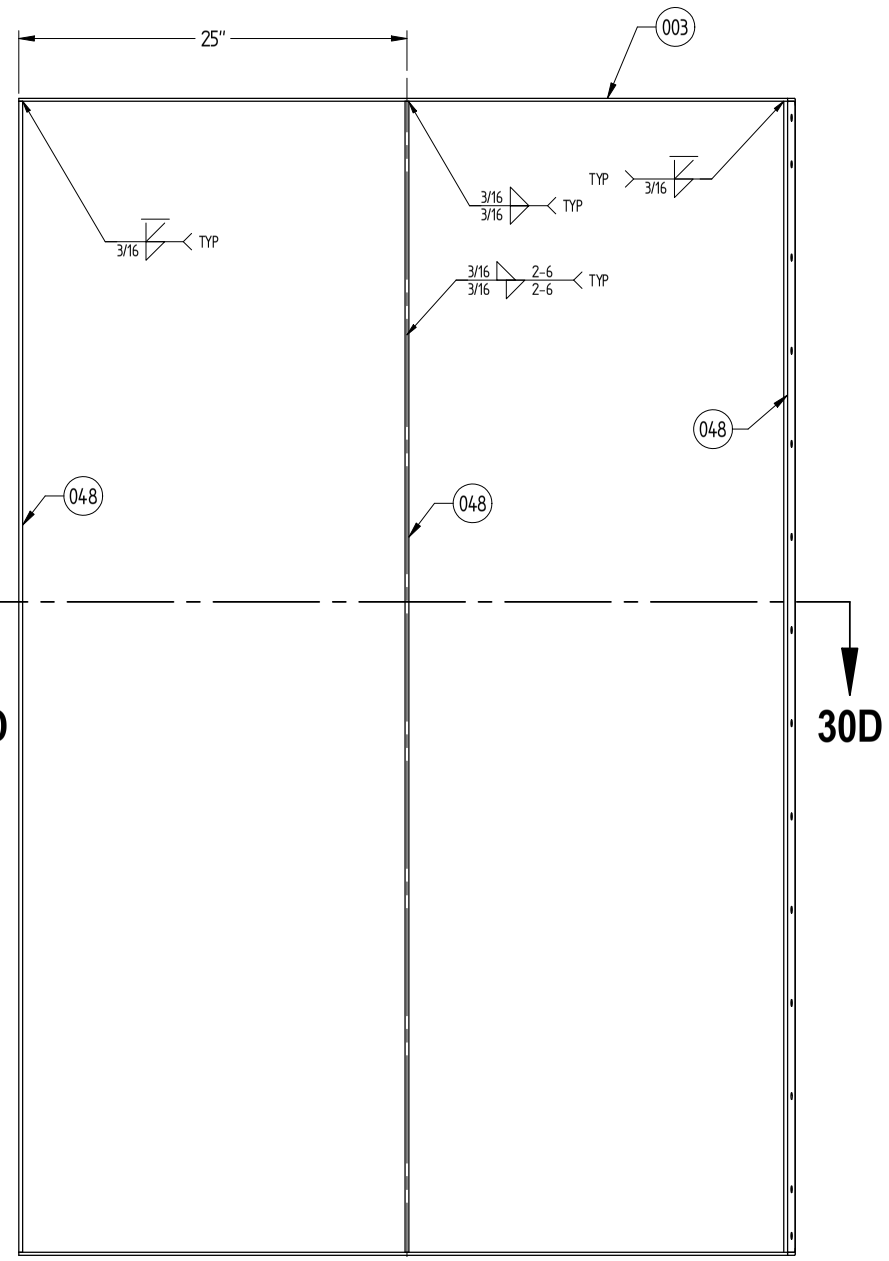

ELEVATION VIEW 30A
UPPER PANEL ASSEMBLY 03

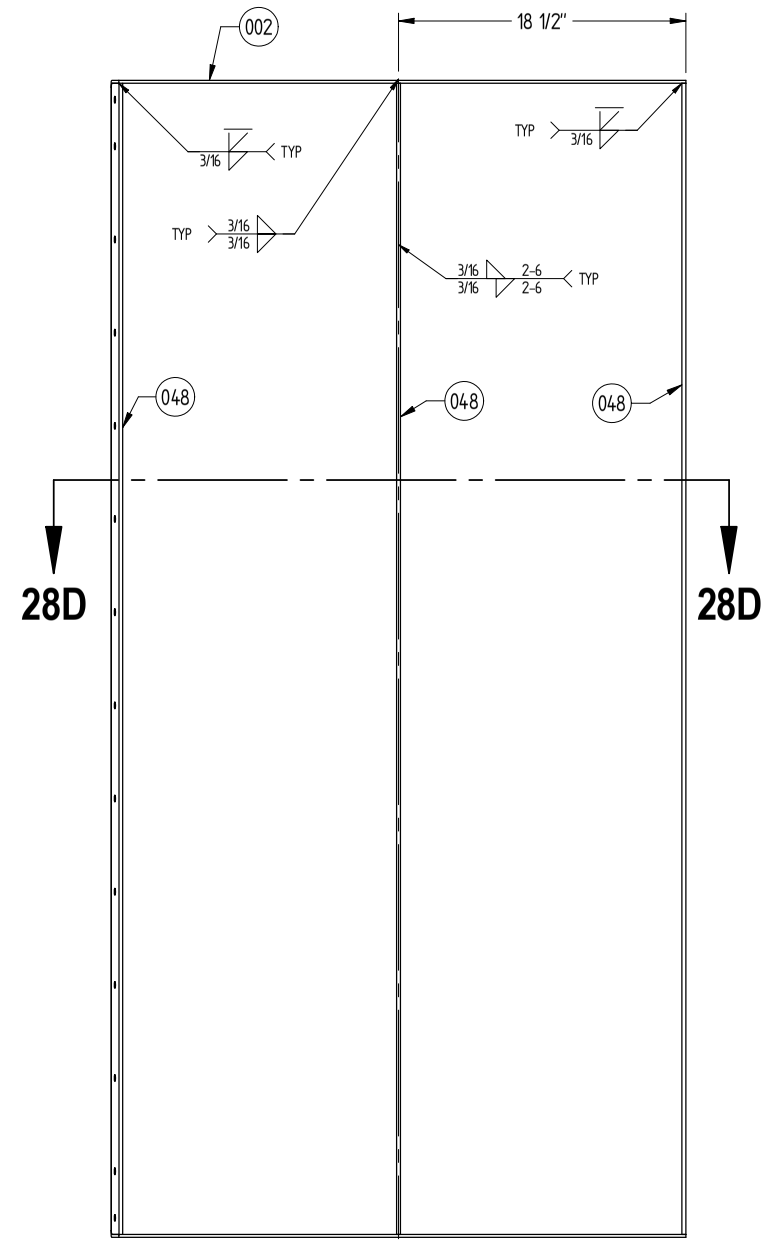

ELEVATION VIEW 28A
UPPER PANEL ASSEMBLY 02

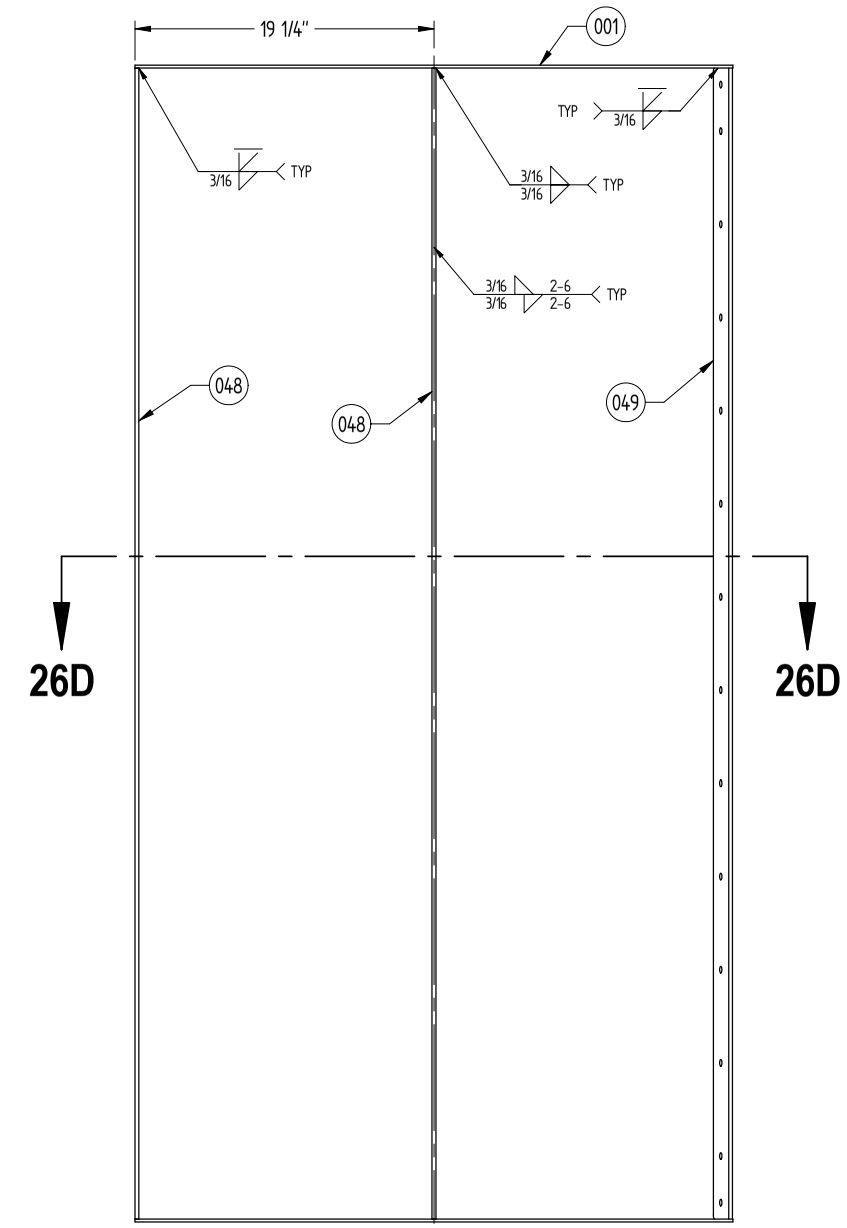

ELEVATION VIEW 26A
UPPER PANEL ASSEMBLY 01

PUGET SOUND NAVAL SHIPYARD
CODE 2370
ENGINEERING DIVISION

NO DEVIATIONS SHALL BE MADE
WITHOUT CODE 2370 APPROVAL

Unless otherwise specified, dimensions are in inches.

Decimals:
X.X = ±0.13
X.XX = ±0.025
X.XXX = ±0.003
X.XXXX = ±0.0005
Fractions = ±1/16 < 36"
Fractions = ±1/8 > 36"
Angles = ±0.5°

Drawing dimensional and geometric tolerances per ASME Y14.5M-1994

DRAWING NO.	FSR	REF #
2301-3696	2370-3696	N/A

TITLE
RAE COAMING MODIFICATIONS

SCALE: AS SHOWN | **Sheet 6 of 30** | REV. **A**

TITLE: RAE COAMING MODIFICATIONS
REV. A | SHEET 6
DWG. NO. 2301-3696

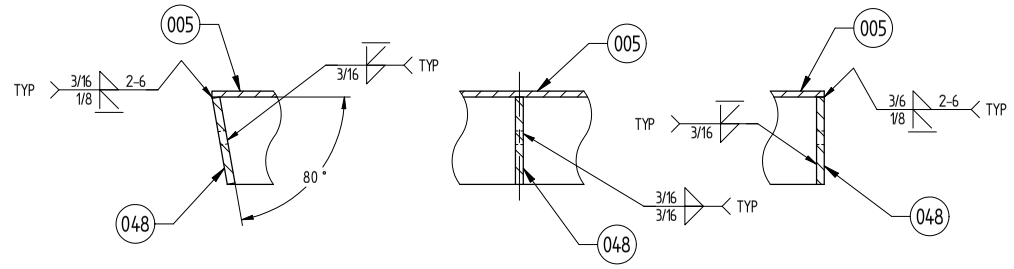

SECTION VIEW 34D (34A)
UPPER PANEL ASSEMBLY 05

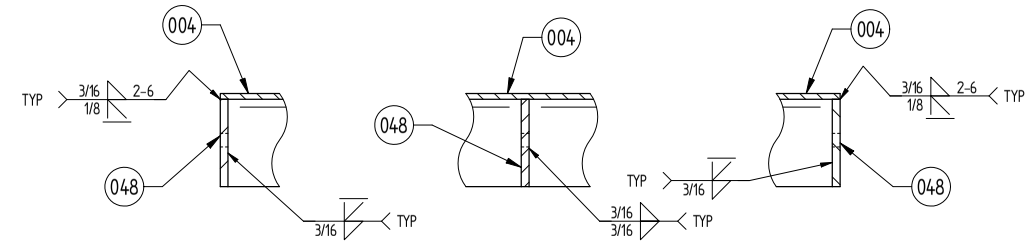

SECTION VIEW 32D (32A)
UPPER PANEL ASSEMBLY 04

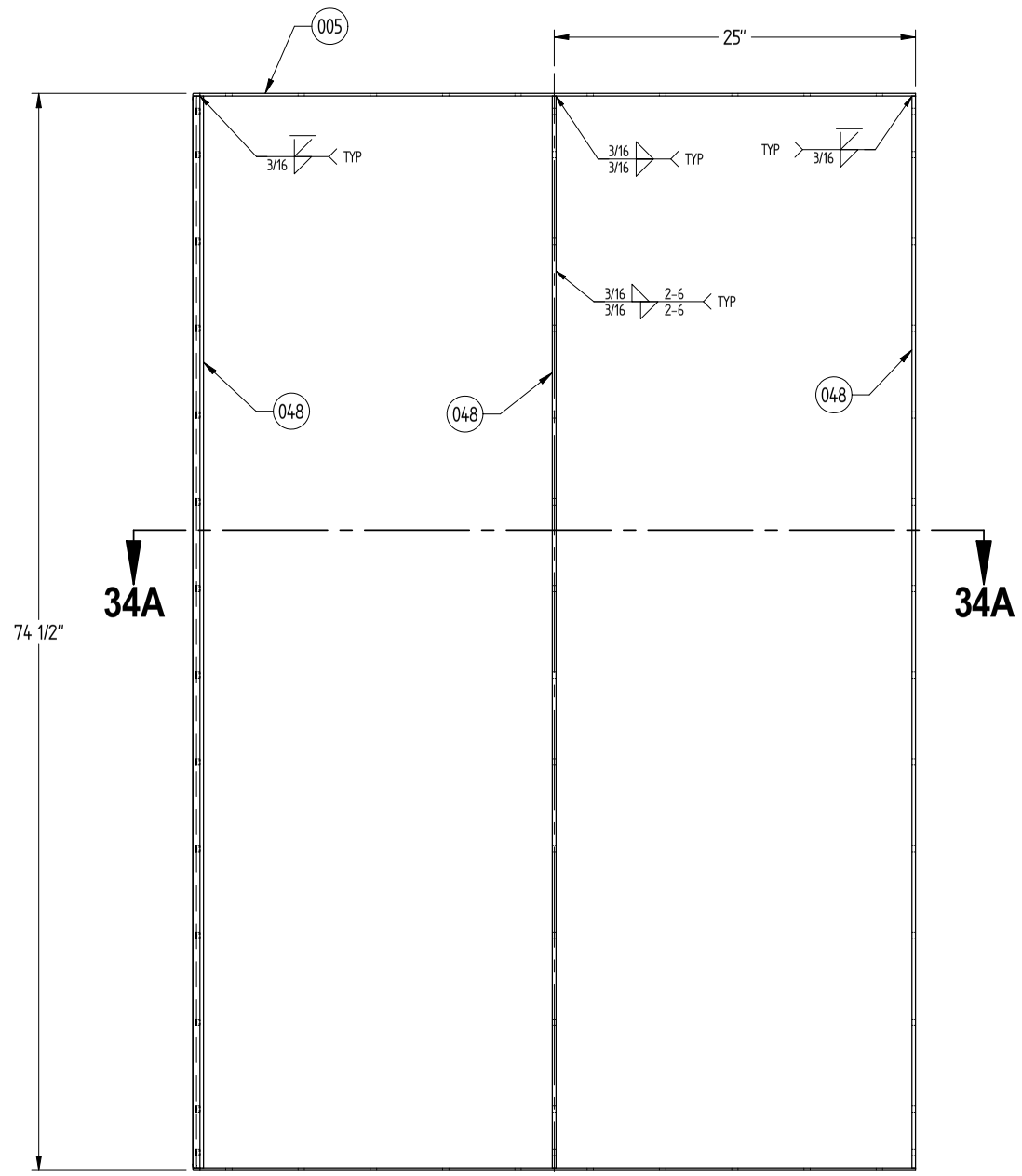

ELEVATION VIEW 34A
UPPER ASSEMBLY 05

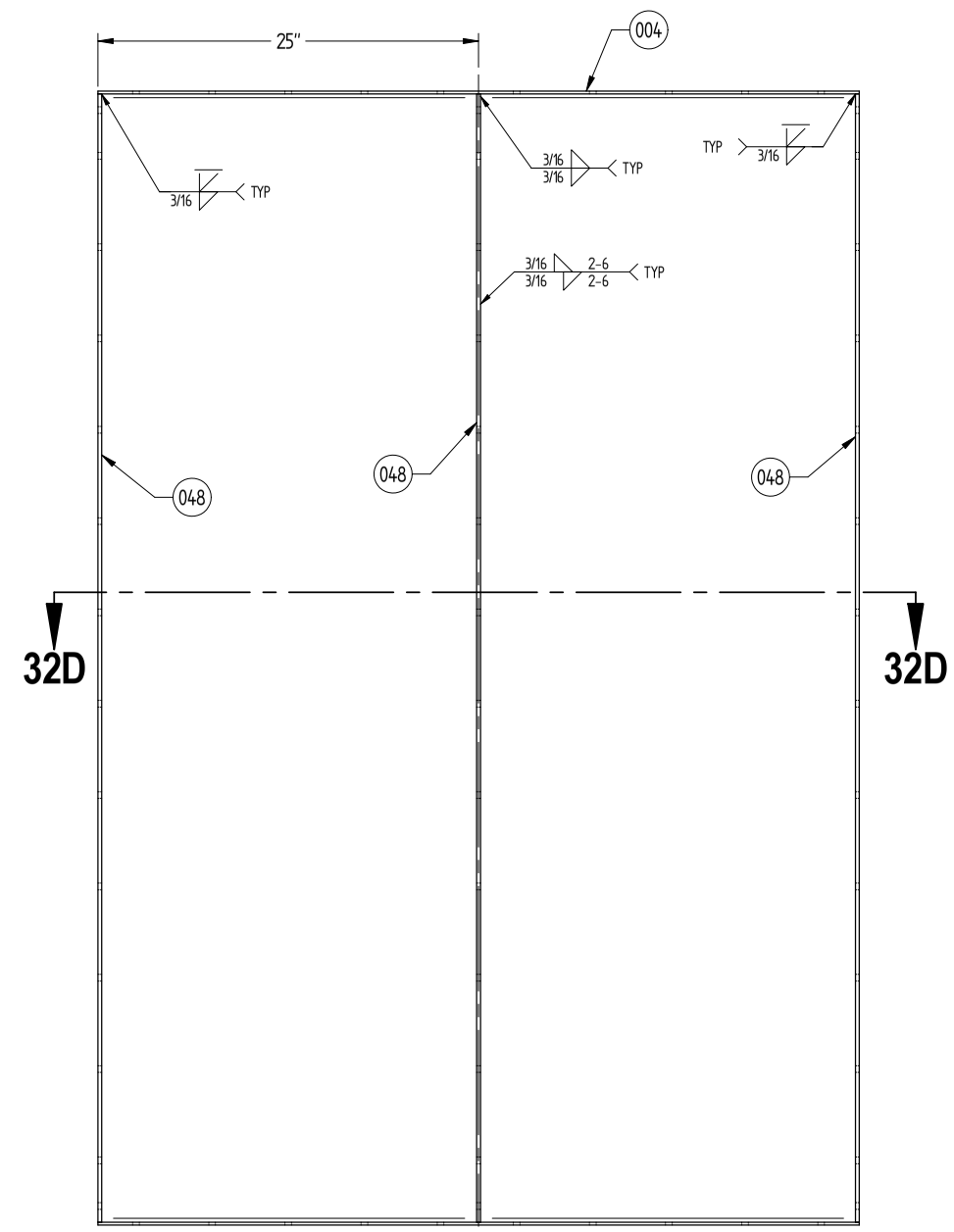

ELEVATION VIEW 32A
UPPER PANEL ASSEMBLY 04

PUGET SOUND NAVAL SHIPYARD
CODE 2370
ENGINEERING DIVISION

NO DEVIATIONS SHALL BE MADE
WITHOUT CODE 2370 APPROVAL

Unless otherwise specified, dimensions are in inches.

Decimals:
X.X = ±0.13
X.XX = ±0.025
X.XXX = ±0.003
X.XXXX = ±0.0005
Fractions = ±1/16 < 36"
Fractions = ±1/8 > 36"
Angles = ±0.5°

Drawing dimensional and geometric tolerances per: ASME Y14.5M-1994

DRAWING NO.	FSR	RF #
2301-3696	2370-3696	N/A

TITLE
RAE COAMING MODIFICATIONS

SCALE		REV.
AS SHOWN	Sheet 7 of 30	A

TITLE: RAE COAMING MODIFICATIONS
REV: A
SHEET: 7
DWG. NO. 2301-3696

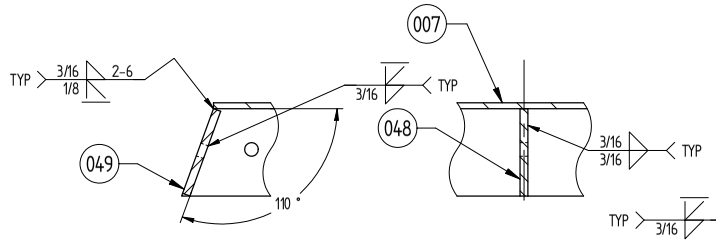

SECTION VIEW 40D (40A)
UPPER PANEL ASSEMBLY 07

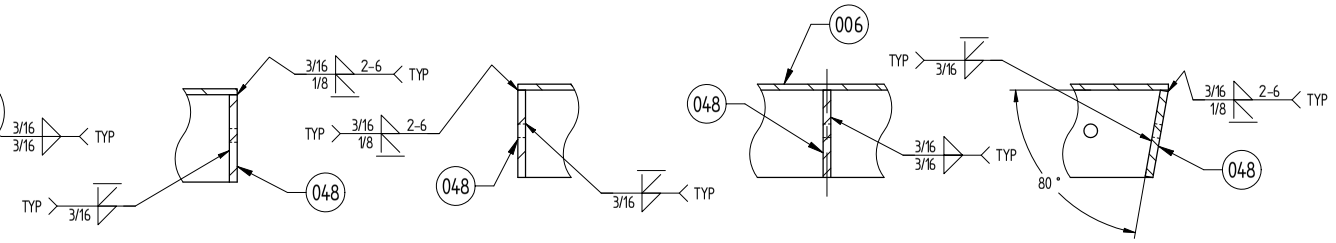

SECTION VIEW 38D (38A)
UPPER PANEL ASSEMBLY 06

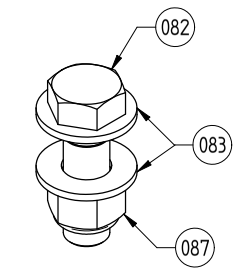

ISOMETRIC VIEW 36D
BOLT ASSEMBLY "A"

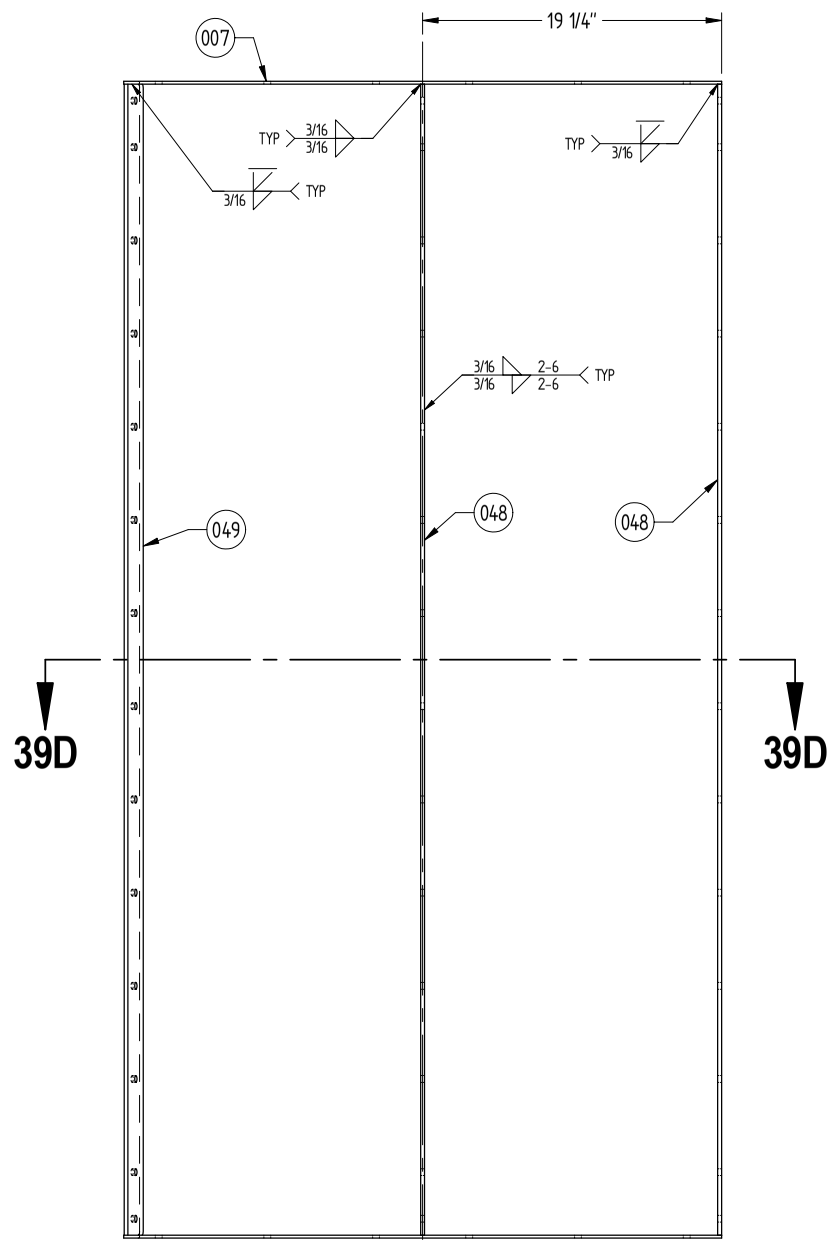

ELEVATION VIEW 40A
UPPER PANEL ASSEMBLY 07

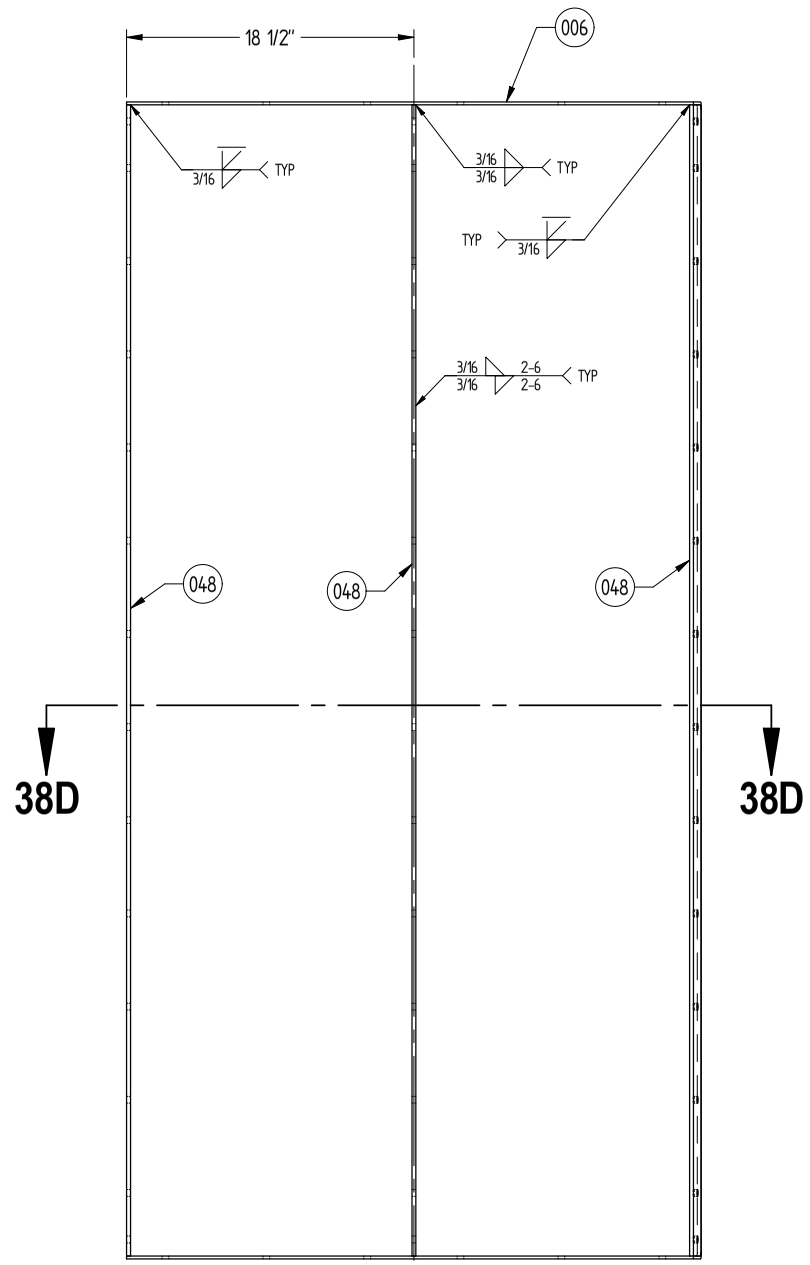

ELEVATION VIEW 38A
UPPER PANEL ASSEMBLY 06

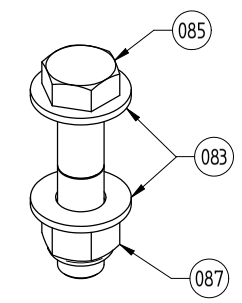

ISOMETRIC VIEW 36B
BOLT ASSEMBLY "B"

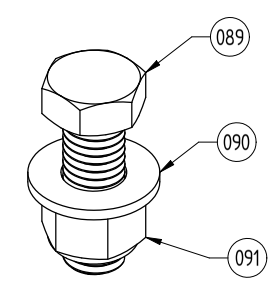

ISOMETRIC VIEW 36A
BOLT ASSEMBLY "C"

PUGET SOUND NAVAL SHIPYARD
CODE 2370
ENGINEERING DIVISION

NO DEVIATIONS SHALL BE MADE
WITHOUT CODE 2370 APPROVAL

DRAWING NO.	FSR	RF #
2301-3696	2370-3696	N/A

TITLE
RAE COAMING MODIFICATIONS

SCALE AS SHOWN | **Sheet 8 of 30** | REV. A

Unless otherwise specified, dimensions are in inches.
Decimals:
X.X = ±0.13
X.XX = ±0.025
X.XXX = ±0.003
X.XXXX = ±0.0005
Fractions = ±1/16 > 36"
Fractions = ±1/8 > 36"
Angles = ±0.5°
Drawing dimensional and geometric tolerances per ASME Y14.5M-1994

TITLE RAE COAMING MODIFICATIONS
REV. A
SHEET 8
DWG. NO. 2301-3696

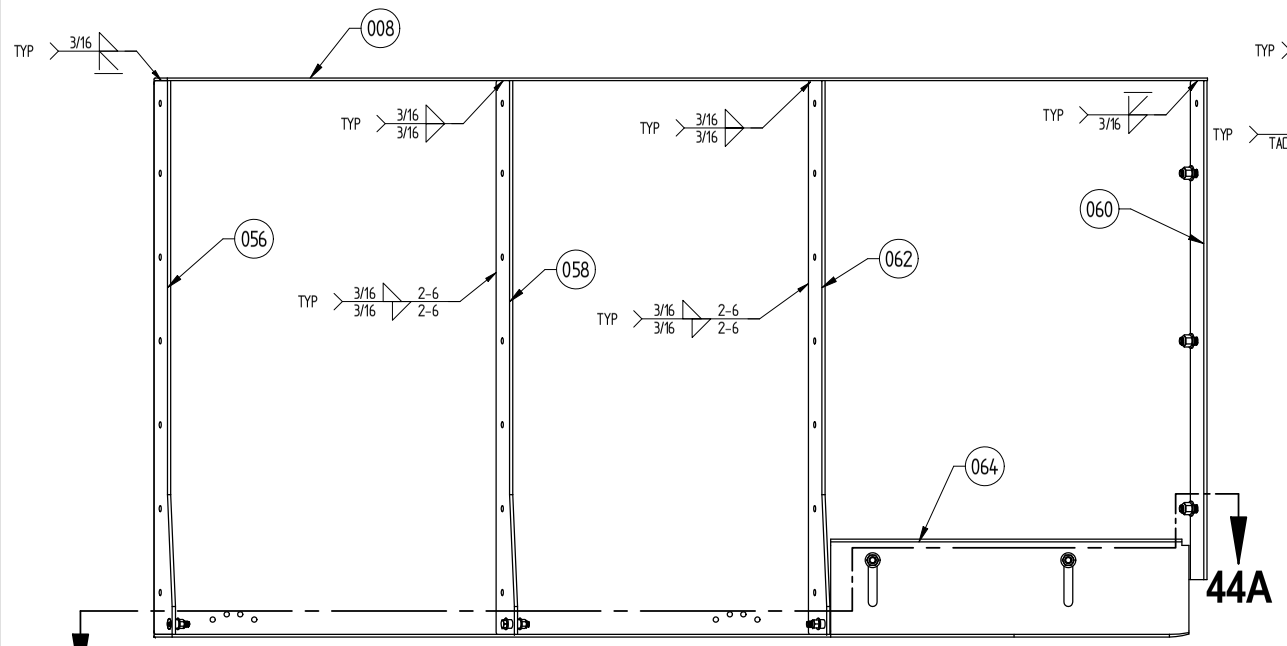

ELEVATION VIEW 44C
MID PANEL ASSEMBLY
USING PC 008

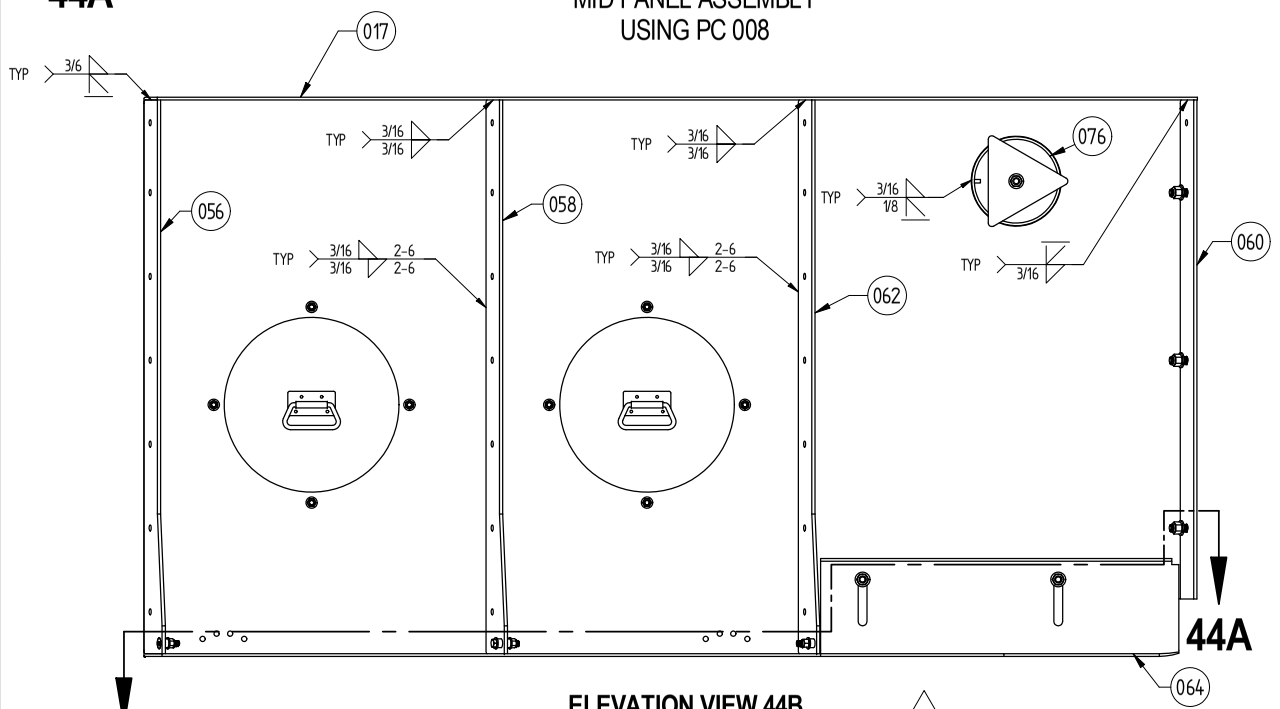

ELEVATION VIEW 44B
MID PANEL ASSEMBLY
USING 017

A

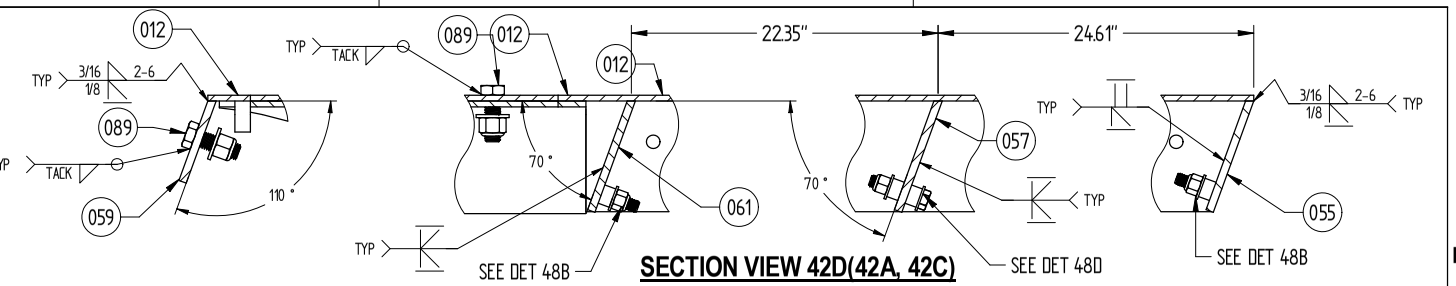

SECTION VIEW 42D(42A, 42C)
MID PANEL ASSEMBLY
USING PC 012 & PC 020

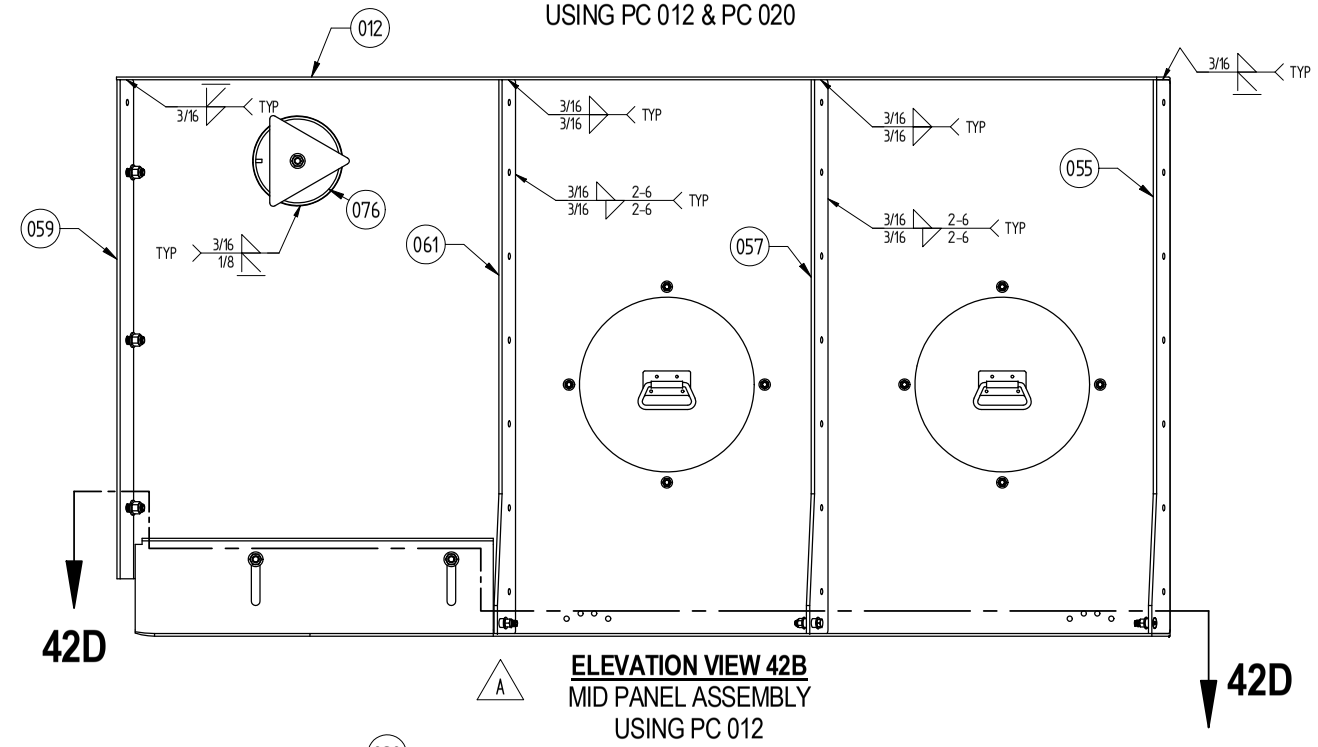

A

ELEVATION VIEW 42B
MID PANEL ASSEMBLY
USING PC 012

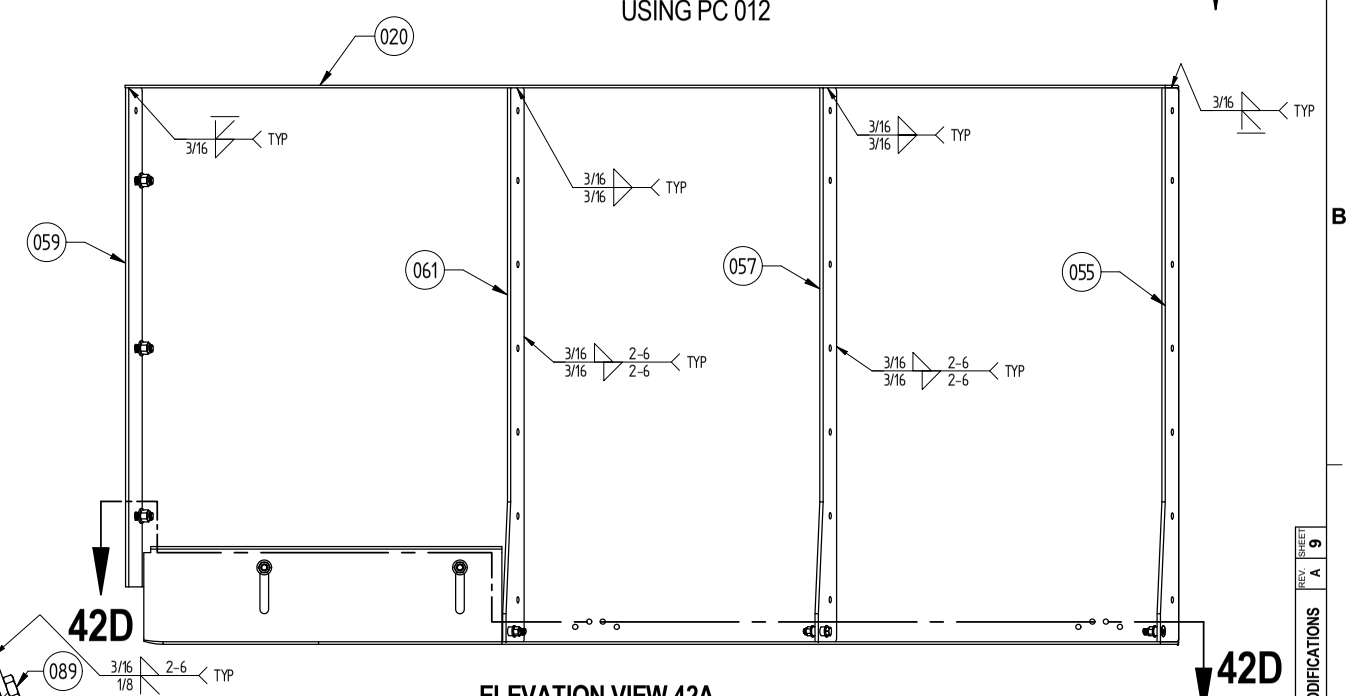

ELEVATION VIEW 42A
MID PANEL ASSEMBLY
USING PC 020

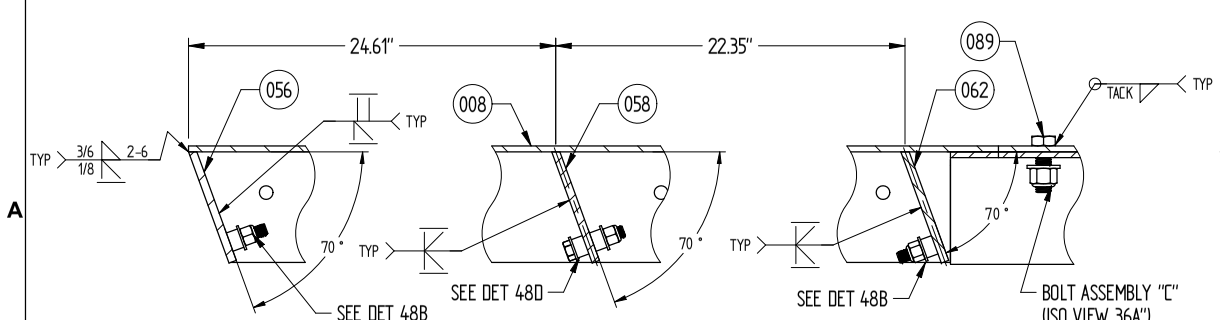

SECTION VIEW 44A(44C, 44B)
MID PANEL ASSEMBLY
USING PC008 &PC 017

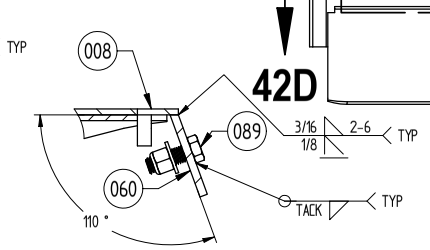

PUGET SOUND NAVAL SHIPYARD
CODE 2370
ENGINEERING DIVISION

NO DEVIATIONS SHALL BE MADE
WITHOUT CODE 2370 APPROVAL

Unless otherwise specified, dimensions are in inches.

Decimals:
X.X = ±0.13
X.XX = ±0.025
X.XXX = ±0.003
X.XXXX = ±0.0005
Fractions = ±1/16 < 36"
Fractions = ±1/8 > 36"
Angles = ±0.5°

Drawing dimensional and geometric tolerances per ASME Y14.5M-1994

DRAWING NO.	FSR	RF#
2301-3696	2370-3696	N/A

TITLE
RAE COAMING MODIFICATIONS

SCALE		REV.
AS SHOWN	Sheet 9 of 30	A

DWG. NO. 2301-3696 | TITLE RAE COAMING MODIFICATIONS | REV. A | SHEET 9

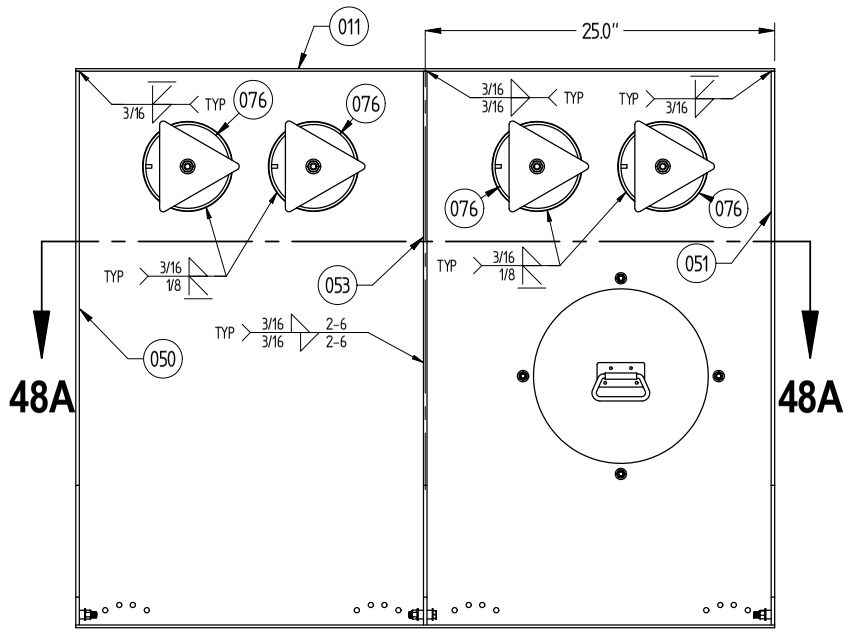

ELEVATION VIEW 50C
MID PANEL ASSEMBLY (PC 011)

A

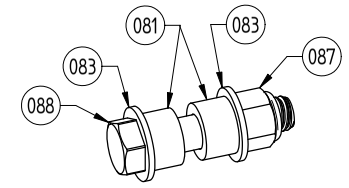

DETAIL VIEW 48D
PLATFORM PANEL
MID ATTACHMENT ASSEMBLY

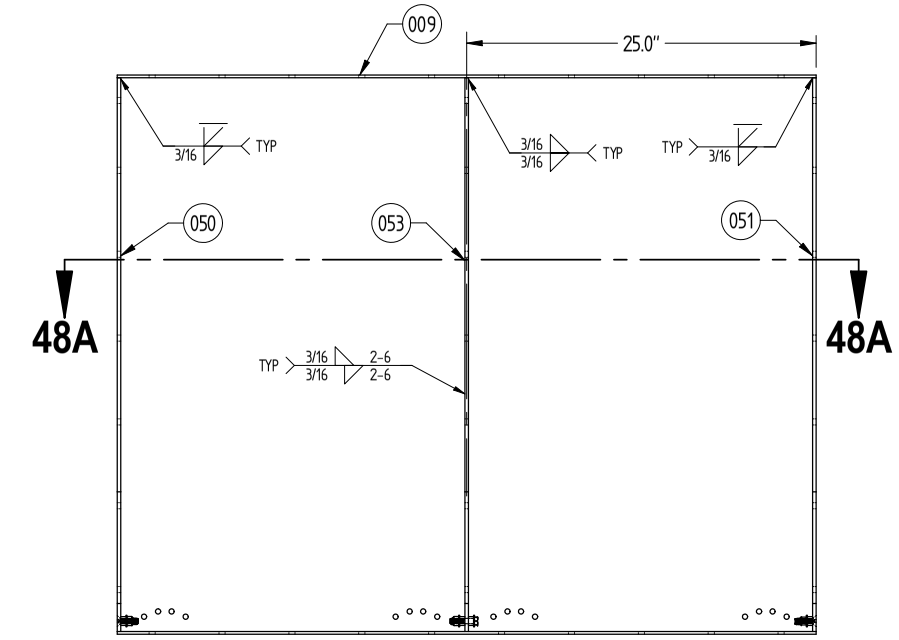

ELEVATION VIEW 46C
MID PANEL ASSEMBLY (PC 009)

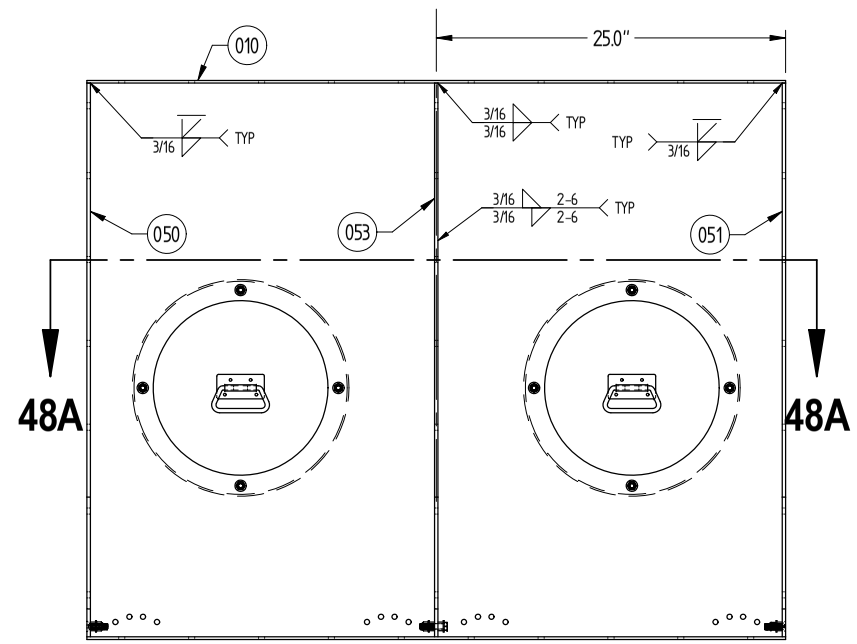

ELEVATION VIEW 48B
MID PANEL ASSEMBLY (PC 010)

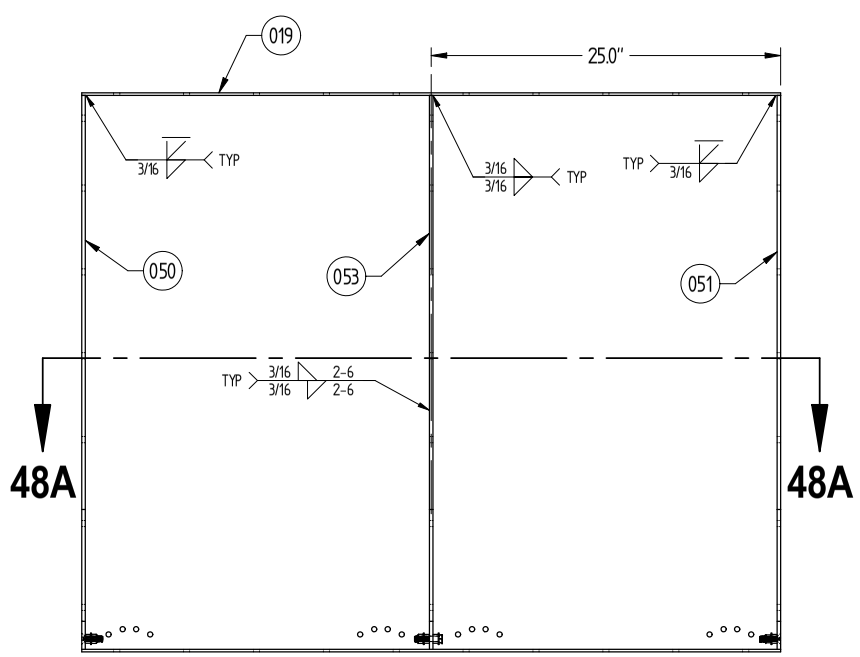

ELEVATION VIEW 50A
MID PANEL ASSEMBLY (PC 019)

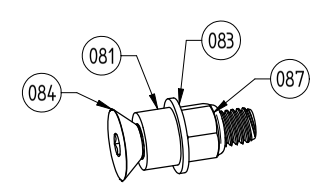

DETAIL VIEW 48B
PLATFORM PANEL
OUTER ATTACHMENT ASSEMBLY

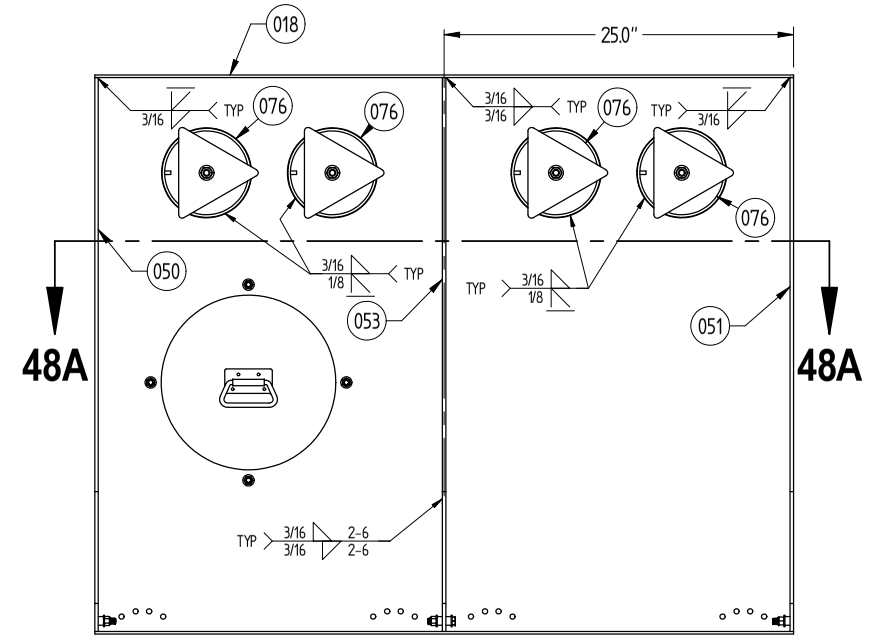

ELEVATION VIEW 46A
MID PANEL ASSEMBLY (PC 018)

A

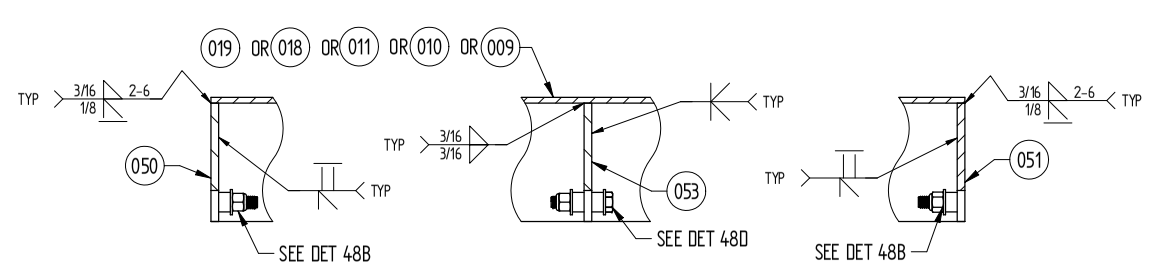

SECTION VIEW 48A (46A, 46C, 48B, 50A, 50C)
MID PANEL ASSEMBLY 9, 11, 18, & 19

PUGET SOUND NAVAL SHIPYARD
CODE 2370
ENGINEERING DIVISION

NO DEVIATIONS SHALL BE MADE
WITHOUT CODE 2370 APPROVAL

Unless otherwise specified, dimensions are in inches.
Decimals:
X.X = ±0.13
X.XX = ±0.025
X.XXX = ±0.003
X.XXXX = ±0.0005
Fractions = ±1/16 < 36"
Fractions = ±1/8 > 36"
Angles = ±0.5°
Drawing dimensional and geometric tolerances per ASME Y14.5M-1994

DRAWING NO.	FSR	RF#
2301-3696	2370-3696	N/A

TITLE
RAE COAMING MODIFICATIONS

SCALE		REV.
AS SHOWN	Sheet 10 of 30	A

TITLE: RAE COAMING MODIFICATIONS
REV: A
SHEET: 10
DWG. NO.: 2301-3696

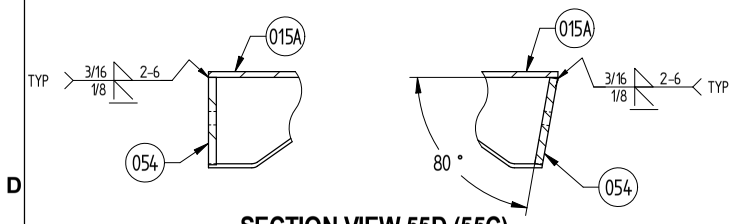

SECTION VIEW 55D (55C)

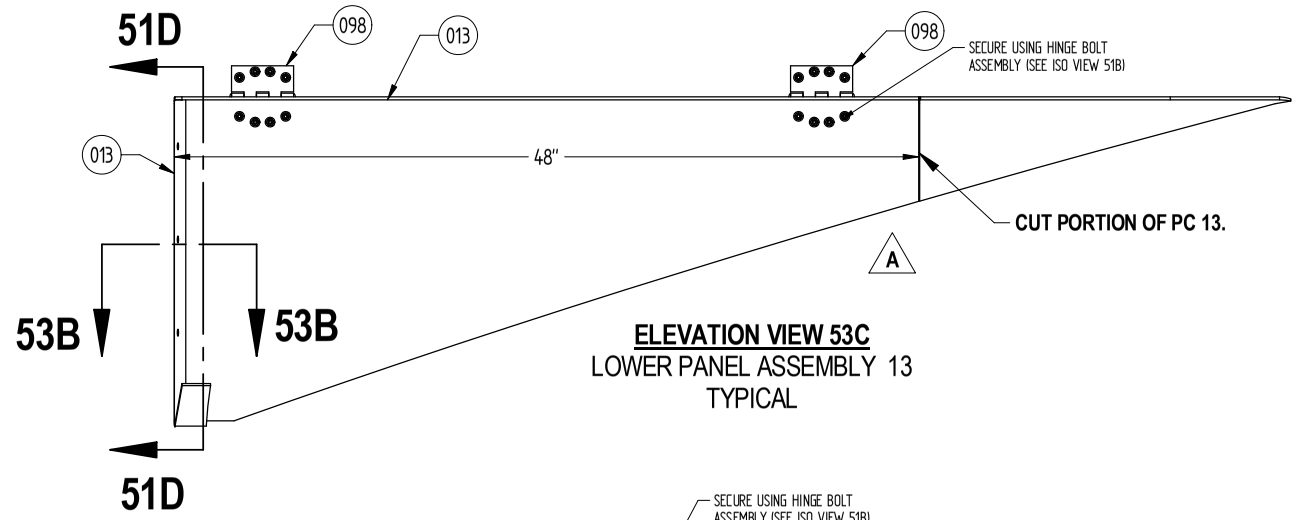

ELEVATION VIEW 53C
LOWER PANEL ASSEMBLY 13
TYPICAL

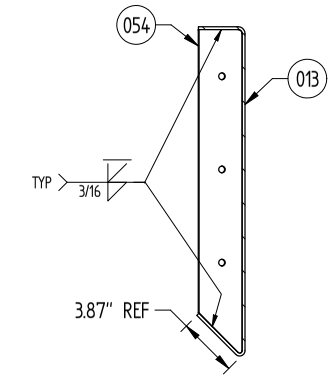

SECTION VIEW 51D (53C)

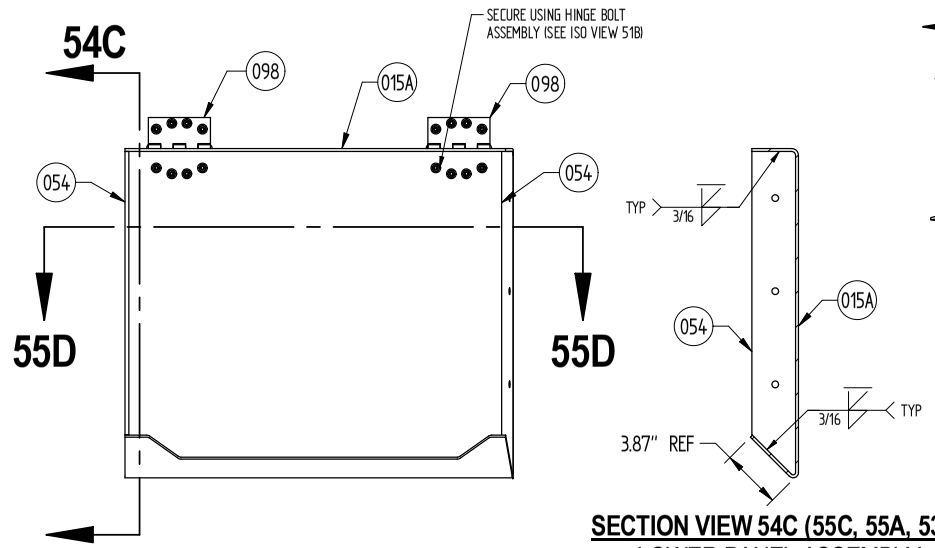

BOTTOM VIEW 55C
LOWER PANEL ASSEMBLY 15A

SECTION VIEW 54C (55C, 55A, 53A)
LOWER PANEL ASSEMBLY
TYPICAL

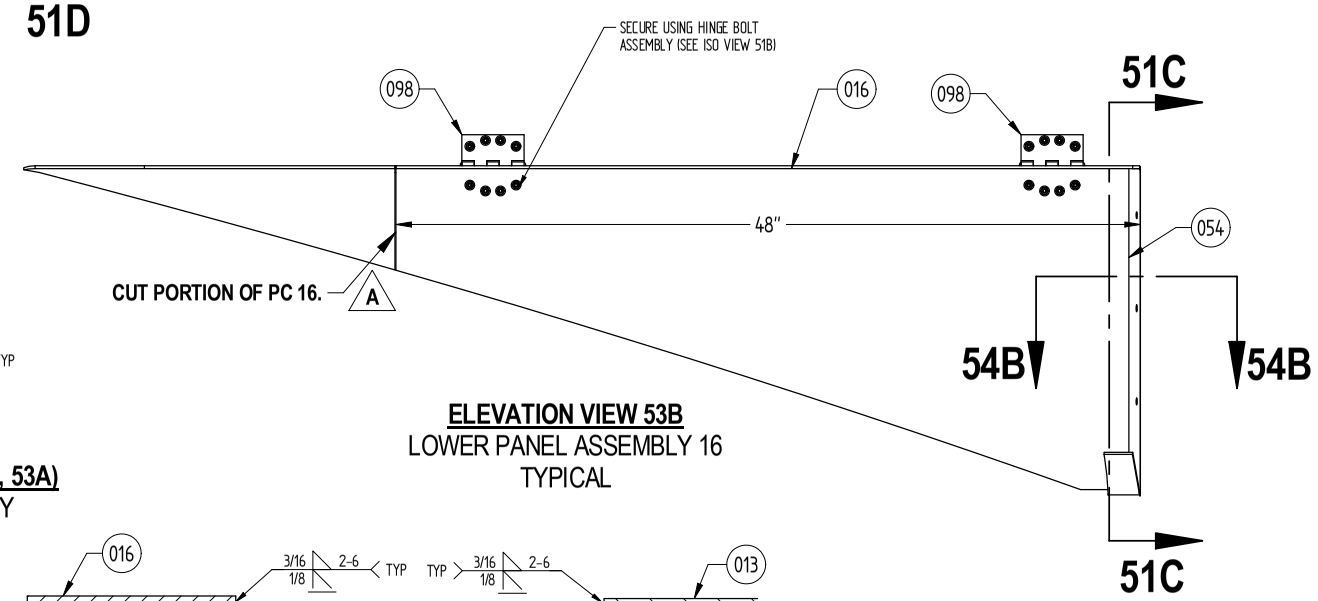

ELEVATION VIEW 53B
LOWER PANEL ASSEMBLY 16
TYPICAL

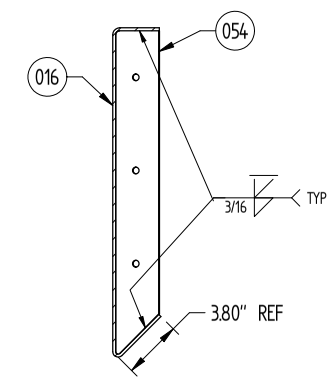

SECTION VIEW 51C (53B)

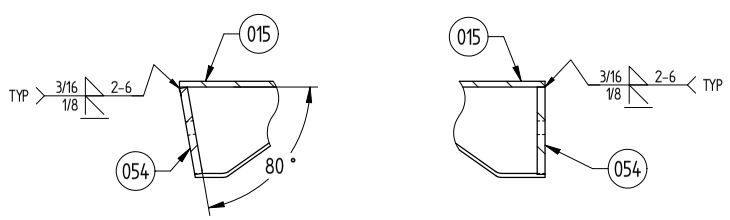

SECTION VIEW 55B (55A)

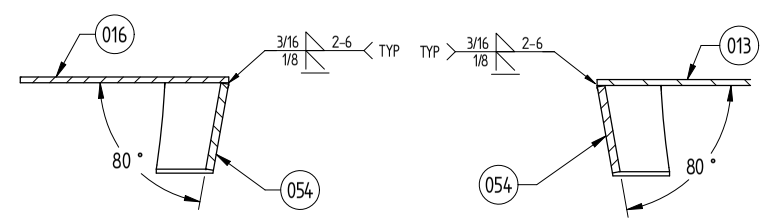

SECTION VIEW 54B (53B)

SECTION VIEW 53B (53C)

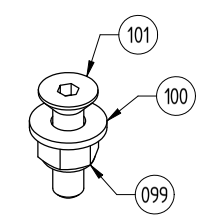

ISOMETRIC VIEW 51B
HINGE BOLT ASSEMBLY

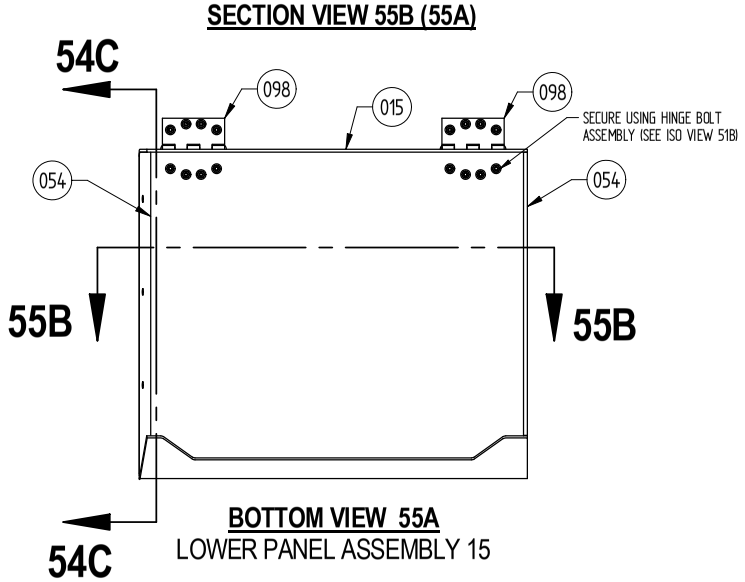

BOTTOM VIEW 55A
LOWER PANEL ASSEMBLY 15

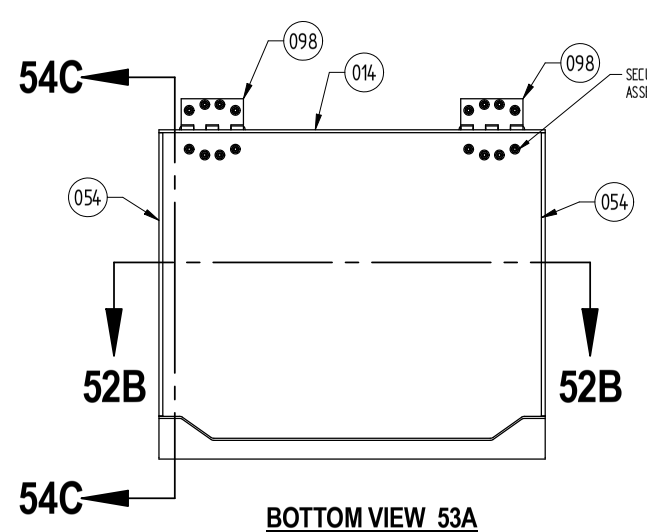

BOTTOM VIEW 53A
LOWER PANEL ASSEMBLY 14

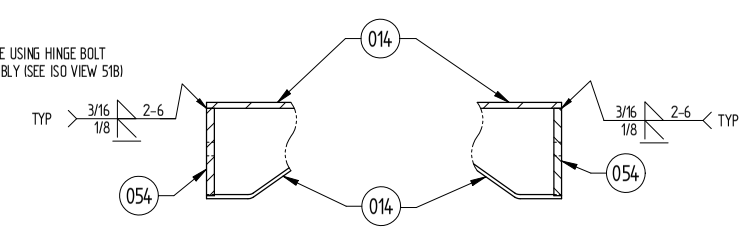

SECTION VIEW 52B (53A)

PUGET SOUND NAVAL SHIPYARD
CODE 2370
ENGINEERING DIVISION

NO DEVIATIONS SHALL BE MADE WITHOUT CODE 2370 APPROVAL

Unless otherwise specified, dimensions are in inches.
Decimals:
X.X = ±0.13
X.XX = ±0.025
X.XXX = ±0.003
X.XXXX = ±0.0005
Fractions = ±1/16 < 36"
Fractions = ±1/8 > 36"
Angles = ±0.5°
Drawing dimensional and geometric tolerances per ASME Y14.5M-1994

DRAWING NO.	FSR	REF #
2301-3696	2370-3696	N/A

TITLE
RAE COAMING MODIFICATIONS

SCALE		REV.
AS SHOWN	Sheet 11 of 30	A

DWG. NO. 2301-3696 | TITLE RAE COAMING MODIFICATIONS | REV. A | SHEET 11

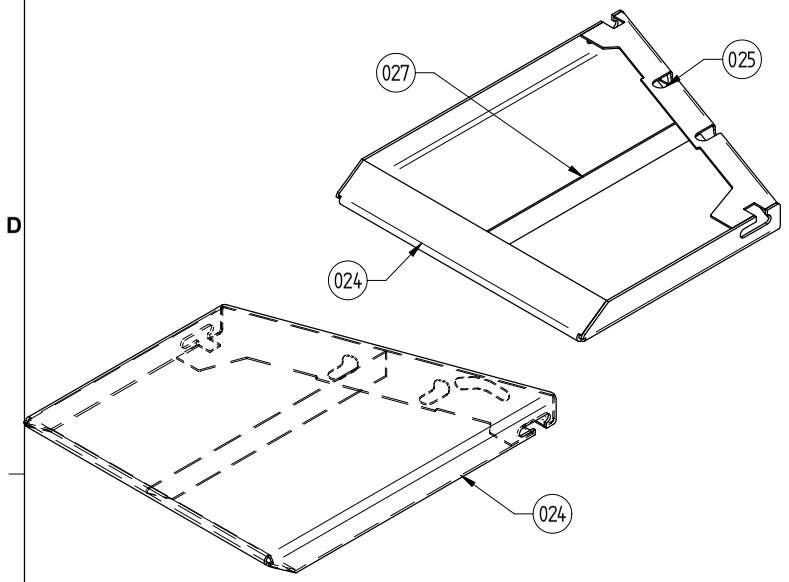

ISOMETRIC VIEW 60C
PLATFORM PANEL ASSEMBLY "B"
PORT AFT & STBD FWD SHOWN
PORT FWD & STBD AFT - OPPOSITE HAND

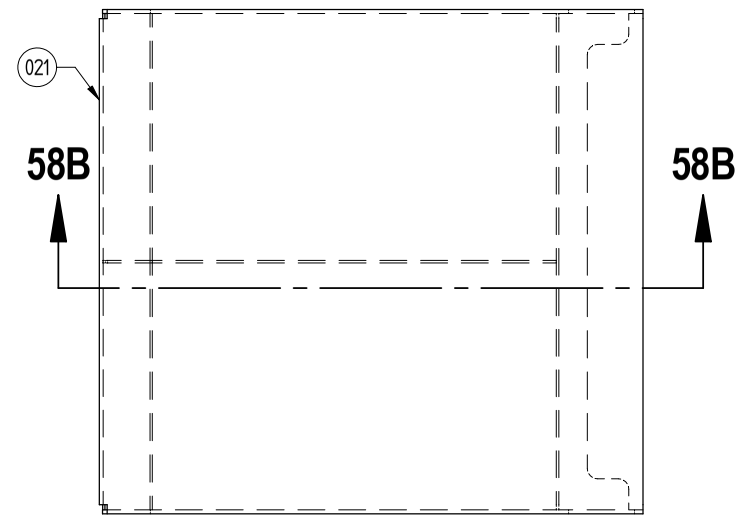

TOP VIEW 58C
PLATFORM PANEL ASSEMBLY "A"
PORT & STBD

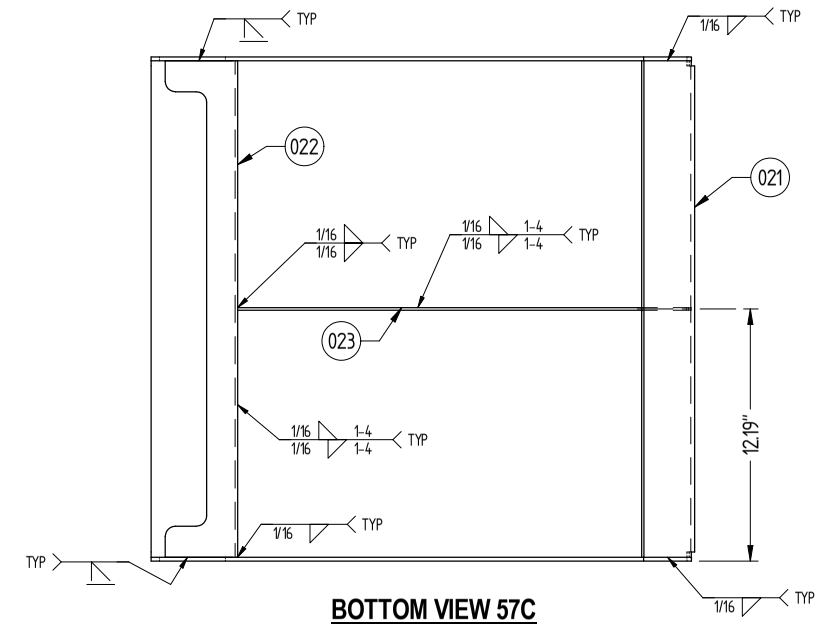

BOTTOM VIEW 57C
PLATFORM PANEL ASSEMBLY "A"
PORT & STBD

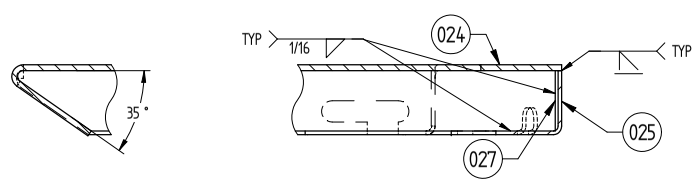

SECTION VIEW 60B (60A)

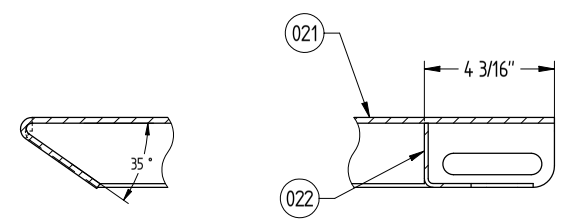

SECTION VIEW 58B (58C)

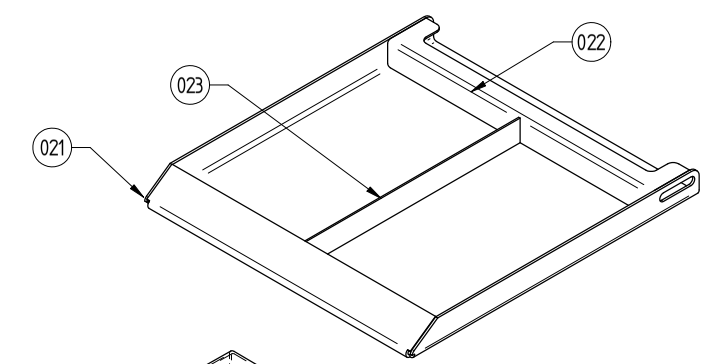

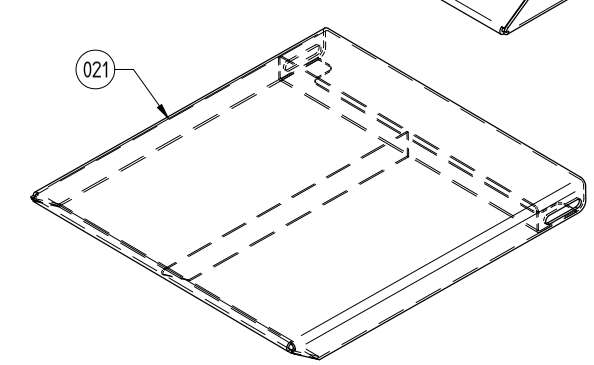

ISOMETRIC VIEW 56A
PLATFORM PANEL ASSEMBLY "A"
TOP AND BOTTOM

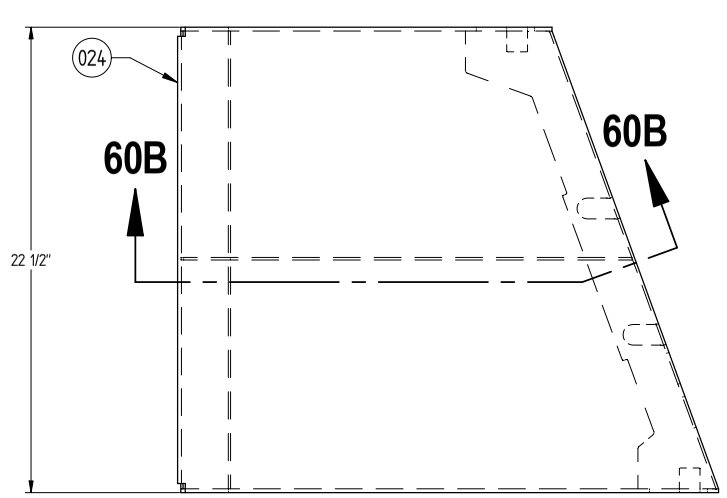

TOP VIEW 60A
PLATFORM PANEL ASSEMBLY "B"
PORT FWD & STBD AFT SHOWN
PORT AFT & STBD FWD OPPOSITE HAND

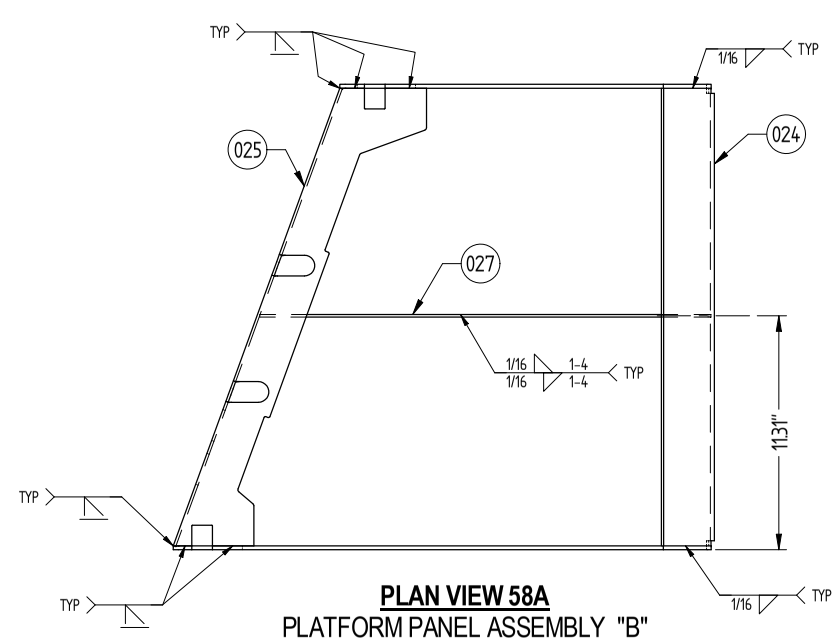

PLAN VIEW 58A
PLATFORM PANEL ASSEMBLY "B"
PORT FWD & STBD AFT SHOWN
PORT AFT & STBD FWD OPPOSITE HAND

PUGET SOUND NAVAL SHIPYARD
CODE 2370
ENGINEERING DIVISION

NO DEVIATIONS SHALL BE MADE
WITHOUT CODE 2370 APPROVAL

Unless otherwise specified, dimensions are in inches.
Decimals:
X.X = ±0.13
X.XX = ±0.025
X.XXX = ±0.003
X.XXXX = ±0.0005
Fractions = ±1/16 < 36"
Fractions = ±1/8 > 36"
Angles = ±0.5°
Drawing dimensional and geometric tolerances per ASME Y14.5M-1994

DRAWING NO.	FSR	R/F #
2301-3696	2370-3696	N/A

TITLE
RAE COAMING MODIFICATIONS

SCALE AS SHOWN | **Sheet 12 of 30** | REV. A

DWG. NO. 2301-3696 TITLE RAE COAMING MODIFICATIONS REV. A SHEET 12

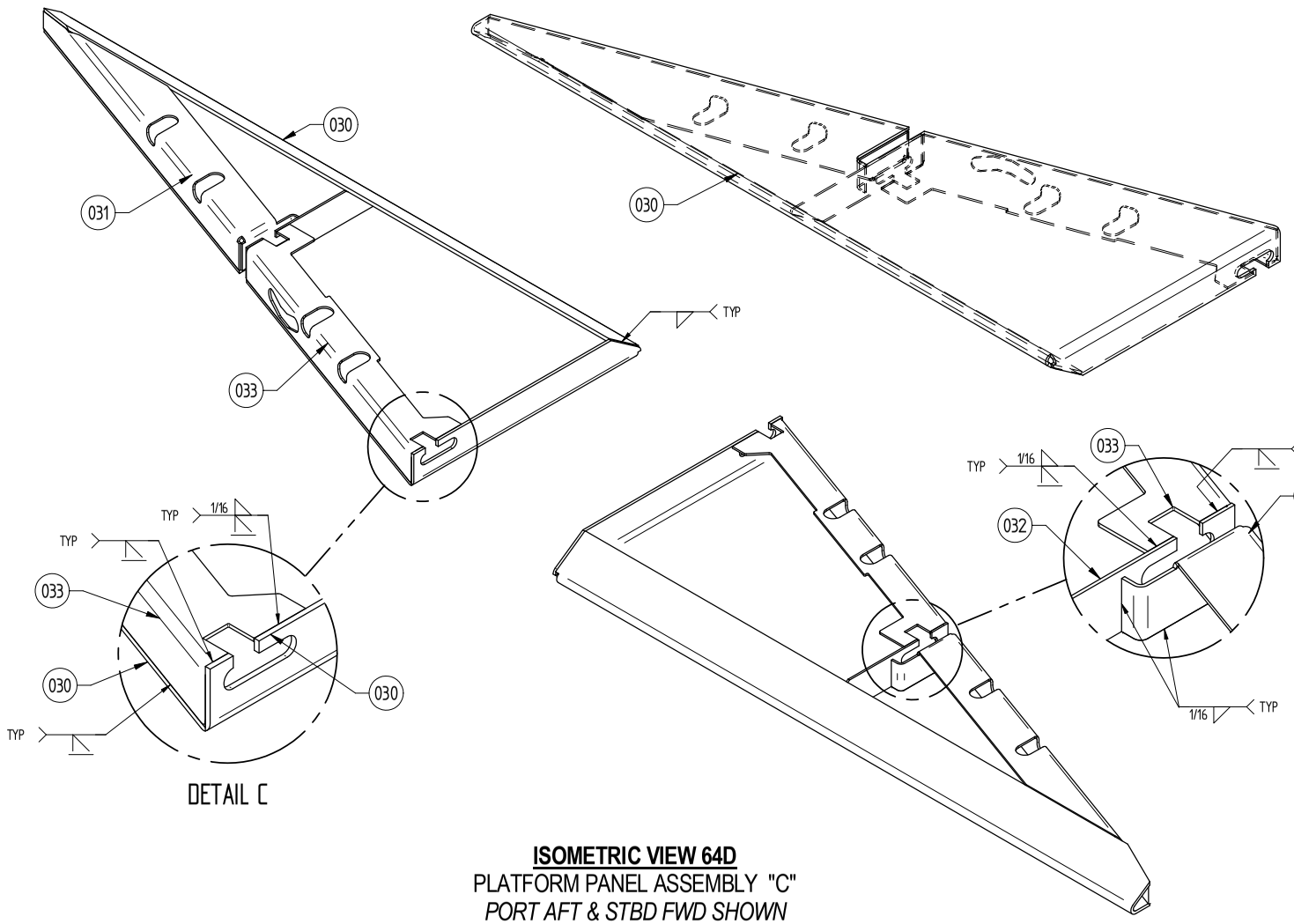

ISOMETRIC VIEW 64D
PLATFORM PANEL ASSEMBLY "C"
PORT AFT & STBD FWD SHOWN

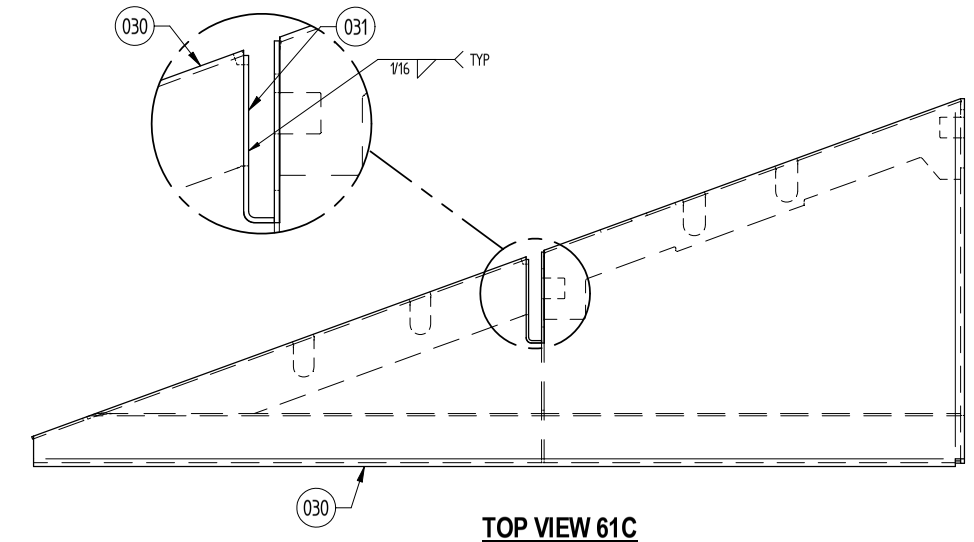

TOP VIEW 61C
PLATFORM PANEL ASSEMBLY "C"
PORT AFT & STBD FWD SHOWN
PORT FWD & STBD AFT - OPPOSITE HAND

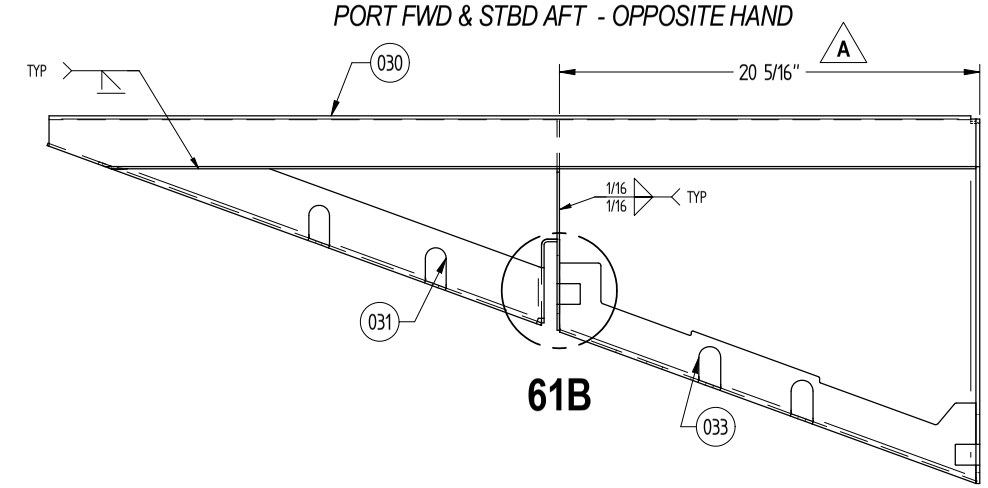

BOTTOM VIEW 61B
PLATFORM PANEL ASSEMBLY "C"
PORT AFT & STBD FWD SHOWN
PORT FWD & STBD AFT - OPPOSITE HAND

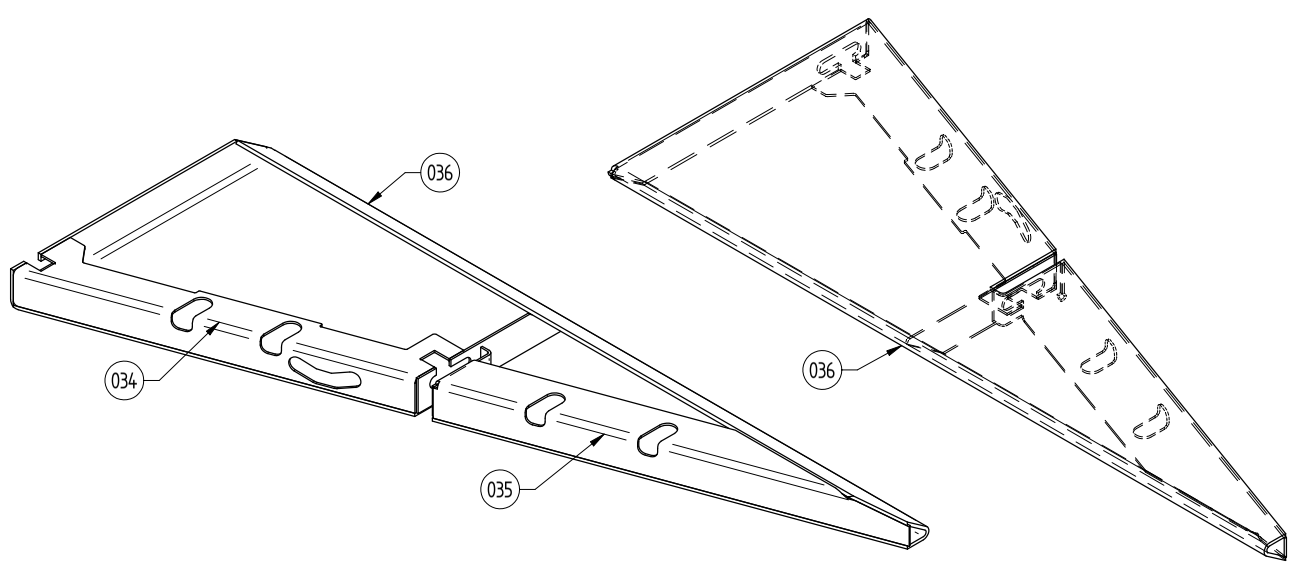

ISOMETRIC VIEW 64A
PLATFORM PANEL ASSEMBLY "C"
PORT FWD & STBD AFT SHOWN

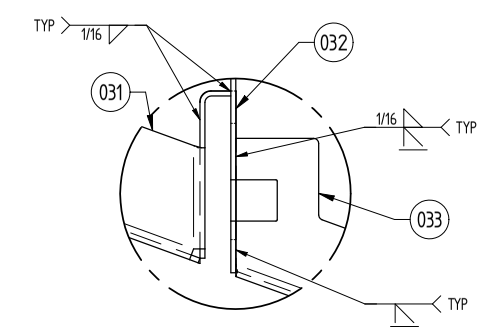

DETAIL VIEW 61B (71C)

PUGET SOUND NAVAL SHIPYARD
CODE 2370
ENGINEERING DIVISION

NO DEVIATIONS SHALL BE MADE
WITHOUT CODE 2370 APPROVAL

Unless otherwise specified, dimensions are in inches.
Decimals:
X.X = ±0.13
X.XX = ±0.025
X.XXX = ±0.003
X.XXXX = ±0.0005
Fractions = ±1/16 < 36"
Fractions = ±1/8 > 36"
Angles = ±0.5°
Drawing dimensional and geometric tolerances per ASME Y14.5M-1994

DRAWING NO.	FSR	REF #
2301-3696	2370-3696	N/A

TITLE
RAE COAMING MODIFICATIONS

SCALE AS SHOWN | **Sheet 13 of 30** | REV. **A**

DWG. NO. 2301-3696 | TITLE RAE COAMING MODIFICATIONS | REV. A | SHEET 13

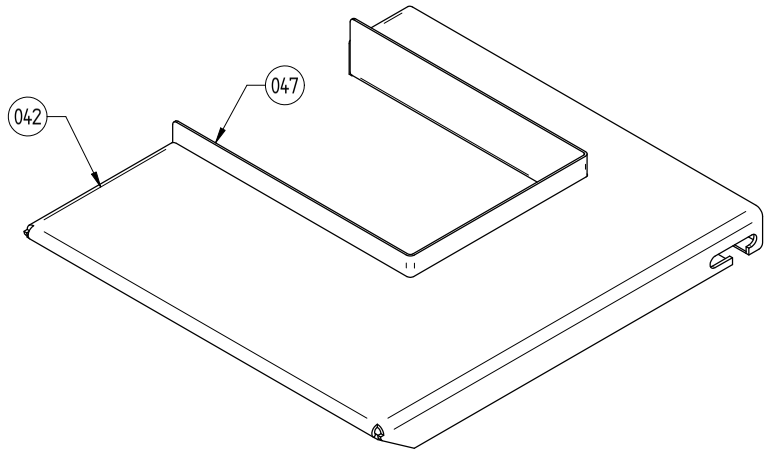

ISOMETRIC VIEW 70C
PLATFORM PANEL ASSEMBLY "E"
STBD AFT - SHOWN
PORT AFT - OPPOSITE HAND

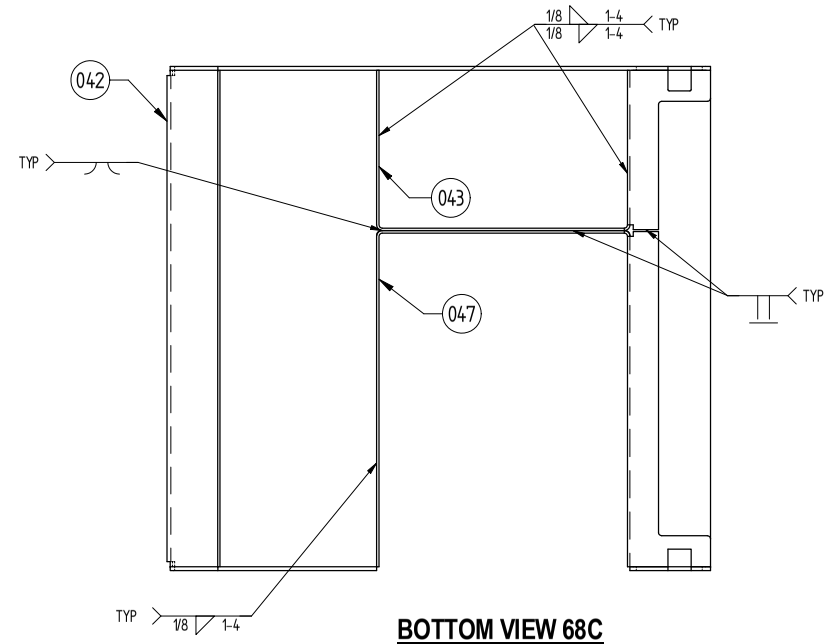

BOTTOM VIEW 68C
PLATFORM PANEL ASSEMBLY "E"
STBD AFT - SHOWN
PORT AFT - OPPOSITE HAND

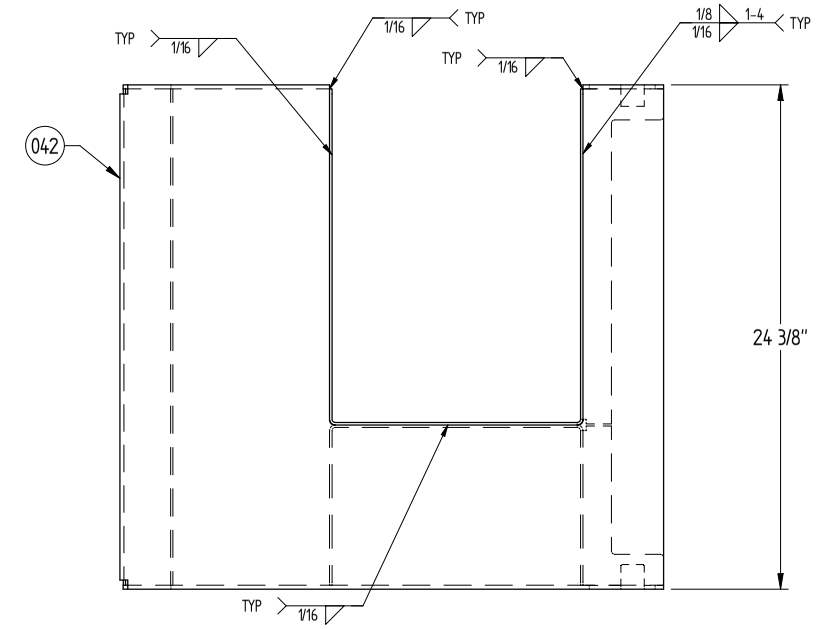

TOP VIEW 66C
PLATFORM PANEL ASSEMBLY "E"
STBD AFT - SHOWN
PORT AFT - OPPOSITE HAND

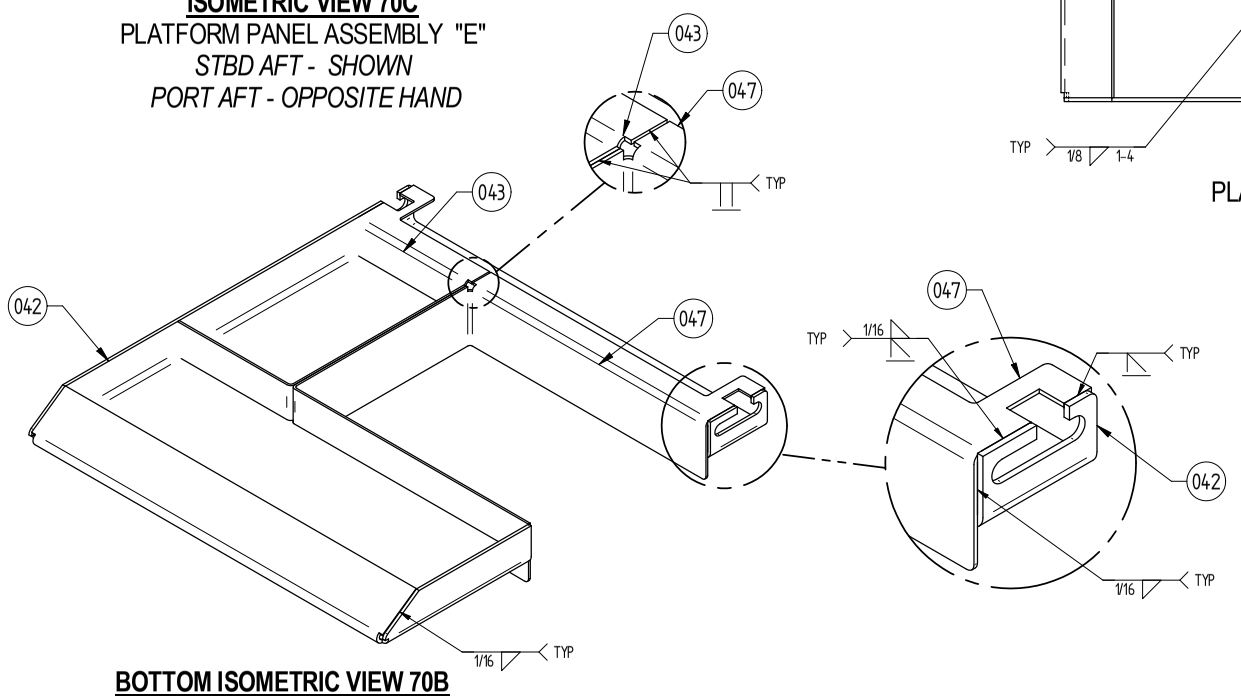

BOTTOM ISOMETRIC VIEW 70B
PLATFORM PANEL ASSEMBLY "E"
STBD AFT - SHOWN
PORT AFT - OPPOSITE HAND

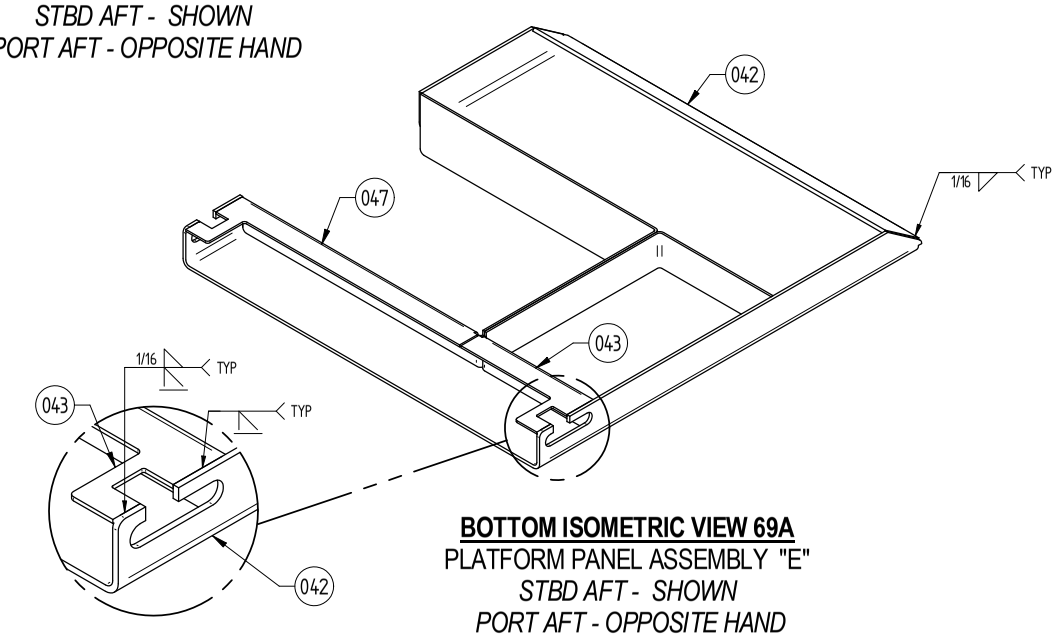

BOTTOM ISOMETRIC VIEW 69A
PLATFORM PANEL ASSEMBLY "E"
STBD AFT - SHOWN
PORT AFT - OPPOSITE HAND

PUGET SOUND NAVAL SHIPYARD
CODE 2370
ENGINEERING DIVISION

NO DEVIATIONS SHALL BE MADE
WITHOUT CODE 2370 APPROVAL

Unless otherwise specified, dimensions are in inches.
Decimals:
X.X = ±0.13
X.XX = ±0.025
X.XXX = ±0.003
X.XXXX = ±0.0005
Fractions = ±1/16 < 36"
Fractions = ±1/8 > 36"
Angles = ±0.5°
Drawing dimensional and geometric tolerances per ASME Y14.5M-1994

DRAWING NO.	FSR	REF #
2301-3696	2370-3696	N/A

TITLE
RAE COAMING MODIFICATIONS

SCALE		REV.
AS SHOWN	Sheet 14 of 30	A

TITLE: RAE COAMING MODIFICATIONS
REV: A
SHEET: 14
DWG. NO. 2301-3696

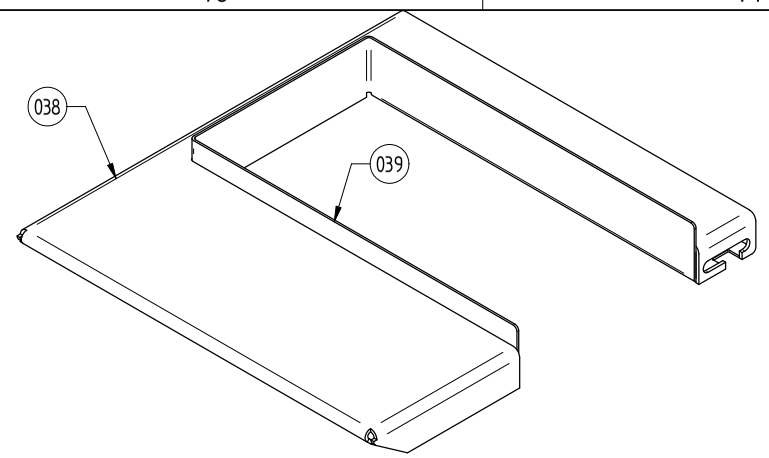

ISOMETRIC VIEW 75D
PLATFORM PANEL ASSEMBLY "D"
STBD AFT - SHOWN
PORT AFT - OPPOSITE HAND

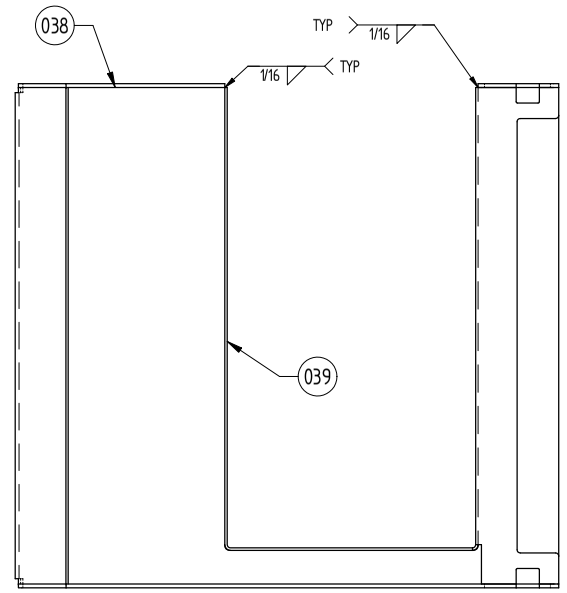

BOTTOM VIEW 73C
PLATFORM PANEL ASSEMBLY "D"
STBD AFT - SHOWN
PORT AFT - OPPOSITE HAND

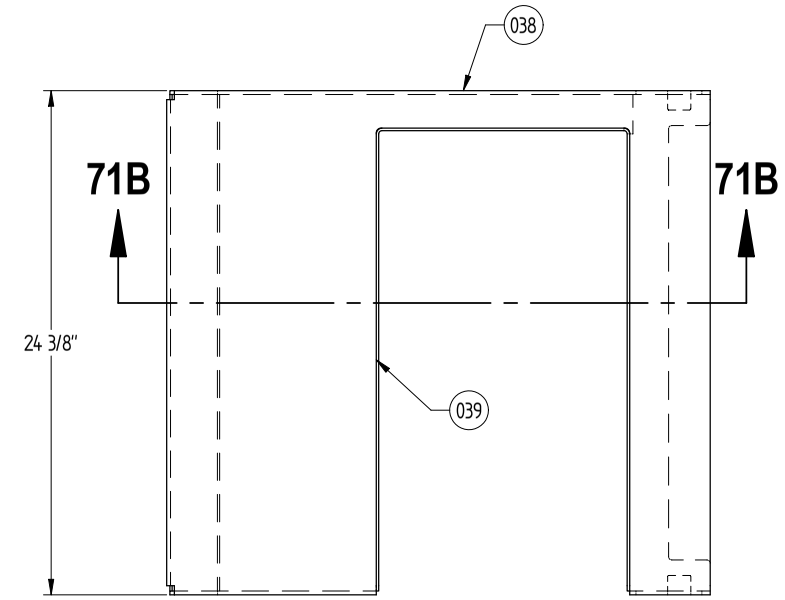

TOP VIEW VIEW 71C
PLATFORM PANEL ASSEMBLY "D"
STBD AFT - SHOWN
PORT AFT - OPPOSITE HAND

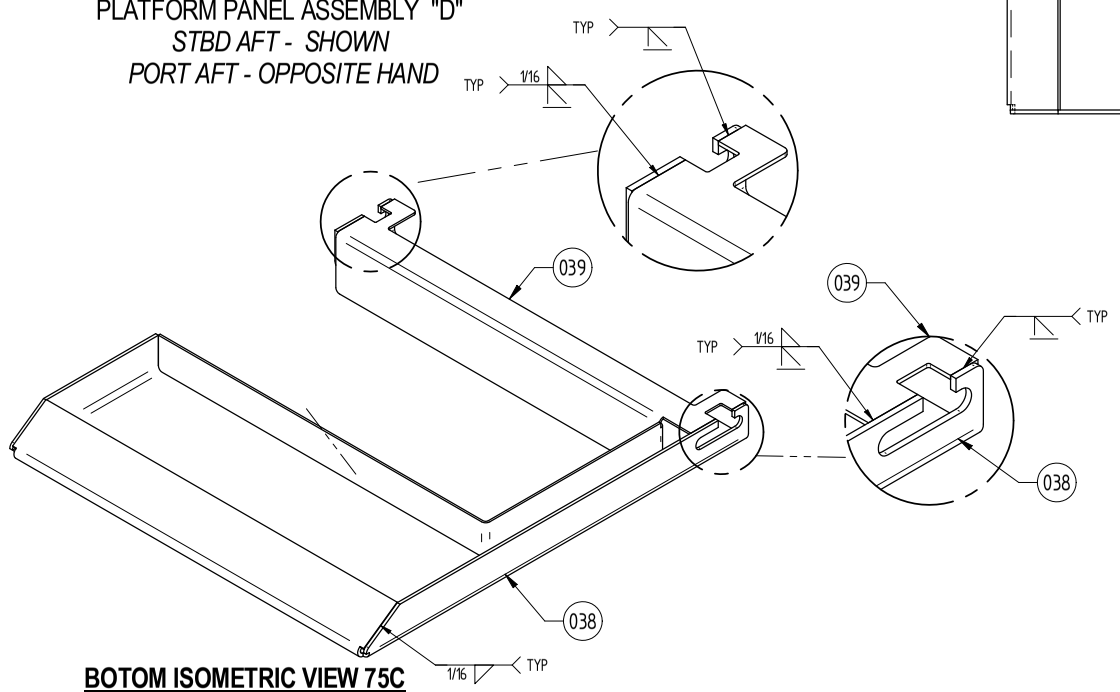

BOTOM ISOMETRIC VIEW 75C
PLATFORM PANEL ASSEMBLY "D"
STBD AFT - SHOWN
PORT AFT - OPPOSITE HAND

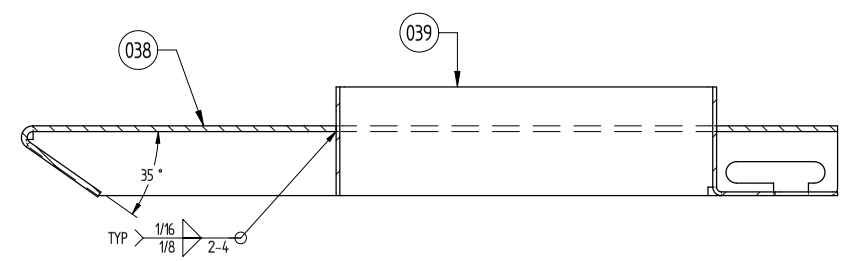

SECTION VIEW 71B (71C)

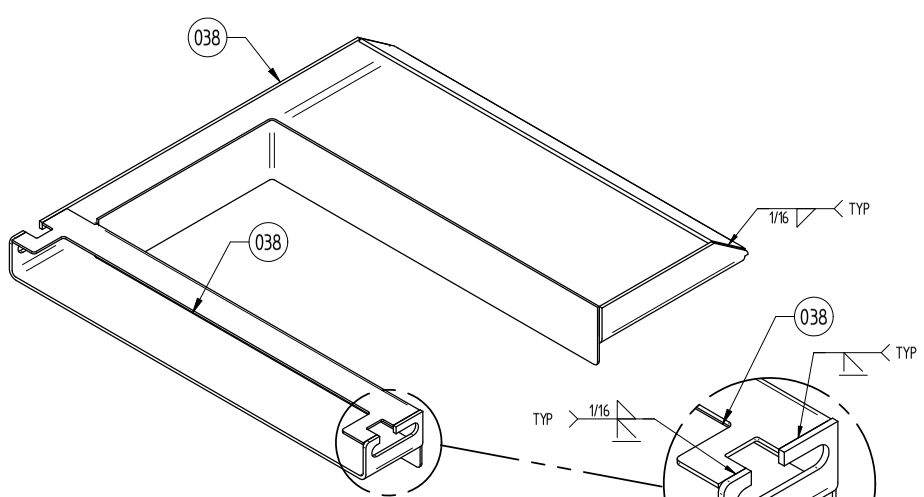

BOTTOM ISOMETRIC VIEW 75A
PLATFORM PANEL ASSEMBLY "D"
STBD AFT - SHOWN
PORT AFT - OPPOSITE HAND

PUGET SOUND NAVAL SHIPYARD
CODE 2370
ENGINEERING DIVISION

NO DEVIATIONS SHALL BE MADE
WITHOUT CODE 2370 APPROVAL

Unless otherwise specified, dimensions are in inches.
Decimals:
X.X = ±0.13
X.XX = ±0.025
X.XXX = ±0.003
X.XXXX = ±0.0005
Fractions = ±1/16 < 36"
Fractions = ±1/8 > 36"
Angles = ±0.5°
Drawing dimensional and geometric tolerances per ASME Y14.5M-1994

DRAWING NO.	FSR	REF #
2301-3696	2370-3696	N/A

TITLE
RAE COAMING MODIFICATIONS

SCALE: AS SHOWN | **Sheet 15 of 30** | REV. **A**

TITLE: RAE COAMING MODIFICATIONS
DWG. NO.: 2301-3696
REV.: A
SHEET: 15

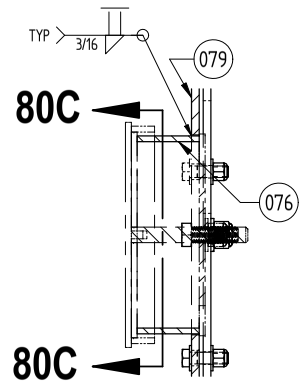

SECTION VIEW 80D (77C)

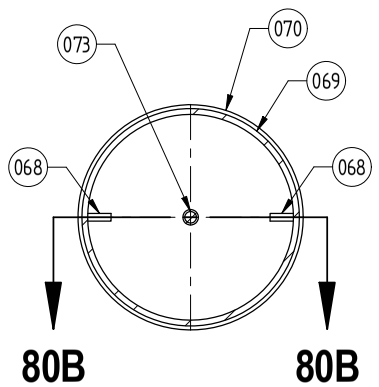

SECTION VIEW 80C (80D)

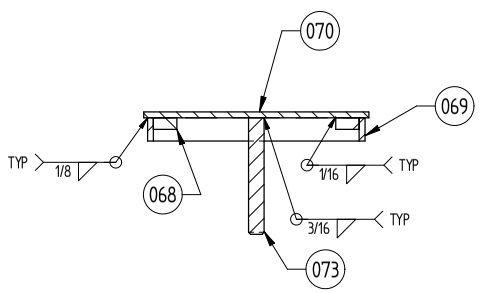

SECTION VIEW 80B (80C)

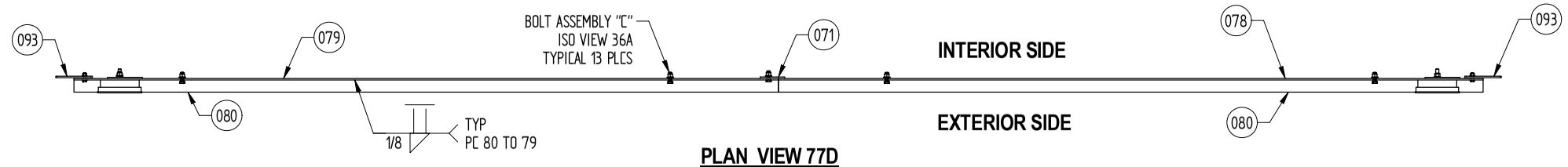

PLAN VIEW 77D
COAMING MAKEUP ASSEMBLY
FWD & AFT

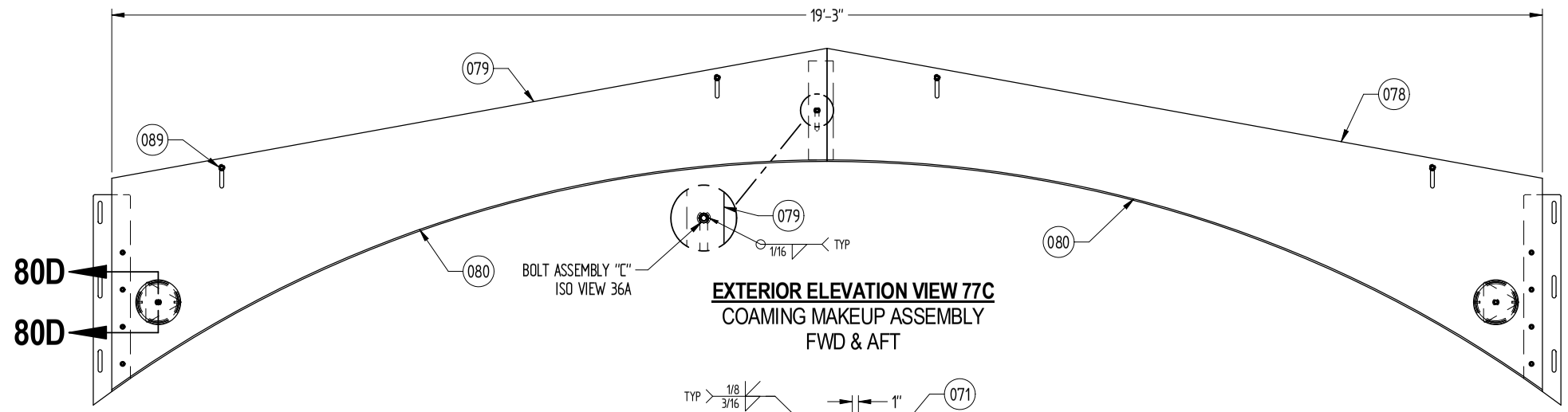

EXTERIOR ELEVATION VIEW 77C
COAMING MAKEUP ASSEMBLY
FWD & AFT

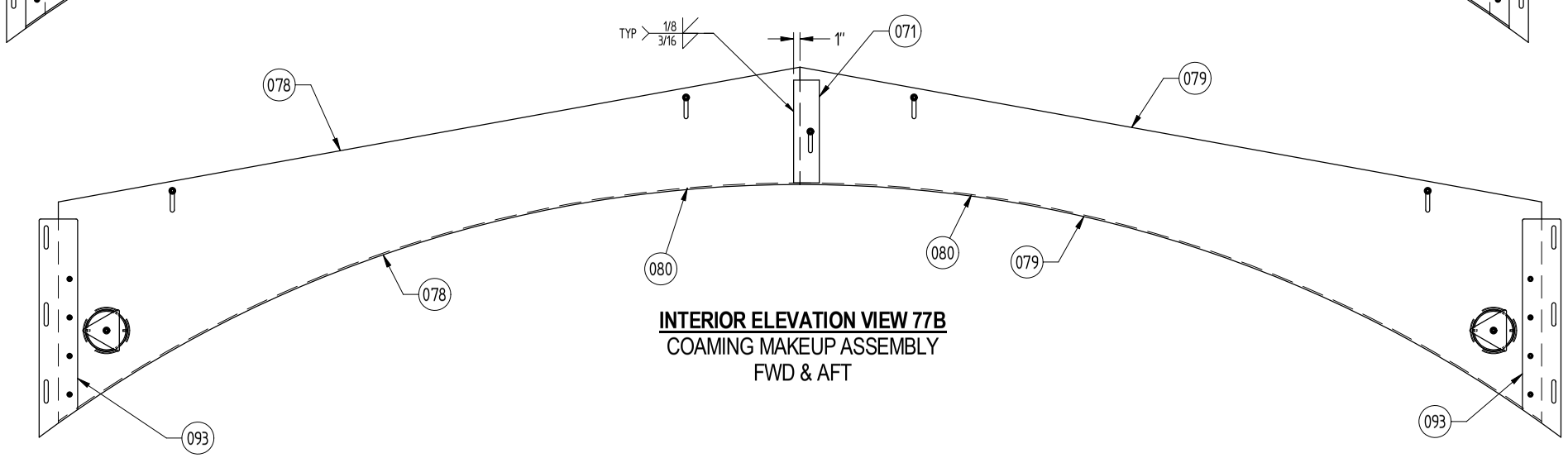

INTERIOR ELEVATION VIEW 77B
COAMING MAKEUP ASSEMBLY
FWD & AFT

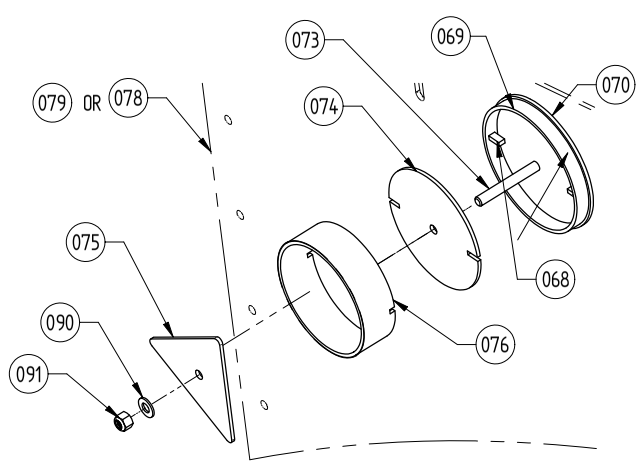

ISOMETRIC VIEW 80A
6 IN SERVICE SLEEVE ASSEMBLY

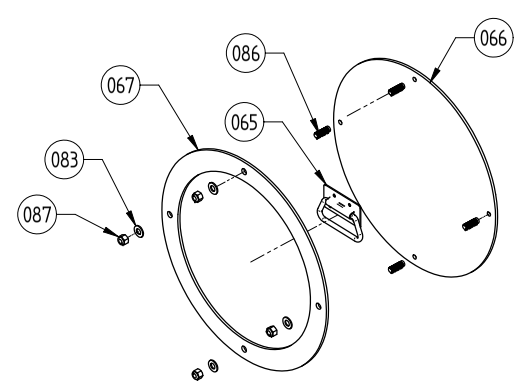

ISOMETRIC VIEW 78A
VENT OPENING COVER ASSEMBLY

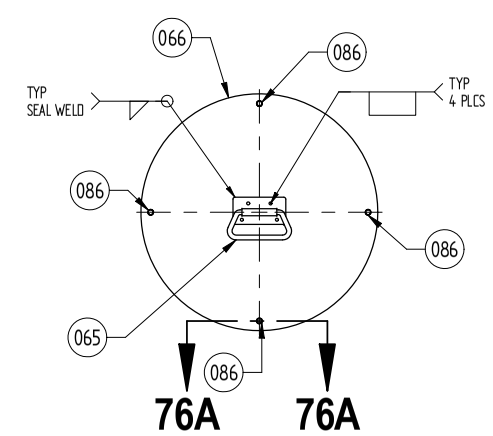

DETAIL VIEW 77A
VENT OPENING COVER
WELDMENT

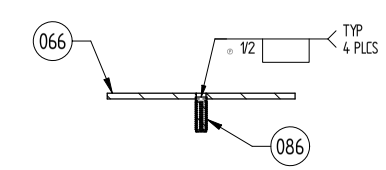

SECTION VIEW 76A (77A)

Unless otherwise specified, dimensions are in inches.
Decimals:
X.X = ±0.13
X.XX = ±0.025
X.XXX = ±0.003
X.XXXX = ±0.0005
Fractions = ±1/16 < 36"
Fractions = ±1/8 > 36"
Angles = ±0.5°
Drawing dimensional and geometric tolerances per ASME Y14.5M-1994

PUGET SOUND NAVAL SHIPYARD
CODE 2370
ENGINEERING DIVISION

NO DEVIATIONS SHALL BE MADE
WITHOUT CODE 2370 APPROVAL

DRAWING NO.	FSR	RF #
2301-3696	2370-3696	N/A

TITLE
RAE COAMING MODIFICATIONS

SCALE: AS SHOWN | **Sheet 16 of 30** | REV. A

DWG. NO. 2301-3696 | TITLE RAE COAMING MODIFICATIONS | REV. A | SHEET 16

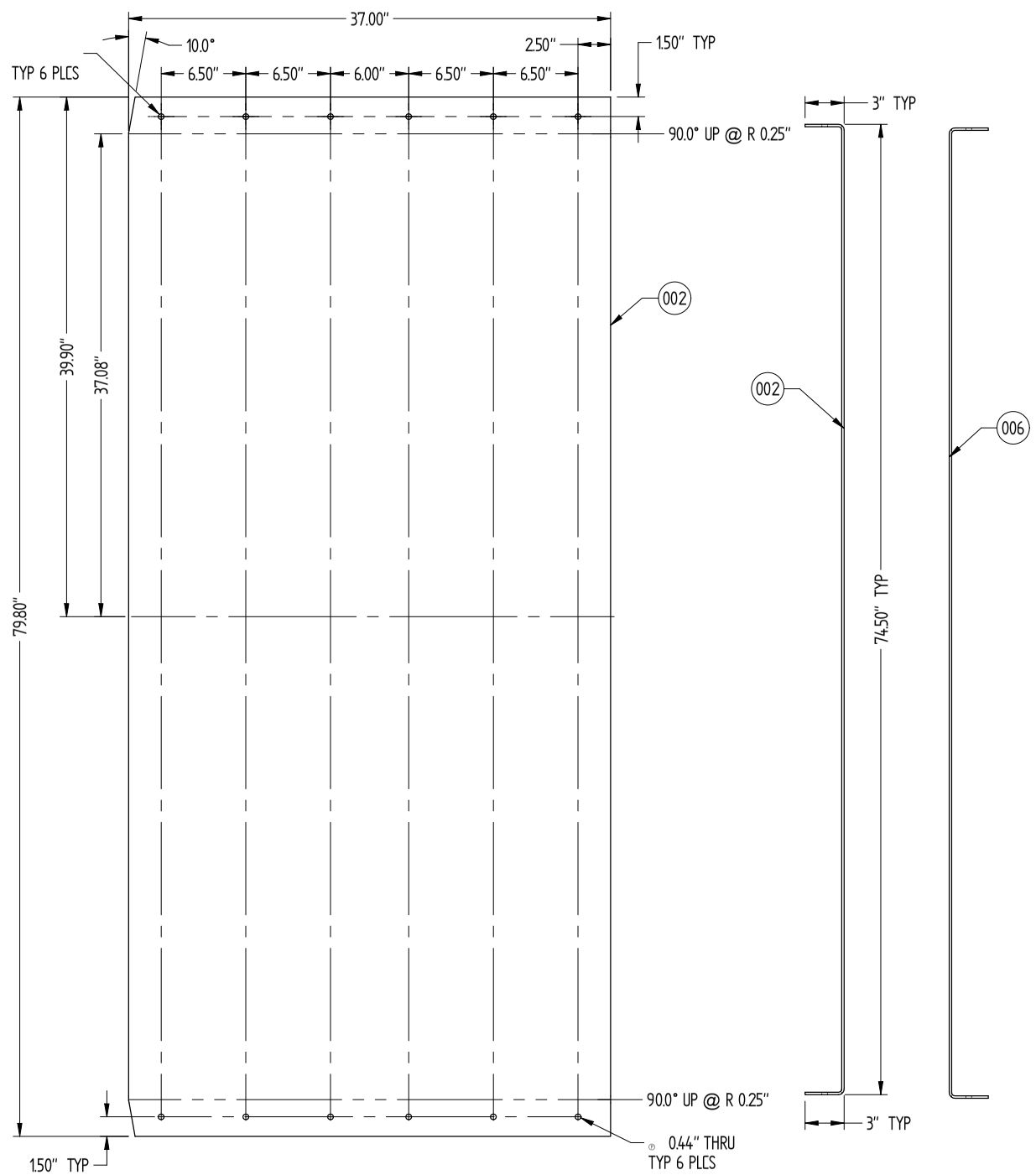

PLAN VIEW 85A
FLAT PATTERN AND FORMED - PC 002 & PC 006
BEND PC 006 - OPPOSITE HAND

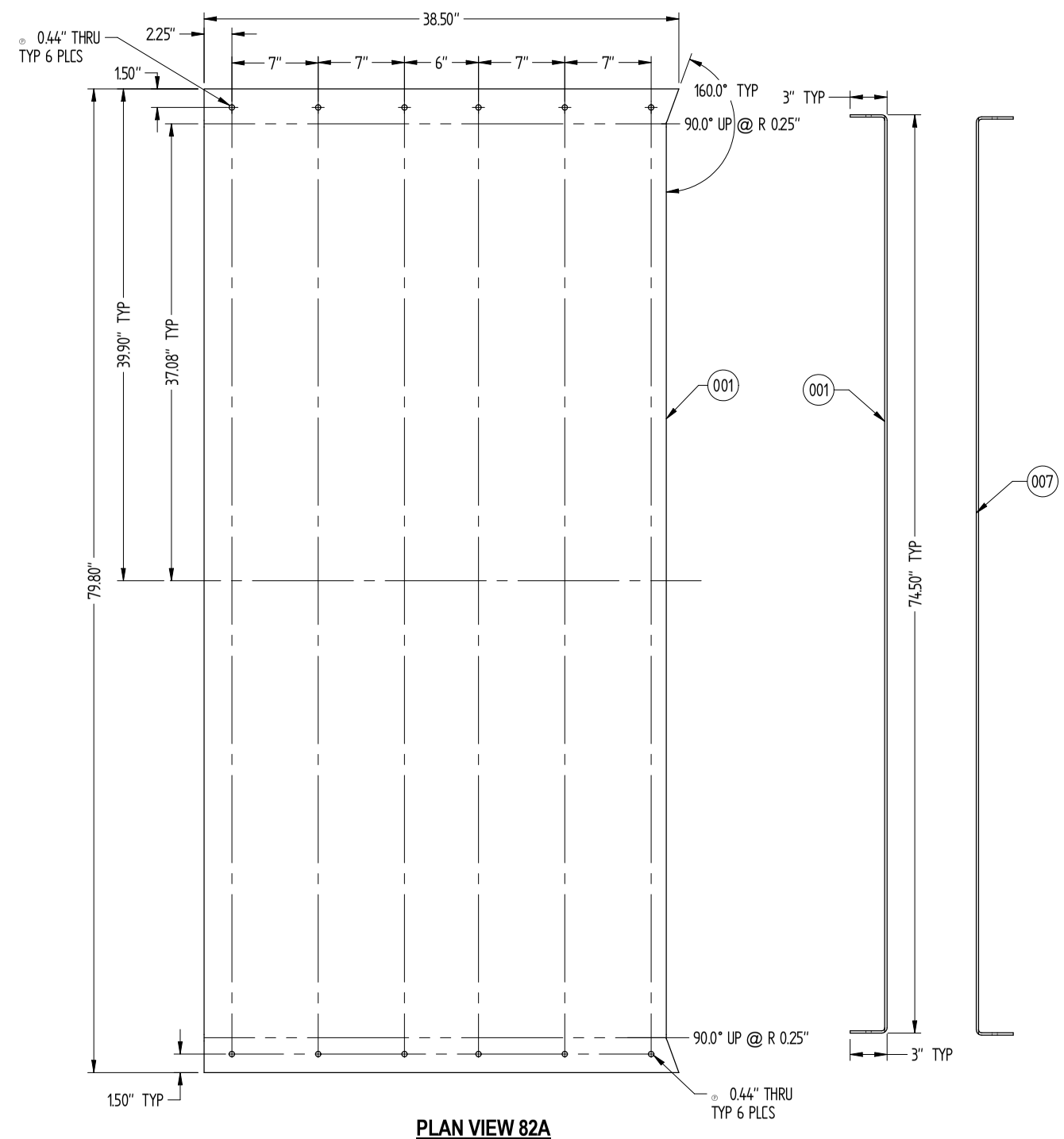

PLAN VIEW 82A
FLAT PATTERN AND FORMED - PC 001 & PC 007
BEND PC 007 - OPPOSITE HAND

PUGET SOUND NAVAL SHIPYARD
CODE 2370
ENGINEERING DIVISION

NO DEVIATIONS SHALL BE MADE
WITHOUT CODE 2370 APPROVAL

Unless otherwise specified, dimensions are in inches.

Decimals:
X.X = ±0.13
X.XX = ±0.025
X.XXX = ±0.003
X.XXXX = ±0.0005
Fractions = ±1/16 < 36"
Fractions = ±1/8 > 36"
Angles = ±0.5°
Drawing dimensional and geometric tolerances per: ASME Y14.5M-1994

DRAWING NO.	FSR	RF #
2301-3696	2370-3696	N/A

TITLE
RAE COAMING MODIFICATIONS

SCALE		REV.
AS SHOWN	Sheet 17 of 30	A

TITLE RAE COAMING MODIFICATIONS
REV. A
SHEET 17
DWG. NO. 2301-3696

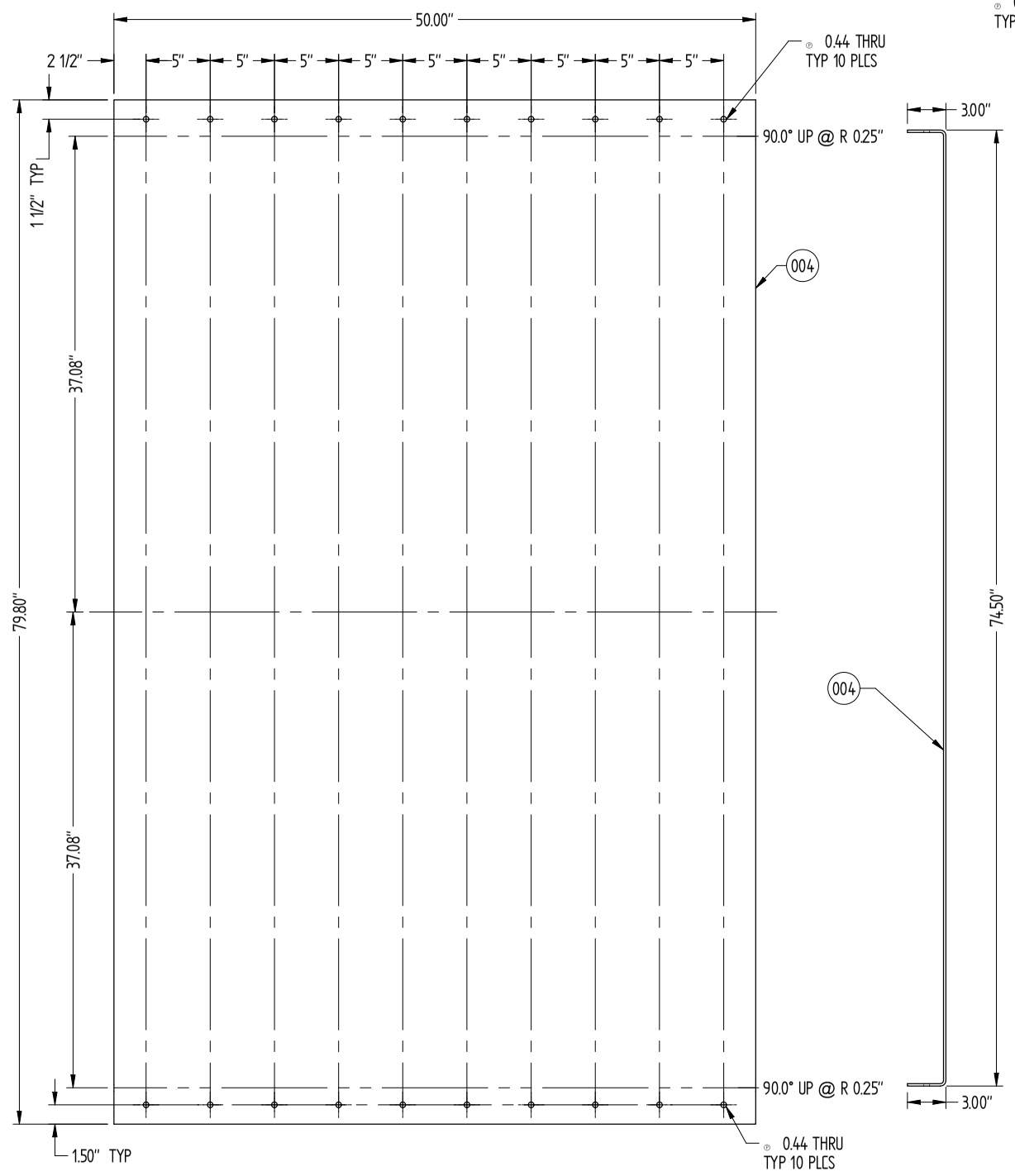

PLAN VIEW 89A

FLAT PATTERN AND FORMED - PC 004

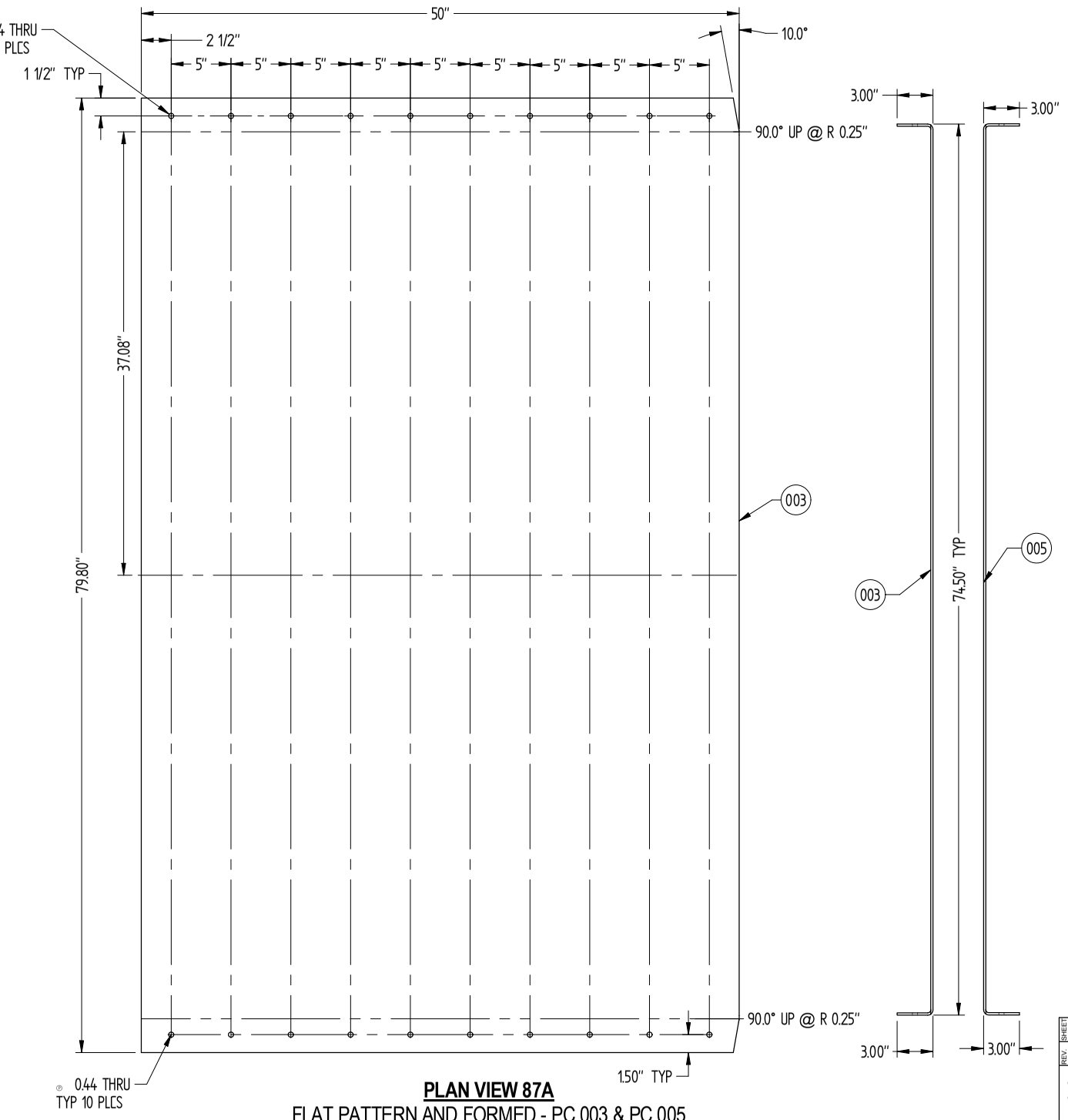

PLAN VIEW 87A

FLAT PATTERN AND FORMED - PC 003 & PC 005

BEND PC 005 - OPPOSITE HAND

PUGET SOUND NAVAL SHIPYARD
CODE 2370
ENGINEERING DIVISION

NO DEVIATIONS SHALL BE MADE
WITHOUT CODE 2370 APPROVAL

Unless otherwise specified, dimensions are in inches.

Decimals:
X.X = ±0.13
X.XX = ±0.025
X.XXX = ±0.003
X.XXXX = ±0.0005
Fractions = ±1/16 < 36"
Fractions = ±1/8 > 36"
Angles = ±0.5°

Drawing dimensional and geometric tolerances per: ASME Y14.5M-1994

DRAWING NO.	FSR	RF #
2301-3696	2370-3696	N/A

TITLE
RAE COAMING MODIFICATIONS

SCALE: AS SHOWN | **Sheet 18 of 30** | REV. **A**

SHEET 18 | REV. A | TITLE: RAE COAMING MODIFICATIONS | DWG. NO. 2301-3696

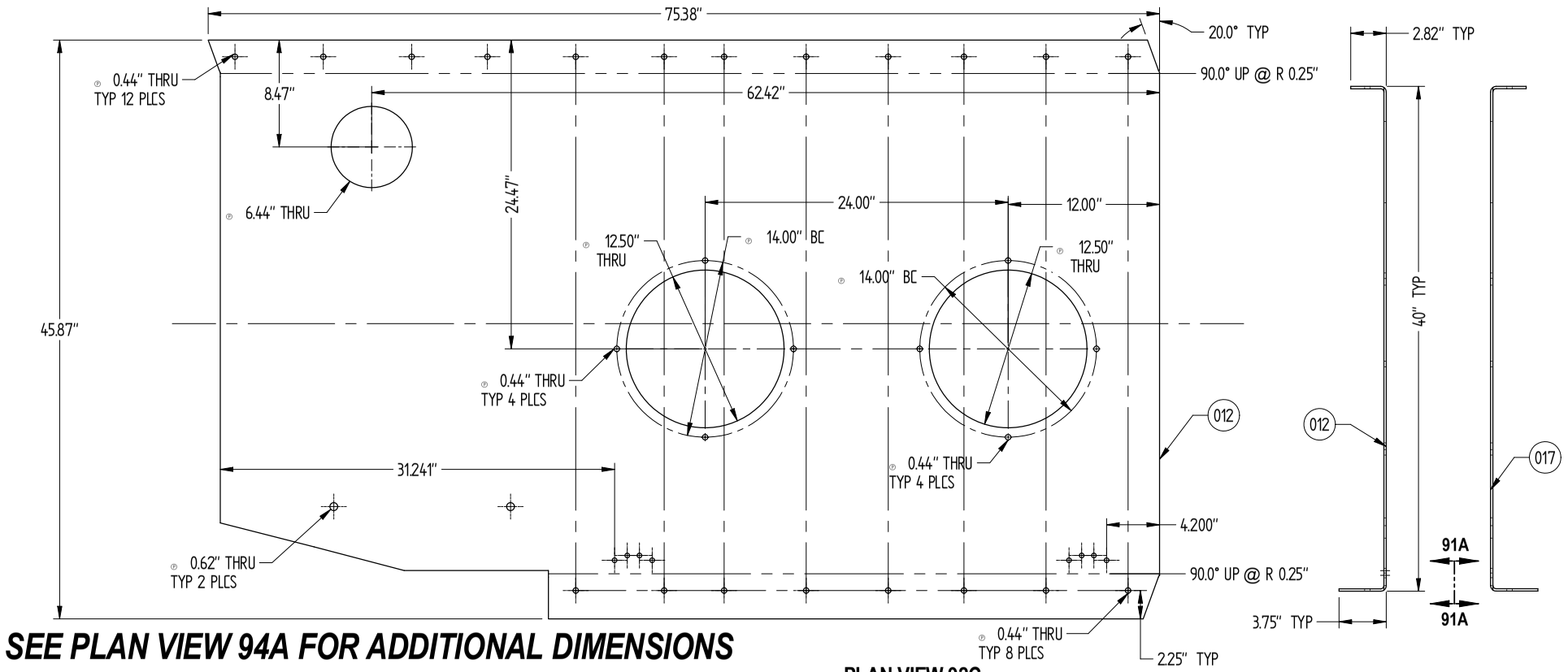

SEE PLAN VIEW 94A FOR ADDITIONAL DIMENSIONS

PLAN VIEW 92C

A FLAT PATTERN AND FORMED- PC 012 & PC 017
BEND PC 017 - OPPOSITE HAND

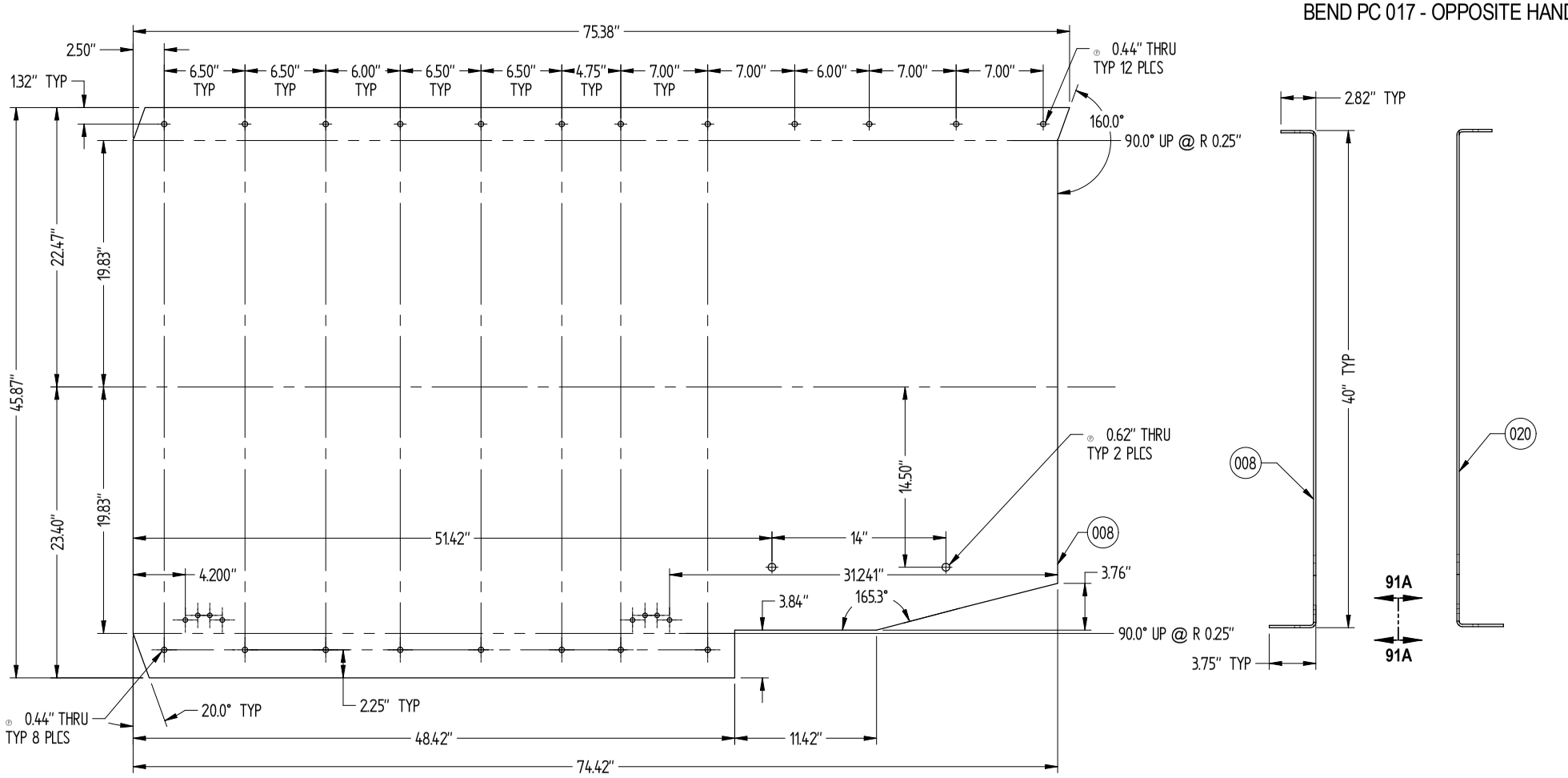

PLAN VIEW 94A

FLAT PATTERN AND FORMED - PC 008 & PC 020
BEND PC 020 - OPPOSITE HAND

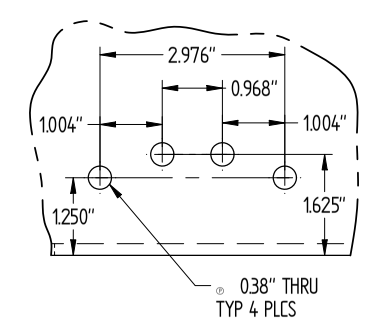

DETAIL VIEW 91A (94A, 92C, 97C,99A, 99C

HOLE PATTERN FOR HINGE (PC 098)
TYPICAL

PUGET SOUND NAVAL SHIPYARD
CODE 2370
ENGINEERING DIVISION

NO DEVIATIONS SHALL BE MADE
WITHOUT CODE 2370 APPROVAL

Unless otherwise specified, dimensions are in inches.
Decimals:
X.X = ±0.13
X.XX = ±0.025
X.XXX = ±0.003
X.XXXX = ±0.0005
Fractions = ±1/16 < 36"
Fractions = ±1/8 > 36"
Angles = ±0.5°
Drawing dimensional and geometric tolerances per ASME Y14.5M-1994

DRAWING NO.	FSR	RF #
2301-3696	2370-3696	N/A

TITLE
RAE COAMING MODIFICATIONS

SCALE AS SHOWN | **Sheet 19 of 30** | REV. A

TITLE RAE COAMING MODIFICATIONS
REV. A
SHEET 19
DWG. NO. 2301-3696

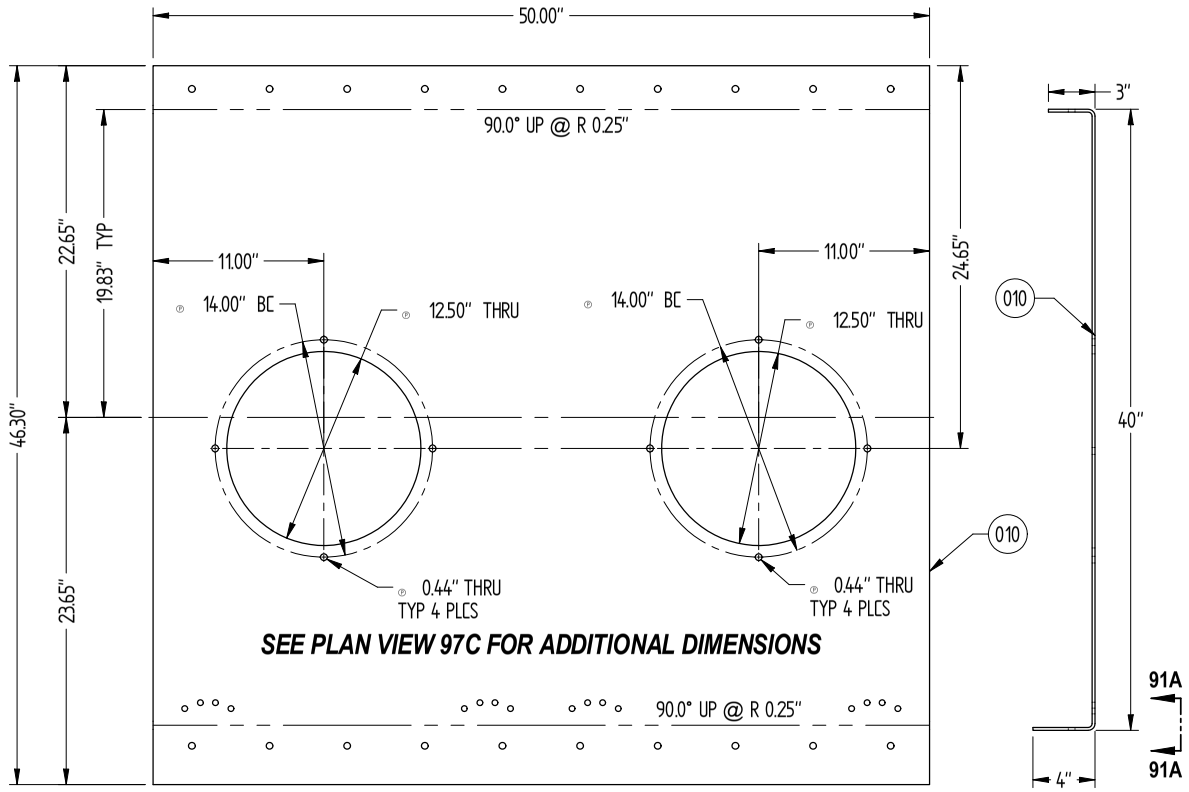

PLAN VIEW 99C
FLAT PATTERN AND FORMED - PC 010

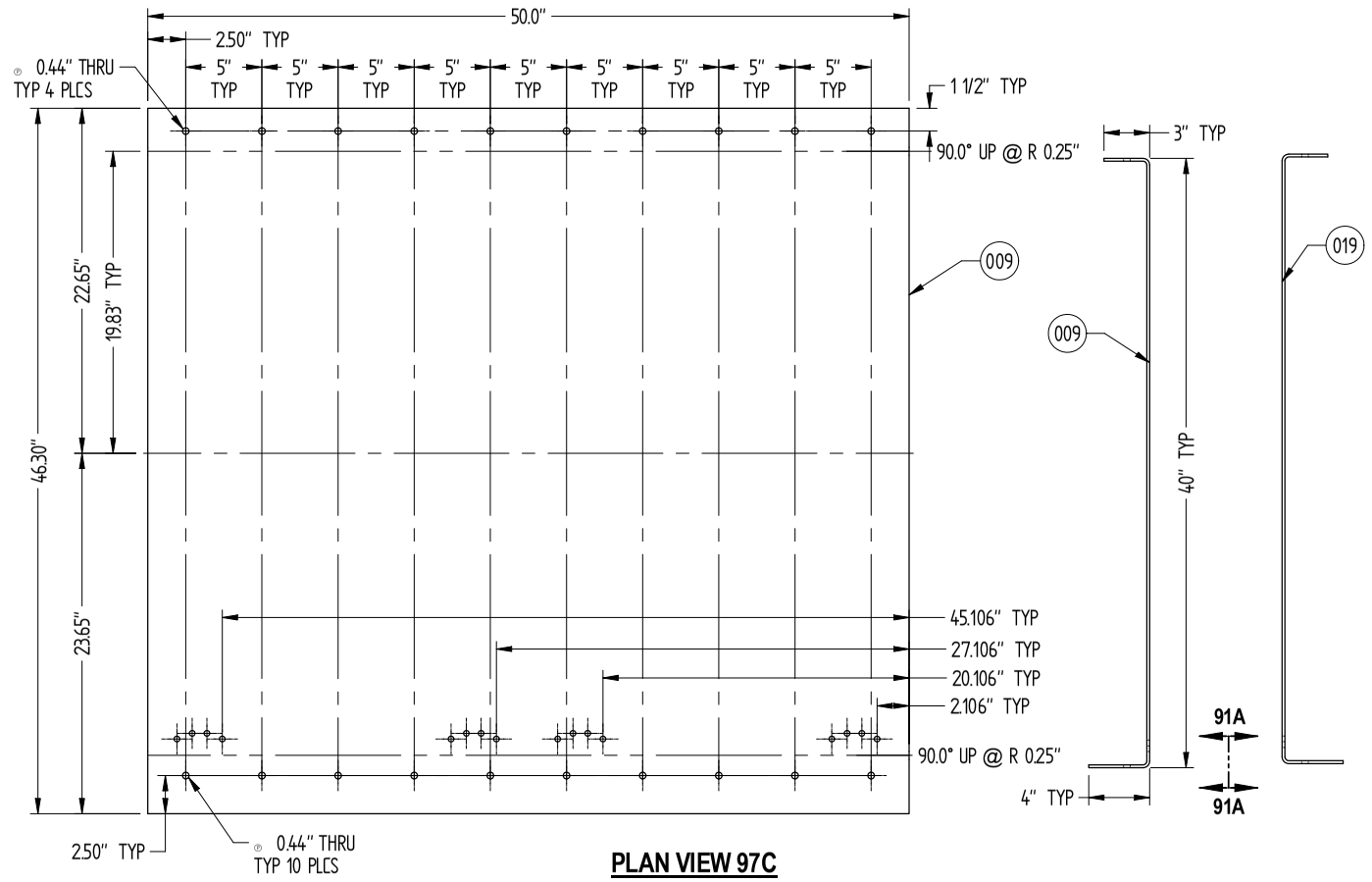

PLAN VIEW 97C
FLAT PATTERN AND FORMED - PC 009 & PC 019
BEND PC 019 - OPPOSITE HAND

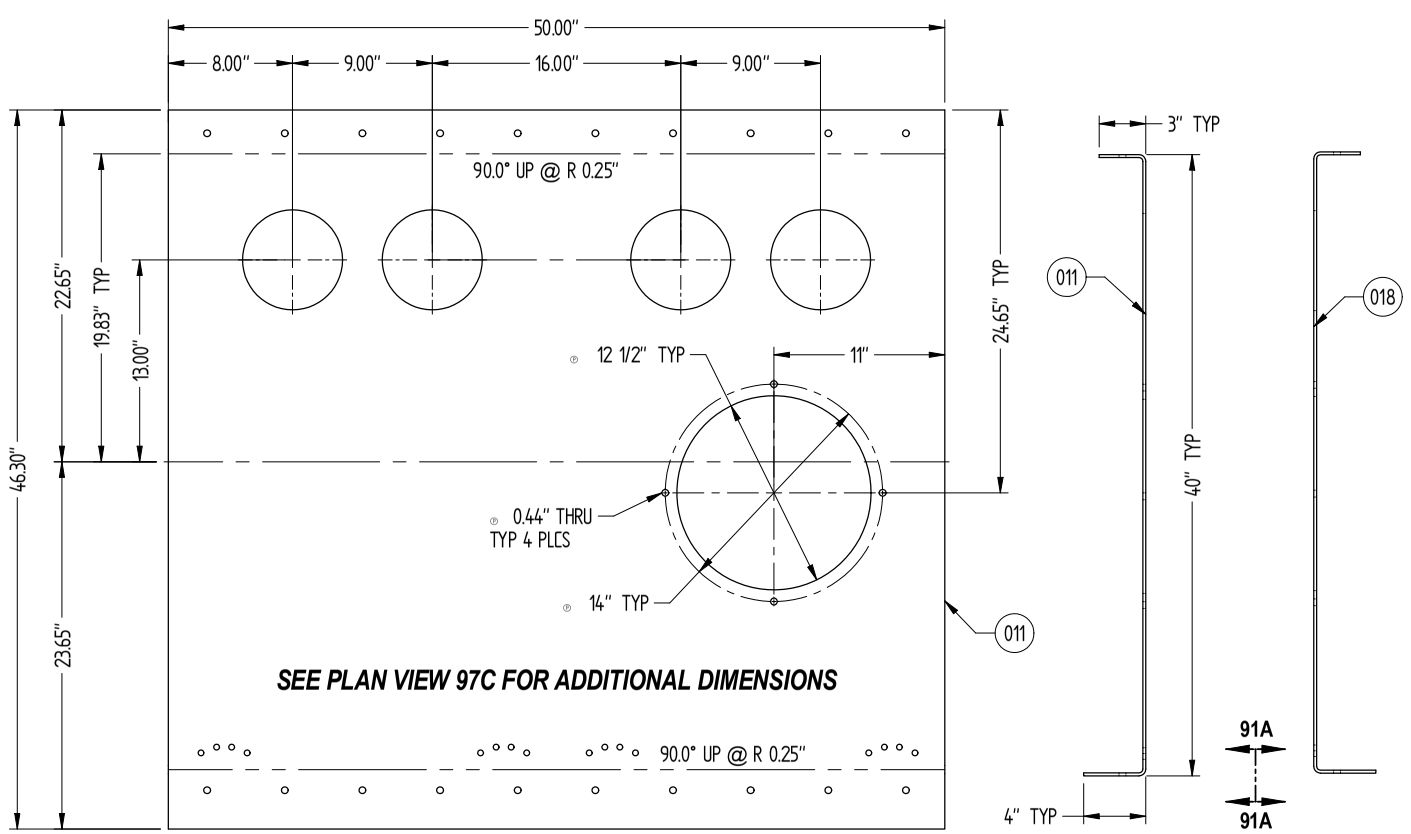

PLAN VIEW 99A
FLAT PATTERN AND FORMED - PC 011 & PC 018
BEND PC 018 - OPPOSITE HAND

A

PUGET SOUND NAVAL SHIPYARD **CODE 2370** **ENGINEERING DIVISION**			
Unless otherwise specified, dimensions are in inches. Decimals: X.X = ±0.13 X.XX = ±0.025 X.XXX = ±0.003 X.XXXX = ±0.0005 Fractions = ±1/16 < 36" Fractions = ±1/8 > 36" Angles = ±0.5° Drawing dimensional and geometric tolerances per ASME Y14.5M-1994	NO DEVIATIONS SHALL BE MADE WITHOUT CODE 2370 APPROVAL		
	DRAWING NO. **2301-3696**	FSR **2370-3696**	RF # **N/A**
	TITLE **RAE COAMING MODIFICATIONS**		
	SCALE AS SHOWN	**Sheet 20 of 30**	REV. **A**

TITLE: RAE COAMING MODIFICATIONS
REV: A
SHEET: 20
DWG. NO. 2301-3696

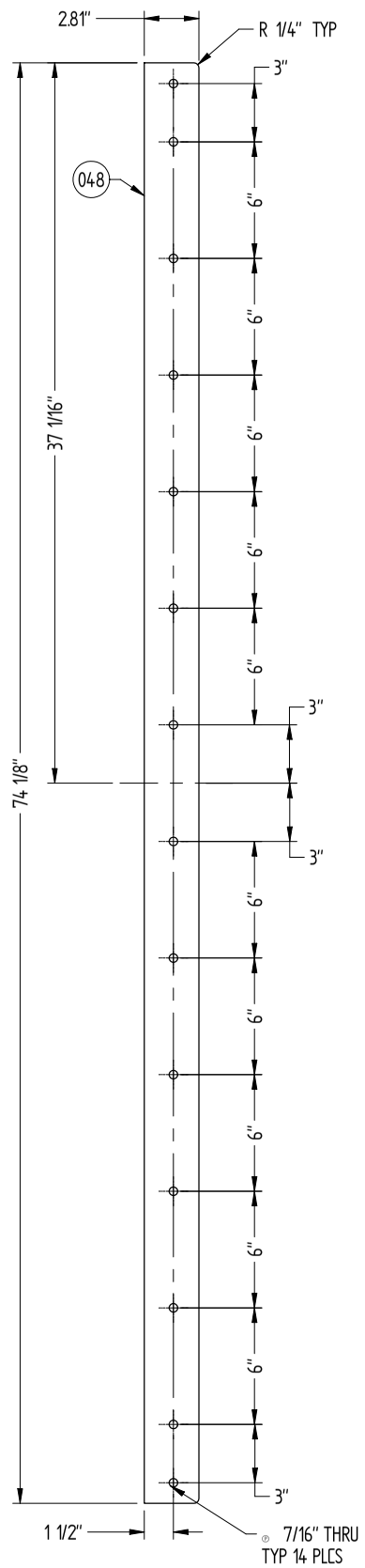

PLAN VIEW 105A
END PLATE - PC 048

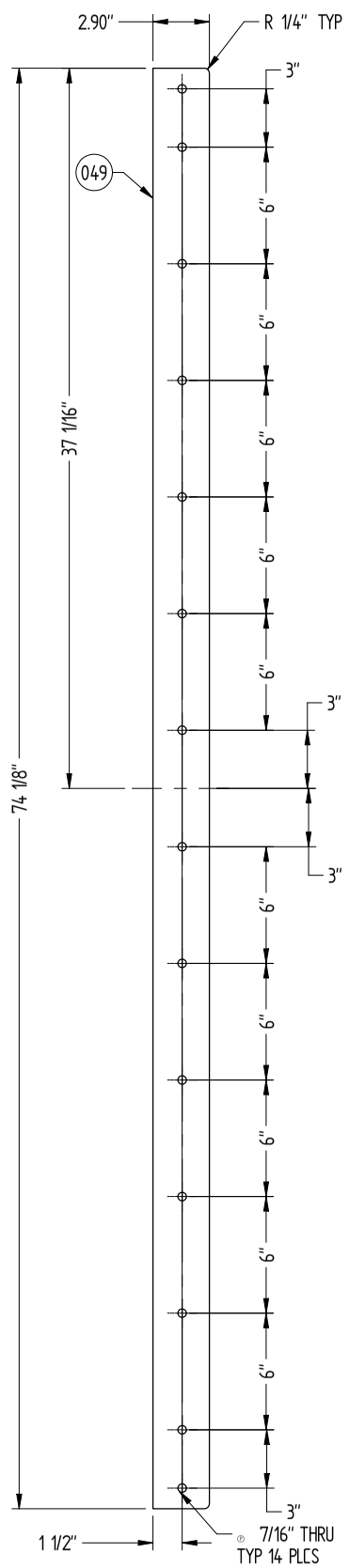

PLAN VIEW 104A
END PLATE - PC 049

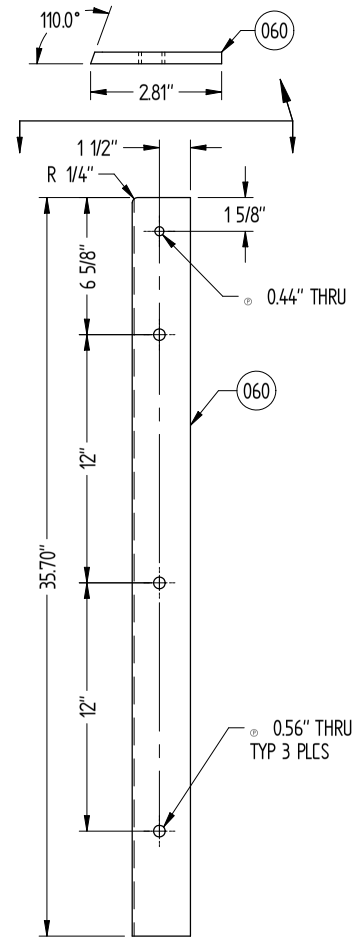

PLAN VIEW 102C
END PLATE - PC 060

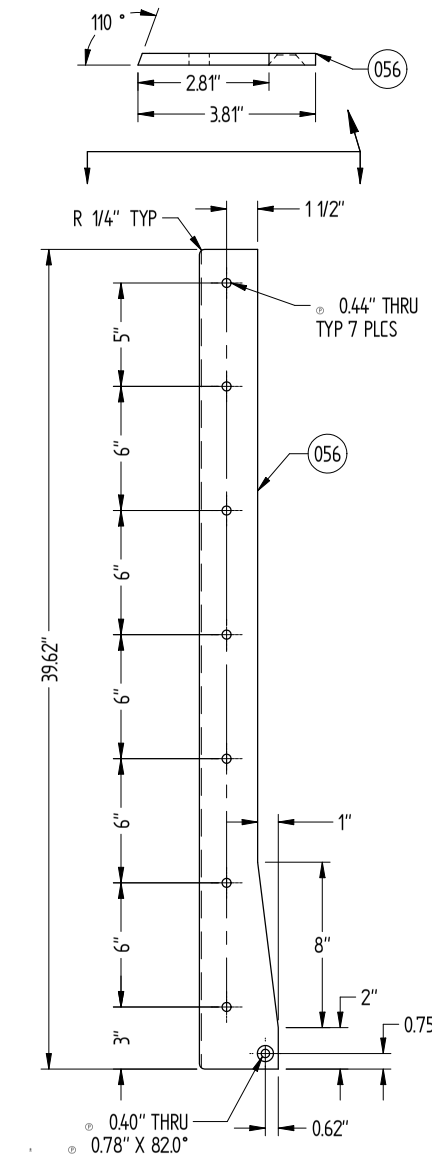

PLAN VIEW 101B
END PLATE - PC 056

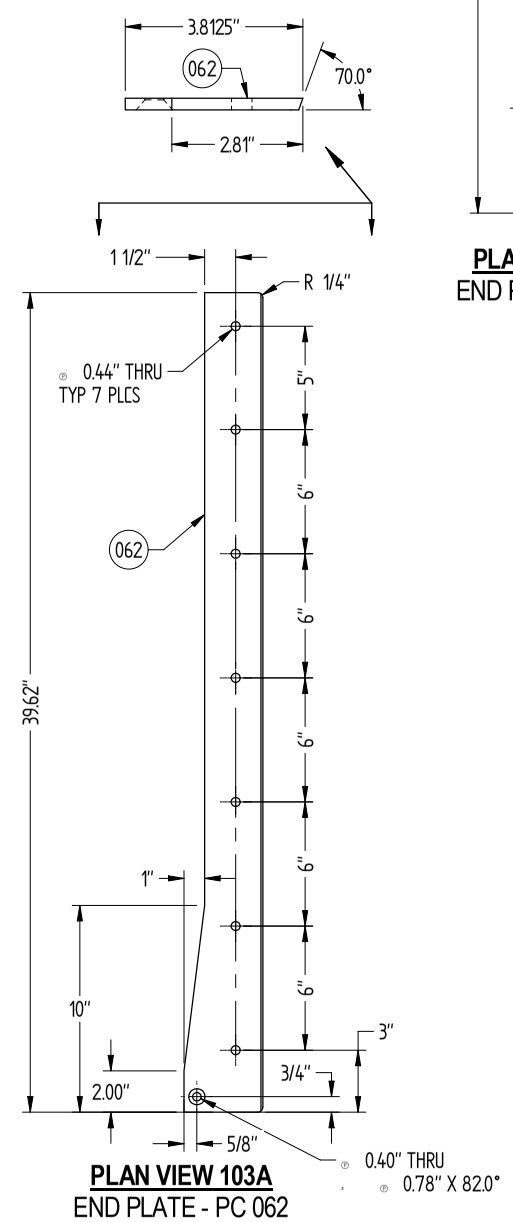

PLAN VIEW 103A
END PLATE - PC 062

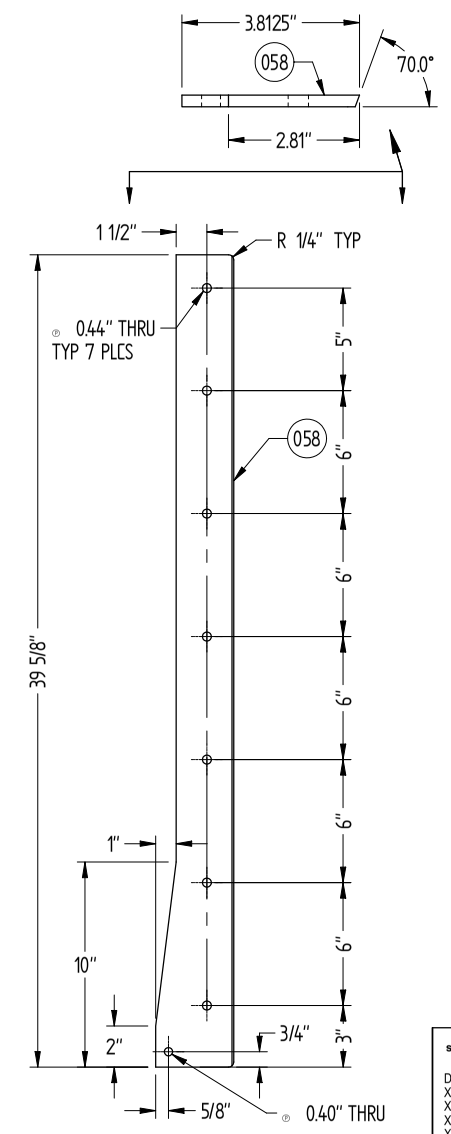

PLAN VIEW 102A
MID PLATE - PC 058

PUGET SOUND NAVAL SHIPYARD **CODE 2370** **ENGINEERING DIVISION**			
NO DEVIATIONS SHALL BE MADE WITHOUT CODE 2370 APPROVAL			
DRAWING NO. **2301-3696**	FSR **2370-3696**	RF # **N/A**	
TITLE **RAE COAMING MODIFICATIONS**			
SCALE AS SHOWN	**Sheet 21 of 30**	REV. **A**	

Unless otherwise specified, dimensions are in inches.
Decimals:
X.X = ±0.13
X.XX = ±0.025
X.XXX = ±0.003
X.XXXX = ±0.0005
Fractions = ± 1/16 < 36"
Fractions = ± 1/8 > 36"
Angles = ±0.5°
Drawing dimensional and geometric tolerances per ASME Y14.5M-1994

TITLE: RAE COAMING MODIFICATIONS
DWG. NO. 2301-3696
REV. A
SHEET 21

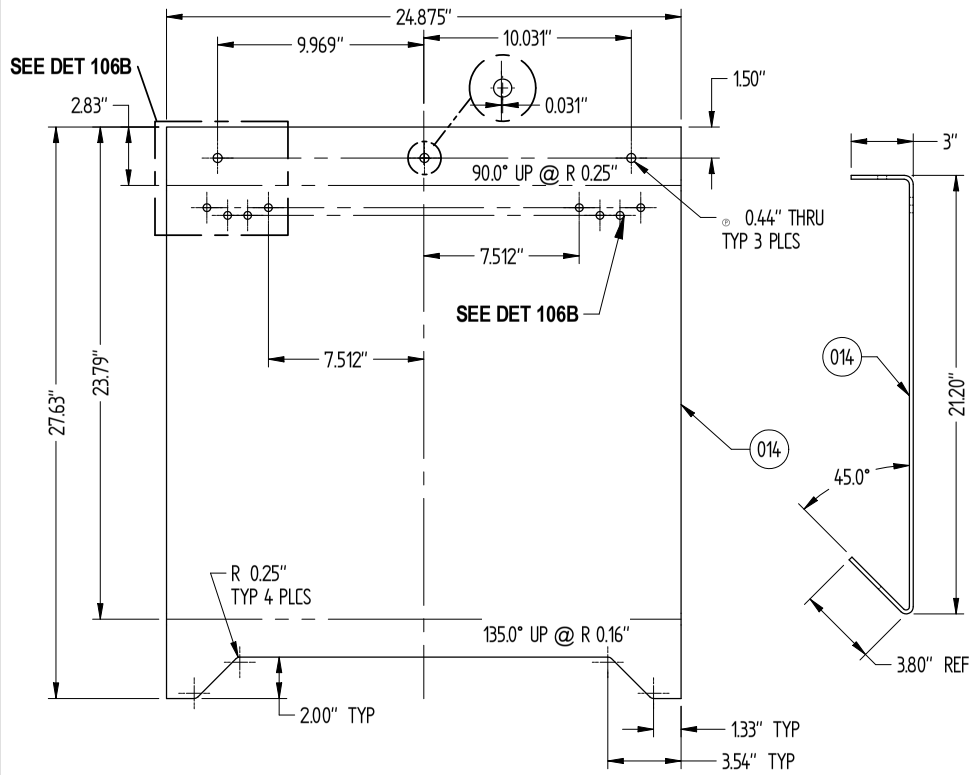

PLAN VIEW 110C
FLAT PATTERN AND FORMED - PC 014

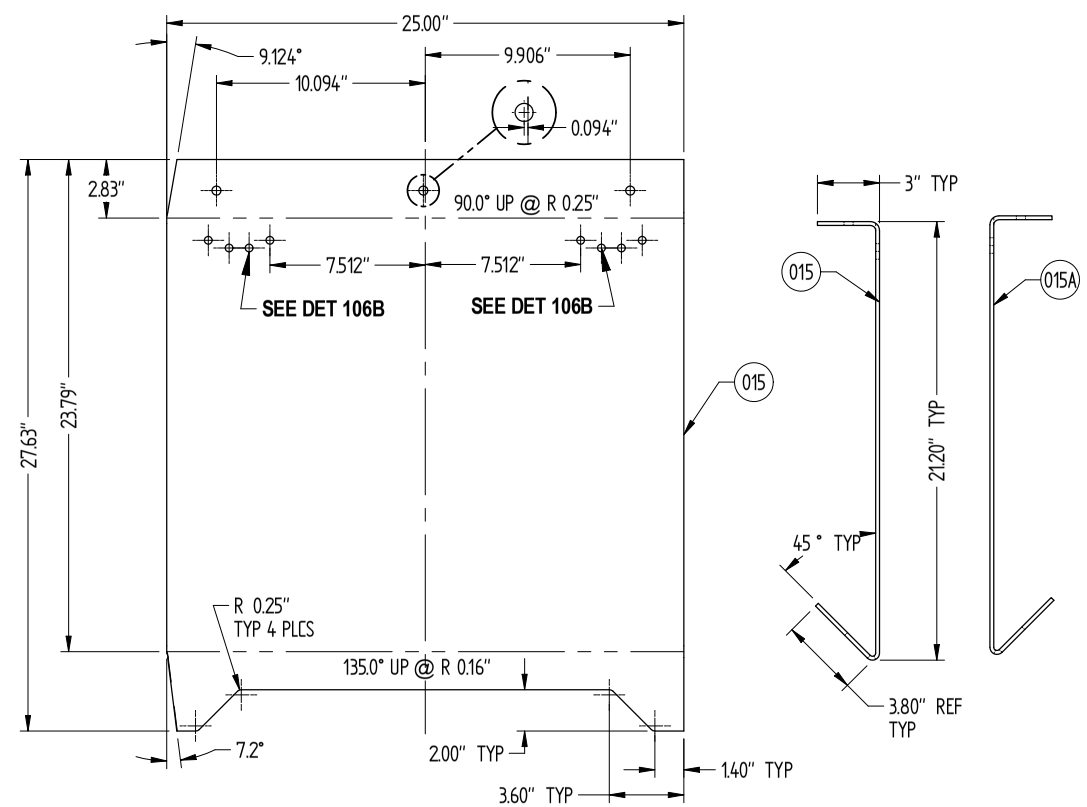

PLAN VIEW 108C
FLAT PATTERN AND FORMED - PC 015 & PC 015A
BEND PC 015A - OPPOSITE HAND

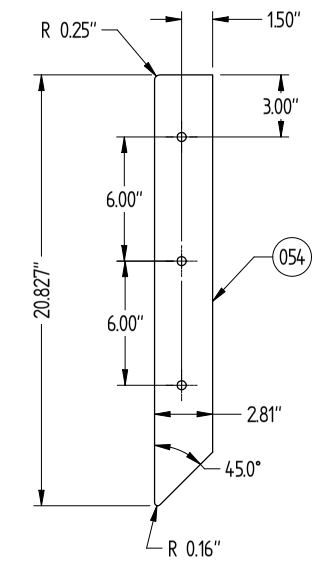

PLAN VIEW 106C
END PLATE AND STIFFENER (PC 054)

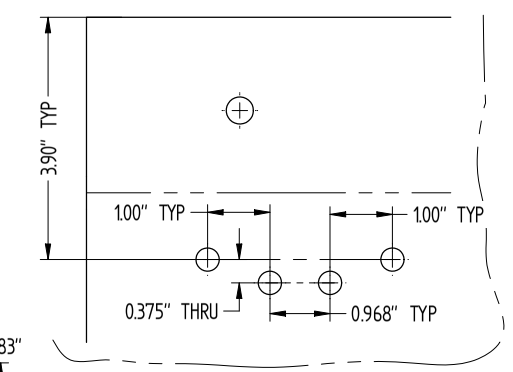

DETAIL VIEW 106B (108A, 108C, 110C)
HINGE HOLE LOCATION
TYPICAL

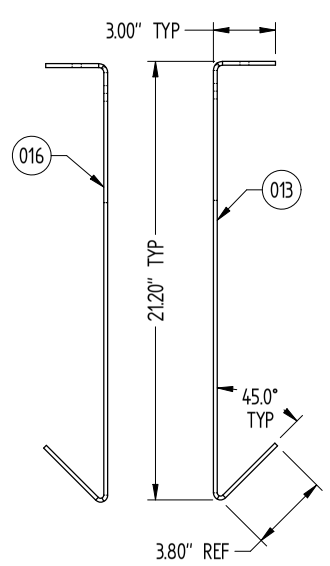

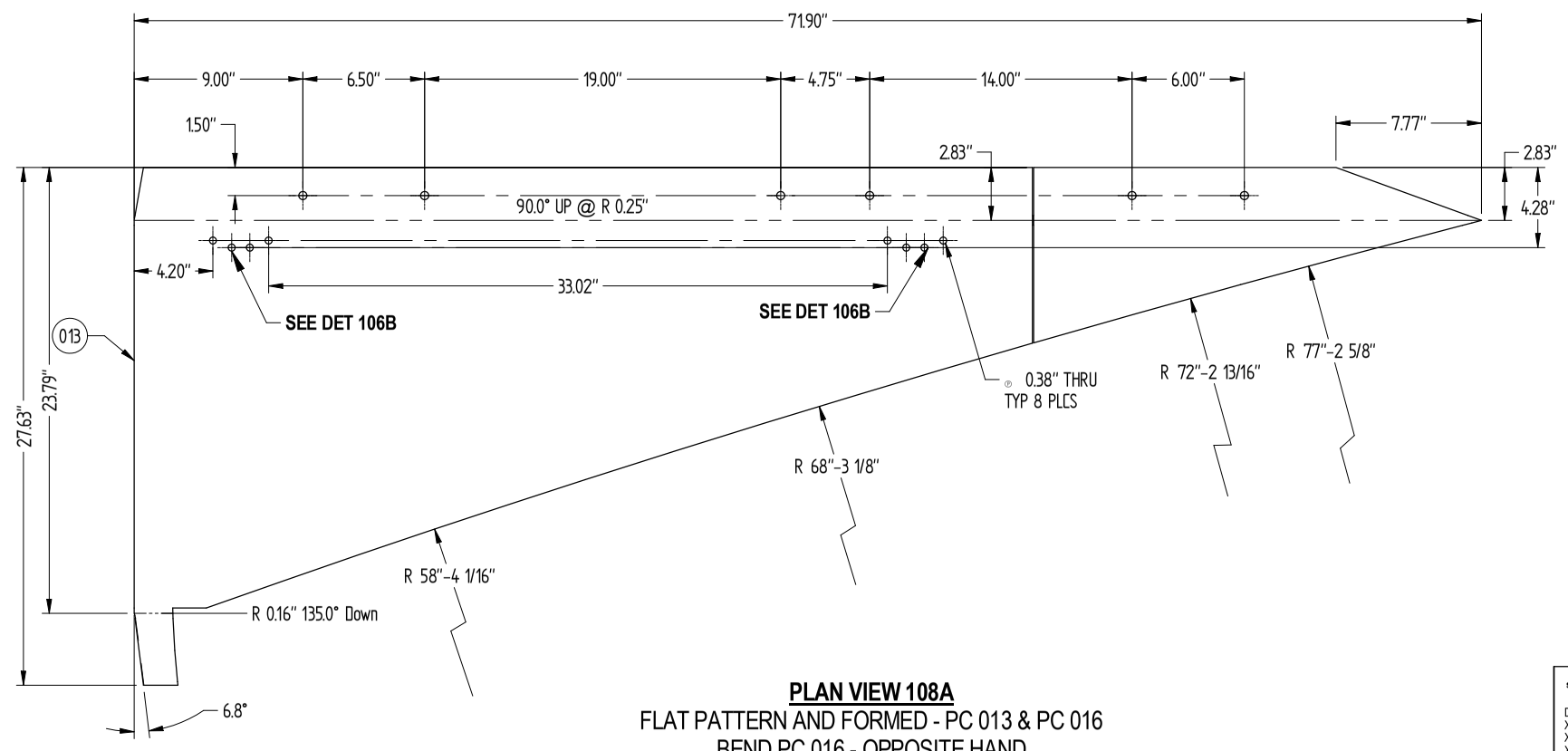

PLAN VIEW 108A
FLAT PATTERN AND FORMED - PC 013 & PC 016
BEND PC 016 - OPPOSITE HAND

PUGET SOUND NAVAL SHIPYARD
CODE 2370
ENGINEERING DIVISION

NO DEVIATIONS SHALL BE MADE
WITHOUT CODE 2370 APPROVAL

Unless otherwise specified, dimensions are in inches.
Decimals:
X.X = ±0.13
X.XX = ±0.025
X.XXX = ±0.003
X.XXXX = ±0.0005
Fractions = ±1/16 < 36"
Fractions = ±1/8 > 36"
Angles = ±0.5°
Drawing dimensional and geometric tolerances per ASME Y14.5M-1994

DRAWING NO.	FSR	REF #
2301-3696	2370-3696	N/A

TITLE
RAE COAMING MODIFICATIONS

SCALE		REV.
AS SHOWN	Sheet 22 of 30	A

TITLE RAE COAMING MODIFICATIONS
REV. A
SHEET 22
DWG. NO. 2301-3696

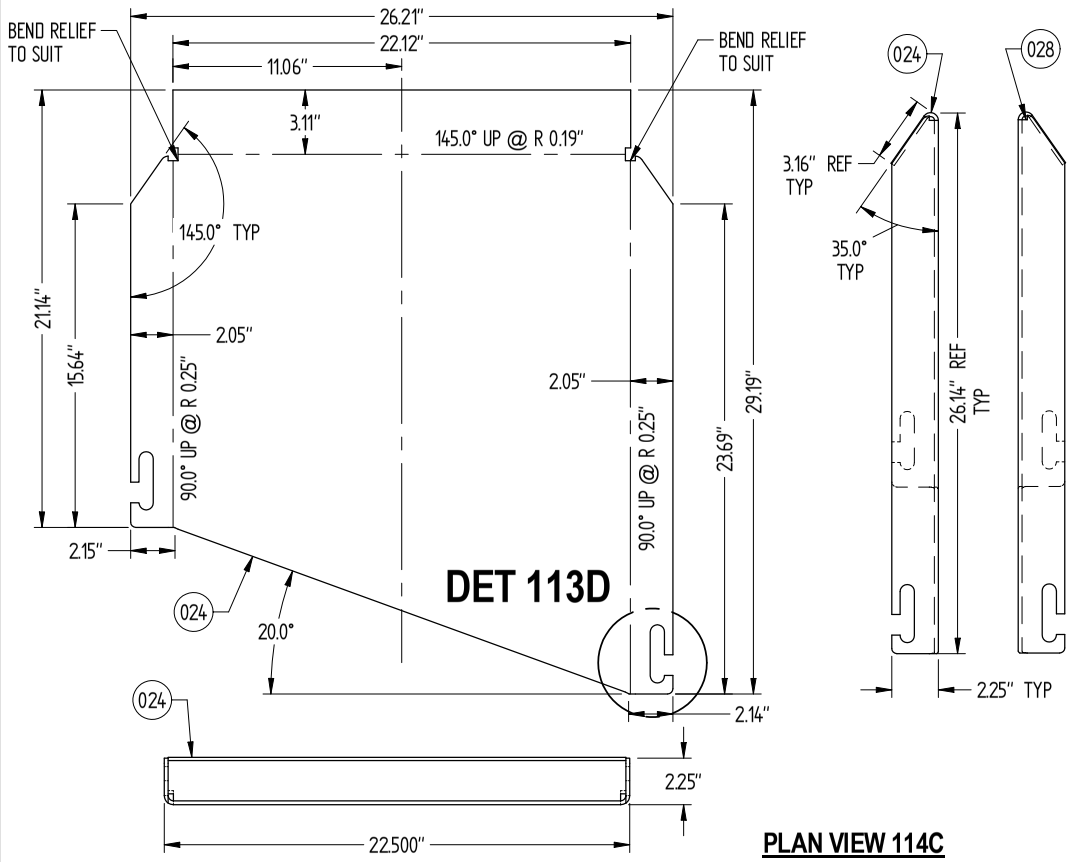

PLAN VIEW 114C
FLAT PATTERN & FORMED - PC 024 & PC 028
BEND PC 028 - OPPOSITE HAND

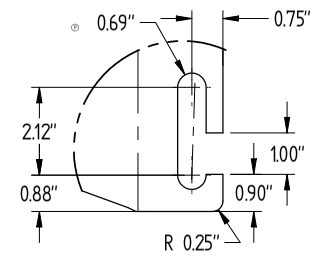

DETAIL VIEW 113D (114C)
NOTCH CUT OUT
PC 024 & PC 028 TYPICAL

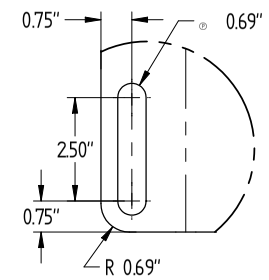

DETAIL VIEW 113C (112C)
SLOT CUTOUT (PC 021) TYPICAL

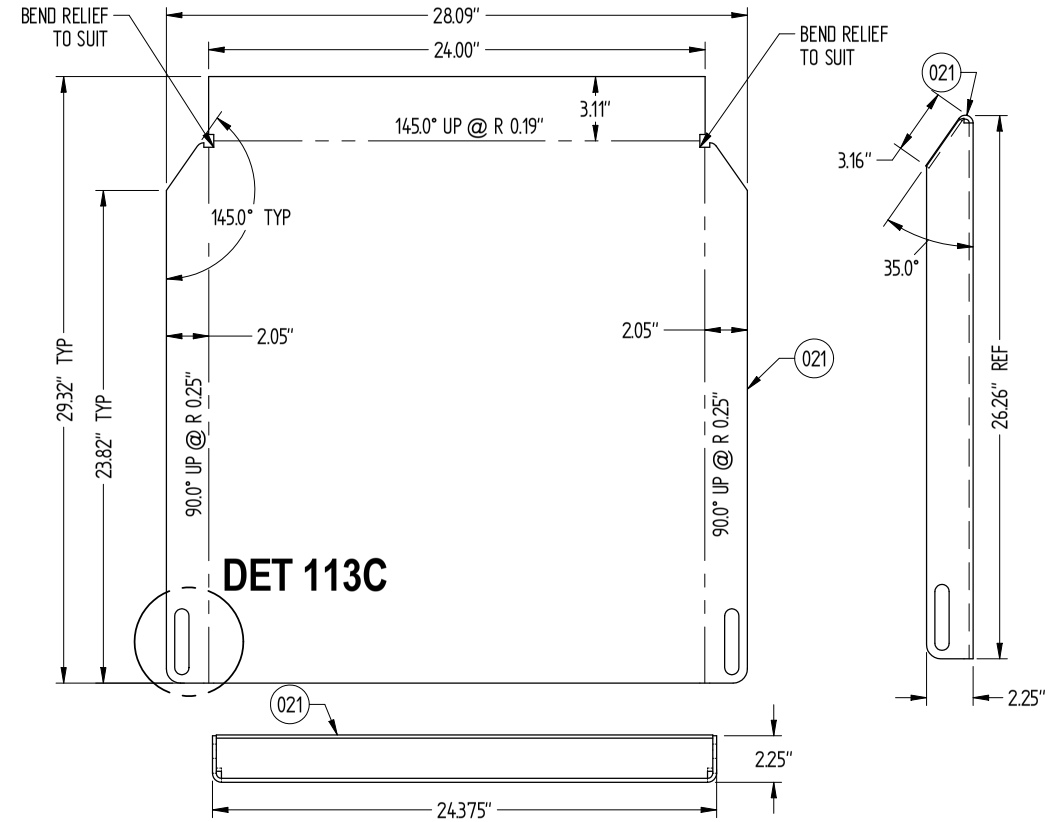

PLAN VIEW 112C
FLAT PATTERN & FORMED - PC 021

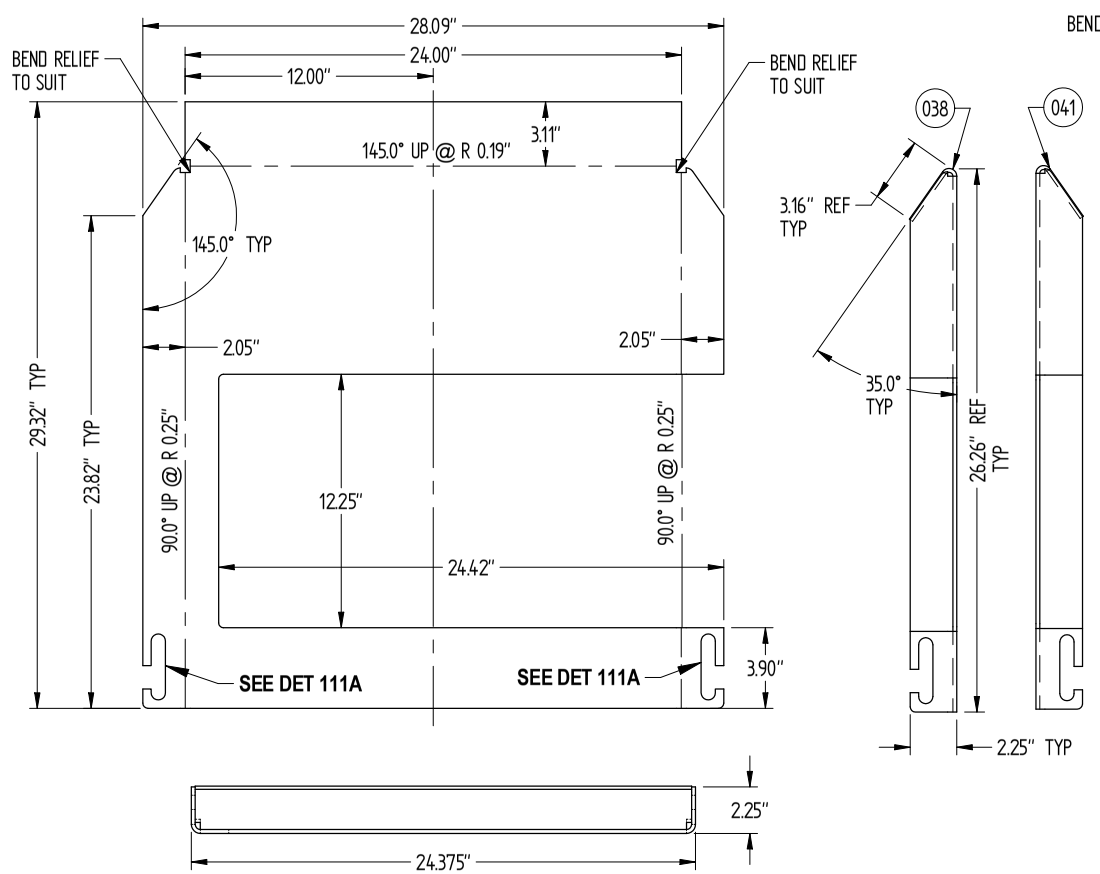

PLAN VIEW 114A
FLAT PATTERN & FORMED - PC 038 & PC 041
BEND PC 041 - OPPOSITE HAND

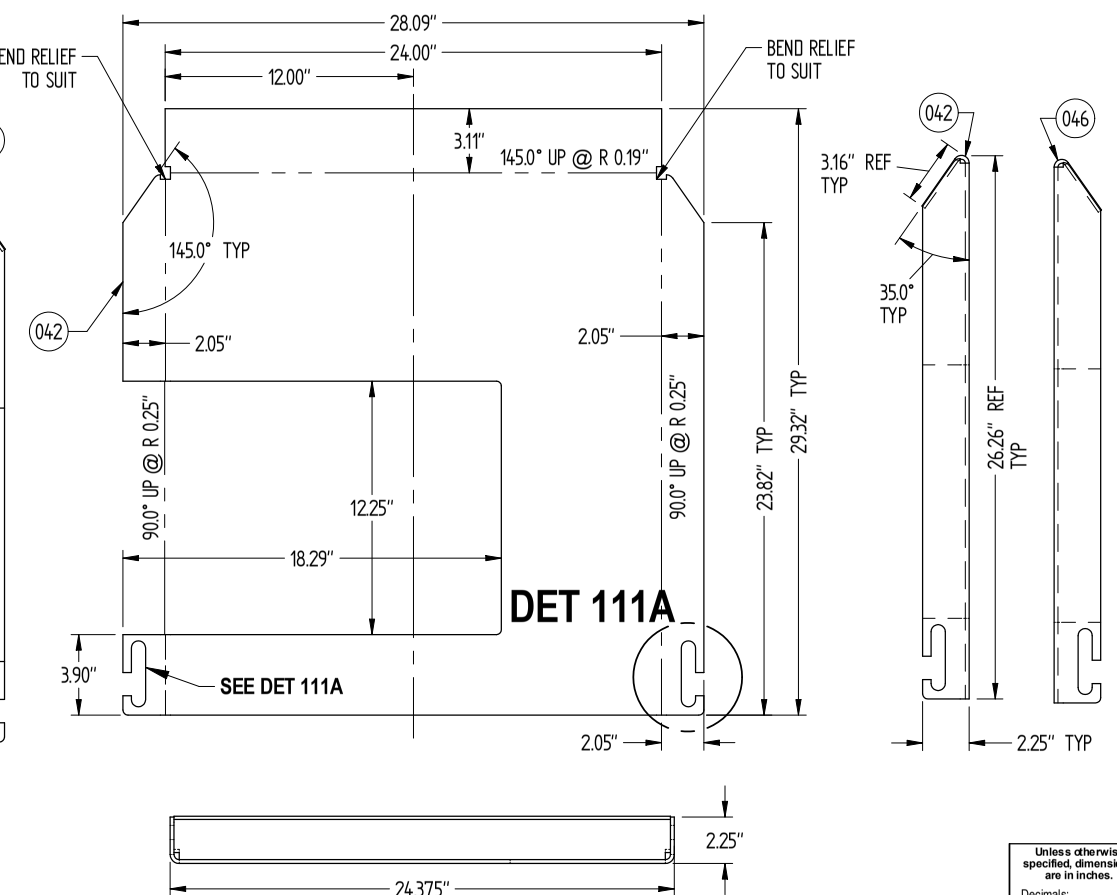

PLAN VIEW 112A
FLAT PATTERN & FORMED - PC 042 & PC 046
BEND PC 046 - OPPOSITE HAND

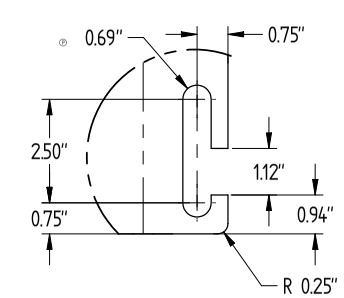

DETAIL VIEW 112A (113A)
NOTCH CUTOUT
PC 038, 041, 042, 046 (TYPICAL)

PUGET SOUND NAVAL SHIPYARD
CODE 2370
ENGINEERING DIVISION

NO DEVIATIONS SHALL BE MADE WITHOUT CODE 2370 APPROVAL

Unless otherwise specified, dimensions are in inches.
Decimals:
X.X = ±0.13
X.XX = ±0.025
X.XXX = ±0.003
X.XXXX = ±0.0005
Fractions = ±1/16 < 36"
Fractions = ±1/8 > 36"
Angles = ±0.5°
Drawing dimensional and geometric tolerances per ASME Y14.5M-1994

DRAWING NO.	FSR	RF #
2301-3696	2370-3696	N/A

TITLE
RAE COAMING MODIFICATIONS

SCALE		REV.
AS SHOWN	Sheet 23 of 30	A

TITLE: RAE COAMING MODIFICATIONS
REV: A
SHEET: 23
DWG. NO.: 2301-3696

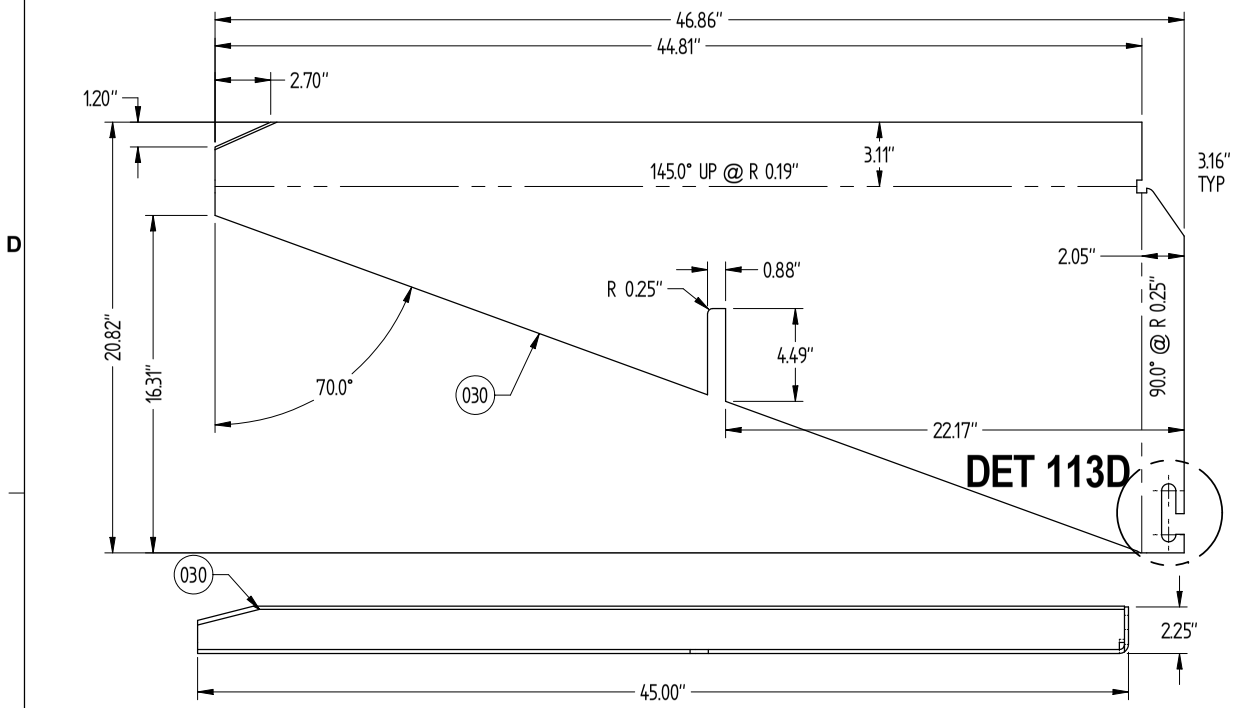

PLAN VIEW 119C
FLAT PATTERN & FORMED - PC 030 & PC 036
BEND OPPISITE HAND FOR PC 036 (A)

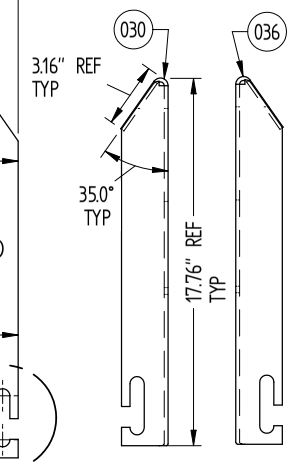

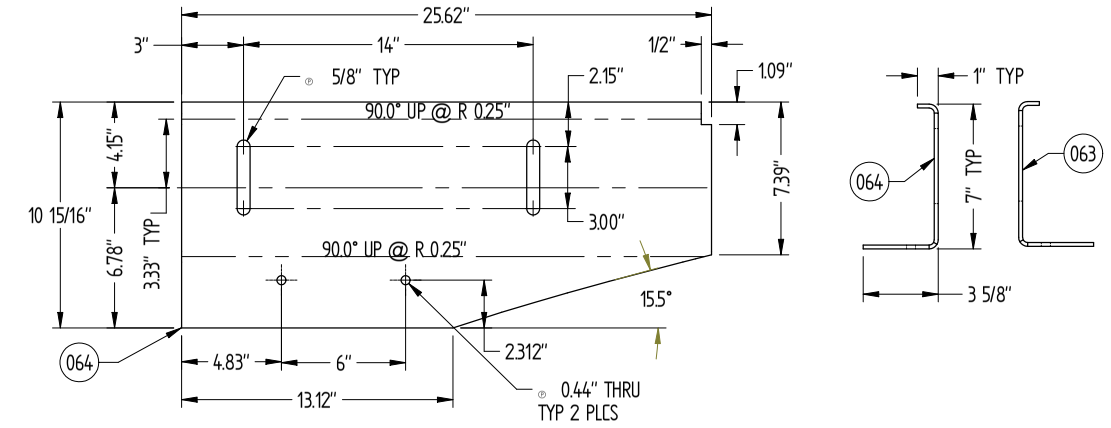

PLAN VIEW 117D
FLAT PATTERN & FORMED - PC 064 & PC 063
BEND OPPISITE HAND FOR PC 063 (A)

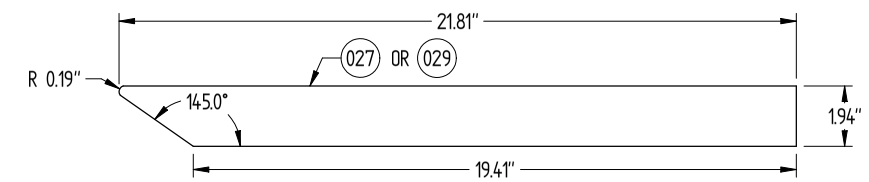

PLAN VIEW 117C
PC 027 & PC 029

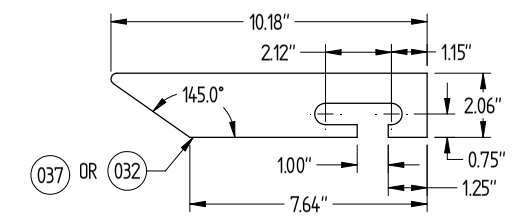

PLAN VIEW 116C
PC 032 & PC 037

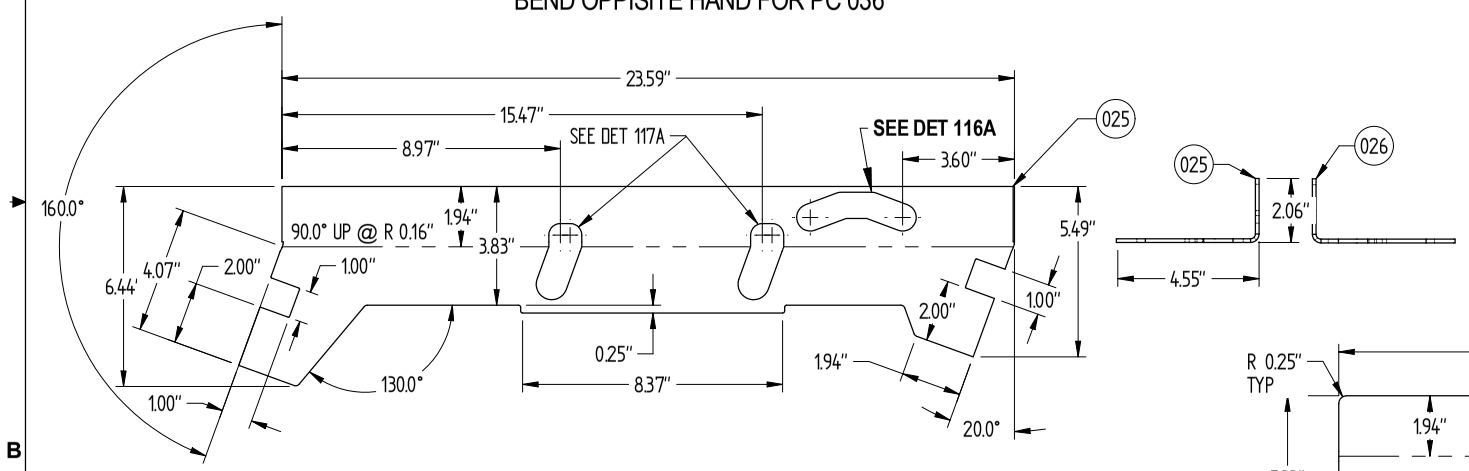

PLAN VIEW 119B
FLAT PATTERN & FORMED - PC 025 & PC 026
BEND OPPISITE HAND FOR PC 026 (A)

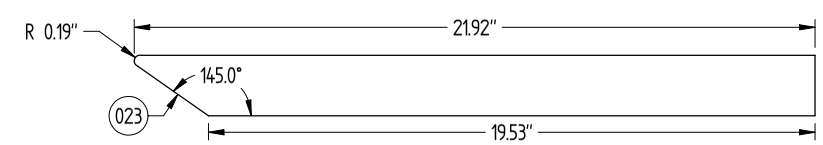

PLAN VIEW 117B
PC 023

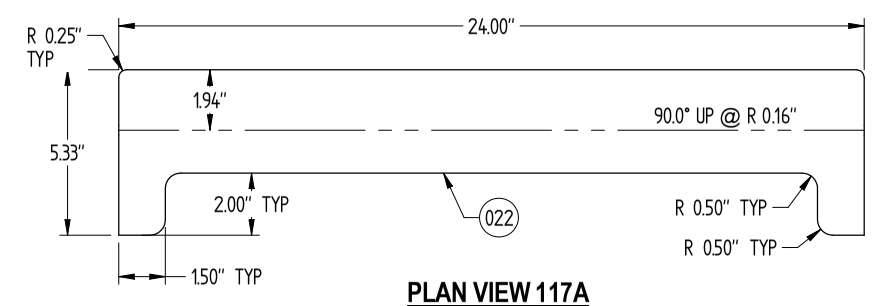

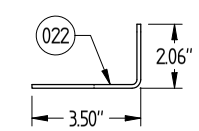

PLAN VIEW 117A
FLAT PATTERN - PC 022

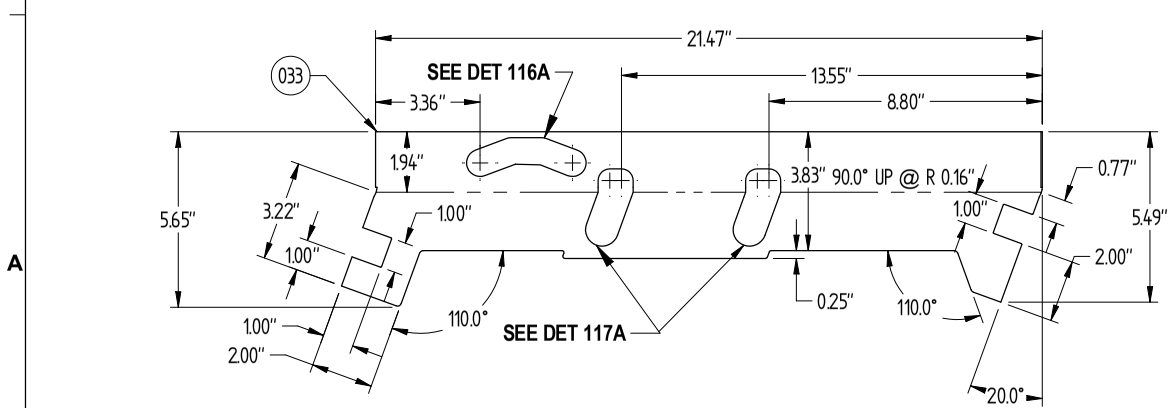

PLAN VIEW 119A
FLAT PATTERN & FORMED - PC 033 & PC 034
BEND OPPISITE HAND FOR PC 034 (A)

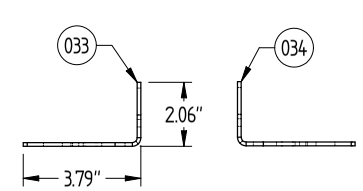

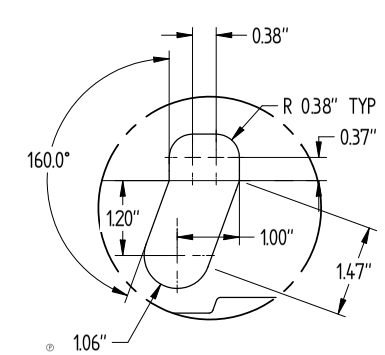

DETAIL VIEW 117A (119A, 119B)
CUT-OUT (TYPICAL)

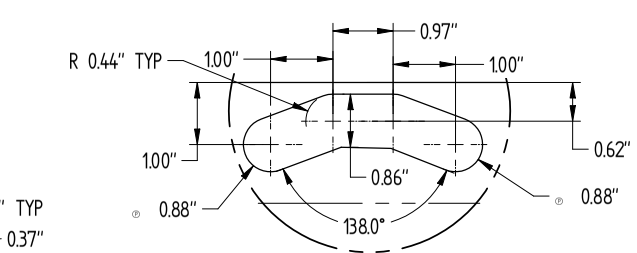

DETAIL VIEW 117A (119A, 119B)
CUT OUT (TYPICAL)

PUGET SOUND NAVAL SHIPYARD
CODE 2370
ENGINEERING DIVISION

NO DEVIATIONS SHALL BE MADE WITHOUT CODE 2370 APPROVAL

Unless otherwise specified, dimensions are in inches.
Decimals:
X.X = ±0.13
X.XX = ±0.025
X.XXX = ±0.003
X.XXXX = ±0.0005
Fractions = ±1/16 < 36"
Fractions = ±1/8 > 36"
Angles = ±0.5°
Drawing dimensional and geometric tolerances per ASME Y14.5M-1994

DRAWING NO.	FSR	RF#
2301-3696	2370-3696	N/A

TITLE
RAE COAMING MODIFICATIONS

SCALE: AS SHOWN | **Sheet 24 of 30** | REV. A

DWG. NO. 2301-3696 | TITLE RAE COAMING MODIFICATIONS | REV. A | SHEET 24

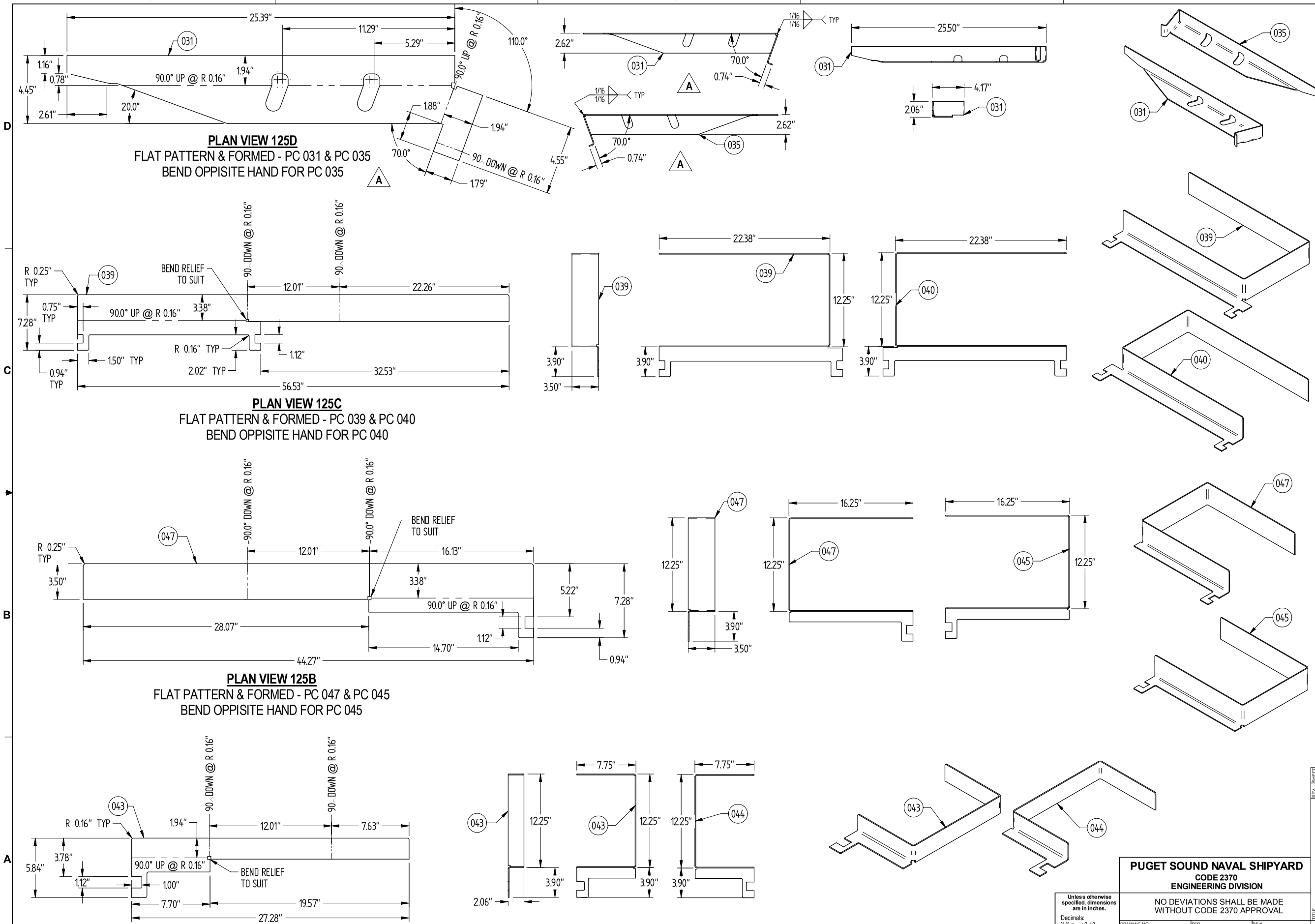

PLAN VIEW 125D
FLAT PATTERN & FORMED - PC 031 & PC 035
BEND OPPISITE HAND FOR PC 035

PLAN VIEW 125C
FLAT PATTERN & FORMED - PC 039 & PC 040
BEND OPPISITE HAND FOR PC 040

PLAN VIEW 125B
FLAT PATTERN & FORMED - PC 047 & PC 045
BEND OPPISITE HAND FOR PC 045

PLAN VIEW 125A
FLAT PATTERN & FORMED - PC 043 & PC 044
BEND OPPISITE HAND FOR PC 044

Unless otherwise specified, dimensions are in inches.
Decimals:
X.X = ±0.13
X.XX = ±0.025
X.XXX = ±0.003
X.XXXX = ±0.0005
Fractions = ±1/16 < 36"
Fractions = ±1/8 > 36"
Angles = ±0.5°
Drawing dimensional and geometric tolerances per: ASME Y14.5M-1994

PUGET SOUND NAVAL SHIPYARD
CODE 2370
ENGINEERING DIVISION

NO DEVIATIONS SHALL BE MADE WITHOUT CODE 2370 APPROVAL

DRAWING NO.	FSR	RF #
2301-3696	2370-3696	N/A

TITLE
RAE COAMING MODIFICATIONS

SCALE: AS SHOWN | **Sheet 25 of 30** | REV. **A**

DWG. NO. 2301-3696 | TITLE RAE COAMING MODIFICATIONS | REV. A | SHEET 25

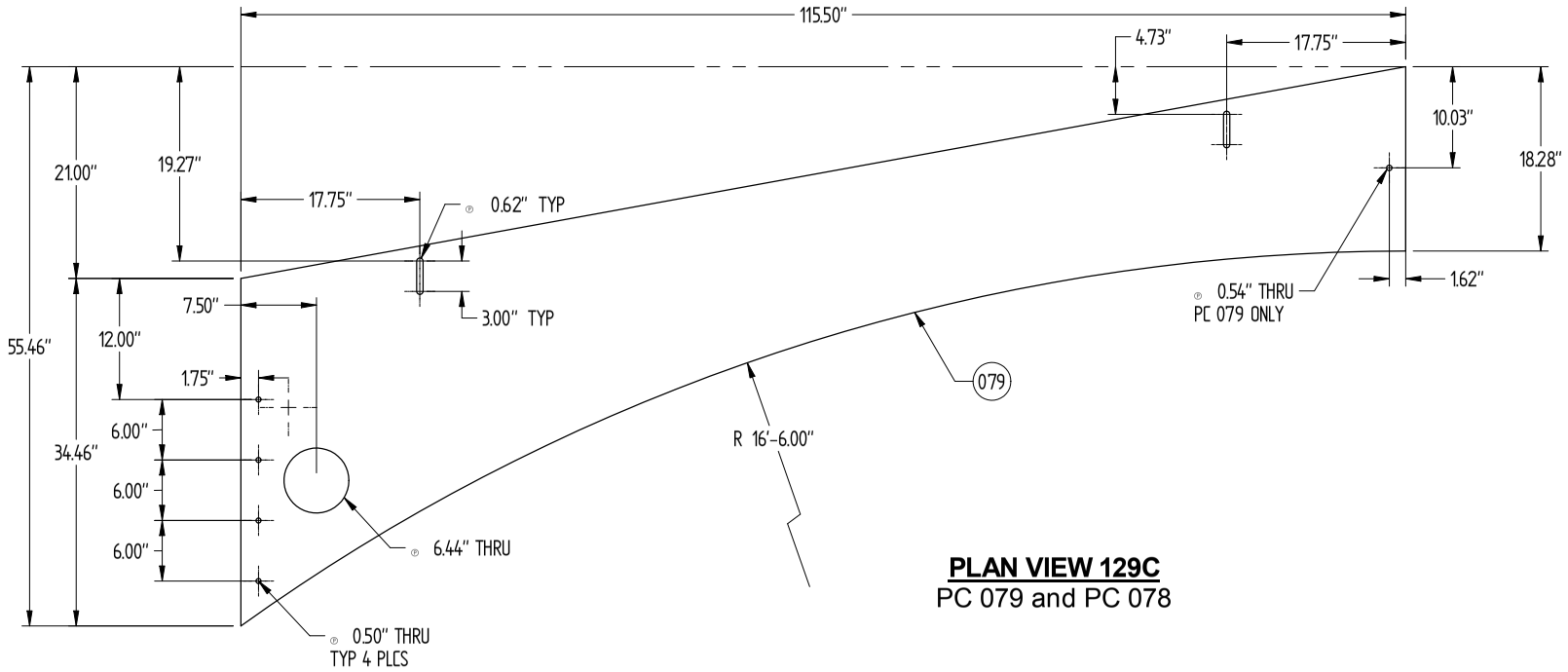

PLAN VIEW 129C
PC 079 and PC 078

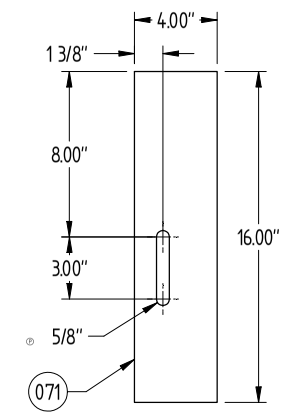

PLAN VIEW 127D
PC 071

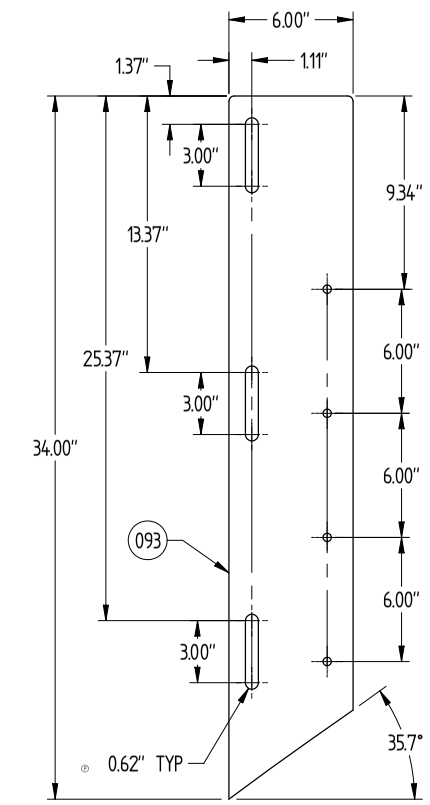

PLAN VIEW 126C
PC 093

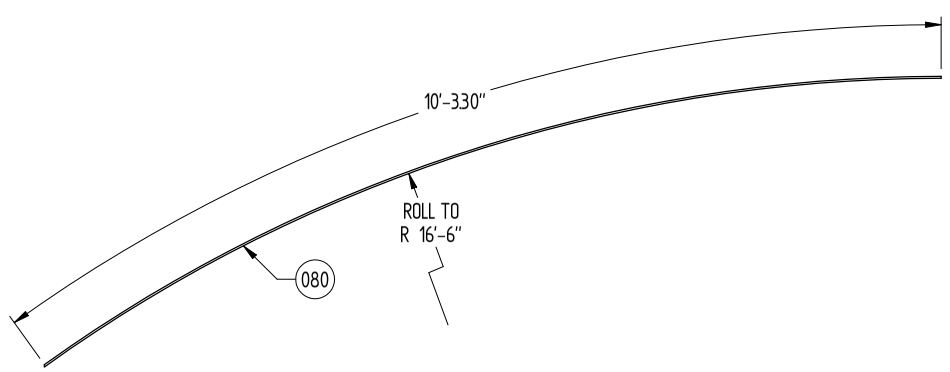

PLAN VIEW 129B
PC 080

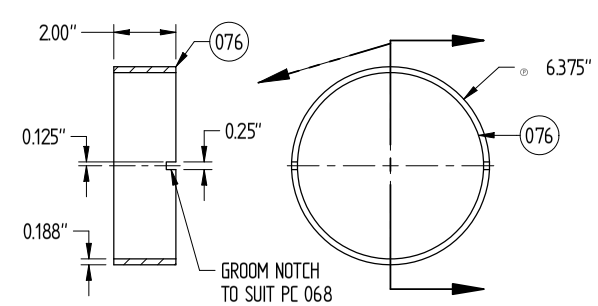

PLAN VIEW 128B
PC 076

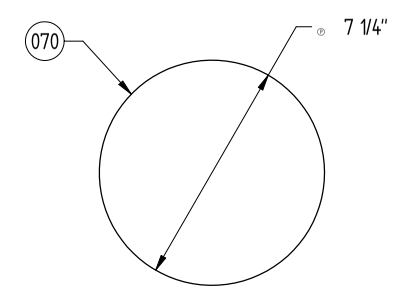

PLAN VIEW 127B
PC 070

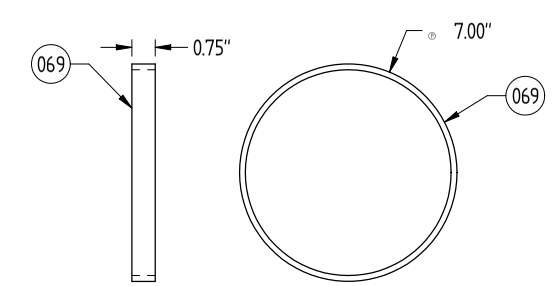

PLAN VIEW 126B
PC 069

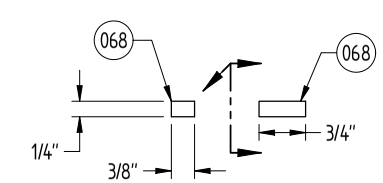

PLAN VIEW 126A
PC 068

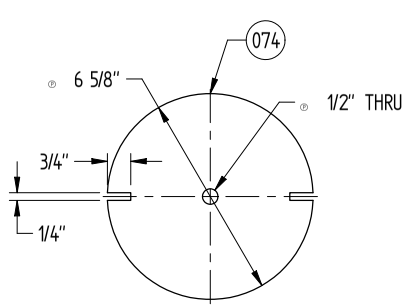

PLAN VIEW 130A
PC 074

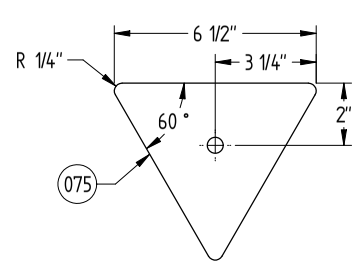

PLAN VIEW 129A
PC 075

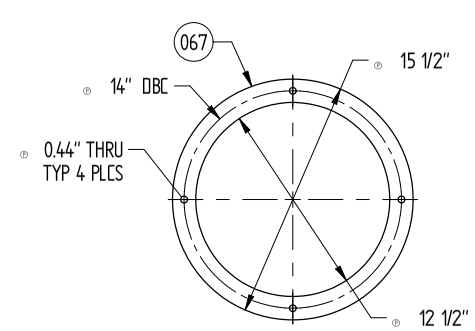

PLAN VIEW 128A
PC 067

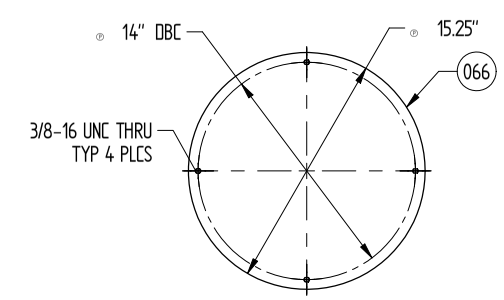

PLAN VIEW 127A
PC 066

PUGET SOUND NAVAL SHIPYARD
CODE 2370
ENGINEERING DIVISION

NO DEVIATIONS SHALL BE MADE
WITHOUT CODE 2370 APPROVAL

Unless otherwise specified, dimensions are in inches.
Decimals:
X.X = ±0.13
X.XX = ±0.025
X.XXX = ±0.003
X.XXXX = ±0.0005
Fractions = ±1/16 < 36"
Fractions = ±1/8 > 36"
Angles = ±0.5°
Drawing dimensional and geometric tolerances per ASME Y14.5M-1994

DRAWING NO.	FSR	RF #
2301-3696	2370-3696	N/A

TITLE
RAE COAMING MODIFICATIONS

SCALE AS SHOWN | **Sheet 26 of 30** | REV. **A**

DWG. NO. 2301-3696 | TITLE RAE COAMING MODIFICATIONS | REV. A | SHEET 26

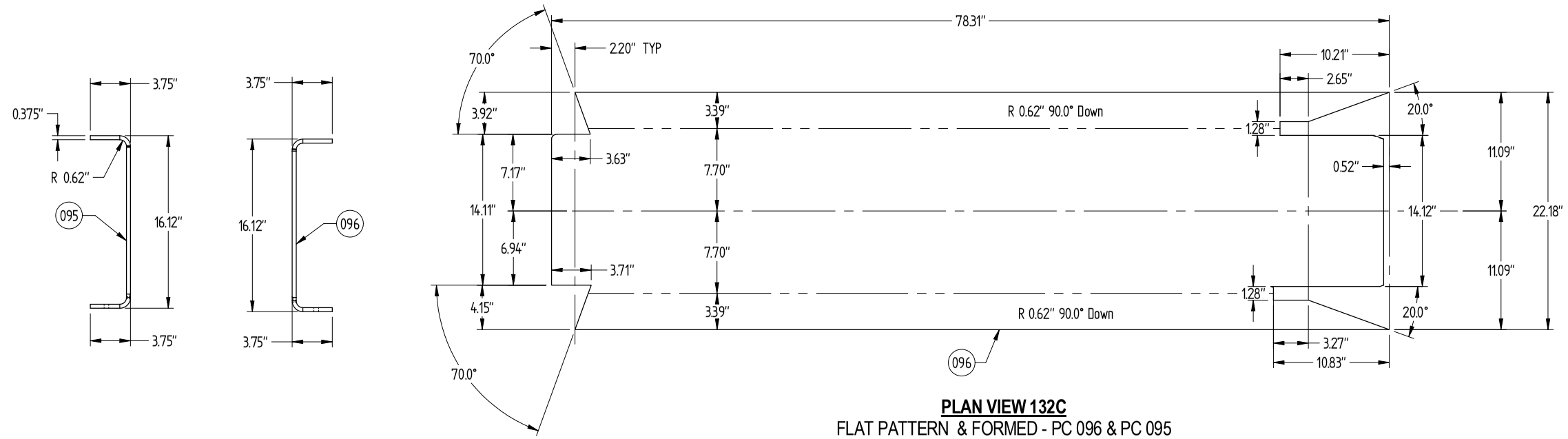

PLAN VIEW 132C
FLAT PATTERN & FORMED - PC 096 & PC 095
BEND OPPISITE HAND FOR PC 095

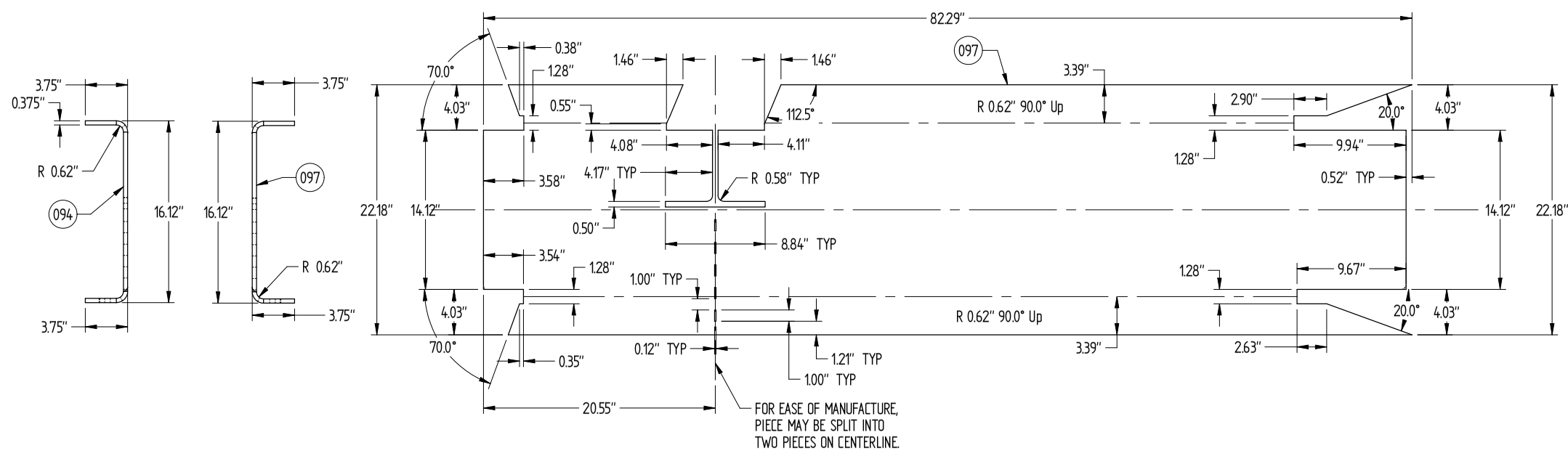

PLAN VIEW 132B
FLAT PATTERN & FORMED - PC 097 & PC 094
BEND OPPISITE HAND FOR PC 094

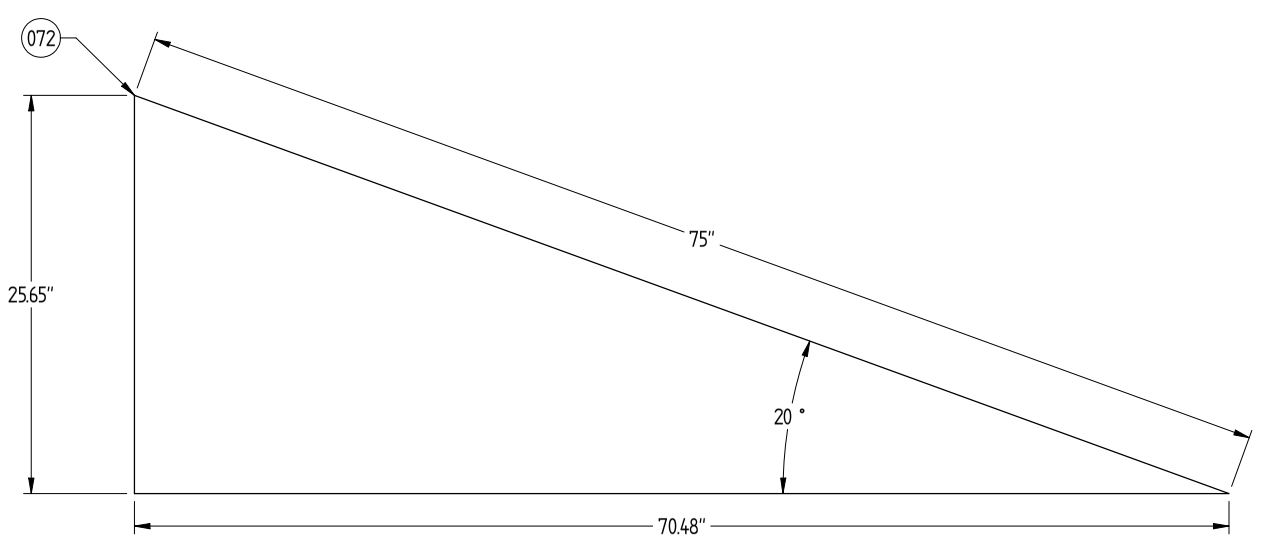

PLAN VIEW 134A
PC 072

PUGET SOUND NAVAL SHIPYARD
CODE 2370
ENGINEERING DIVISION

NO DEVIATIONS SHALL BE MADE
WITHOUT CODE 2370 APPROVAL

Unless otherwise specified, dimensions are in inches.
Decimals:
X.X = ±0.13
X.XX = ±0.025
X.XXX = ±0.003
X.XXXX = ±0.0005
Fradions = ±1/16 < 36"
Fractions = ±1/8 > 36"
Angles = ±0.5°
Drawing dimensional and geometric tolerances per ASME Y14.5M-1994

DRAWING NO.	FSR	RF #
2301-3696	2370-3696	N/A

TITLE
RAE COAMING MODIFICATIONS

SCALE AS SHOWN | **Sheet 27 of 30** | REV. **A**

DWG. NO. 2301-3696 | TITLE RAE COAMING MODIFICATIONS | REV. A | SHEET 27

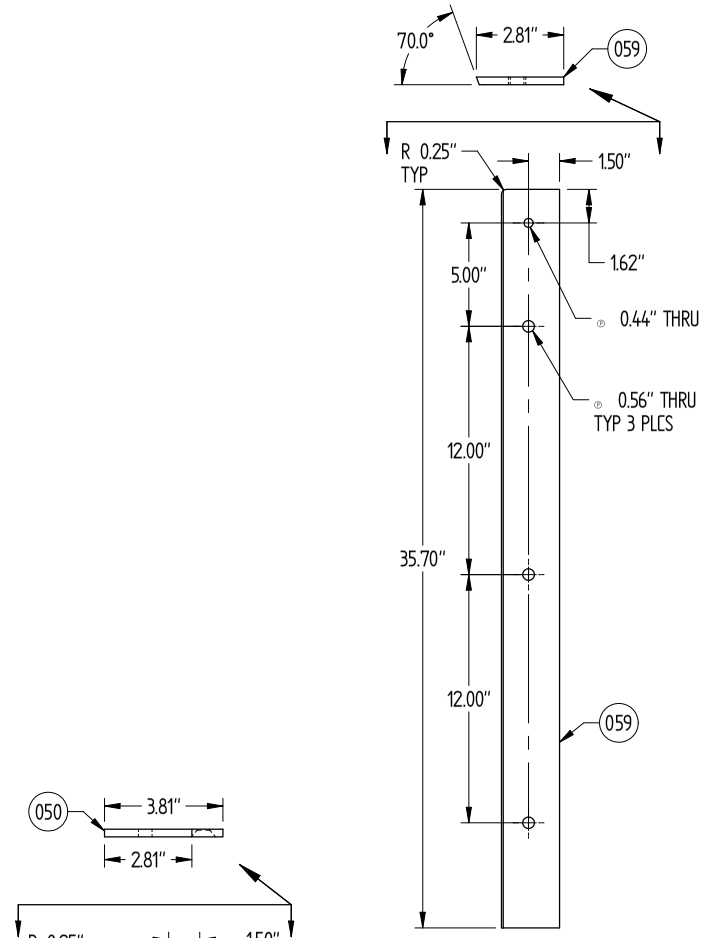

PLAN VIEW 140C
END PLATE - PC 059

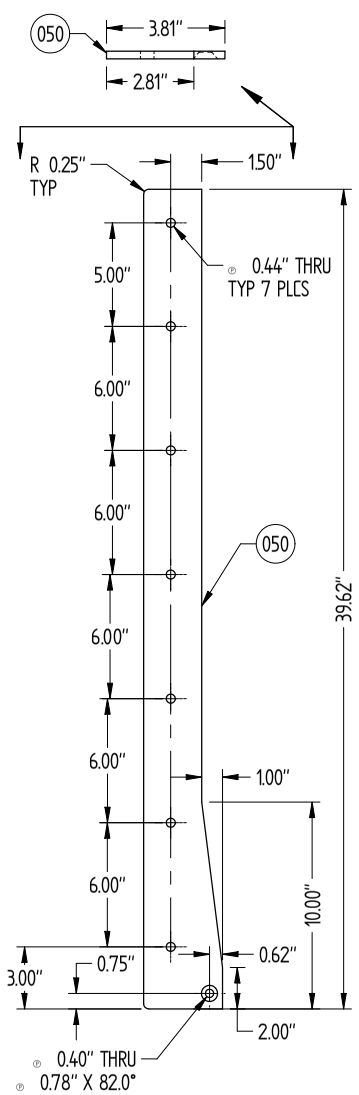

PLAN VIEW 140A
END PLATE - PC 050

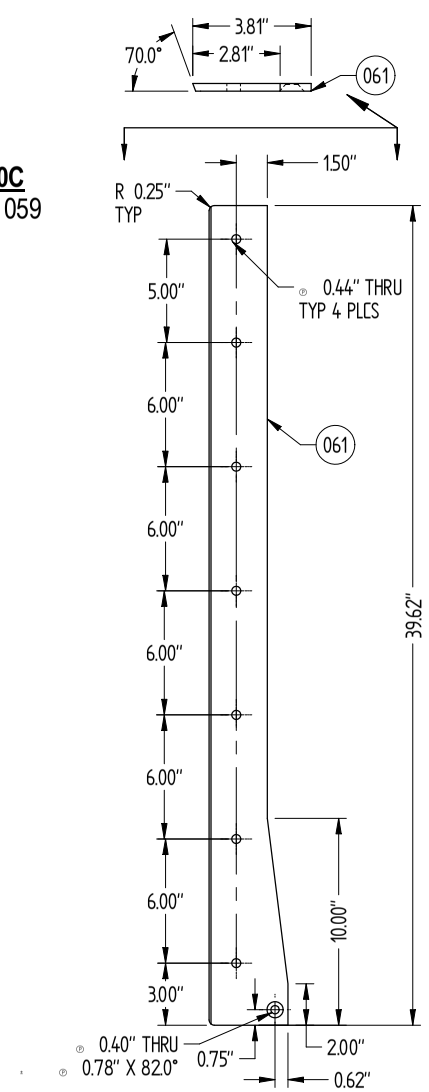

PLAN VIEW 139A
END PLATE - PC 061

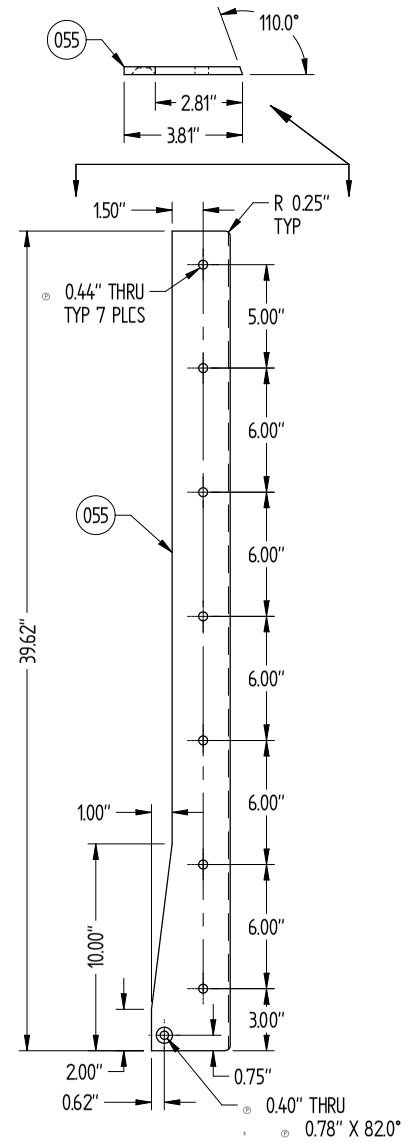

PLAN VIEW 138B
END PLATE - PC 055

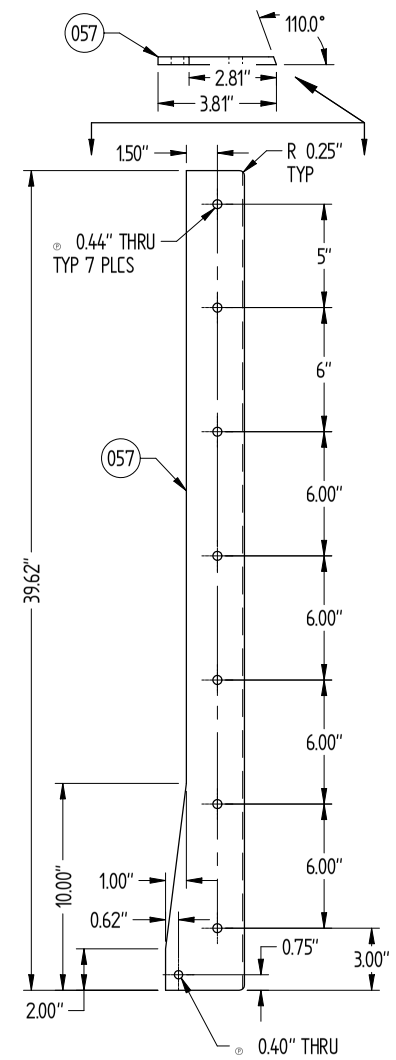

PLAN VIEW 137A
MID PLATE - PC 057

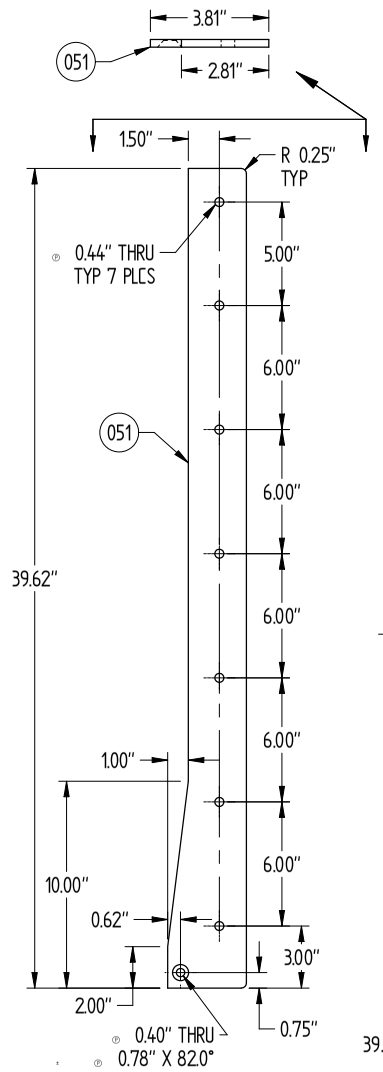

PLAN VIEW 136B
END PLATE - PC 051

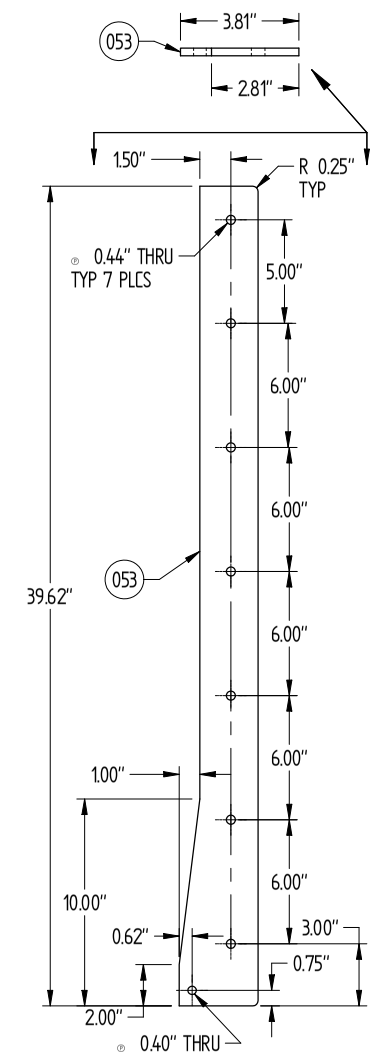

PLAN VIEW 136A
MID PLATE - PC 053

Unless otherwise specified, dimensions are in inches. Decimals: X.X = ±0.13, X.XX = ±0.025, X.XXX = ±0.003, X.XXXX = ±0.0005, Fractions = ±1/16 < 36", Fractions = ±1/8 > 36", Angles = ±0.5°. Drawing dimensional and geometric tolerances per ASME Y14.5M-1994	**PUGET SOUND NAVAL SHIPYARD** CODE 2370 ENGINEERING DIVISION
	NO DEVIATIONS SHALL BE MADE WITHOUT CODE 2370 APPROVAL
	DRAWING NO. **2301-3696** · FSR **2370-3696** · REF # **N/A**
	TITLE **RAE COAMING MODIFICATIONS**
	SCALE AS SHOWN · **Sheet 28 of 30** · REV. **A**

SHEET 28 · REV. A · TITLE RAE COAMING MODIFICATIONS · DWG. NO. 2301-3696

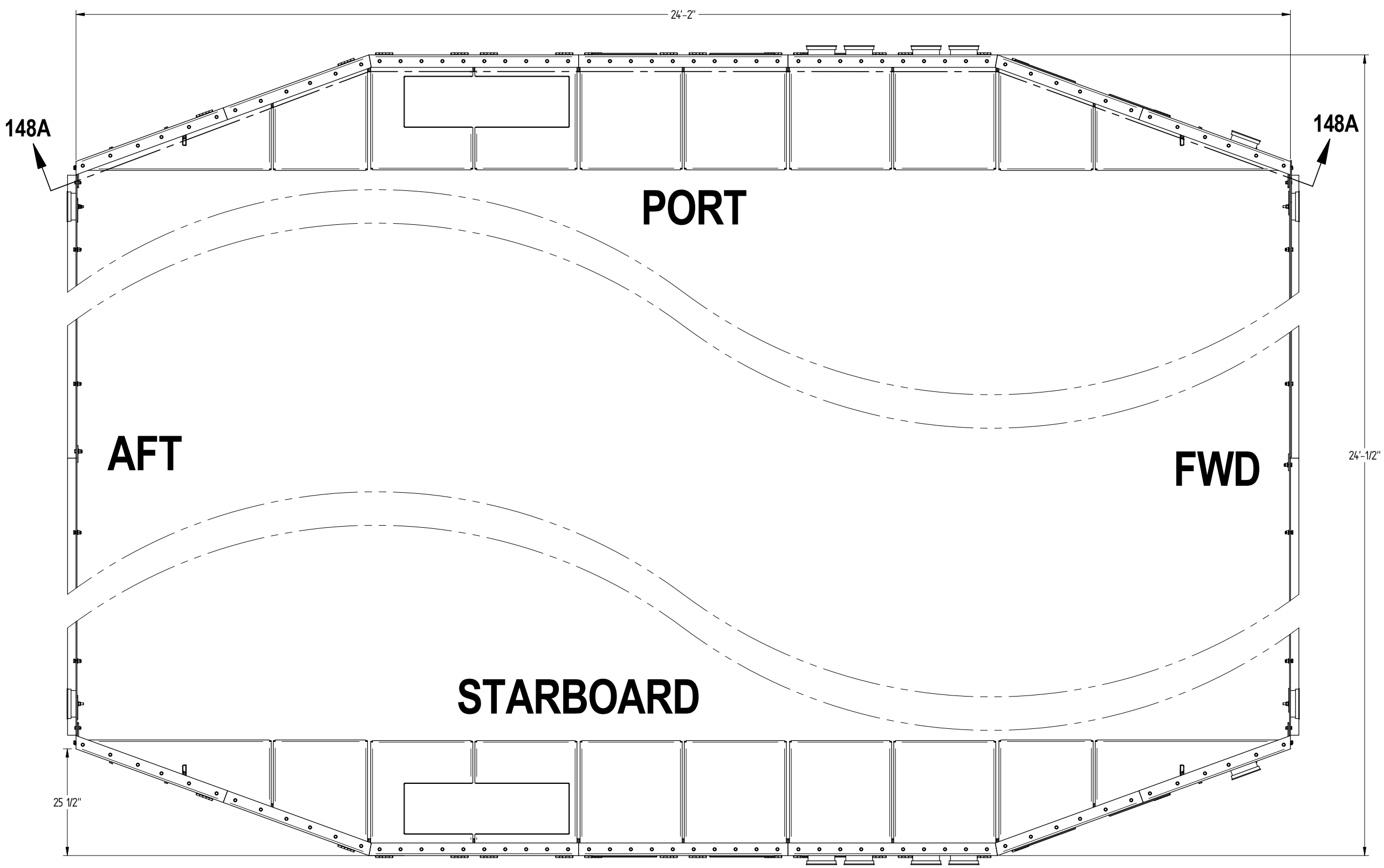

A

PLAN VIEW 143A

RAE COAMING ASSEMBLY
FINAL OVERAL DIMESIONS

Unless otherwise specified, dimensions are in inches. Decimals: X.X = ±0.13 X.XX = ±0.025 X.XXX = ±0.003 X.XXXX = ±0.0005 Fractions = ±1/16 < 36" Fractions = ±1/8 > 36" Angles = ±0.5° Drawing dimensional and geometric tolerances per ASME Y14.5M-1994	**PUGET SOUND NAVAL SHIPYARD** **CODE 2370** **ENGINEERING DIVISION** NO DEVIATIONS SHALL BE MADE WITHOUT CODE 2370 APPROVAL
	DRAWING NO. **2301-3696** · FSR **2370-3696** · RF # **N/A**
	TITLE **RAE COAMING MODIFICATIONS**
	SCALE AS SHOWN · **Sheet 29 of 30** · REV. **A**

TITLE: RAE COAMING MODIFICATIONS · REV: A · SHEET: 29 · DWG. NO. 2301-3696

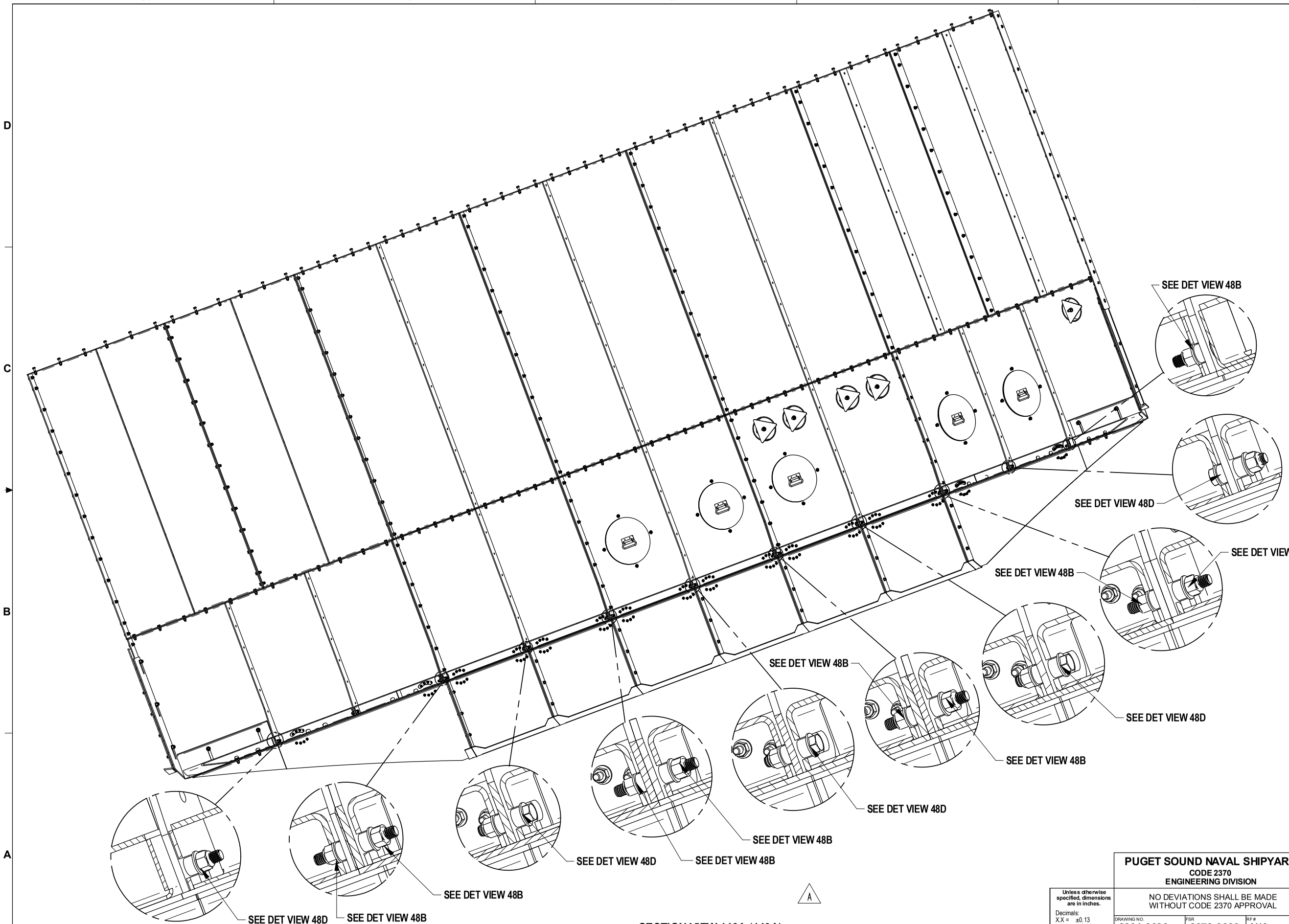

SECTION VIEW 148A (143A)
RAE COAMING ASSEMBLY
PLATFORM PANEL CONNECTIONS

PUGET SOUND NAVAL SHIPYARD
CODE 2370
ENGINEERING DIVISION

NO DEVIATIONS SHALL BE MADE
WITHOUT CODE 2370 APPROVAL

Unless otherwise specified, dimensions are in inches.
Decimals:
X.X = ±0.13
X.XX = ±0.025
X.XXX = ±0.003
X.XXXX = ±0.0005
Fractions = ±1/16 < 36"
Fractions = ±1/8 > 36"
Angles = ±0.5°
Drawing dimensional and geometric tolerances per ASME Y14.5M-1994

DRAWING NO.	FSR	RF #
2301-3696	2370-3696	N/A

TITLE
RAE COAMING MODIFICATIONS

SCALE AS SHOWN | **Sheet 30 of 30** | REV. **A**

DWG. NO. 2301-3696 | TITLE RAE COAMING MODIFICATIONS | REV. A | SHEET 30