## GENERAL NOTES

1. THIS DRAWING PROVIDES INSTRUCTIONS TO MANUFACTURE ONE (1) SET OF FOUR (4) PVOD BASE RING QUADRANTS. THE EQUIPMENT WILL BE USED IN AN ENVIRONMENT THAT HAS CLEANLINESS REQUIREMENTS. THEREFORE, CONTRACTOR SHALL ENSURE ALLOWANCES ARE MADE FOR GROOMING ASSEMBLED STRUCTURE AS DESCRIBED IN THIS DRAWING TO FACILITATE CLEANING.
2. WHEN WELDING STANDARDS, MIL-SPECS, OR SIMILAR INSTRUCTIONS ARE NOTED ON THIS DRAWING, THE LATEST REVISION SHALL BE IN EFFECT UNLESS OTHERWISE AUTHORIZED BY PSNS & IMF.
3. UNLESS SPECIFIED OTHERWISE ON THIS DRAWING, ALL TOLERANCES SHALL BE AS INDICATED IN THE DRAWING INFORMATION BLOCK LOCATED AT THE BOTTOM RIGHT CORNER OF EACH PAGE.
4. ORIGINS OF RELATED VIEWS ARE SHOWN IN PARENTHESIS BESIDE VIEWS WHERE DEEMED USEFUL FOR INFORMATION PURPOSES.
5. MATERIAL SUBSTITUTIONS ARE AUTHORIZED PROVIDED THE MATERIAL MEETS OR EXCEEDS THE MECHANICAL, PHYSICAL, AND DIMENSION PROPERTIES SPECIFIED IN THIS DRAWING. STAINLESS STEEL TYPES 304, 304L, 316, 316L, AND 321 ARE CONSIDERED EQUIVALENT WHEN MATERIAL IS GREATER THAN 1/8" THICK. CONTACT PSNS & IMF PRIOR TO INVOKING THIS ALLOWANCE.
6. BREAK ALL SHARP EDGES TO 1/32" CHAMFER (MINIMUM). SURFACE FINISH OF MACHINED SURFACES SHALL BE 250 MICRO-INCHES OR BETTER UNLESS OTHERWISE SPECIFIED.
7. THE USE OF SLOT AND TABS TO INDEX POSITION OF PARTS FOR MANUFACTURE IS ALLOWED. SLOT-TAB JOINT WILL REQUIRE PLUG WELDING AND GROUND FLUSH.
8. THE USE OF ETCHING ON MATERIAL FOR ALIGNMENT IS ALSO ALLOWED.
9. FOR EASE OF IDENTIFICATION DURING AND AFTER FABRICATION, THE PIECE NUMBER MAY BE LASER ETCHED ONTO THE MATERIAL.
10. ITEMS THAT CAN NOT BE BENT, AS SHOWN, MAY BE MANUFACTURED IN TWO OR THREE PIECES AND WELDED TOGETHER PER NOTE 11(H) TO MEET THE DIMENSIONS OF THE DRAWING.
11. **WELDING REQUIREMENTS**:
    - A. WELDING SHALL BE IN ACCORDANCE WITH AWS D1.6.
    - B. WELDS ASSOCIATED WITH LIFTING ATTACHMENTS SHALL BE MADE TO THE SIZE SHOWN. ALL OTHER WELDS SHOWN ARE THE MINIMUM SIZE. FINAL WELD SIZE SHALL HAVE A SMOOTH CONTOUR. CREVICES AT TOES OF WELDS ARE NOT ACCECTABLE.
    - C. MINIMUM BEVEL ANGLE ON ALL BEVEL WELDS IS 45 DEGREES PER SINGLE BEVEL. WHEN WELD SIZE FOR GROOVE WELDS IS NOT SPECIFIED, THE REQUIRED MINIMUM EFFECTIVE THROAT IS THE DEPTH OF THE GROOVE.
    - D. CORNERS MAY BE CHAMFERED TO CLEAR EXISTING PREVIOUSLY DEPOSITED WELDS. CLOSE CHAMFERS BY WELDING WHEN INVOKING THIS ALLOWANCE.
    - E. WELDS SHALL BE SEQUENCED TO MINIMIZE DISTORTION. IF WELDS ARE APPLIED LARGER THAN SHOWN, TAKE PRECAUTIONS AS NECESSARY TO CONTROL HEAT INPUT TO MINIMIZE POTENTIAL FOR DISTORTION. IF DISTORTION DOES OCCUR, STRAIGHTENING SHALL BE PERFORMED PER AWS D1.6.
    - F. VISUALLY INSPECT WELDS PER AWS D1.6.
    - G. WELD SURFACE FINISH SHALL SATISFY NOTE 12.
    - H. CONTINUOUS FULL THICKNESS CORNER AND BUTT WELD SPLICES IN PLATE, PIPE, OR FLAT BAR ARE PERMITTED TO FACILITATE ASSEMBLY. ANY SPLICES MADE, UNLESS OTHERWISE NOTED, SHALL BE FULL PENETRATION AND SHALL BE IN ACCORDANCE WITH AWS D1.6.
    - I. IN ADDITION TO THOSE CLEARLY SHOWN, SEAL WELD CREVICED JOINTS WITH WELD MATERIAL TO ELIMINATE CREVICES TO ELIMINATE JOINTS THAT COULD TRAP LOOSE MATERIALS THAT WOULD BE UNDESIRABLE IN A CLEAN AREA (I.E. DIRT, METAL SHAVINGS, ETC.). SEAL WELDS ARE NOT CONSIDERED STRUCTURAL WELDS AND NEED NOT SATISFY SIZE OR PROFILE REQUIREMENTS OF AWS D1.6. HOWEVER, WELDS SHALL MEET THE SURFACE FINISH REQUIREMENTS OF NOTE 12.
    - J. OPEN ENDS OF PIPE OR TUBE SHALL BE CAPPED WITH SIMILAR MATERIAL AND SEAL WELDED TO CLOSE OPENING.
    - K. ANY WELDS OR BASE MATERIAL THAT SPECIFIES LIQUID PENETRANT TESTS (PT) SHALL BE PT INSPECTED PER NAVSEA TECHNICAL PUBLICATION T9074-AS-GIB-010/271. ACCEPTANCE CRITERIA IS MIL-STD-2035, FORGINGS AND WROUGHT MATERIAL FOR BASE METAL, AND CLASS (3) FOR WELDS. SEE SHEET 19 FOR LOAD TEST AND NDT REQUIREMENTS. ***CONTRACTOR(S) PERFORMING NDT PROCEDURES IN ACCORDANCE WITH TECHNICAL PUBLICATION T9074-AS-GIB-010/271 ARE REQUIRED TO DEVELOP AND MAINTAIN A WRITTEN PROCEDURE THAT HAS BEEN QUALIFED TO MEET THE REQUIREMENTS OF TECHNICAL PUBLICATION T9074-AS-GIB-010/271. A COPY OF THE QUALIFIED PROCEDURE SHALL BE INCLUDED WITH THE NDT DOCUMENTATION REQUIRED BY THIS DRAWING (FOR ENGINEERING REVIEW)***.
12. **SURFACE FINISH**:
    - A. WELDED SURFACES SHALL BE FREE OF CRACKS, CRATERS, BURRS, SHARP EDGES AND WELD SPLATTER. THE WELD SURFACE SHALL GENERALLY BE SMOOTH TO THE TOUCH. CONTOUR GRINDING MAY BE NECESSARY DEPENDING ON THE WELD PROCESS, MATERIAL, AND DESIGN. THE REMAINING SURFACES SHALL BE FREE OF WELD SPLATTER, DEEP SCRATCHES, BURRS, DIRT, & LOOSE RUST. IN GENERAL ALL SURFACES SHALL BE SMOOTH ENOUGH TO PERMIT WIPING SURFACES WITH CLEANING CLOTH WITHOUT SNAGGING THE CLOTH.
    - B. DO NOT PAINT OR MARK STAINLESS STEEL WITH ANY PRODUCTS THAT CANNOT BE COMPLETELY REMOVED WITH A CLEANING CLOTH.
    - C. GLASS BEAD BLASTING SHALL BE PERFORMED BY CONTRACTOR TO IMPROVE SURFACE FINISH OF STAINLESS STEEL MEMBERS OF STRUCTURE FOLLOWING INITIAL GROOMING. PRIOR TO GLASS BEAD BLASTING, MASK THREADED HOLES AND BLAST STAINLESS STEEL TO A SATIN FINISH. ***DO NOT USE METAL SHOT***. ENSURE ALL GLASS BEAD BLAST MATERIAL IS CLEANED FROM STRUCTURE.
13. **BENDING**: FOR PIECES OF MATERIAL LIST THAT INVOLVE BENDING OF MATERIAL, THE MATERIAL LIST OF THIS DRAWING PROVIDES THE APPROXIMATE LENGTH OF THE COMPONENTS THAT WILL REQUIRE BENDING. THE BENDING PROCESS USED MAY REQUIRE ADDITIONAL MATERIAL FOR CLAMPING DURING BENDING OPERATIONS. CONTRACTOR SHALL PLAN FOR ADDITIONAL MATERIAL AS NECESSARY TO ACHIEVE THE MATERIAL PROFILES SPECIFIED IN THIS DRAWING.
14. **WEIGHING, LOAD TEST AND NDT**: WEIGH, LOAD TEST, AND PERFORM NDT AS SHOWN ON SHEET 19 OF THIS DRAWING.
15. **CHECK-FIT OF COMPONENTS**: CONTRACTOR SHALL PERFORM THE FOLLOWING CHECK-FITS (AS A MINIMUM).
    - A. AFTER LOAD TEST AND NDT, ASSEMBLE EACH RING QUADRANT WITH THE COVER PLATES AND LEG ASSEMBLIES. MATCH MARKING SHALL BE BY STAMPING OR VIBRATOOL.
16. **SHIPPING**: ENSURE ALL COMPONENTS ARE CLEANED PRIOR TO SHIPPING (I.E. ENSURE ALL COMPONENTS ARE WIPED CLEAN OF LOOSE DIRT, OIL, GRIT, ETC.) ANY FASTENERS OR COMPONENTS SHIPPED SEPARATE FROM THE STRUCTURE SHALL BE PACKAGED IN A MANNER THAT WILL PREVENT DAMAGE DURING SHIPMENT AND SHALL BE CLEARLY MARKED WITH DRAWING DWG 2301-3853 AND PIECE NUMBERS TO ENSURE MATERIALS CAN BE READILY IDENTIFIED UPON DELIVERY.

**LIST OF MATERIALS**

| PC# | QTY | DESCRIPTION | MATERIAL | PANEL | REMARKS |
|---|---|---|---|---|---|
| 01 | 11 | BAR, ROUND, 1-3/4" OD x 9/16" LG | Stainless Steel, 304 | 82A | MACHINE TO FINAL DIMENSIONS |
| 02 | 1 | BAR, ROUND, 1-3/4" OD x 9/16" LG | Stainless Steel, 304 | 83A | MACHINE TO FINAL DIMENSIONS |
| 03 | 2 | BAR, ROUND, 1 3/4" DIA x 3/4" LG | Stainless Steel, 304 | 80D | MACHINE TO FINAL DIMENSIONS |
| 04 | 32 | BAR, ROUND, 3/4" OD x 7/8" LG | Stainless Steel, 304 | 81A | MACHINE TO FINAL DIMENSIONS |
| 05 | 20 | NUT, HEX WITH NYLON INSERT, 5/16-18 UNC | Stainless steel, 18-8 | 84A | McMaster Carr # 91831A030 or EQUIV |
| 06 | 2 | NUT, HEX, 1/2"-13 UNC | Stainless Steel, 304 | 79B | |
| 07 | 1 | PL, 3/16 | Stainless Steel | 84B | |
| 08 | 15 | PL, 3/16 | Stainless Steel | 81C | |
| 09 | 15 | PL, 3/16" | Stainless steel | 83D | |
| 10 | 1 | PL, 3/16" | Stainless steel | 39B | |
| 11 | 1 | PL, 3/16" | Stainless steel | 64A | |
| 12 | 1 | PL, 3/16" | Stainless steel | 52B | |
| 13 | 1 | PL, 3/16" | Stainless steel | 72D | |
| 14 | 1 | PL, 3/16" | Stainless steel | 39C | |
| 15 | 1 | PL, 3/16" | Stainless steel | 64C | |
| 16 | 1 | PL, 3/16" | Stainless steel | 54B | |
| 17 | 1 | PL, 3/16" | Stainless steel | 74C | |
| 18 | 1 | PL, 3/16" | Stainless steel | 37A | |
| 19 | 1 | PL, 3/16" | Stainless steel | 62B | |
| 20 | 1 | PL, 3/16" | Stainless steel | 49B | |
| 21 | 1 | PL, 3/16" | Stainless steel | 74A | |
| 22 | 1 | PL, 3/16" | Stainless steel | 37C | |
| 23 | 1 | PL, 3/16" | Stainless steel | 62C | |
| 24 | 1 | PL, 3/16" | Stainless steel | 46B | |
| 25 | 1 | PL, 3/16" | Stainless steel | 72B | |
| 26 | 32 | SCREW, CAPTIVATING, FLAT HEAD, 1/4-20 UNC x 1 1/4" LG | Stainless Steel | 8A | ACCURATE SCREW MACHINE #P114225 1.25 SS1 OR EQUIV |
| 27 | 2 | SHEET, 11 GA | Stainless Steel | 76B | |
| 28 | 2 | STUD LEVELING FOOT, 1/2-13 UNC, 4" STUD, 5 1/8" OL | Stainless Steel | 79B | CarrLane # 8SLF4S or EQUIV |
| 29 | 20 | STUD, FULLY THREADED, 5/16-18 UNC x 1" LG | Stainless Steel, 316 | 84A | McMaster Carr # 90575A583 or EQUIV |
| 30 | 2 | TUBING, ROUND, 1 1/2" OD x .120" WT x 10" LG | Stainless steel | 79B | |
| 31 | 20 | WASHER, FLAT, SAE/USS STANDARD, 5/16" | Stainless Steel | 84A | McMaster Carr # 96659A107 or EQUIV |

## REFERENCES

1. AWS D1.6; STRUCTURAL WELDING CODE – STAINLESS STEEL
2. NAVSEA TECHNICAL PUBLICATION T9074-AS-GIB-010/271; REQUIREMENTS FOR NON-DESTRUCTIVE TEST METHODS
3. MIL-STD-2035; NONDESTRUCTIVE TESTING ACCEPTANCE CRITERIA.
4. PVOD BASE RING QUADRANTS; PSNS & IMF EVALUATION OF LIFT ATTACHMENTS (FOR PSNS & IMF USE ONLY).
5. PSNS DWG. 2301-3411; TORQUED-BASED PROOF TEST FOR SAFETY HOIST RING LIFT HOLES AND NDT FOR LIFTING ATTACHMENTS

**DISTRIBUTION STATEMENT:** *N/A*

**ADC Review**

| SIGNATURE | DATE |
|---|---|
| /S/ Jim Byrnes | 7-23-15 |

**CONCURRENCE**

| CODE | SIGNATURE | DATE |
|---|---|---|
| | | |
| | | |
| | | |
| | | |
| | | |
| | | |

**/S/ SIGNATURE ON FILE** **APPROVAL**

| | SIGNATURE | DATE |
|---|---|---|
| BRANCH SUPV. | /S/ Jim Byrnes | 7-23-15 |
| CHECKED | /S/ Brent Meacham | 7/21/15 |
| DRAWN | | |
| DRAWN | /S/ Mark Shamian | 7/21/15 |
| DESIGNED | /S/ Mark Shamian | 7/21/15 |

**PUGET SOUND NAVAL SHIPYARD**

**CODE 2370 -- ENGINEERING DIVISION**

**Unless otherwise specified, dimensions are in inches.**

Decimals:
X.X = ±0.13
X.XX = ±0.025
X.XXX = ±0.003
X.XXXX = ±0.0005
Fractions = ±1/16 < 36"
Fractions = ±1/8 > 36"
Angles = ±0.5°

Drawing dimensional and geometric tolerances per ASME Y14.5M-1994

NO DEVIATIONS SHALL BE MADE WITHOUT CODE 2370 APPROVAL

| DRAWING NO. | FSR | RF# |
|---|---|---|
| 2301-3853 | N/A | N/A |

TITLE **PVOD BASE RING QUADRANTS**

| SCALE | | REV |
|---|---|---|
| AS SHOWN | Sheet 1 of 19 | Orig |

DWG. NO. 2301-3853 TITLE PVOD BASE RING QUADRANTS REV. Orig SHEET 1

\\psns.sy\unnpi-departments\C2300\Limited\Drawings\C2370\C2370Facilities\Solid Edge\2301-3853_D2W PVOD-Base Ring Quadrants\Drawing\2301-3853_Rev_Orig.dft

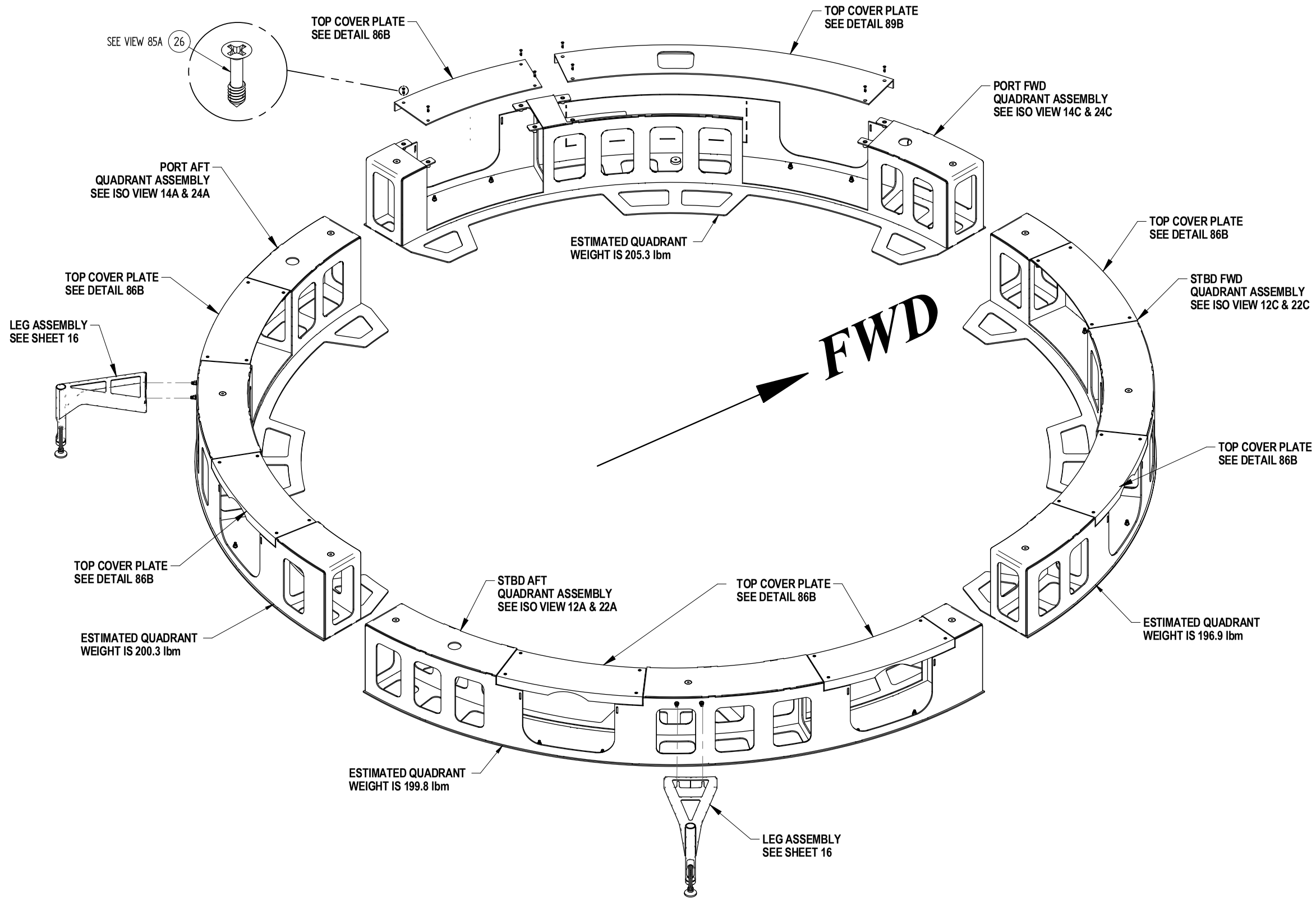


**ISOMETRIC VIEW 8A**
PVOD BASE RING QUADRANTS
FULLY ASSEMBLED

**PUGET SOUND NAVAL SHIPYARD**
**CODE 2370 -- ENGINEERING DIVISION**

Unless otherwise specified, dimensions are in inches.
Decimals:
X.X = ±0.13
X.XX = ±0.025
X.XXX = ±0.003
X.XXXX = ±0.0005
Fractions = ±1/16 < 36"
Fractions = ±1/8 > 36"
Angles = ±0.5°
Drawing dimensional and geometric tolerances per ASME Y14.5M-1994

NO DEVIATIONS SHALL BE MADE WITHOUT CODE 2370 APPROVAL

| DRAWING NO. | FSR | RF # |
|---|---|---|
| 2301-3853 | N/A | N/A |

TITLE
**PVOD BASE RING QUADRANTS**

| SCALE | | REV |
|---|---|---|
| AS SHOWN | Sheet 2 of 19 | Orig |

DWG. NO. 2301-3853 | TITLE PVOD BASE RING QUADRANTS | REV. Orig | SHEET 2

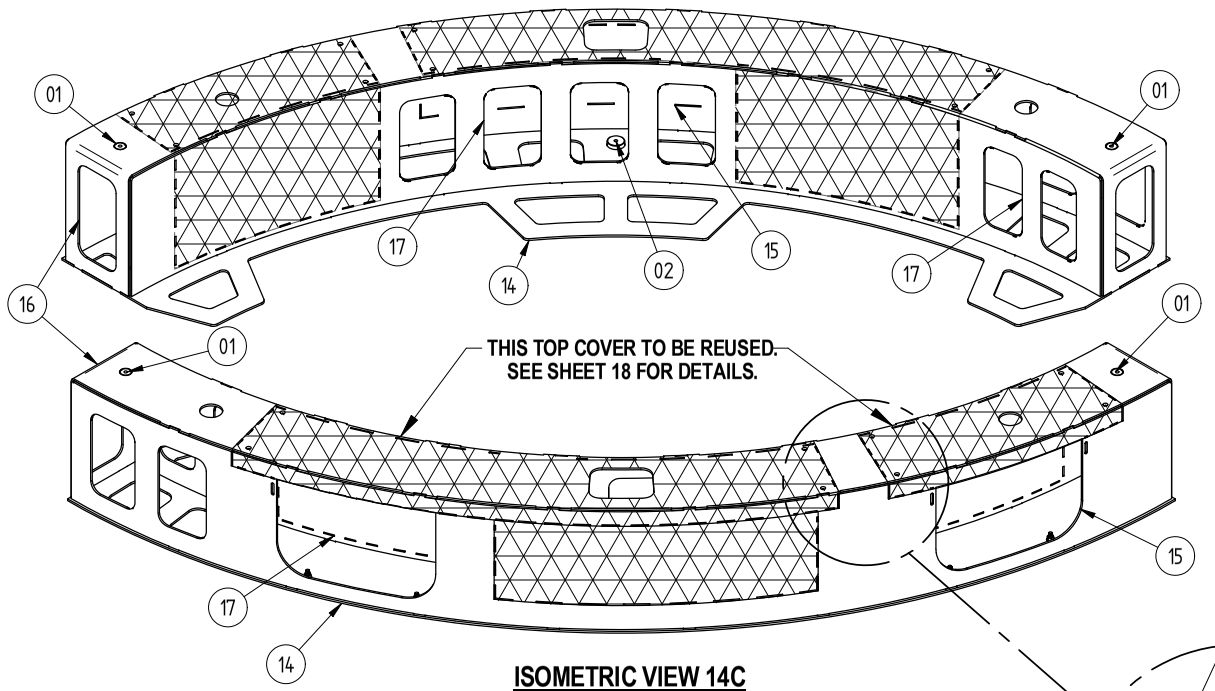


**ISOMETRIC VIEW 14C**
INNER AND OUTER VIEW OF
PORT FWD QUADRANT WELDMENT
PRIOR TO CUTOUTS

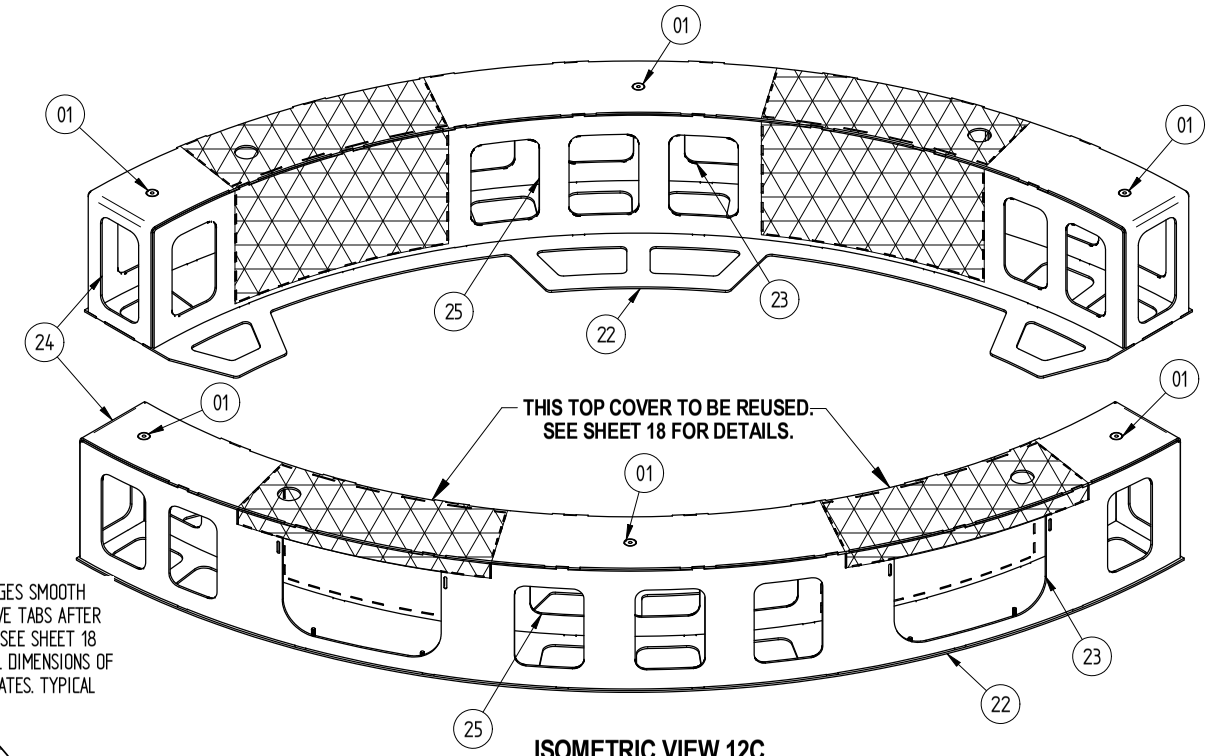


**ISOMETRIC VIEW 12C**
INNER AND OUTER VIEW OF
STBD FWD QUADRANT WELDMENT
PRIOR TO CUTOUTS

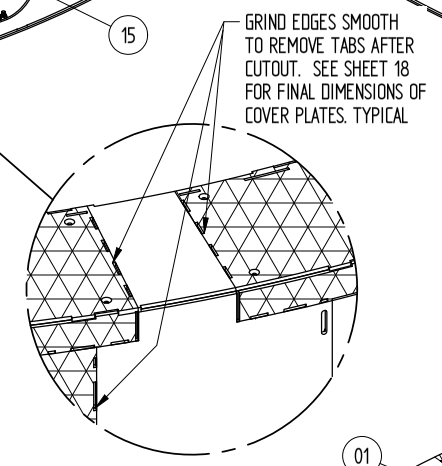


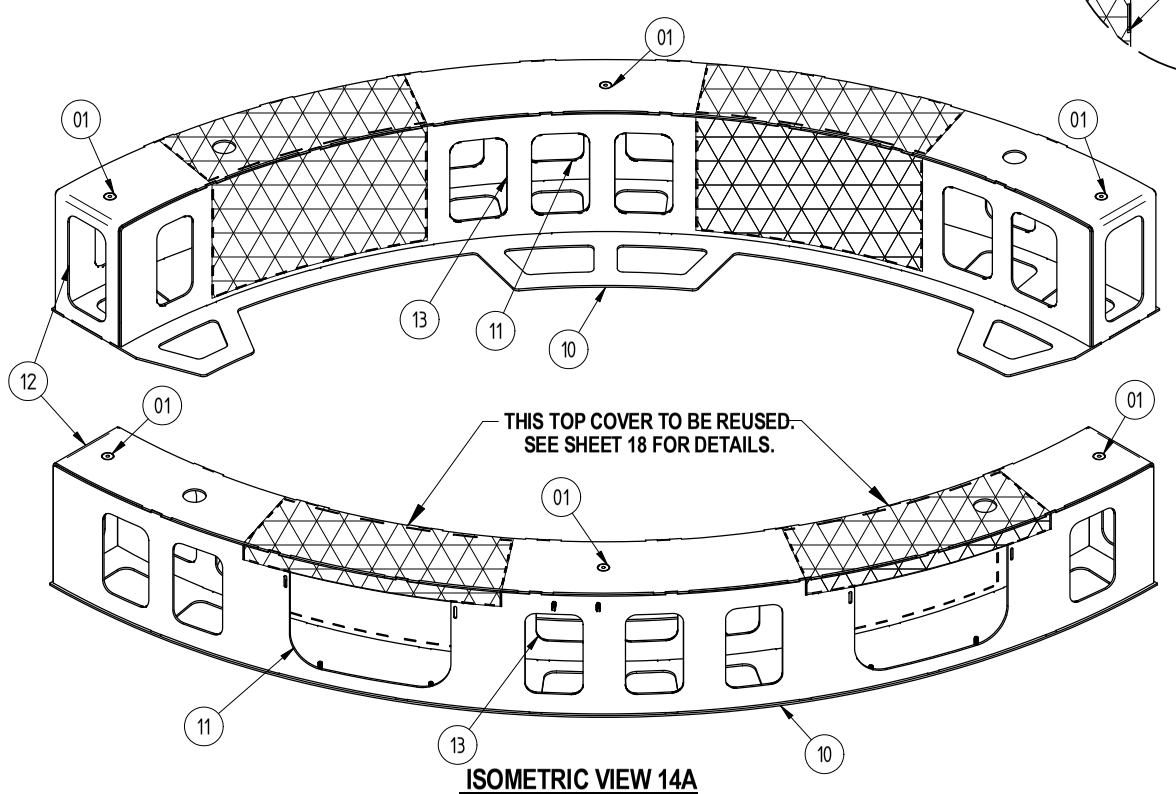


**ISOMETRIC VIEW 14A**
INNER AND OUTER VIEW OF
PORT AFT QUADRANT WELDMENT
PRIOR TO CUTOUTS

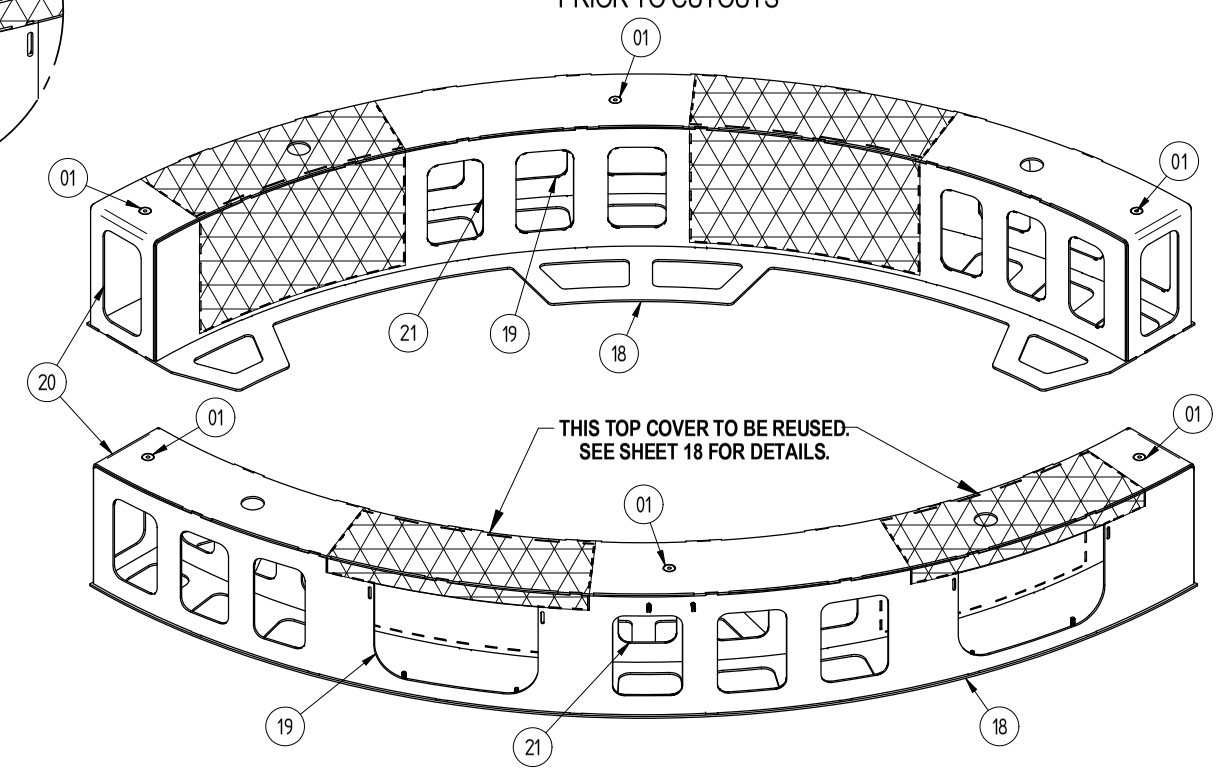


**ISOMETRIC VIEW 12A**
INNER AND OUTER VIEW OF
STBD AFT QUADRANT WELDMENT
PRIOR TO CUTOUTS

AREAS MARKED WITH THIS MESH PATTERN
ARE TO BE CUT OUT AFTER WELDMENT OF
EACH QUADRANT. SHEET 5 SHOWS QUADRANTS
WITH CUTOUTS AND ADDITIONAL WELD MENTS
TO BE ADDED.

**PUGET SOUND NAVAL SHIPYARD**
CODE 2370 -- ENGINEERING DIVISION

Unless otherwise specified, dimensions are in inches.
Decimals:
X.X = ±0.13
X.XX = ±0.025
X.XXX = ±0.003
X.XXXX = ±0.0005
Fractions = ±1/16 < 36"
Fractions = ±1/8 > 36"
Angles = ±0.5°
Drawing dimensional and geometric tolerances per ASME Y14.5M-1994

NO DEVIATIONS SHALL BE MADE
WITHOUT CODE 2370 APPROVAL

| DRAWING NO. | FSR | REF # |
|---|---|---|
| 2301-3853 | N/A | N/A |

TITLE
**PVOD BASE RING QUADRANTS**

| SCALE | | REV |
|---|---|---|
| AS SHOWN | Sheet 3 of 19 | Orig |

DWG. NO. 2301-3853 | TITLE PVOD BASE RING QUADRANTS | REV. Orig | SHEET 3

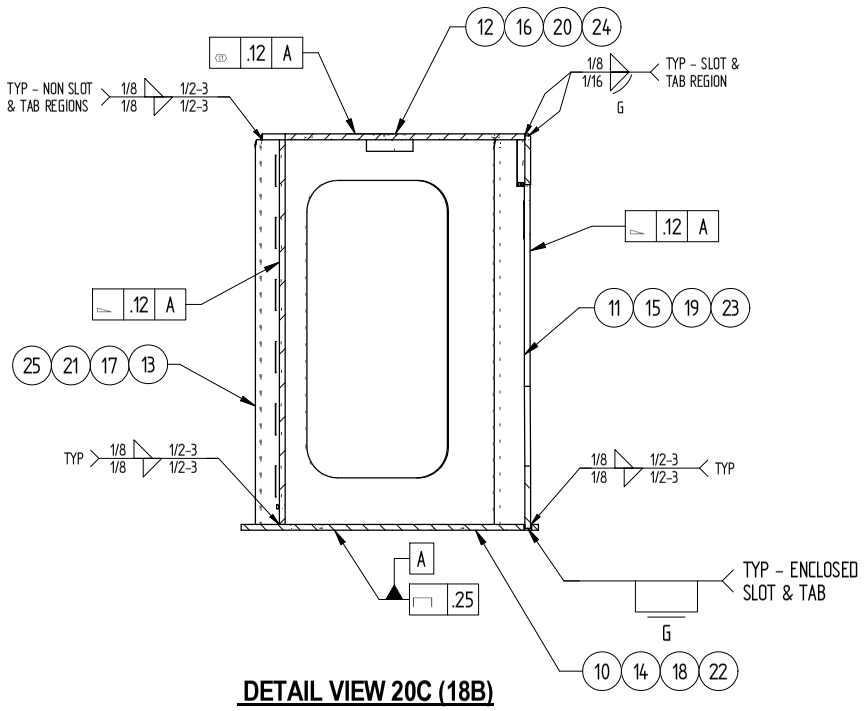


**DETAIL VIEW 20C (18B)**
QUADRANT WELDMENT
TYPICAL

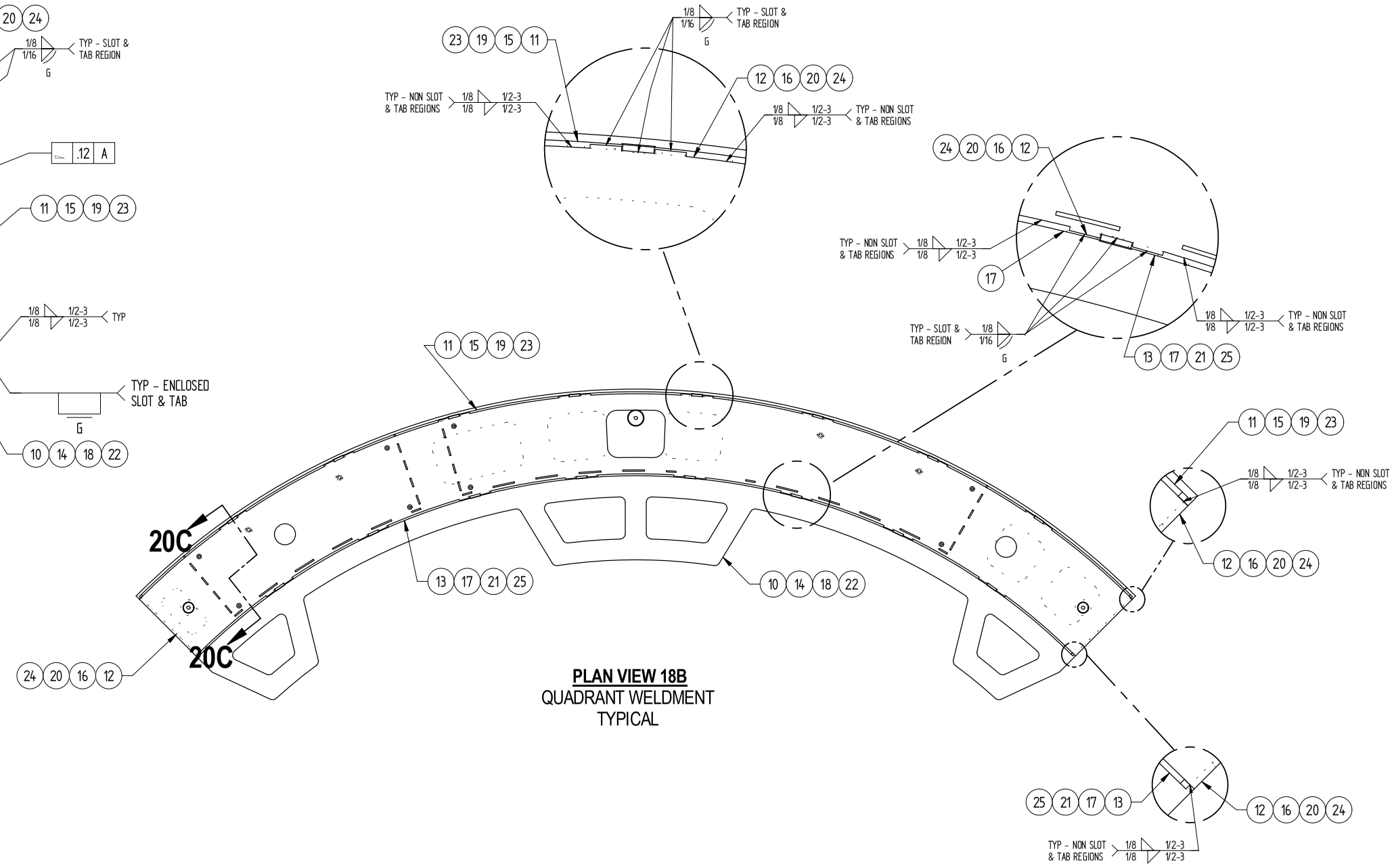


**PLAN VIEW 18B**
QUADRANT WELDMENT
TYPICAL

**PUGET SOUND NAVAL SHIPYARD**
**CODE 2370 -- ENGINEERING DIVISION**

**Unless otherwise specified, dimensions are in inches.**
Decimals:
X.X = ±0.13
X.XX = ±0.025
X.XXX = ±0.003
X.XXXX = ±0.0005
Fractions = ±1/16 < 36"
Fractions = ±1/8 > 36"
Angles = ±0.5°
Drawing dimensional and geometric tolerances per ASME Y14.5M-1994

NO DEVIATIONS SHALL BE MADE WITHOUT CODE 2370 APPROVAL

| DRAWING NO. | FSR | RF # |
|---|---|---|
| 2301-3853 | N/A | N/A |

TITLE
**PVOD BASE RING QUADRANTS**

| SCALE | | REV |
|---|---|---|
| AS SHOWN | Sheet 4 of 19 | Orig |

TITLE: PVOD BASE RING QUADRANTS
REV: Orig
SHEET: 4
DWG. NO.: 2301-3853

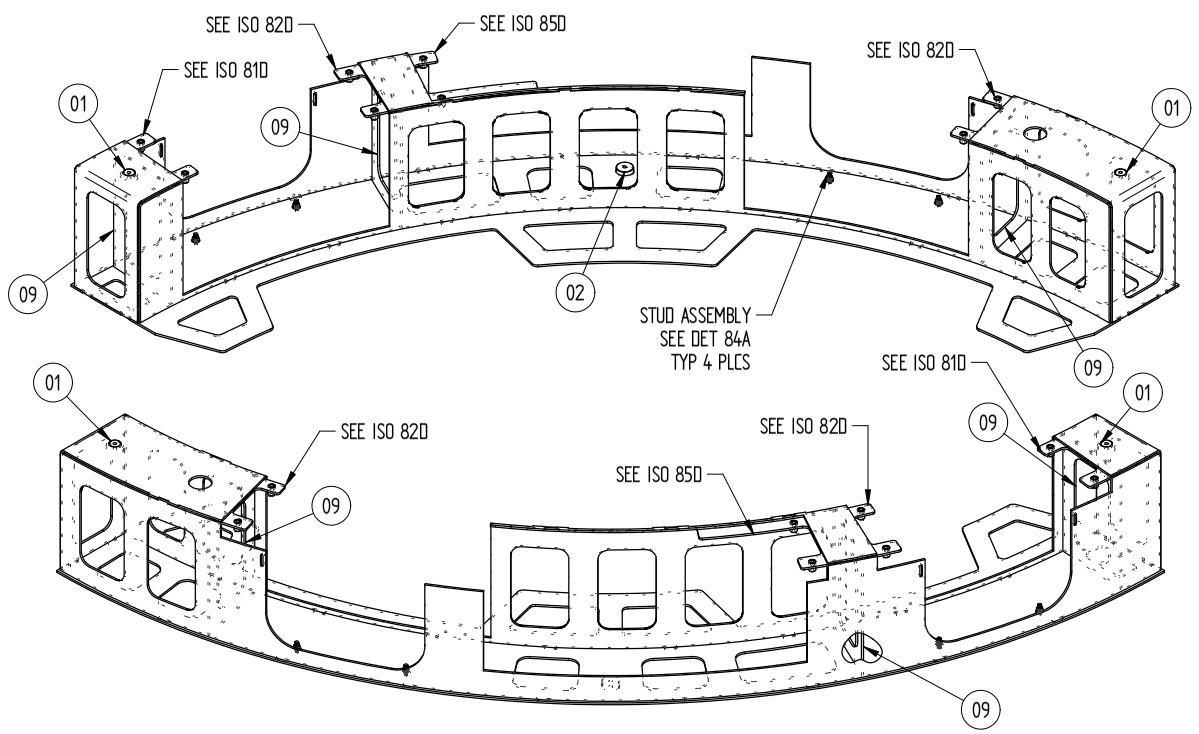


**ISOMETRIC VIEW 24C**
PORT FWD QUADRANT
CUTOUTS AND ADDITIONAL WELDMENTS
SEE ISO 14C FOR INITIAL WELDMENT

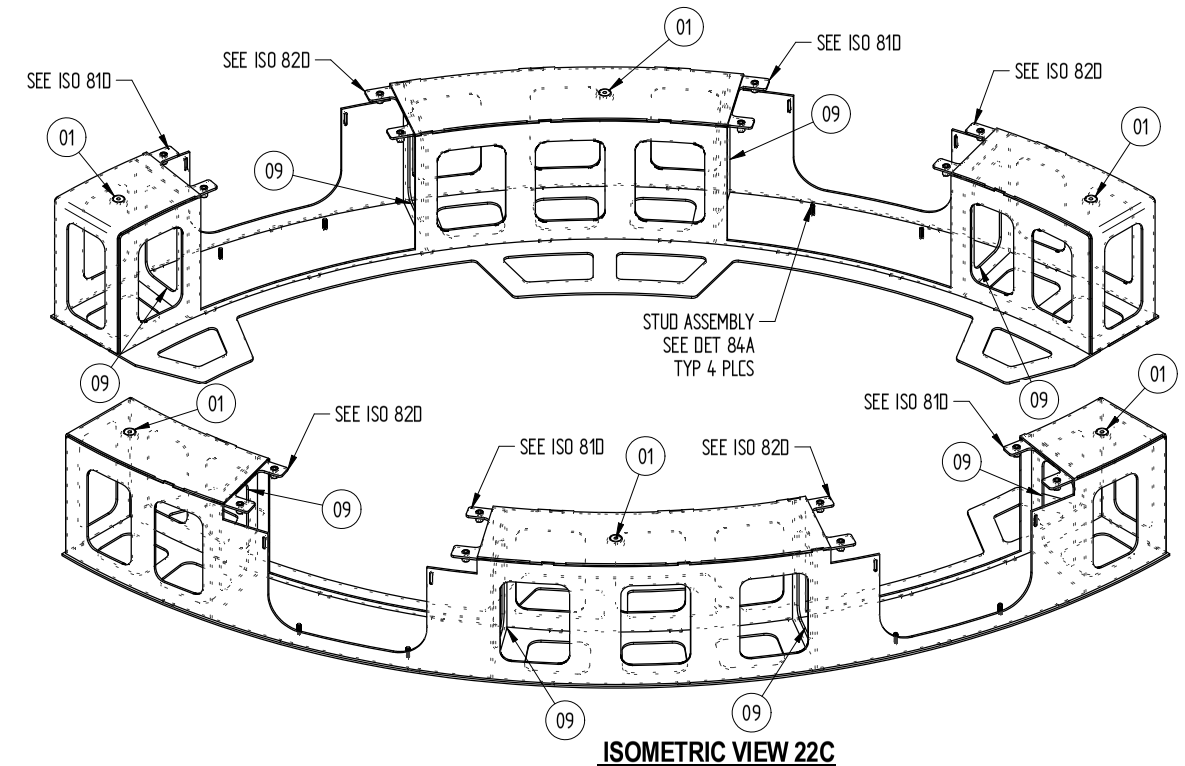


**ISOMETRIC VIEW 22C**
STBD FWD QUADRANT
CUTOUTS AND ADDITIONAL WELDMENTS
SEE ISO VIEW 12C FOR INITIAL WELDMENT

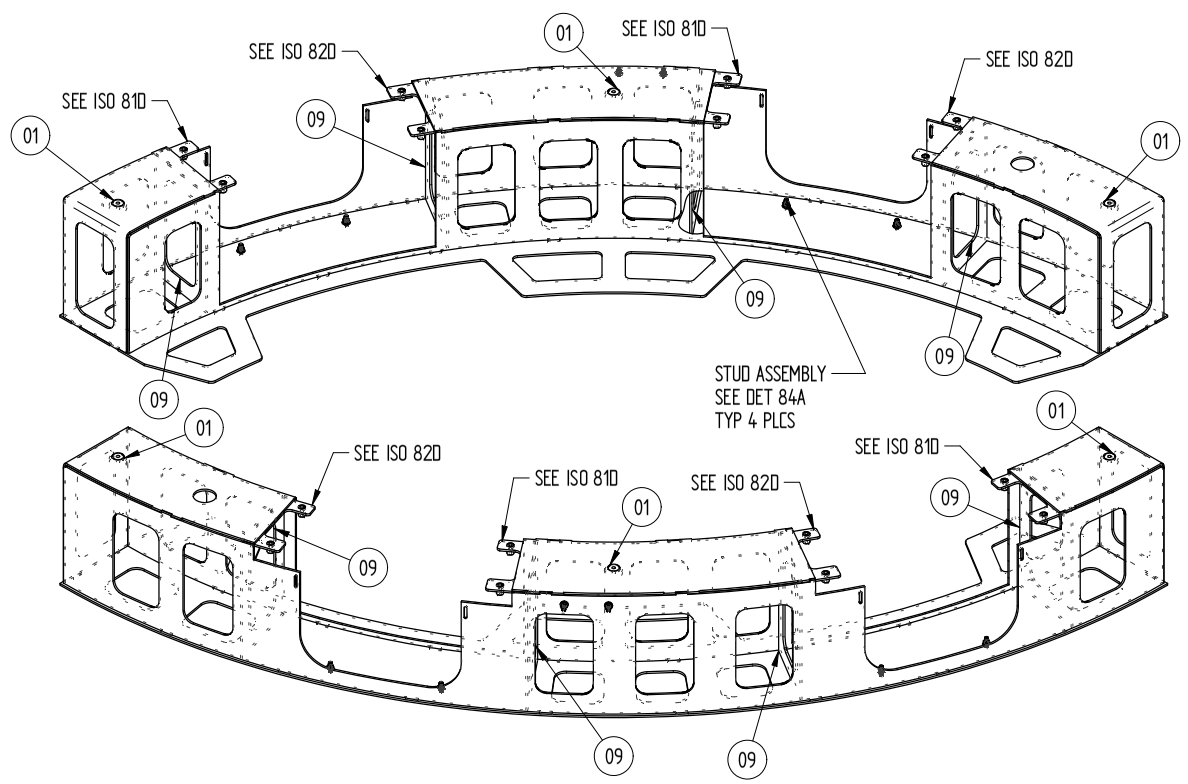


**ISOMETRIC VIEW 24A**
PORT AFT QUADRANT
CUTOUTS AND ADDITIONAL WELDMENTS
SEE ISO VIEW 14A FOR INITIAL WELDMENT

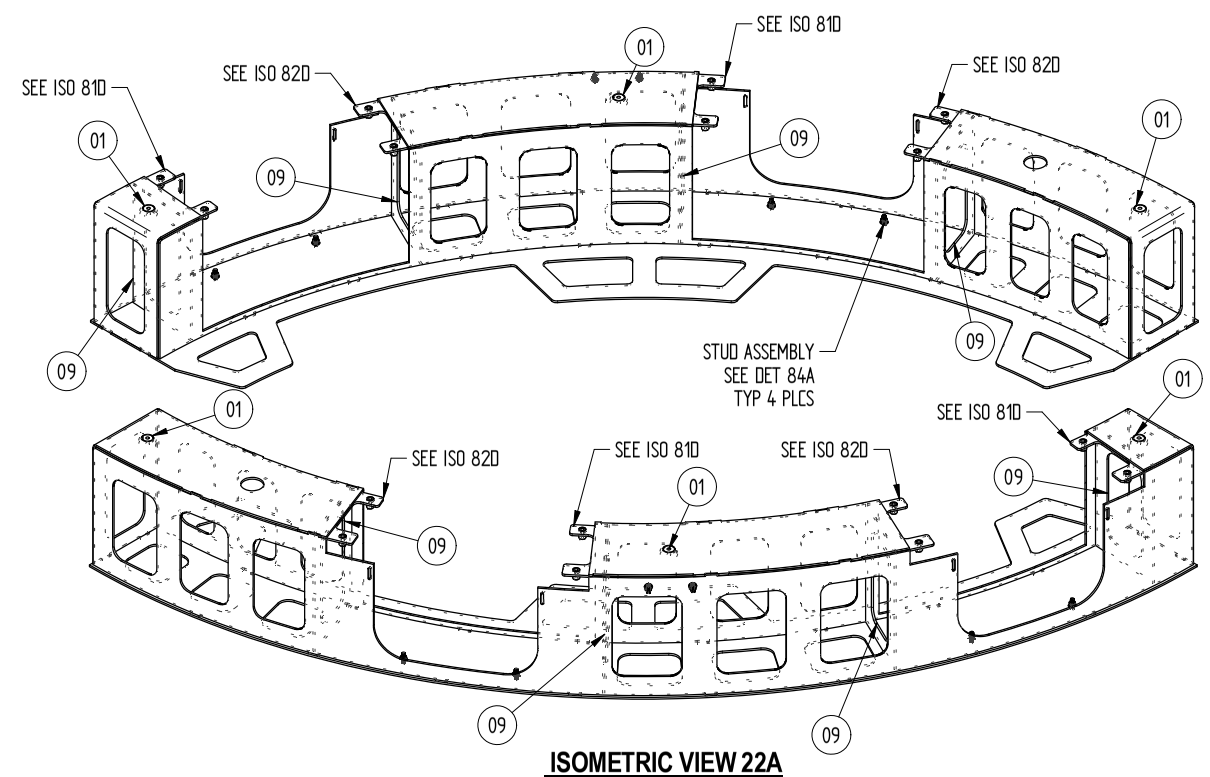


**ISOMETRIC VIEW 22A**
STBD AFT QUADRANT
CUTOUTS AND ADDITIONAL WELDMENTS
SEE ISOVIEW 12A FOR INITIAL WELDMENT

**PUGET SOUND NAVAL SHIPYARD**
**CODE 2370 -- ENGINEERING DIVISION**

**Unless otherwise specified, dimensions are in inches.**
Decimals:
X.X = ±0.13
X.XX = ±0.025
X.XXX = ±0.003
X.XXXX = ±0.0005
Fractions = ±1/16 < 36"
Fractions = ±1/8 > 36"
Angles = ±0.5°
Drawing dimensional and geometric tolerances per ASME Y14.5M-1994

NO DEVIATIONS SHALL BE MADE WITHOUT CODE 2370 APPROVAL

| DRAWING NO. | FSR | R/F # |
|---|---|---|
| 2301-3853 | N/A | N/A |

TITLE
**PVOD BASE RING QUADRANTS**

| SCALE | | REV |
|---|---|---|
| AS SHOWN | Sheet 5 of 19 | Orig |

DWG. NO. 2301-3853 | TITLE PVOD BASE RING QUADRANTS | REV. Orig | SHEET 5

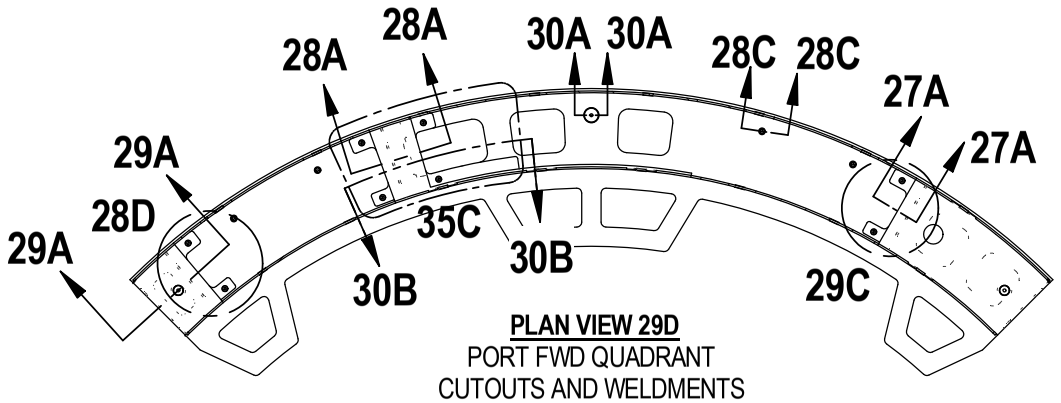


**PLAN VIEW 29D**
PORT FWD QUADRANT
CUTOUTS AND WELDMENTS

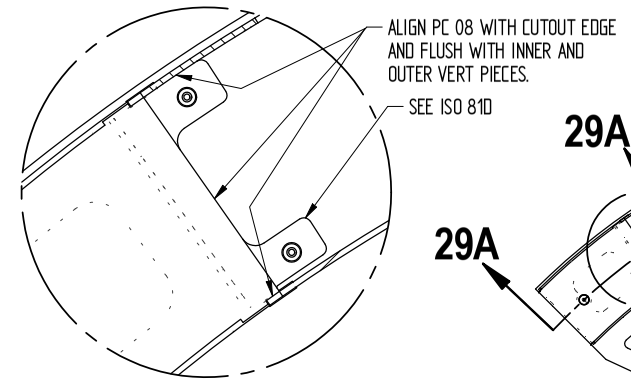


**DETAIL VIEW 28D (26D, 26C, 26B, 29D)**
TOP COVER SUPPORT PLATE LOCATION
LEFT ASSEMBLY -- TYPICAL

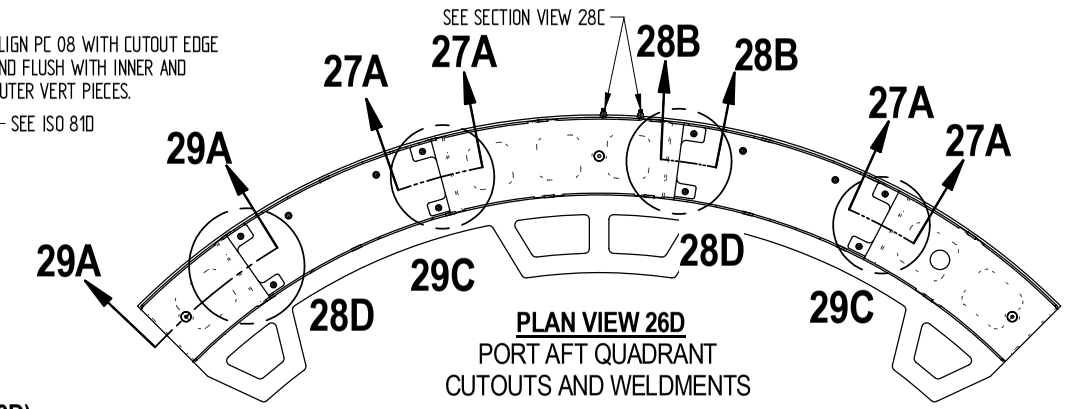


**PLAN VIEW 26D**
PORT AFT QUADRANT
CUTOUTS AND WELDMENTS

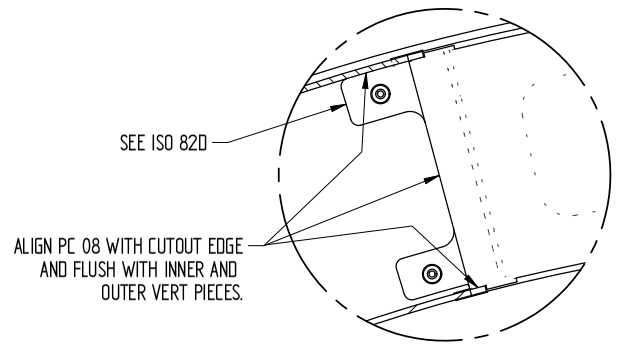


**DETAIL VIEW 29C (26D, 26C, 26B, 29D)**
TOP COVER SUPPORT PLATE LOCATION
RIGHT ASSEMBLY -- TYPICAL

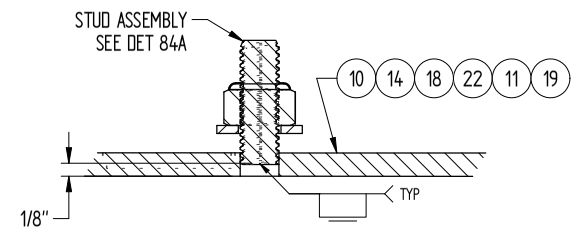


**SECTION VIEW 28C (29D)**
STUD ASSEMBLY WELDMENT
TYPICAL

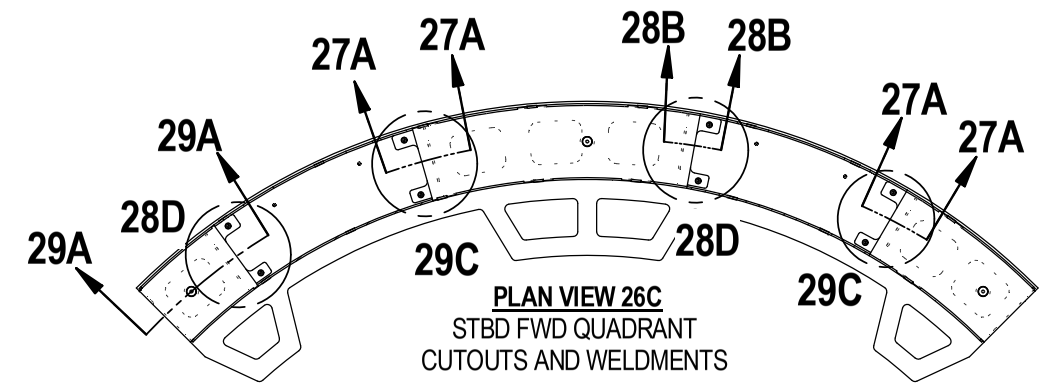


**PLAN VIEW 26C**
STBD FWD QUADRANT
CUTOUTS AND WELDMENTS

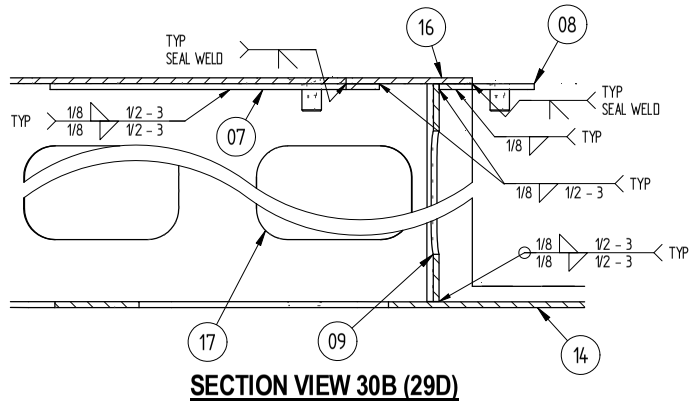


**SECTION VIEW 30B (29D)**
PORT FWD QUADRANT WELDMENT

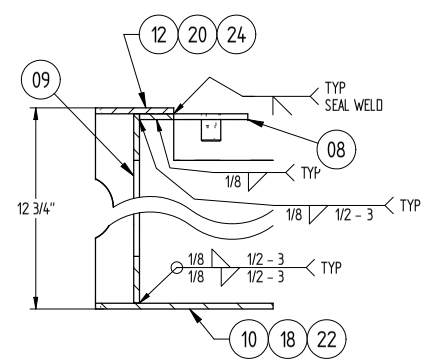


**SECTION VIEW 28B (26B, 26C, 26D )**
QUADRANT WELDMENT
TYPICAL

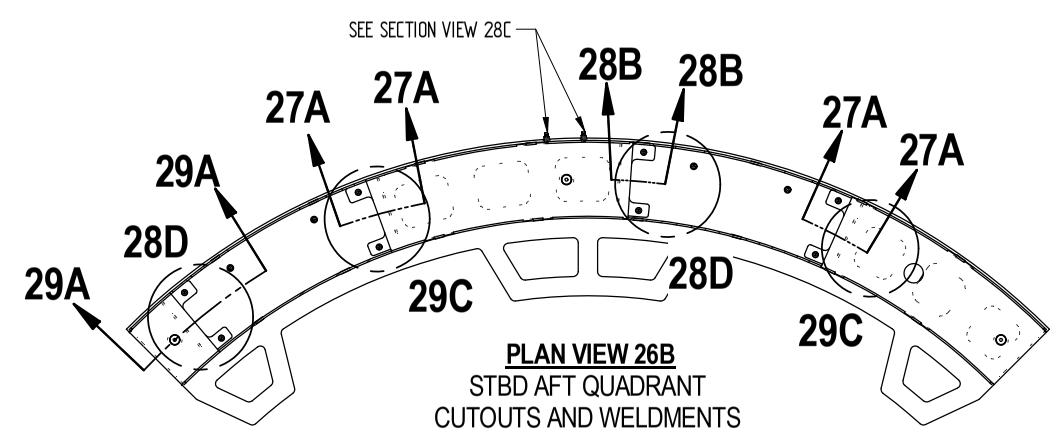


**PLAN VIEW 26B**
STBD AFT QUADRANT
CUTOUTS AND WELDMENTS

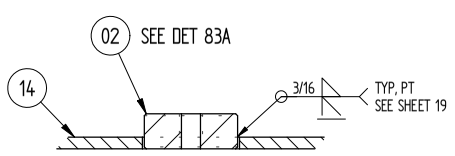


**SECTION VIEW 30A (29D)**
HOIST RING BLOCK-PC 02
WELDMENT

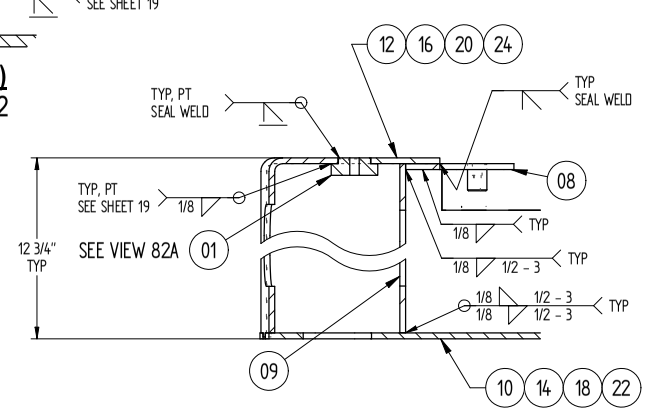


**SECTION VIEW 29A (26B, 26C, 26D, 29D)**
QUADRANT WELDMENT
TYPICAL

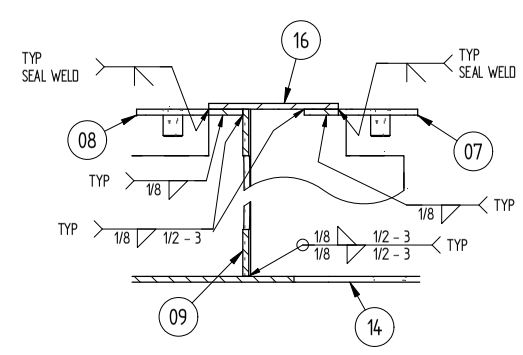


**SECTION VIEW 28A (29D )**
PORT FWD QUADRANT WELDMENT

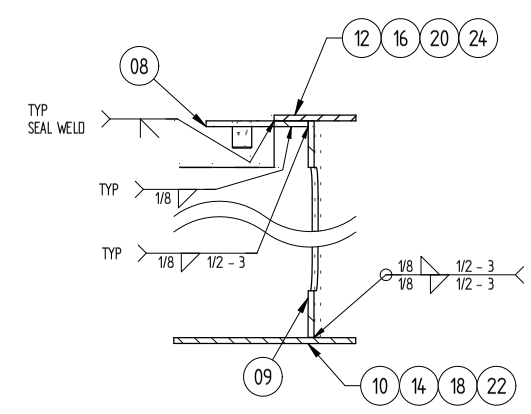


**SECTION VIEW 27A (26B, 26C, 26D, 29D )**
QUADRANT WELDMENT
TYPICAL

**PUGET SOUND NAVAL SHIPYARD**
**CODE 2370 -- ENGINEERING DIVISION**

**Unless otherwise specified, dimensions are in inches.**
Decimals:
X.X = ±0.13
X.XX = ±0.025
X.XXX = ±0.003
X.XXXX = ±0.0005
Fractions = ±1/16 < 36"
Fractions = ±1/8 > 36"
Angles = ±0.5°
Drawing dimensional and geometric tolerances per ASME Y14.5M-1994

NO DEVIATIONS SHALL BE MADE
WITHOUT CODE 2370 APPROVAL

| DRAWING NO. | FSR | RF# |
|---|---|---|
| 2301-3853 | N/A | N/A |

TITLE
**PVOD BASE RING QUADRANTS**

| SCALE | | REV |
|---|---|---|
| AS SHOWN | Sheet 6 of 19 | Orig |

TITLE: PVOD BASE RING QUADRANTS
REV: Orig
SHEET: 6
DWG NO: 2301-3853

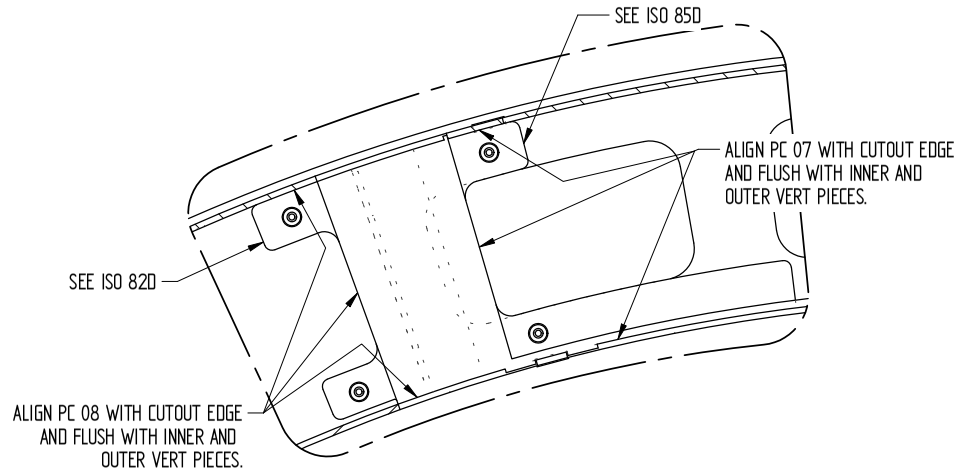


**DETAIL VIEW 35C (29D)**
TOP COVER SUPPORT PLATE LOCATION
LONG ASSEMBLY

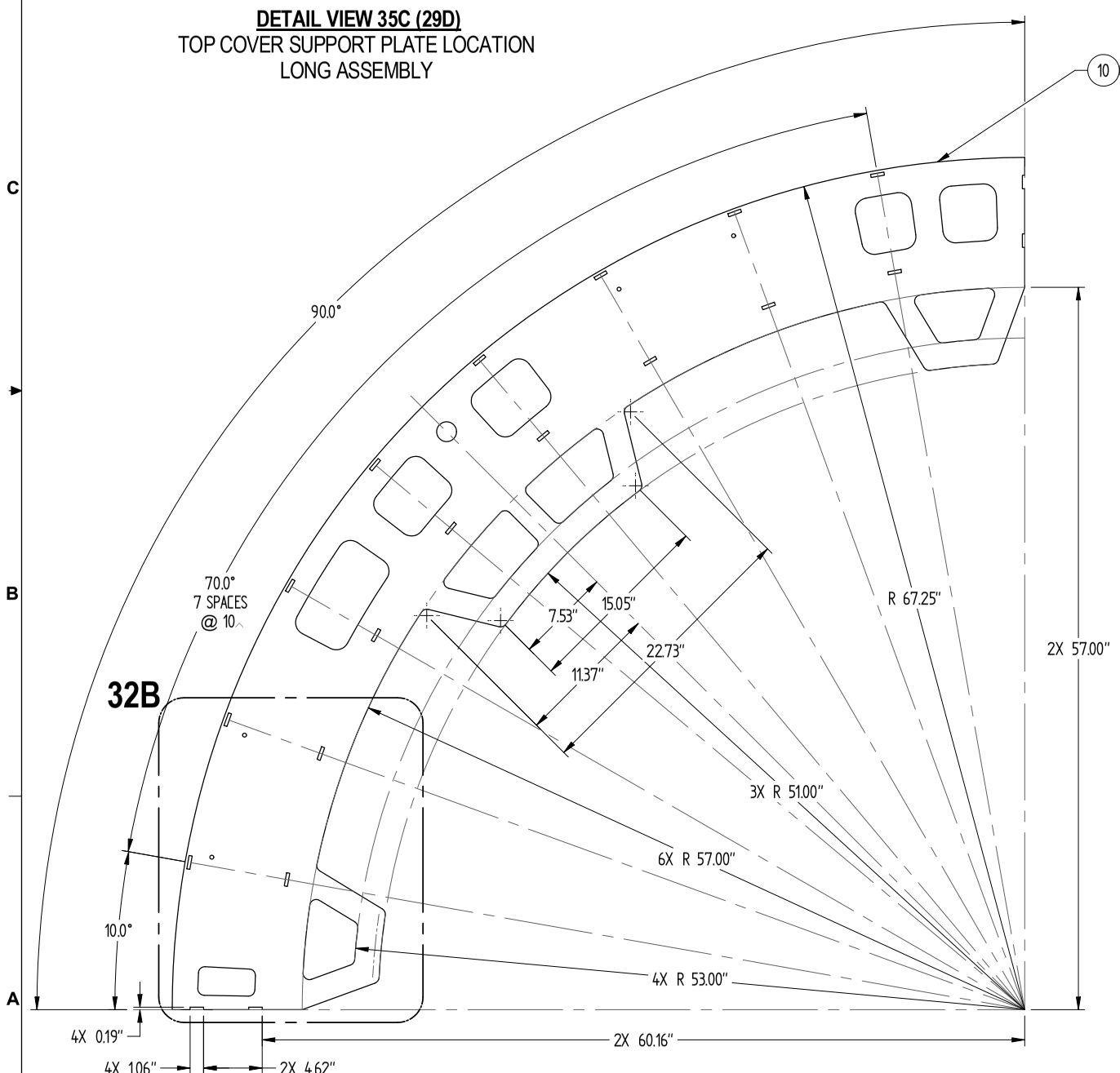


**PLAN VIEW 34A (37A, 37C, 39B, 39C)**
BASE PLATE DIMENSIONS
TYPICAL

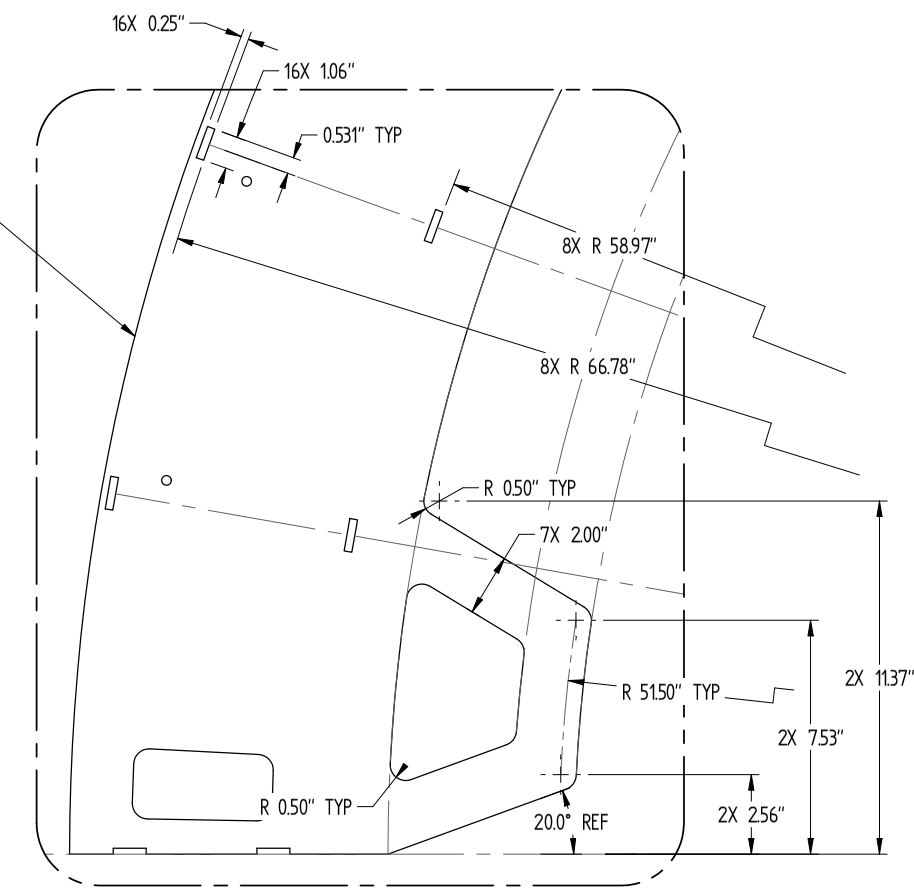


**DETAIL VIEW 32B (34A)**
TYPICAL 2 PLCS

**PUGET SOUND NAVAL SHIPYARD**
**CODE 2370 -- ENGINEERING DIVISION**

Unless otherwise specified, dimensions are in inches.
Decimals:
X.X = ±0.13
X.XX = ±0.025
X.XXX = ±0.003
X.XXXX = ±0.0005
Fractions = ±1/16 < 36"
Fractions = ±1/8 > 36"
Angles = ±0.5°
Drawing dimensional and geometric tolerances per ASME Y14.5M-1994

NO DEVIATIONS SHALL BE MADE WITHOUT CODE 2370 APPROVAL

| DRAWING NO. | FSR | RF # |
|---|---|---|
| 2301-3853 | N/A | N/A |

TITLE
**PVOD BASE RING QUADRANTS**

| SCALE | | REV |
|---|---|---|
| AS SHOWN | Sheet 7 of 19 | Orig |

TITLE: PVOD BASE RING QUADRANTS
REV: Orig
SHEET: 7
DWG. NO: 2301-3853

**SEE SHEET 7 FOR ADDITIONAL DIMENSIONS NOT SHOWN**

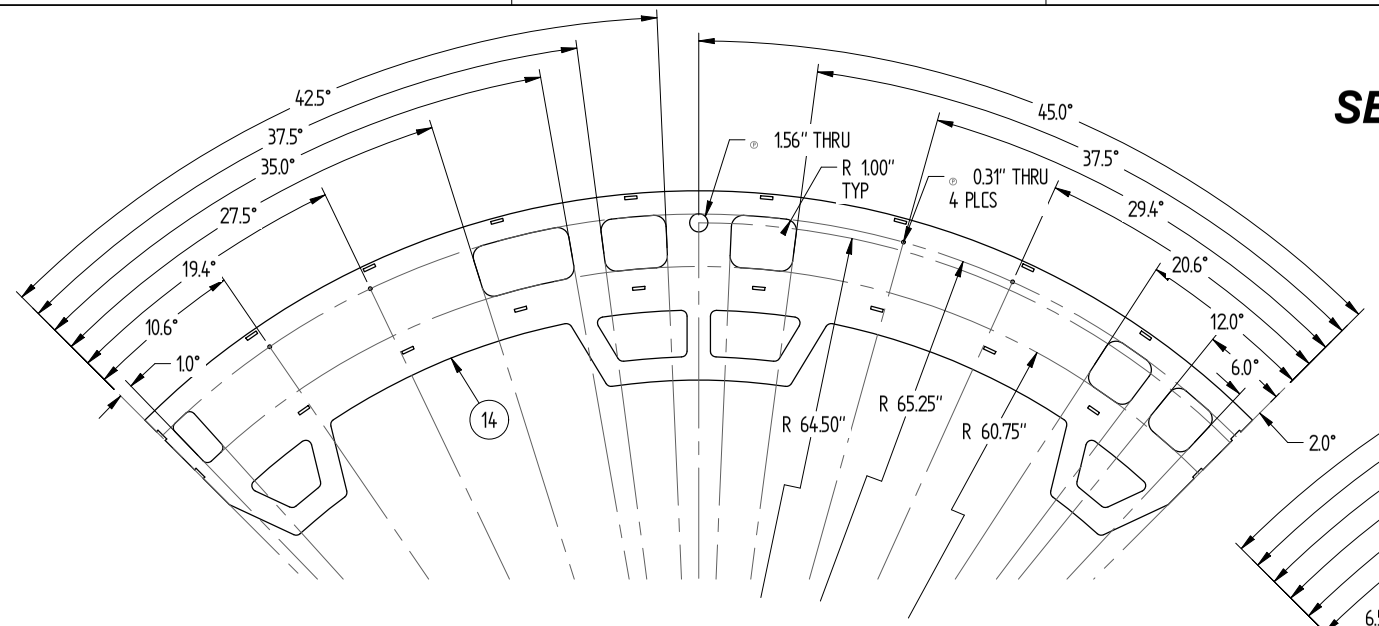


**PLAN VIEW 39C**
PORT FWD BASE PLATE -- PC 14

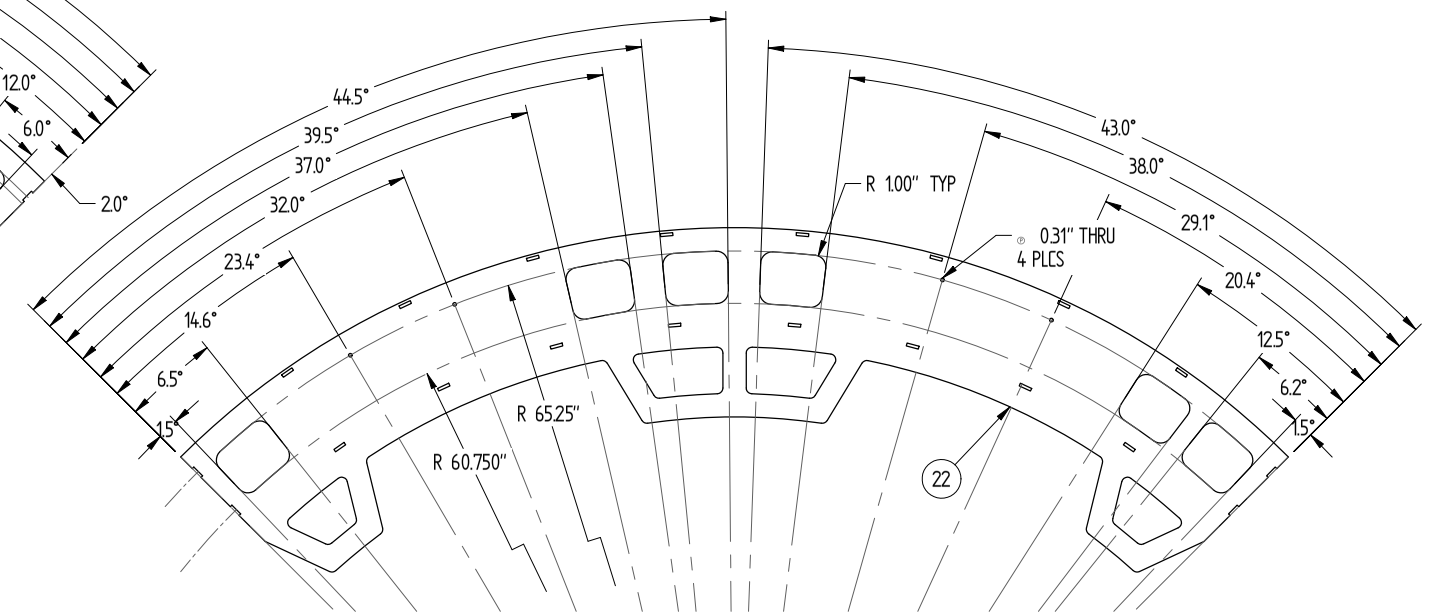


**PLAN VIEW 37C**
STBD FWD BASE PLATE -- PC 22

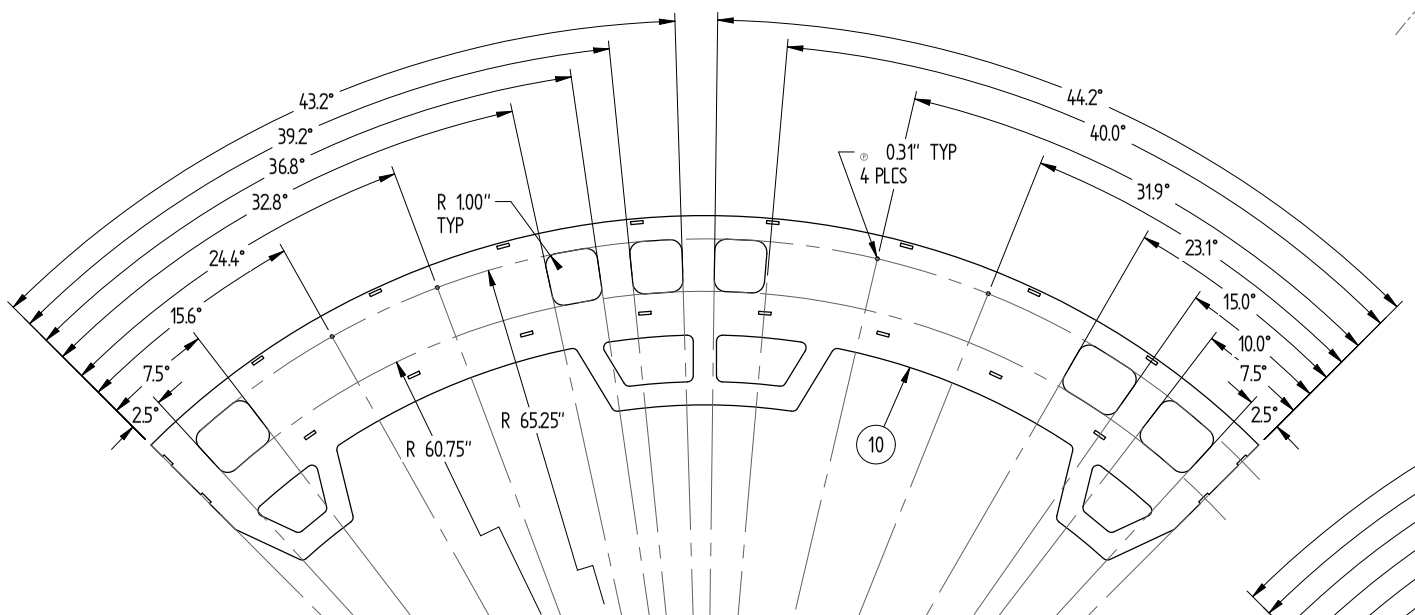


**PLAN VIEW 39B**
PORT AFT BASE PLATE -- PC 10

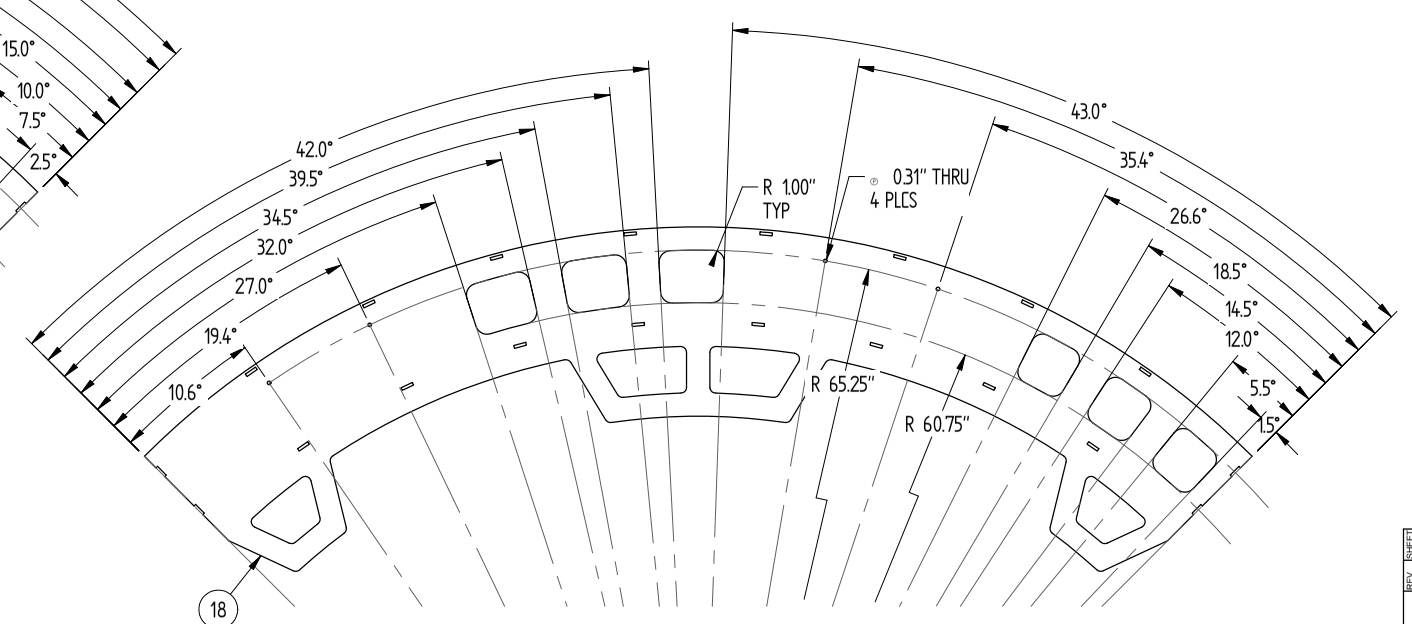


**PLAN VIEW 37A**
STBD AFT BASE PLATE -- PC 18

**PUGET SOUND NAVAL SHIPYARD**
**CODE 2370 -- ENGINEERING DIVISION**

**Unless otherwise specified, dimensions are in inches.**

Decimals:
X.X = ±0.13
X.XX = ±0.025
X.XXX = ±0.003
X.XXXX = ±0.0005
Fractions = ±1/16 < 36"
Fractions = ±1/8 > 36"
Angles = ±0.5°
Drawing dimensional and geometric tolerances per ASME Y14.5M-1994

NO DEVIATIONS SHALL BE MADE WITHOUT CODE 2370 APPROVAL

| DRAWING NO. | FSR | RF # |
|---|---|---|
| 2301-3853 | N/A | N/A |

TITLE
**PVOD BASE RING QUADRANTS**

| SCALE | | REV |
|---|---|---|
| AS SHOWN | Sheet 8 of 19 | Orig |

TITLE: PVOD BASE RING QUADRANTS
REV: Orig
SHEET: 8
DWG. NO.: 2301-3853

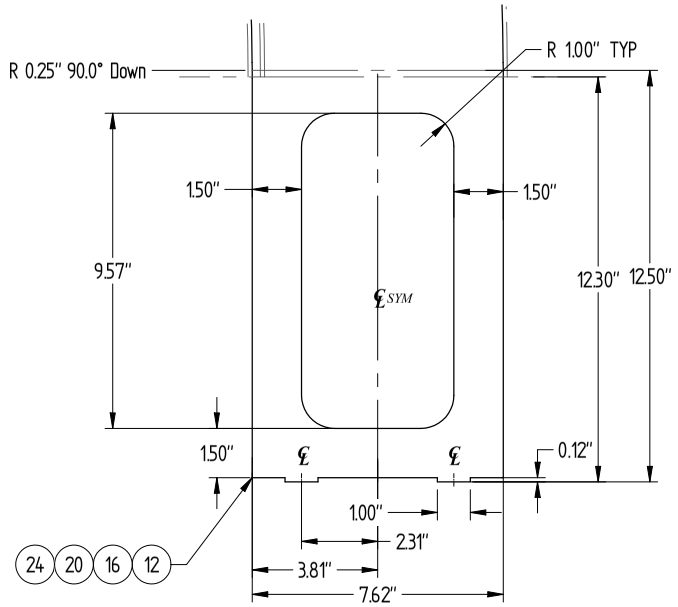


**DETAIL VIEW 45C (42B)**
TYPICAL 2 PLCS

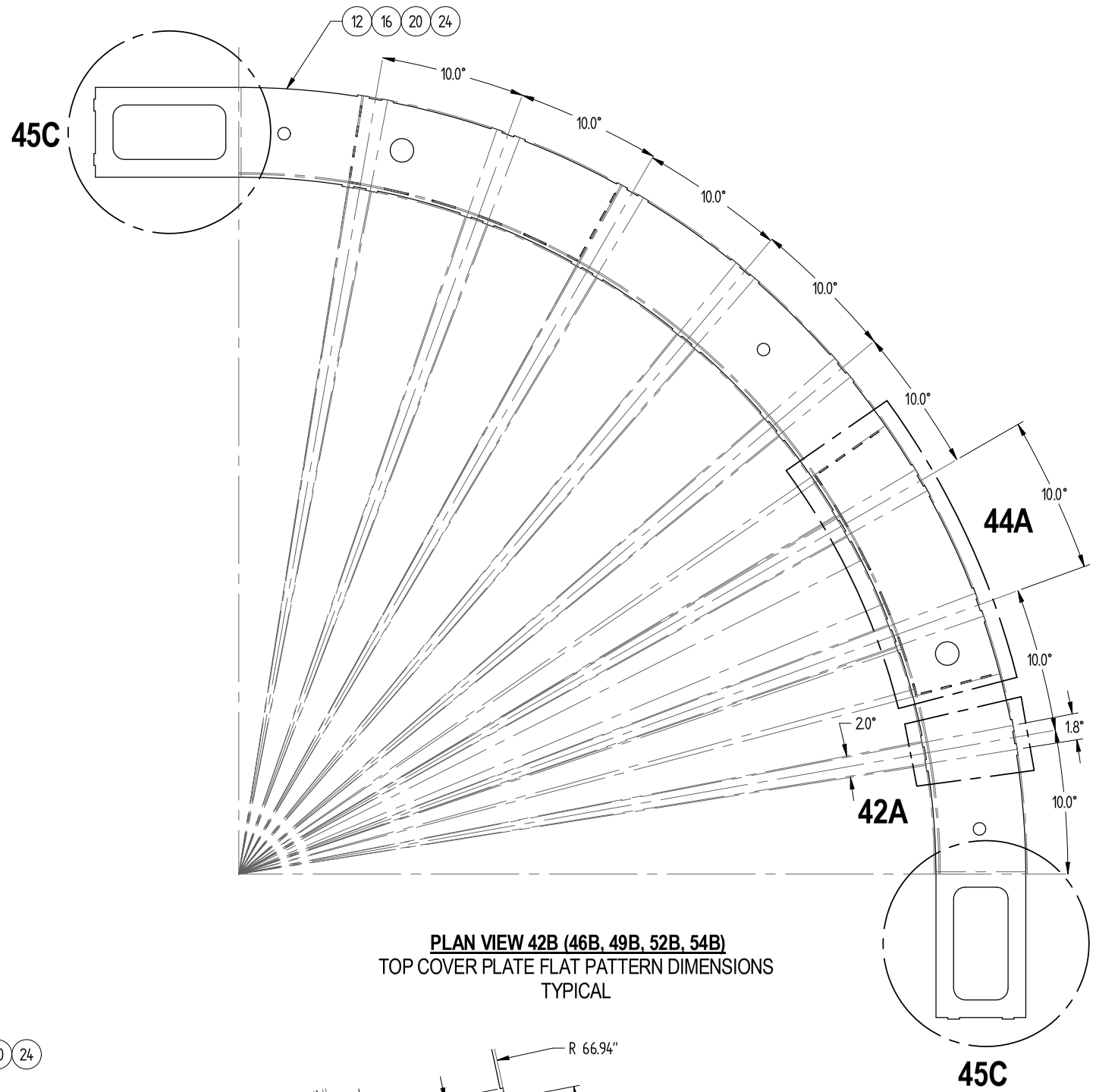


**PLAN VIEW 42B (46B, 49B, 52B, 54B)**
TOP COVER PLATE FLAT PATTERN DIMENSIONS
TYPICAL

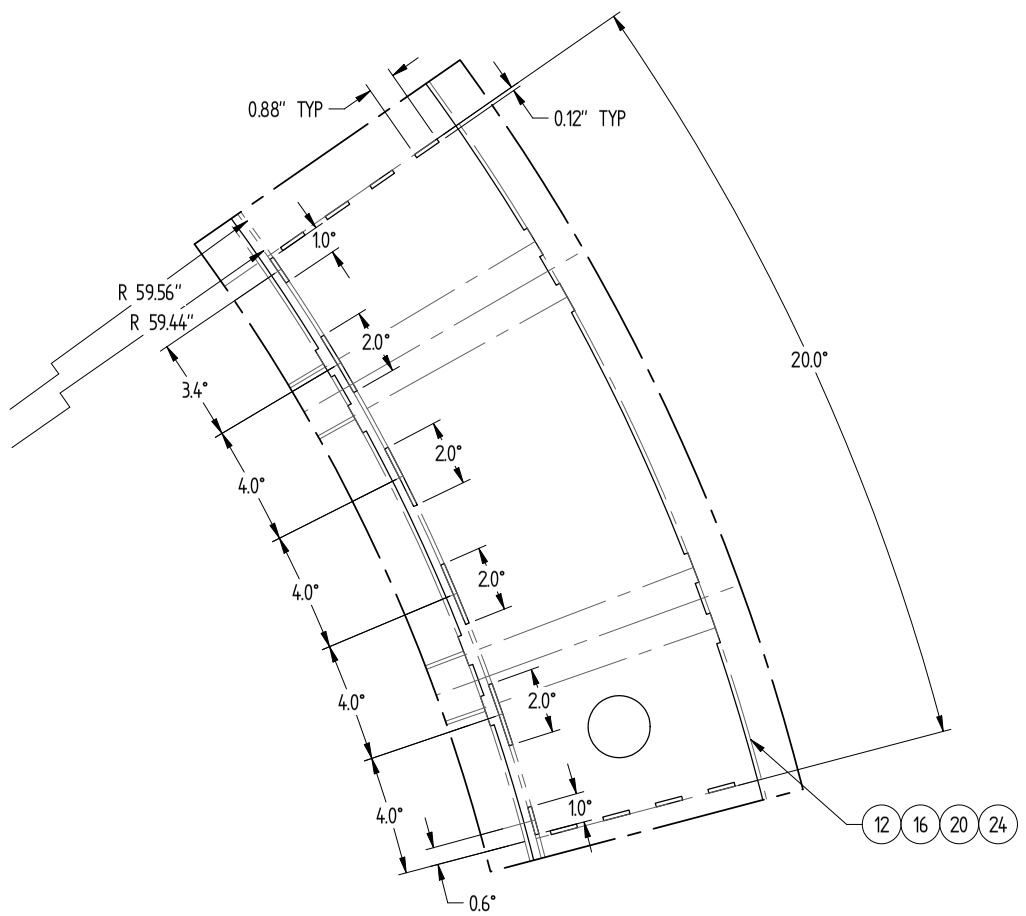


**DETAIL VIEW 44A (42B)**
CUTOUT DIMENSIONS
TYPICAL 7 PLCS

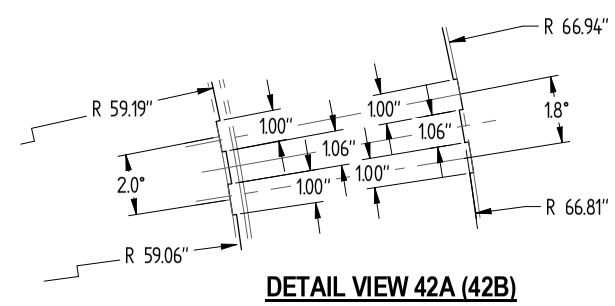


**DETAIL VIEW 42A (42B)**
TAB DIMENSIONS
TYPICAL

**PUGET SOUND NAVAL SHIPYARD**
**CODE 2370 -- ENGINEERING DIVISION**

Unless otherwise specified, dimensions are in inches.
Decimals:
X.X = ±0.13
X.XX = ±0.025
X.XXX = ±0.003
X.XXXX = ±0.0005
Fractions = ±1/16 < 36"
Fractions = ±1/8 > 36"
Angles = ±0.5°
Drawing dimensional and geometric tolerances per: ASME Y14.5M-1994

NO DEVIATIONS SHALL BE MADE WITHOUT CODE 2370 APPROVAL

| DRAWING NO. | FSR | RF # |
|---|---|---|
| 2301-3853 | N/A | N/A |

TITLE
**PVOD BASE RING QUADRANTS**

| SCALE | | REV |
|---|---|---|
| AS SHOWN | Sheet 9 of 19 | Orig |

TITLE: PVOD BASE RING QUADRANTS
REV: Orig
SHEET: 9
DWG. NO: 2301-3853

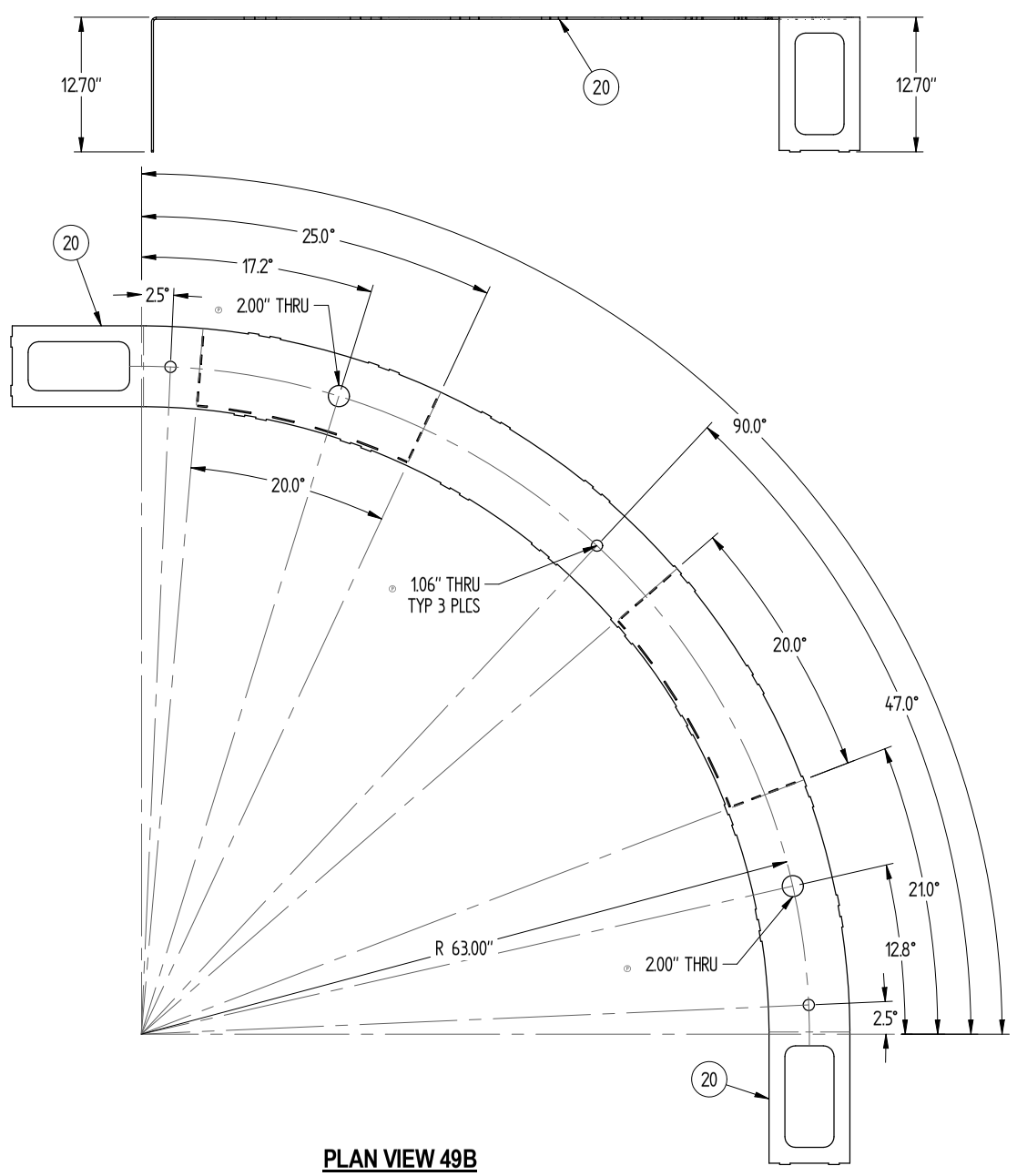


**PLAN VIEW 49B**
STBD AFT TOP COVER PLATE -- PC 20
FLAT PATTERN & BENDS

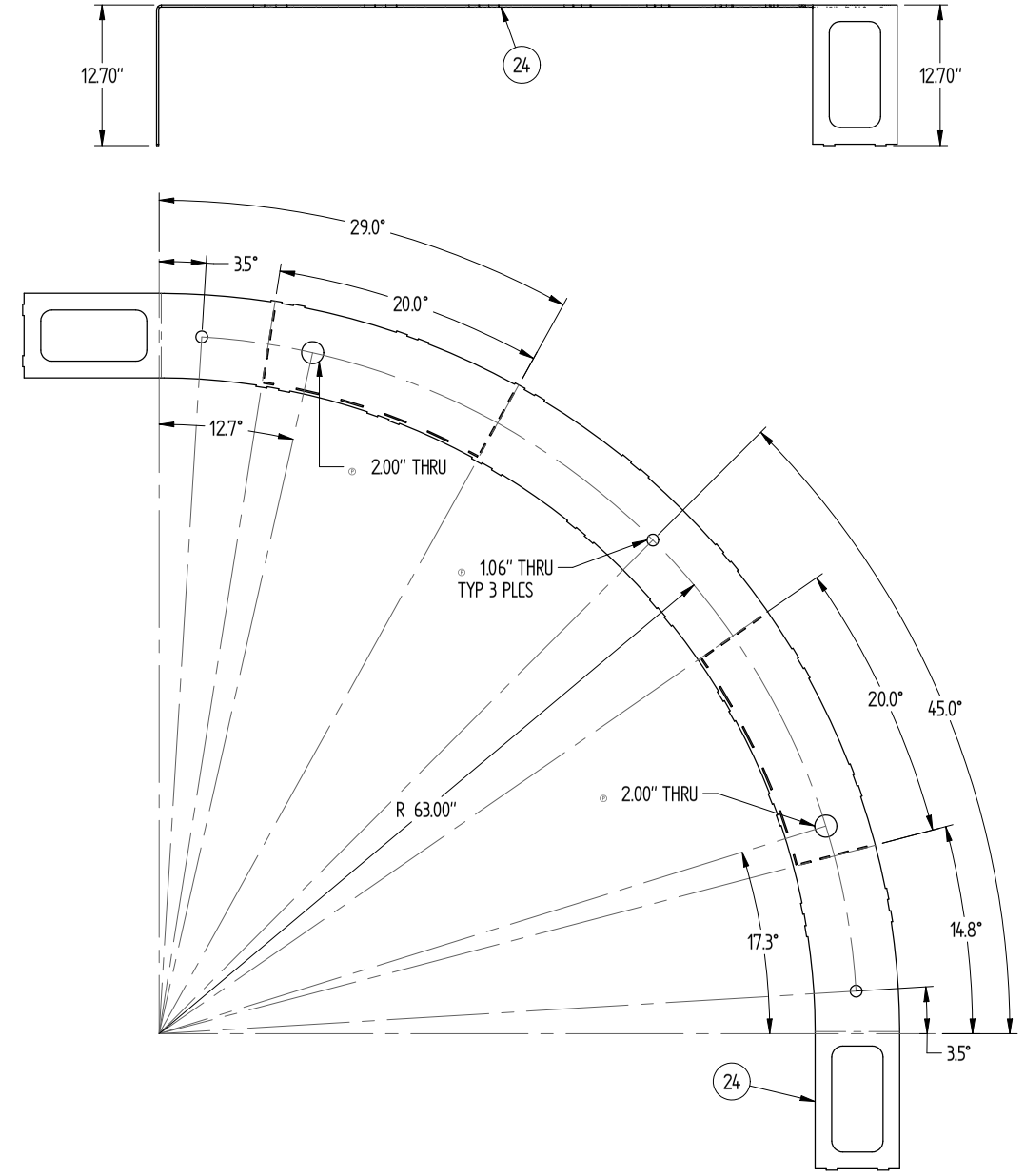


**PLAN VIEW 46B**
STBD FWD TOP COVER PLATE -- PC 24
FLAT PATTERN & BENDS

***SEE SHEET 9 FOR ADDITIONAL DIMENSIONS NOT SHOWN***

**PUGET SOUND NAVAL SHIPYARD**
**CODE 2370 -- ENGINEERING DIVISION**

**Unless otherwise specified, dimensions are in inches.**
Decimals:
X.X = ±0.13
X.XX = ±0.025
X.XXX = ±0.003
X.XXXX = ±0.0005
Fractions = ±1/16 < 36"
Fractions = ±1/8 > 36"
Angles = ±0.5°
Drawing dimensional and geometric tolerances per ASME Y14.5M-1994

NO DEVIATIONS SHALL BE MADE WITHOUT CODE 2370 APPROVAL

| DRAWING NO. | FSR | RF # |
|---|---|---|
| 2301-3853 | N/A | N/A |

TITLE
**PVOD BASE RING QUADRANTS**

| SCALE | | REV |
|---|---|---|
| AS SHOWN | Sheet 10 of 19 | Orig |

TITLE: PVOD BASE RING QUADRANTS
REV: Orig
SHEET: 10
DWG. NO.: 2301-3853

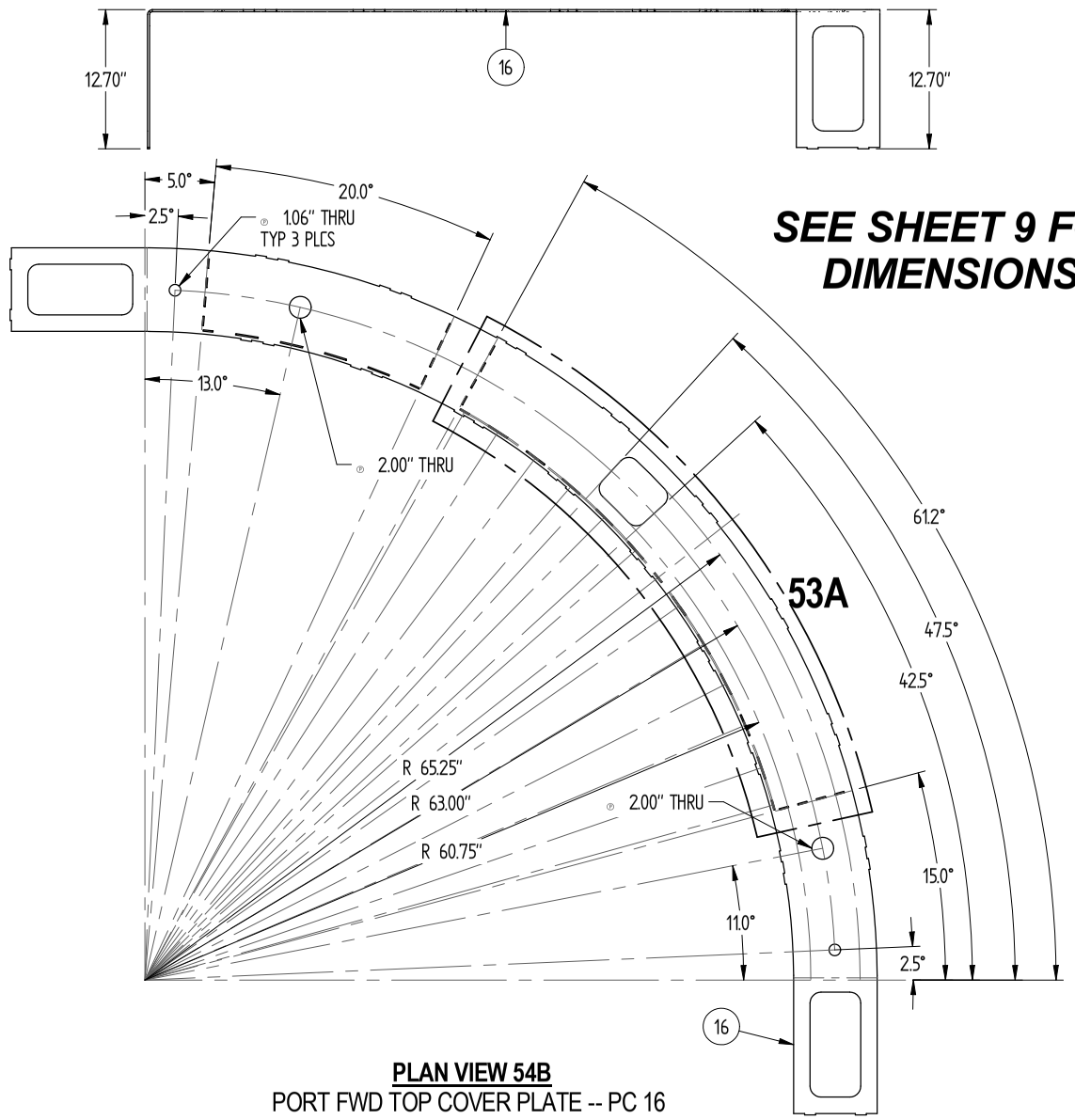


**PLAN VIEW 54B**
PORT FWD TOP COVER PLATE -- PC 16
FLAT PATTERN & BENDS

***SEE SHEET 9 FOR ADDITIONAL DIMENSIONS NOT SHOWN***

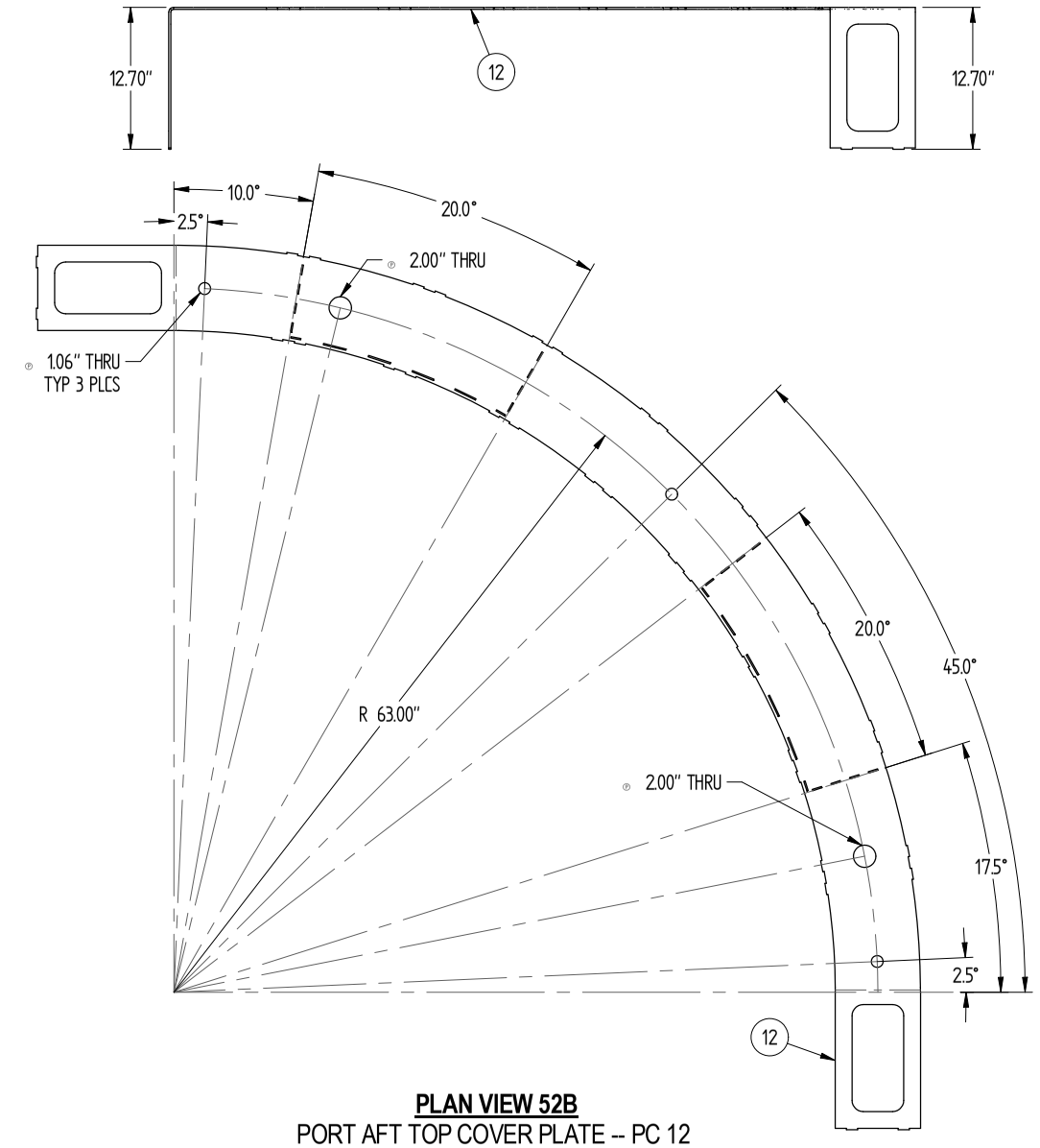


**PLAN VIEW 52B**
PORT AFT TOP COVER PLATE -- PC 12
FLAT PATTERN & BENDS

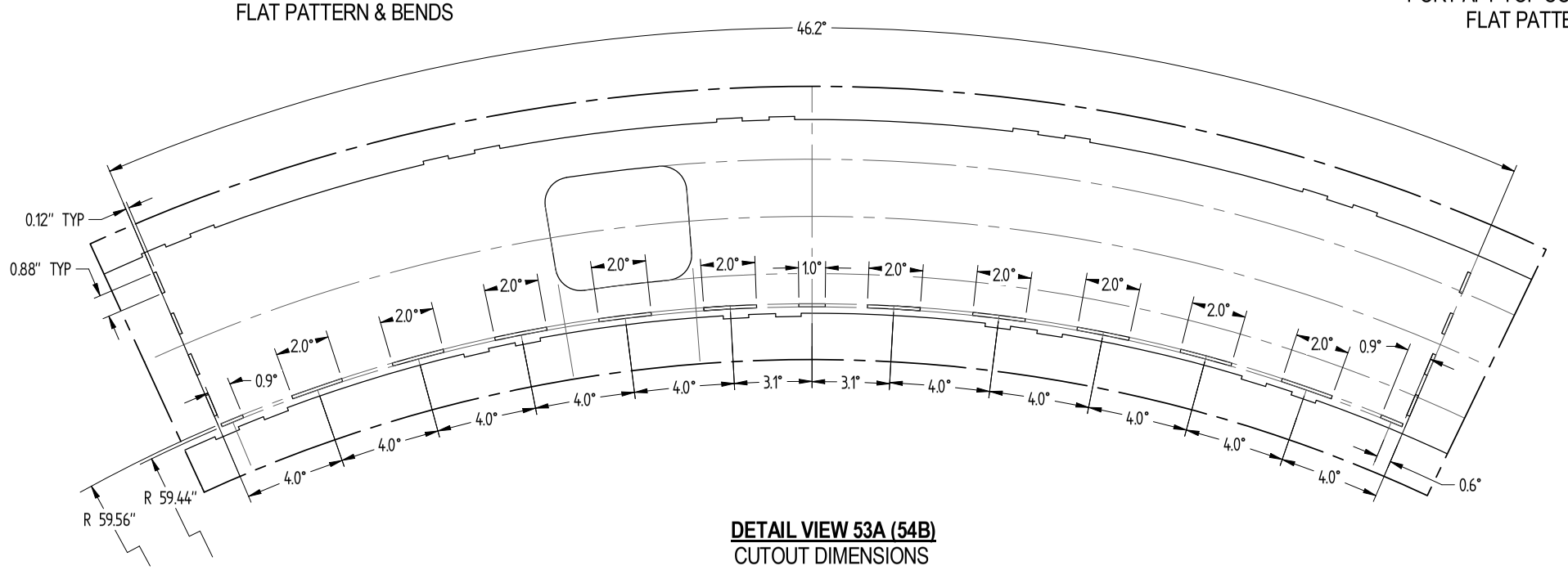


**DETAIL VIEW 53A (54B)**
CUTOUT DIMENSIONS

**PUGET SOUND NAVAL SHIPYARD**
**CODE 2370 -- ENGINEERING DIVISION**

**Unless otherwise specified, dimensions are in inches.**
Decimals:
X.X = ±0.13
X.XX = ±0.025
X.XXX = ±0.003
X.XXXX = ±0.0005
Fractions = ±1/16 < 36"
Fractions = ±1/8 > 36"
Angles = ±0.5°
Drawing dimensional and geometric tolerances per ASME Y14.5M-1994

NO DEVIATIONS SHALL BE MADE WITHOUT CODE 2370 APPROVAL

| DRAWING NO. | FSR | RF # |
|---|---|---|
| 2301-3853 | N/A | N/A |

TITLE
**PVOD BASE RING QUADRANTS**

| SCALE | | REV |
|---|---|---|
| AS SHOWN | Sheet 11 of 19 | Orig |

DWG. NO. 2301-3853 | TITLE PVOD BASE RING QUADRANTS | REV. Orig | SHEET 11

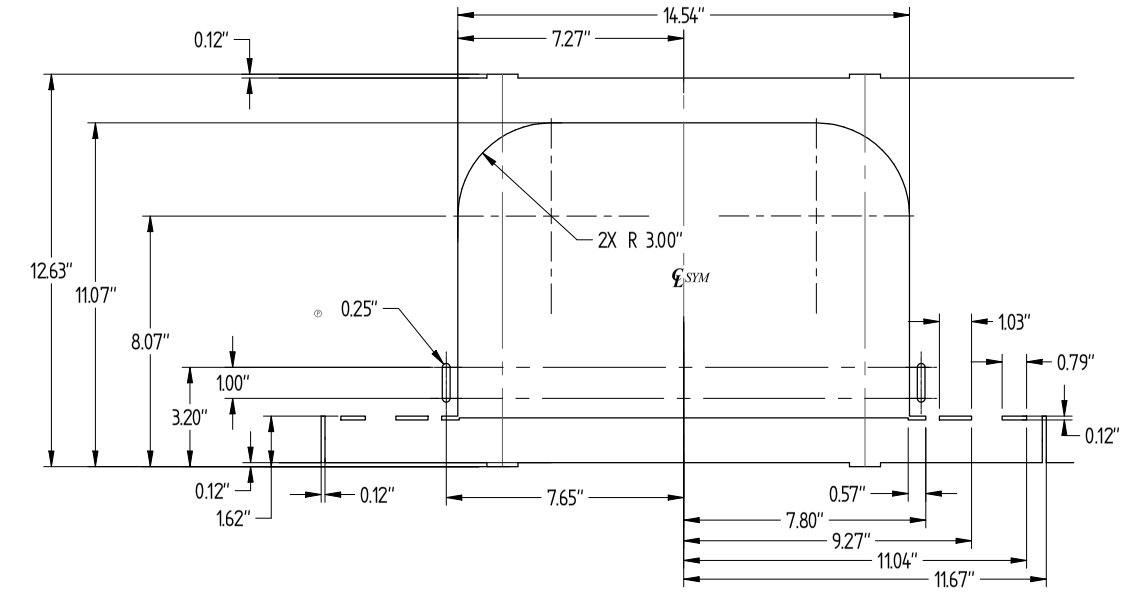


**DETAIL VIEW 56C (58A)**
TYPICAL 2 PLCS

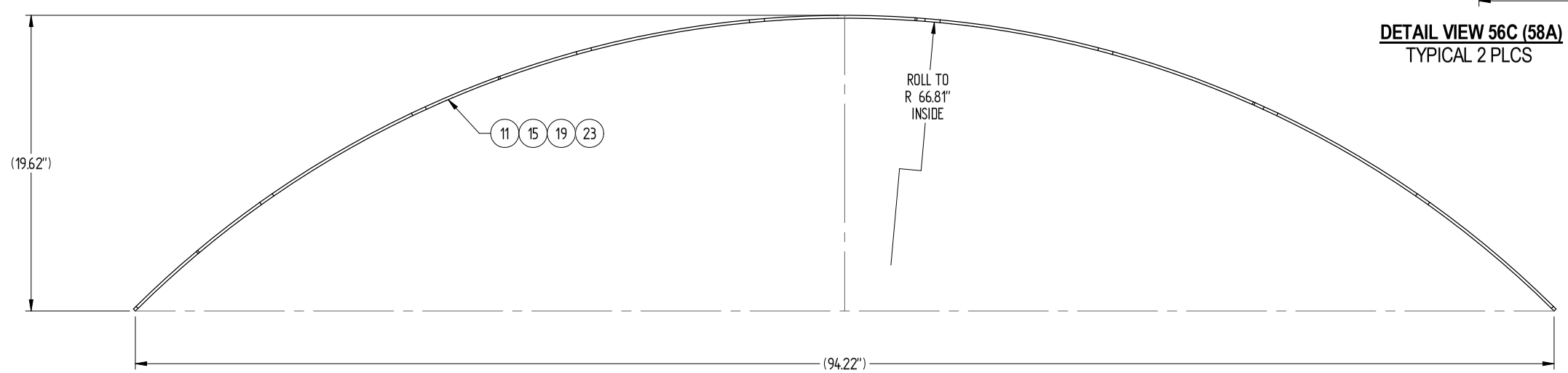


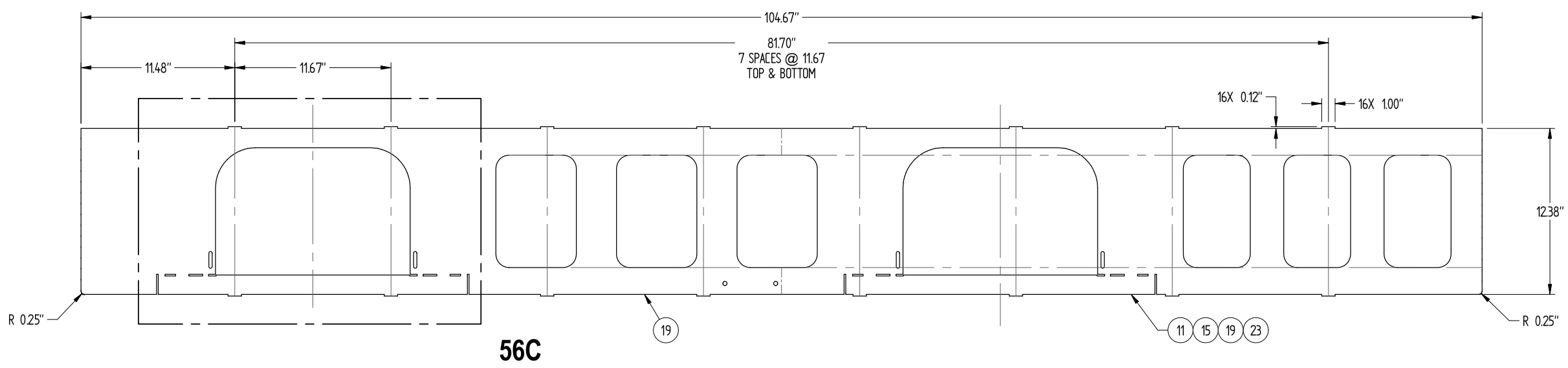


**PLAN VIEW 58A (62B, 62C, 64A, 64C)**
OUTER VERT PLATE DIMENSIONS
FLAT PATTERN & BENDS
TYPICAL

**PUGET SOUND NAVAL SHIPYARD**
**CODE 2370 -- ENGINEERING DIVISION**

**Unless otherwise specified, dimensions are in inches.**

Decimals:
X.X = ±0.13
X.XX = ±0.025
X.XXX = ±0.003
X.XXXX = ±0.0005
Fractions = ±1/16 < 36"
Fractions = ±1/8 > 36"
Angles = ±0.5°
Drawing dimensional and geometric tolerances per: ASME Y14.5M-1994

NO DEVIATIONS SHALL BE MADE WITHOUT CODE 2370 APPROVAL

| DRAWING NO. | FSR | RF # |
|---|---|---|
| 2301-3853 | N/A | N/A |

TITLE
**PVOD BASE RING QUADRANTS**

| SCALE | | REV |
|---|---|---|
| AS SHOWN | Sheet 12 of 19 | Orig |

SHEET 12 | REV Orig | TITLE PVOD BASE RING QUADRANTS | DWG. NO. 2301-3853

**SEE SHEET 12 FOR ADDITIONAL DIMENSIONS NOT SHOWN**

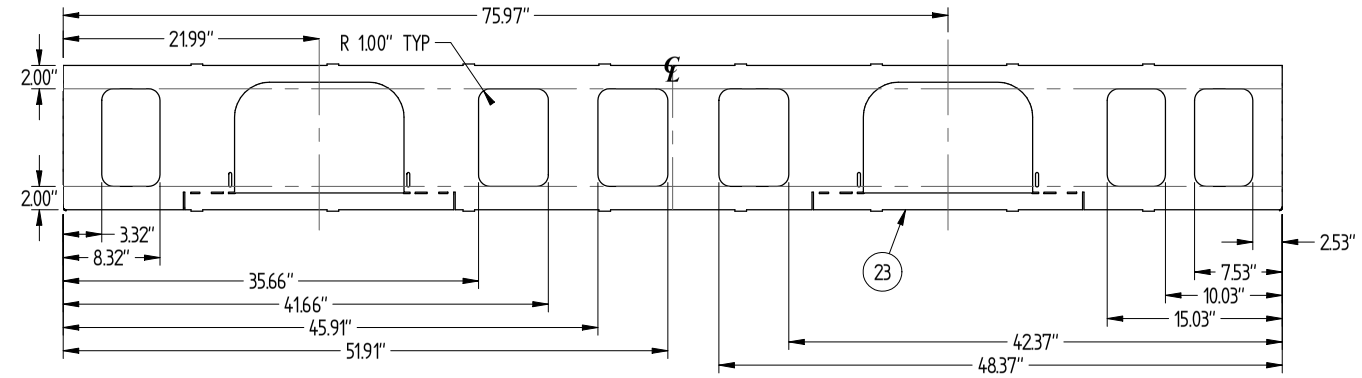


**PLAN VIEW 62C**
STBD FWD OUTER VERT PLATE -- PC 23
FLAT PATTERN

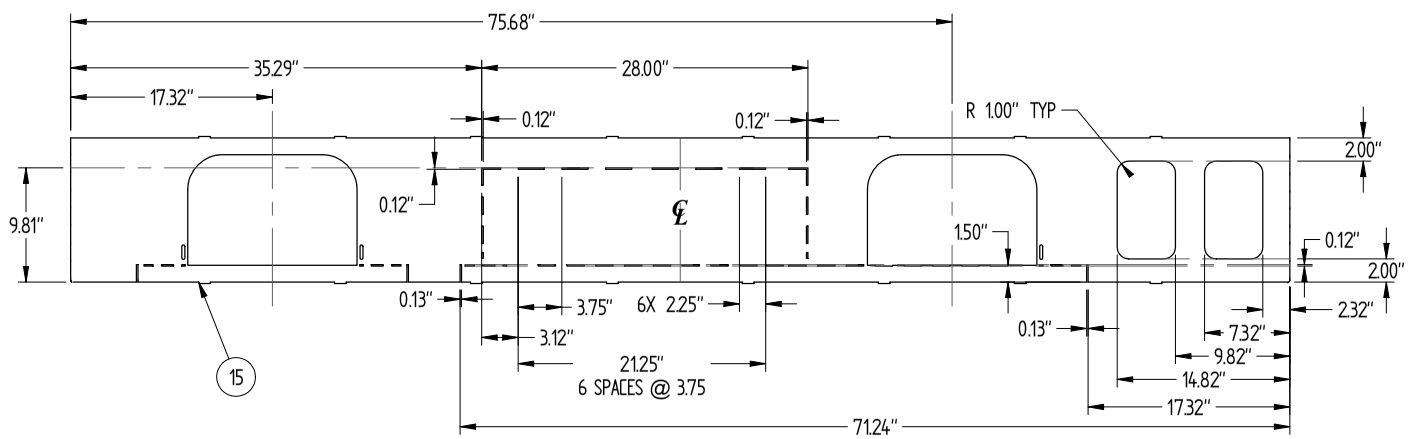


**PLAN VIEW 64C**
PORT FWD OUTER VERT PLATE -- PC 15
FLAT PATTERN

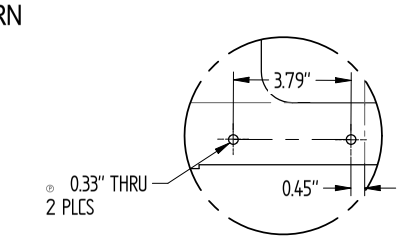


**DETAIL 61C**

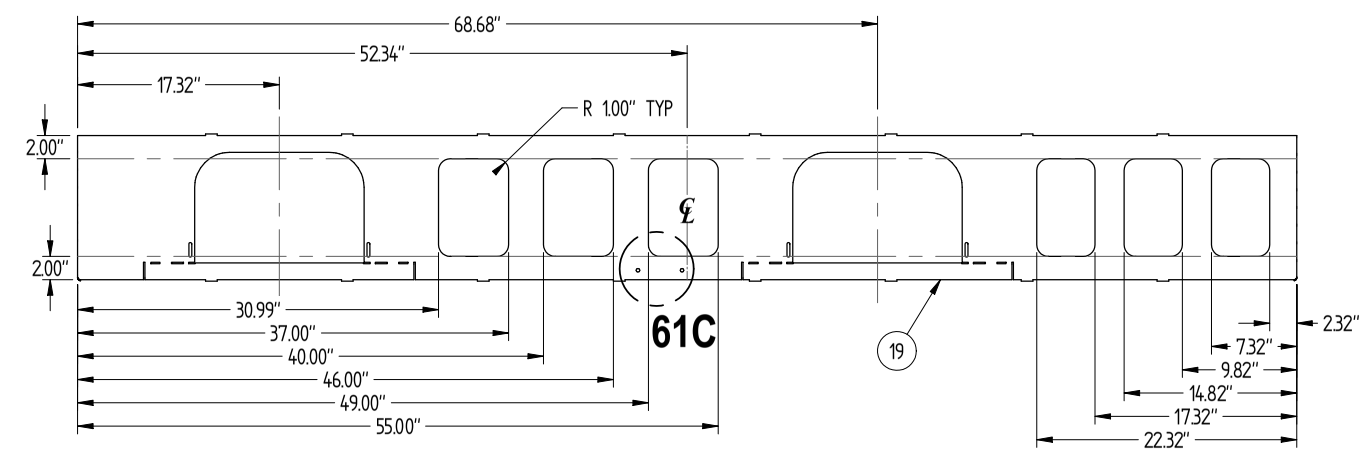


**PLAN VIEW 62B**
STBD AFT OUTER VERT PLATE -- PC 19
FLAT PATTERN

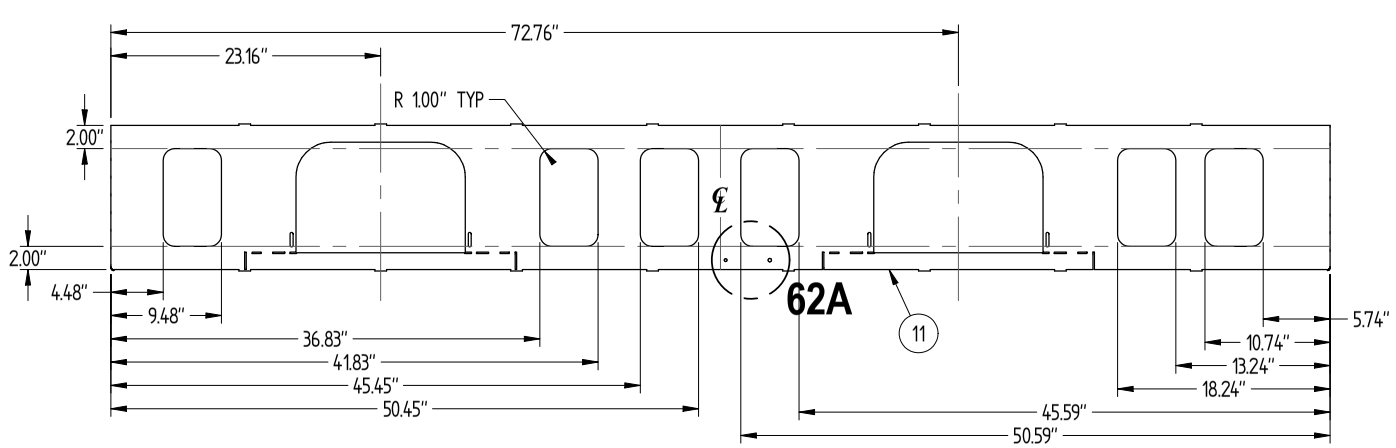


**PLAN VIEW 64A**
PORT AFT OUTER VERT PLATE -- PC 11
FLAT PATTERN

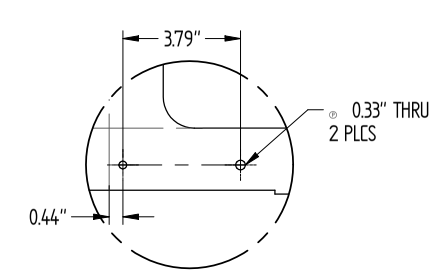


**DETAIL 62A**

**PUGET SOUND NAVAL SHIPYARD**
**CODE 2370 -- ENGINEERING DIVISION**

Unless otherwise specified, dimensions are in inches.
Decimals:
X.X = ±0.13
X.XX = ±0.025
X.XXX = ±0.003
X.XXXX = ±0.0005
Fractions = ±1/16 < 36"
Fractions = ±1/8 > 36"
Angles = ±0.5°
Drawing dimensional and geometric tolerances per ASME Y14.5M-1994

NO DEVIATIONS SHALL BE MADE WITHOUT CODE 2370 APPROVAL

| DRAWING NO | FSR | RF # |
|---|---|---|
| 2301-3853 | N/A | N/A |

TITLE
**PVOD BASE RING QUADRANTS**

SCALE: AS SHOWN | Sheet 13 of 19 | REV: Orig

DWG. NO. 2301-3853 | TITLE PVOD BASE RING QUADRANTS | REV. Orig | SHEET 13

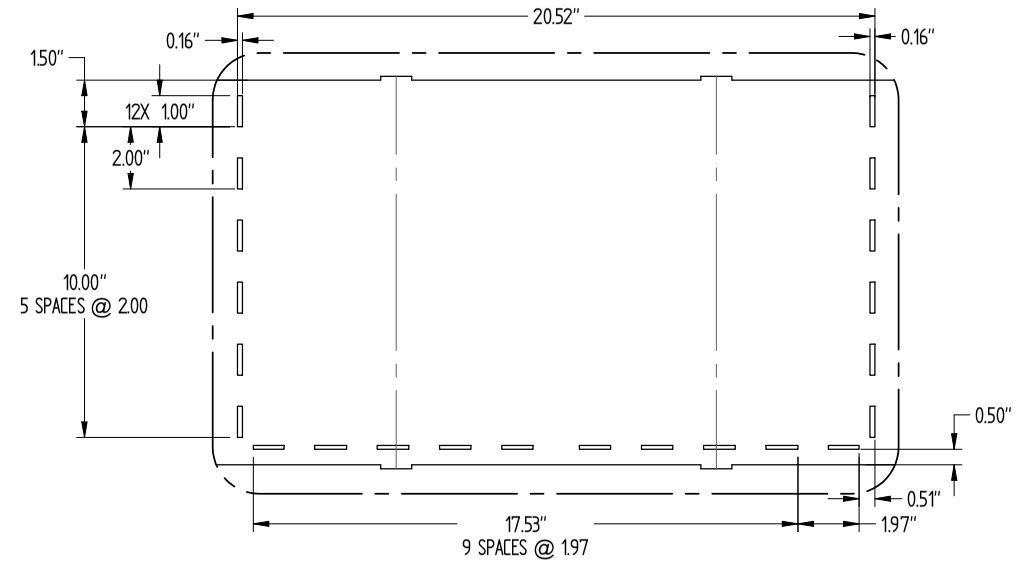


**DETAIL VIEW 66C (68A)**
CUTOUT TEMPLATE
TYPICAL 2 PLCS

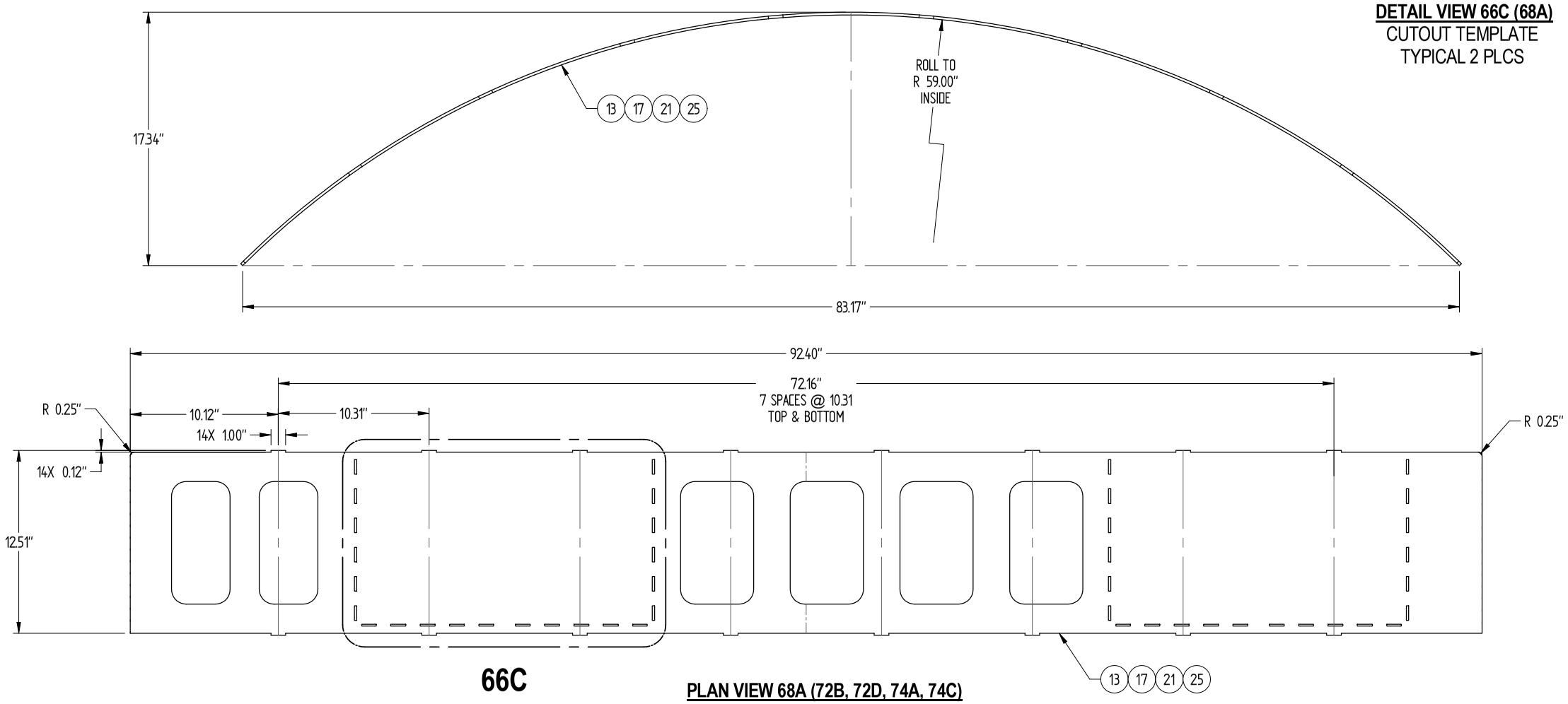


66C

**PLAN VIEW 68A (72B, 72D, 74A, 74C)**
INNER VERT PLATE DIMENSIONS
FLAT PATTERN & BENDS
TYPICAL

**PUGET SOUND NAVAL SHIPYARD**
**CODE 2370 -- ENGINEERING DIVISION**

**Unless otherwise specified, dimensions are in inches.**
Decimals:
X.X = ±0.13
X.XX = ±0.025
X.XXX = ±0.003
X.XXXX = ±0.0005
Fractions = ± 1/16 < 36"
Fractions = ± 1/8 > 36"
Angles = ±0.5°
Drawing dimensional and geometric tolerances per ASME Y14.5M-1994

NO DEVIATIONS SHALL BE MADE WITHOUT CODE 2370 APPROVAL

| DRAWING NO. | FSR | RF # |
|---|---|---|
| 2301-3853 | N/A | N/A |

TITLE
**PVOD BASE RING QUADRANTS**

| SCALE | | REV |
|---|---|---|
| AS SHOWN | Sheet 14 of 19 | Orig |

DWG. NO. 2301-3853 | TITLE PVOD BASE RING QUADRANTS | REV. Orig | SHEET 14

**SEE SHEET 14 FOR ADDITIONAL DIMENSIONS NOT SHOWN**

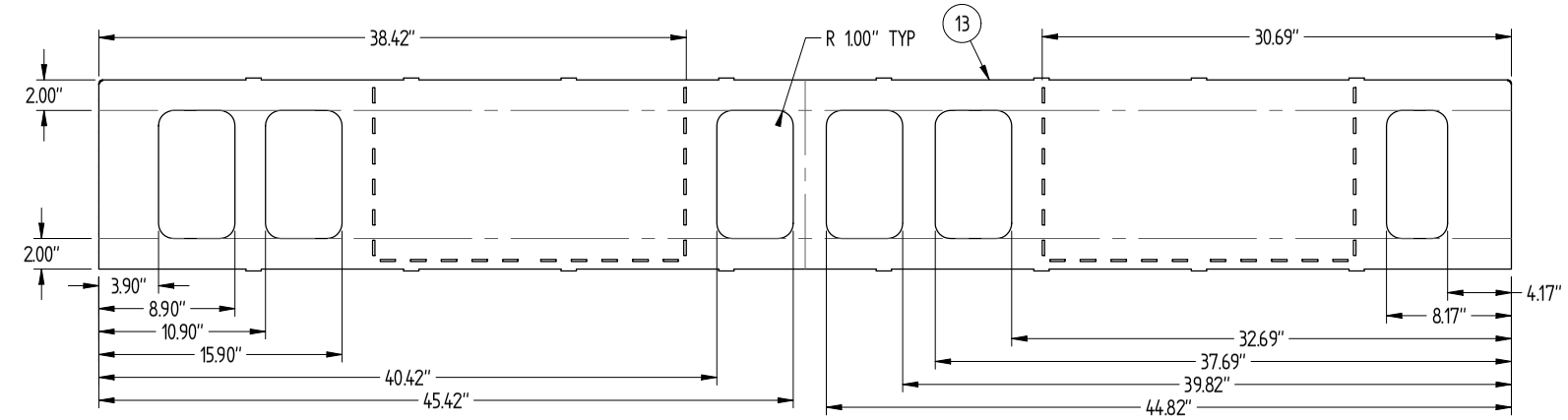


**PLAN VIEW 72D**
PORT AFT INNER VERT PLATE -- PC 13
FLAT PATTERN

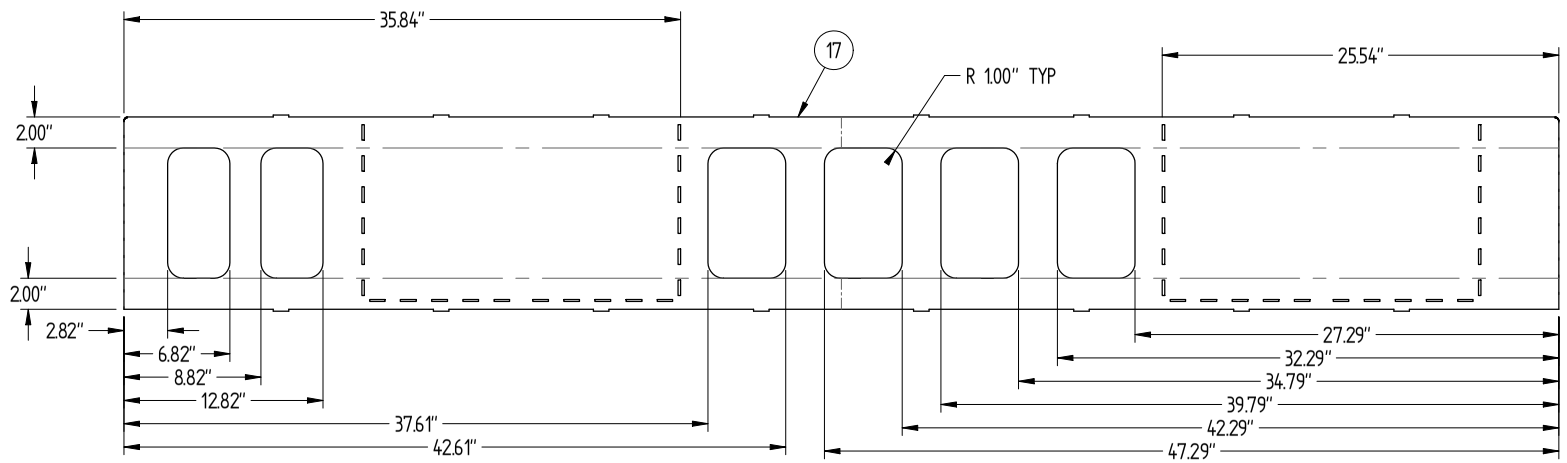


**PLAN VIEW 74C**
PORT FWD INNER VERT PLATE -- PC 17
FLAT PATTERN

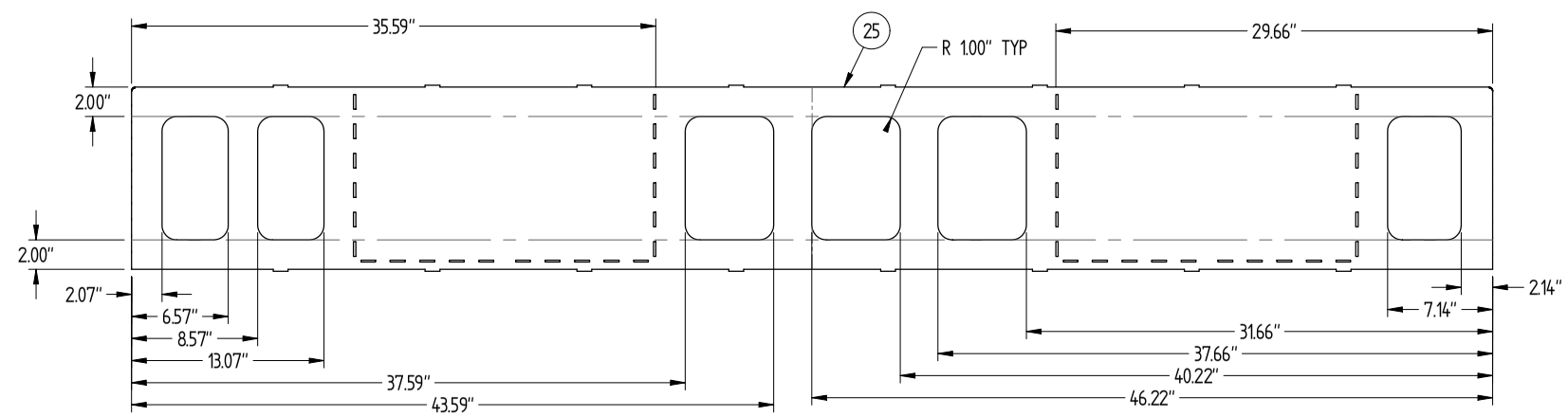


**PLAN VIEW 72B**
STBD FWD INNER VERT PLATE -- PC 25
FLAT PATTERN

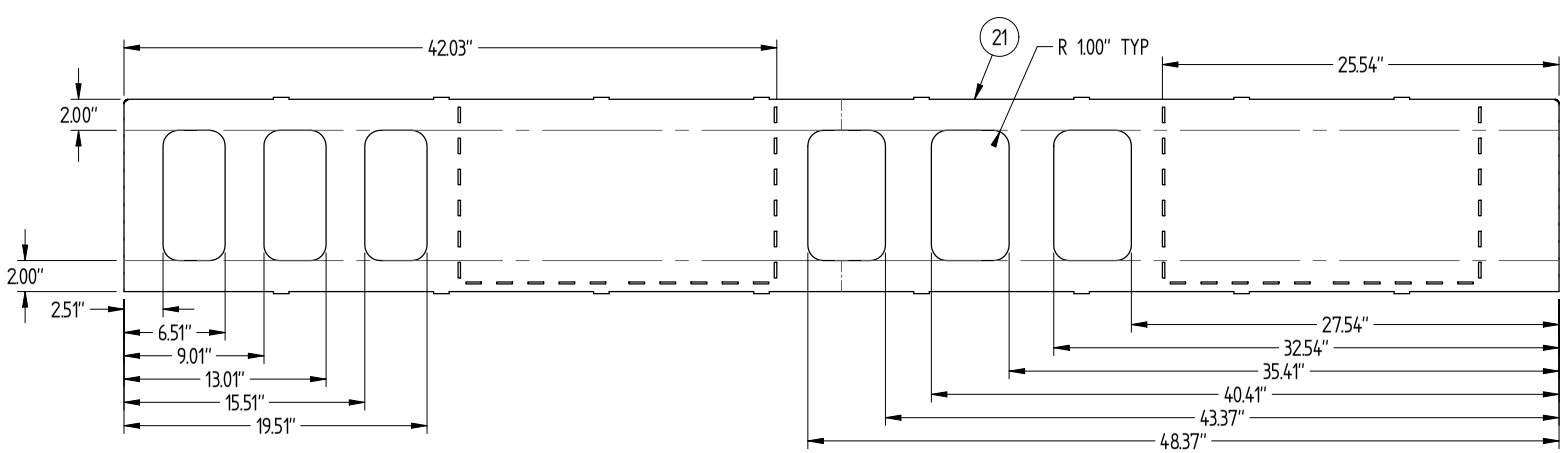


**PLAN VIEW 74A**
STBD AFT INNER VERT PLATE -- PC 21
FLAT PATTERN

**PUGET SOUND NAVAL SHIPYARD**
**CODE 2370 -- ENGINEERING DIVISION**

Unless otherwise specified, dimensions are in inches.
Decimals:
X.X = ±0.13
X.XX = ±0.025
X.XXX = ±0.003
X.XXXX = ±0.0005
Fractions = ±1/16 < 36"
Fractions = ±1/8 > 36"
Angles = ±0.5°
Drawing dimensional and geometric tolerances per ASME Y14.5M-1994

NO DEVIATIONS SHALL BE MADE WITHOUT CODE 2370 APPROVAL

| DRAWING NO. | FSR | RF # |
|---|---|---|
| 2301-3853 | N/A | N/A |

TITLE: **PVOD BASE RING QUADRANTS**

SCALE: **AS SHOWN** | **Sheet 15 of 19** | REV: **Orig**

DWG. NO. 2301-3853 | TITLE: PVOD BASE RING QUADRANTS | REV. Orig | SHEET 15

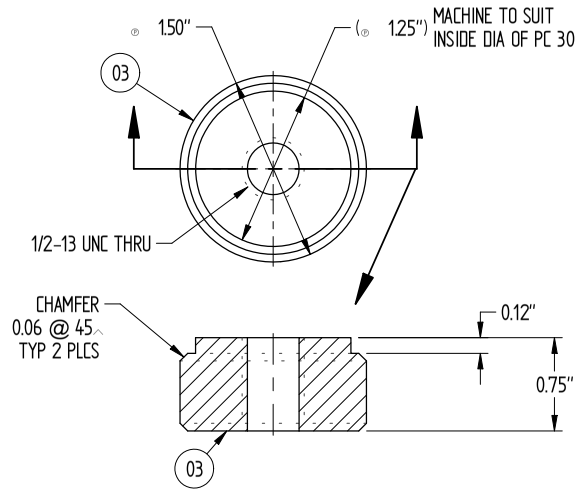


**DETAIL VIEW 80D (80B)**
THREADED LEG LUG -- PC 03

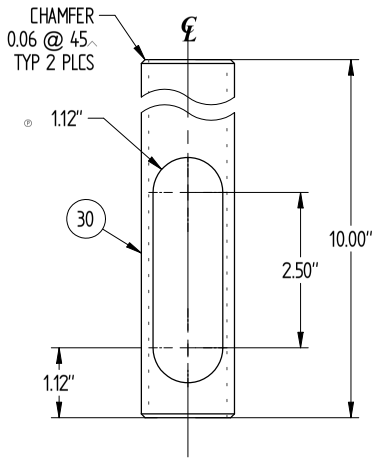


**DETAIL VIEW 79D (80B)**
SUPPORT TUBE -- PC 30

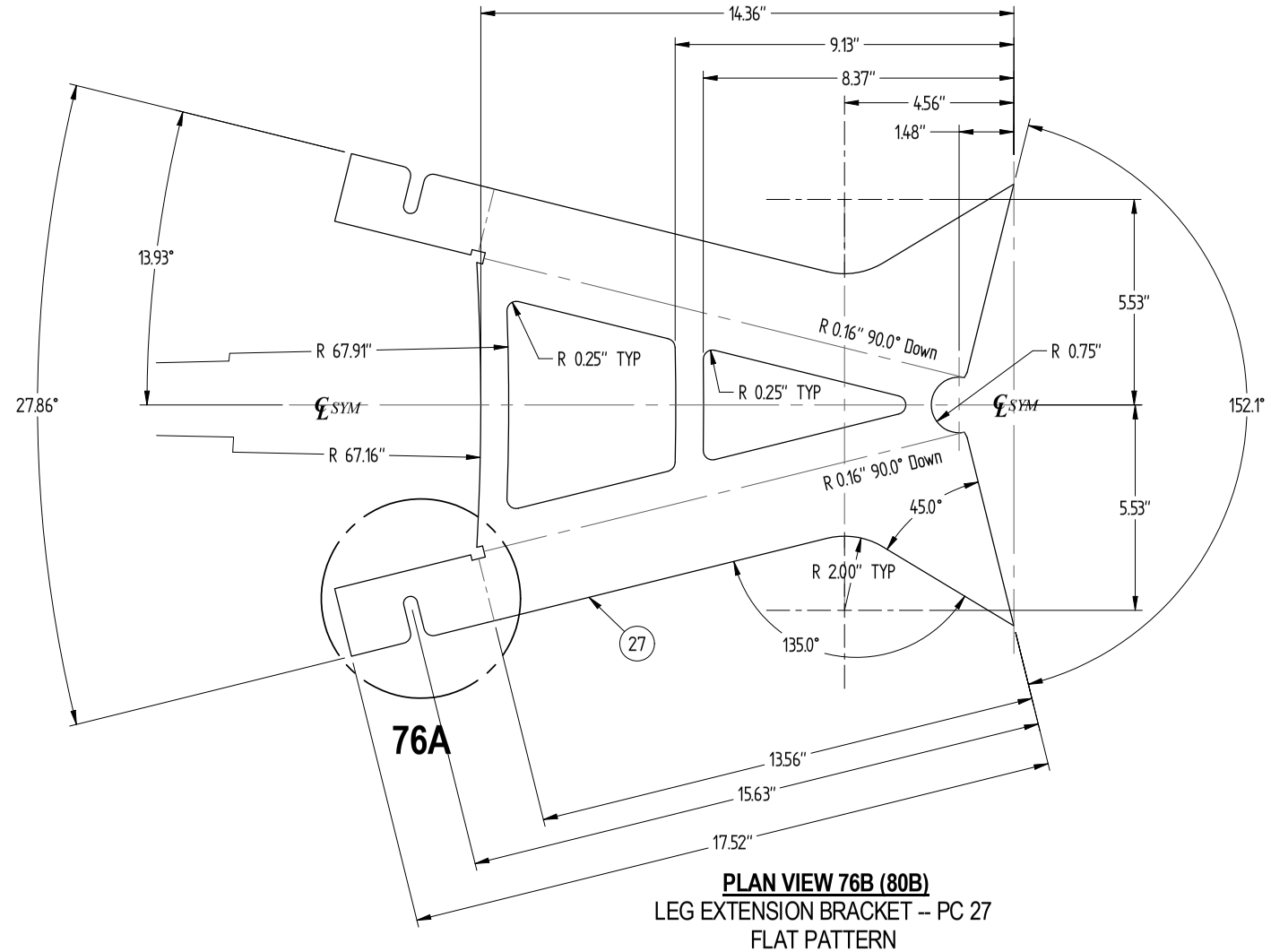


**PLAN VIEW 76B (80B)**
LEG EXTENSION BRACKET -- PC 27
FLAT PATTERN

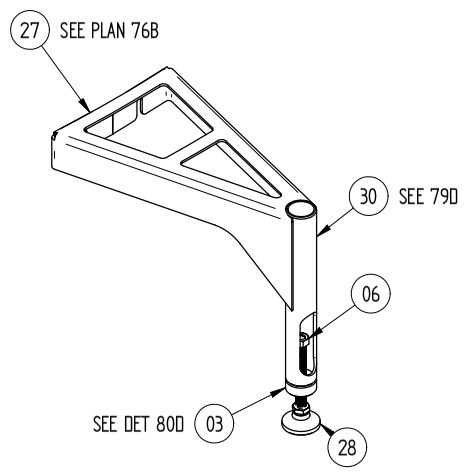


**DETAIL VIEW 80B**
ADJUSTABLE LEG ASSEMBLY
**TYP 2 PLCS**

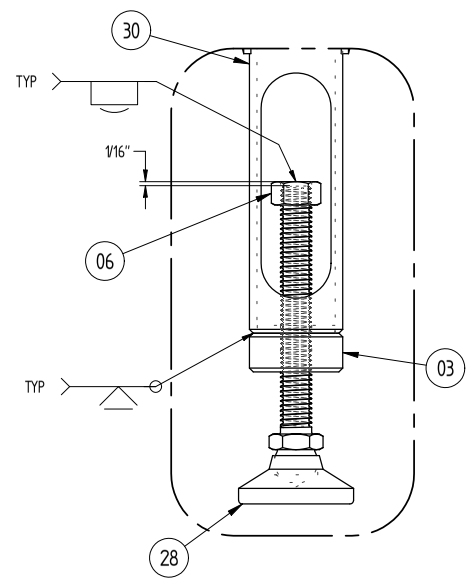


**DETAIL VIEW 79B (77A)**
SUPPORT TUBE AND LUG WELDMENT
TYPICAL 2 PLCS

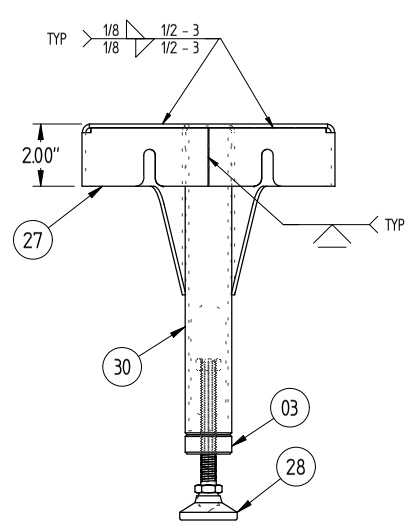


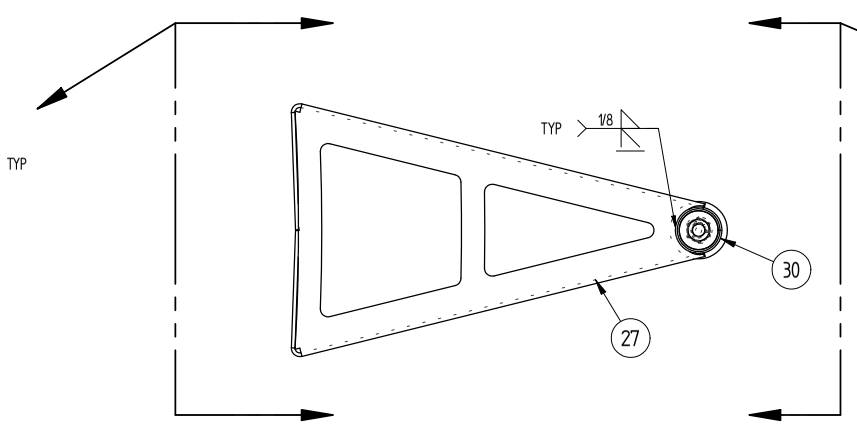


**DETAIL VIEW 79A**
ADJUSTABLE LEG ASSEMBLY
**TYP 2 PLCS**

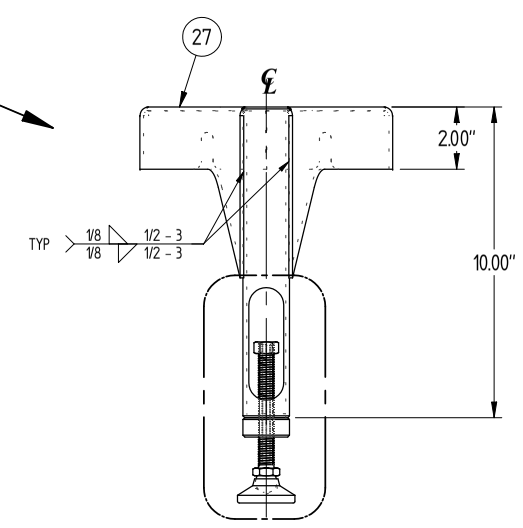


**77A**

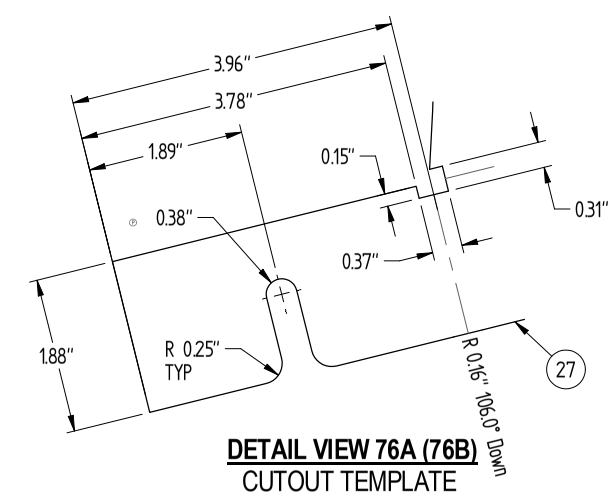


**DETAIL VIEW 76A (76B)**
CUTOUT TEMPLATE
TYPICAL 2 PLCS

**PUGET SOUND NAVAL SHIPYARD**
**CODE 2370 -- ENGINEERING DIVISION**

Unless otherwise specified, dimensions are in inches.
Decimals:
X.X = ±0.13
X.XX = ±0.025
X.XXX = ±0.003
X.XXXX = ±0.0005
Fractions = ±1/16 < 36"
Fractions = ±1/8 > 36"
Angles = ±0.5°
Drawing dimensional and geometric tolerances per: ASME Y14.5M-1994

NO DEVIATIONS SHALL BE MADE WITHOUT CODE 2370 APPROVAL

| DRAWING NO. | FSR | RF # |
|---|---|---|
| 2301-3853 | N/A | N/A |

TITLE
**PVOD BASE RING QUADRANTS**

| SCALE | | REV |
|---|---|---|
| AS SHOWN | Sheet 16 of 19 | Orig |

TITLE: PVOD BASE RING QUADRANTS
REV: Orig
SHEET: 16
DWG. NO: 2301-3853

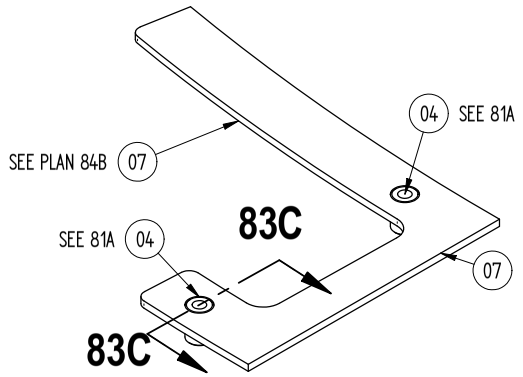


**ISOMETRIC VIEW 85D**
TOP COVER SUPPORT PLATE ASSEMBLY -- LONG
TYP 1 PLCS

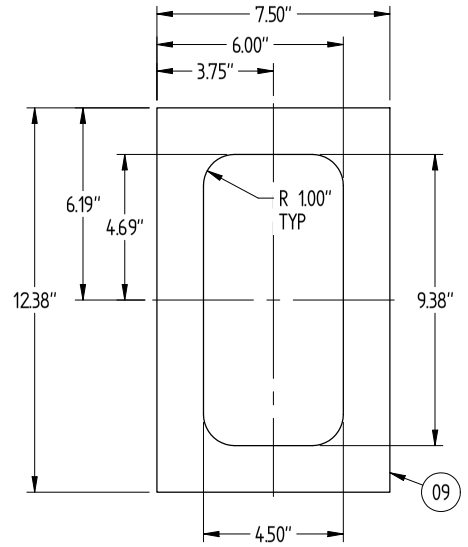


**PLAN VIEW 83D**
SUPPORT PLATE -- PC 09
TYPICAL 15 PLCS

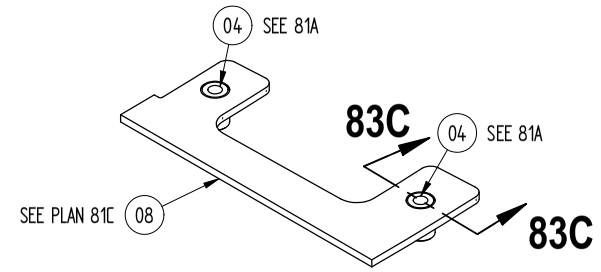


**ISOMETRIC VIEW 82D**
TOP COVER SUPPORT PLATE ASSEMBLY -- RIGHT
TYP 8 PLCS

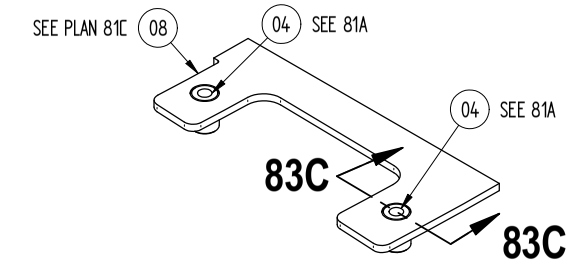


**ISOMETRIC VIEW 81D**
TOP COVER SUPPORT PLATE ASSEMBLY -- LEFT
TYP 7 PLCS

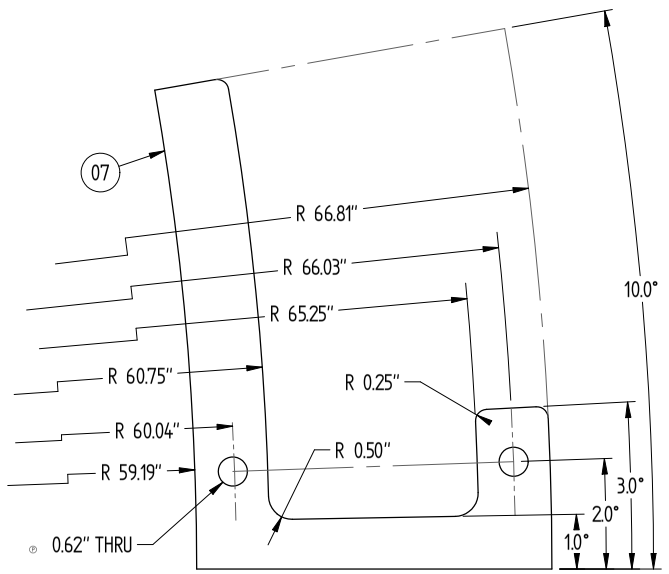


**PLAN VIEW 84B (85D)**
TOP COVER SUPPORT PLATE -- PC 07

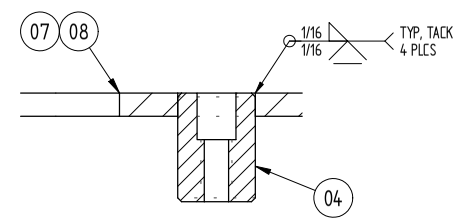


**DETAIL VIEW 83C (81D, 82D, 85D)**
CAPTIVE FASTENER LUG WELDMENT
TYPICAL

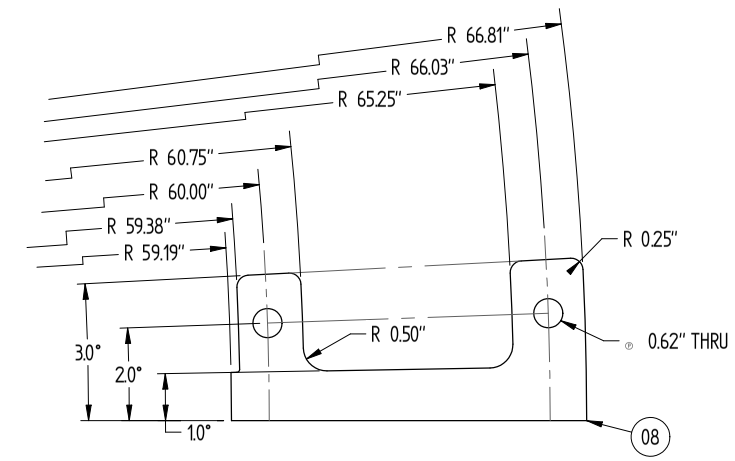


**PLAN VIEW 81C (81D, 82D)**
TOP COVER SUPPORT PLATE -- PC 08

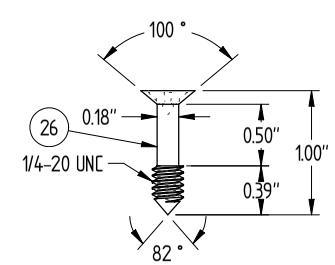


**DETAIL VIEW 85A (8A)**
CAPTIVATED SCREW
TYPICAL 32 PLCS

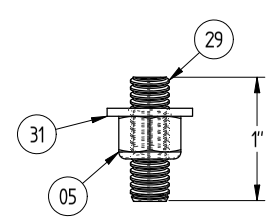


**DETAIL VIEW 84A (28C)**
STUD ASSEMBLY
TYPICAL 20 PLCS

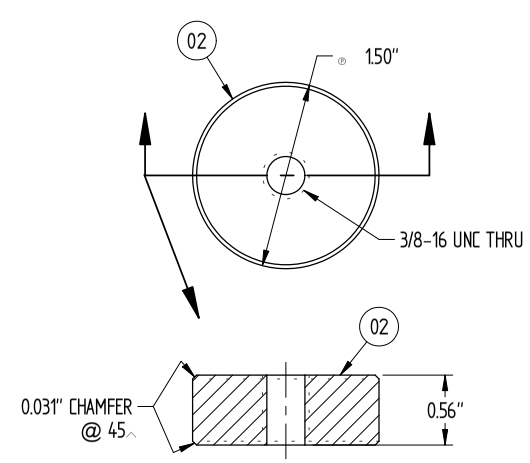


**DETAIL VIEW 83A (30A)**
HOIST RING BLOCK -- PC 02
TYPICAL 1 PLC

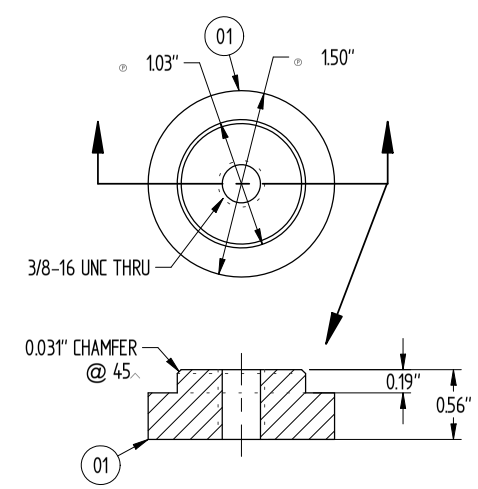


**DETAIL VIEW 82A (29A)**
HOIST RING BLOCK -- PC 01
TYPICAL 11 PLCS

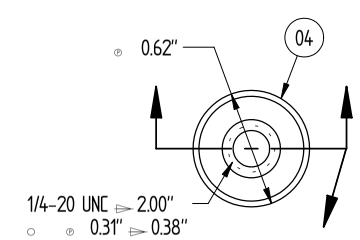


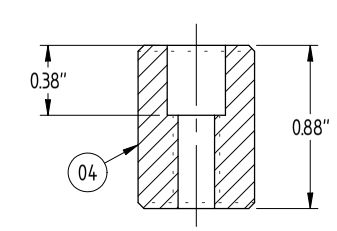


**DETAIL VIEW 81A (81D, 82D, 85D)**
CAPTIVE FASTENER LUG -- PC 04

**PUGET SOUND NAVAL SHIPYARD**
CODE 2370 -- ENGINEERING DIVISION

Unless otherwise specified, dimensions are in inches.
Decimals:
X.X = ±0.13
X.XX = ±0.025
X.XXX = ±0.003
X.XXXX = ±0.0005
Fractions = ±1/16 < 36"
Fractions = ±1/8 > 36"
Angles = ±0.5°
Drawing dimensions at and geometric tolerances per ASME Y14.5M-1994

NO DEVIATIONS SHALL BE MADE WITHOUT CODE 2370 APPROVAL

| DRAWING NO. | FSR | RF # |
|---|---|---|
| 2301-3853 | N/A | N/A |

TITLE
**PVOD BASE RING QUADRANTS**

| SCALE | | REV |
|---|---|---|
| AS SHOWN | Sheet 17 of 19 | Orig |

TITLE: PVOD BASE RING QUADRANTS
REV: Orig
SHEET: 17
DWG. NO. 2301-3853

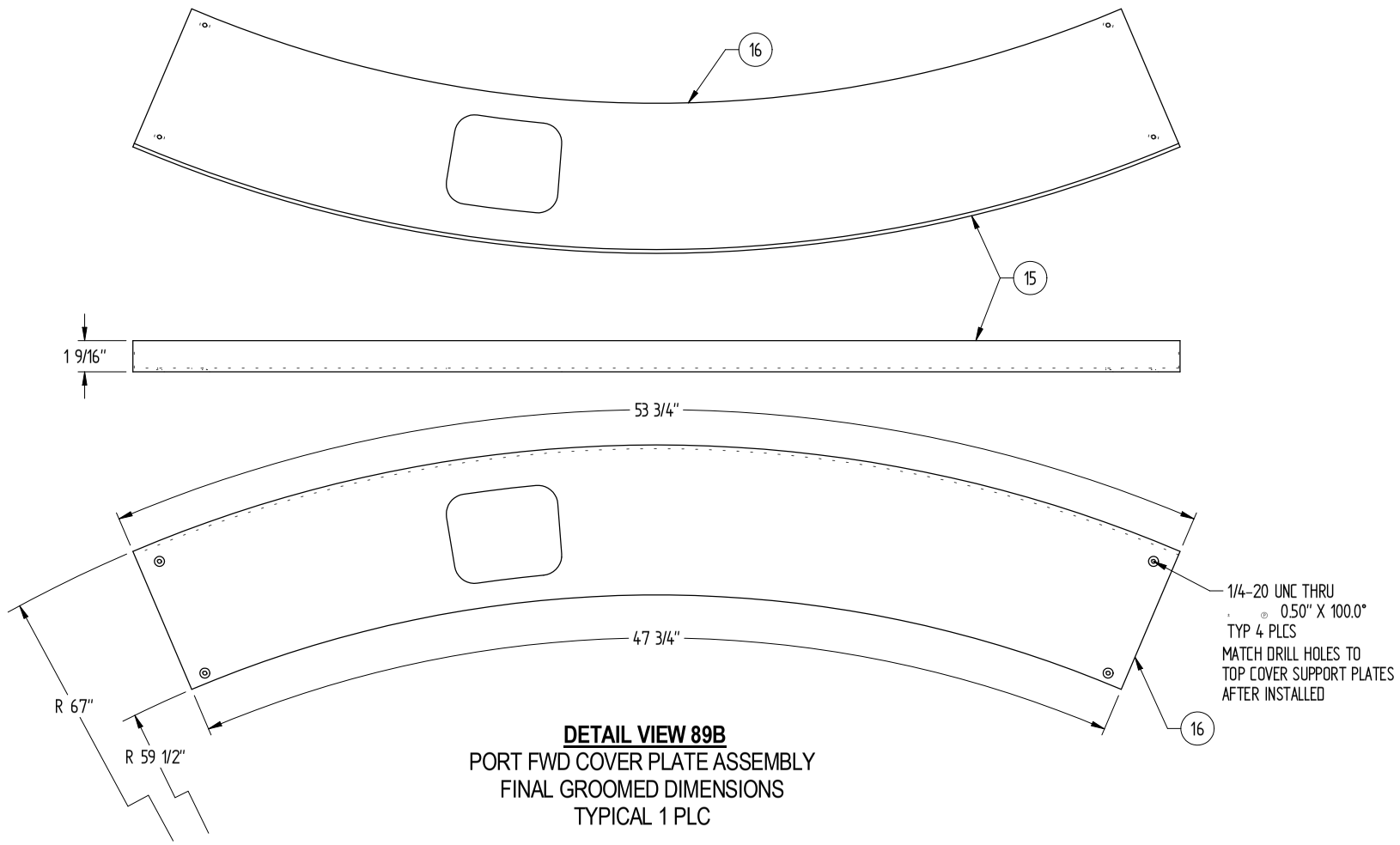


**DETAIL VIEW 89B**
PORT FWD COVER PLATE ASSEMBLY
FINAL GROOMED DIMENSIONS
TYPICAL 1 PLC

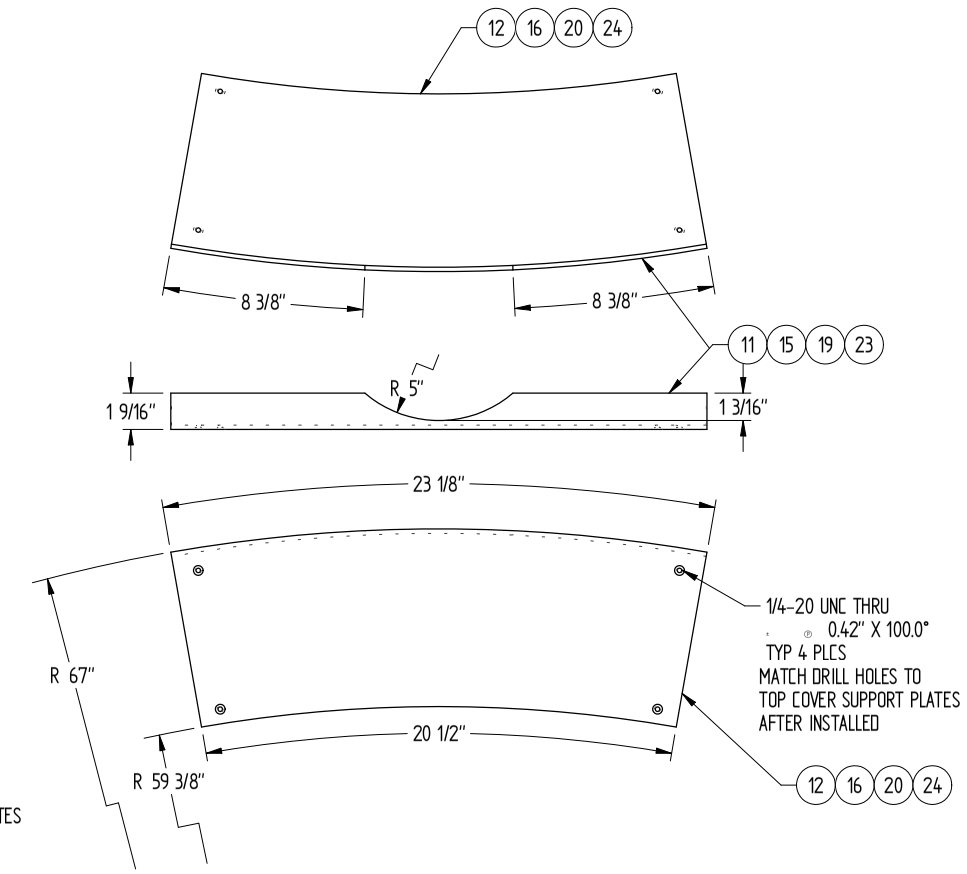


**DETAIL VIEW 86B**
COVER PLATE ASSEMBLY
FINAL GROOMED DIMENSIONS
TYPICAL 7 PLCS

**PUGET SOUND NAVAL SHIPYARD**
**CODE 2370 -- ENGINEERING DIVISION**

**Unless otherwise specified, dimensions are in inches.**
Decimals:
X.X = ±0.13
X.XX = ±0.025
X.XXX = ±0.003
X.XXXX = ±0.0005
Fractions = ±1/16 < 36"
Fractions = ±1/8 > 36"
Angles = ±0.5°
Drawing dimensional and geometric tolerances per ASME Y14.5M-1994

NO DEVIATIONS SHALL BE MADE
WITHOUT CODE 2370 APPROVAL

| DRAWING NO. | FSR | RF # |
|---|---|---|
| 2301-3853 | N/A | N/A |

TITLE
**PVOD BASE RING QUADRANTS**

| SCALE | | REV |
|---|---|---|
| AS SHOWN | Sheet 18 of 19 | Orig |

DWG. NO. 2301-3853 | TITLE PVOD BASE RING QUADRANTS | REV Orig | SHEET 18

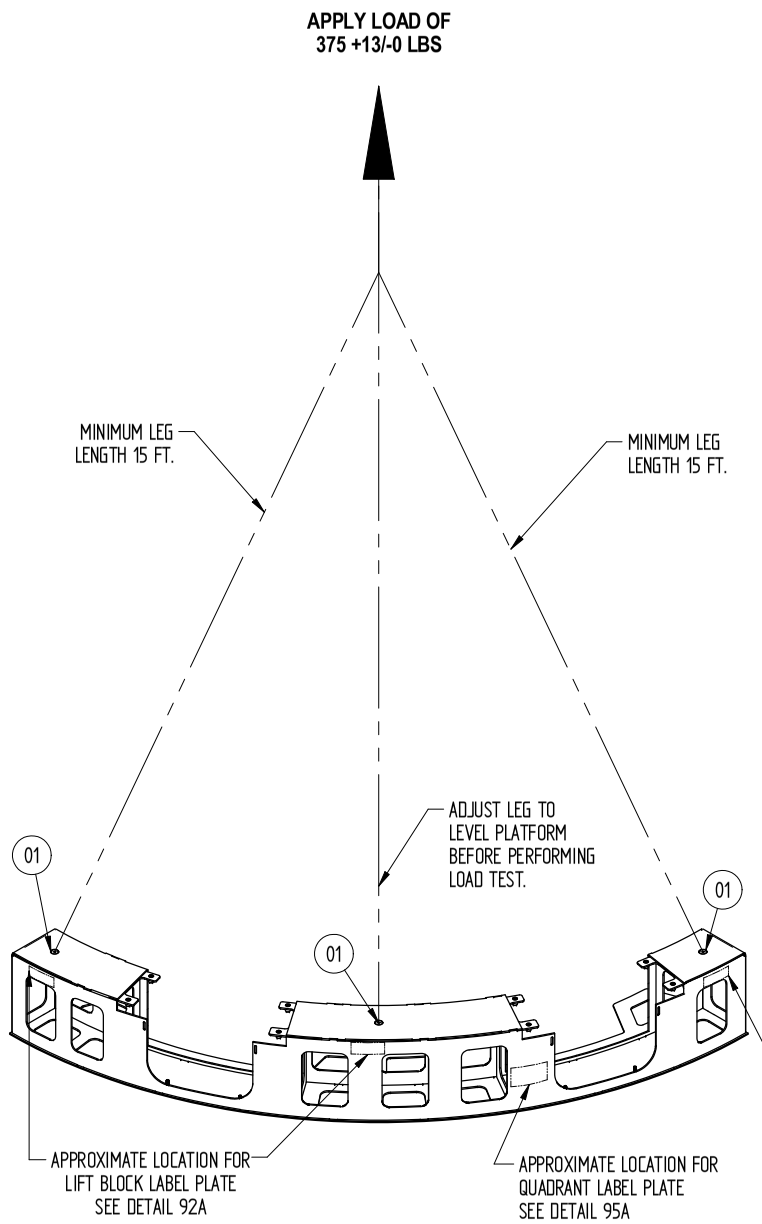


**DETAIL VIEW 94B**
LIFT CONFIGURATION AND LABEL LOCATIONS
FOR PORT AFT, STBD FWD & STBD AFT QUADRANTS

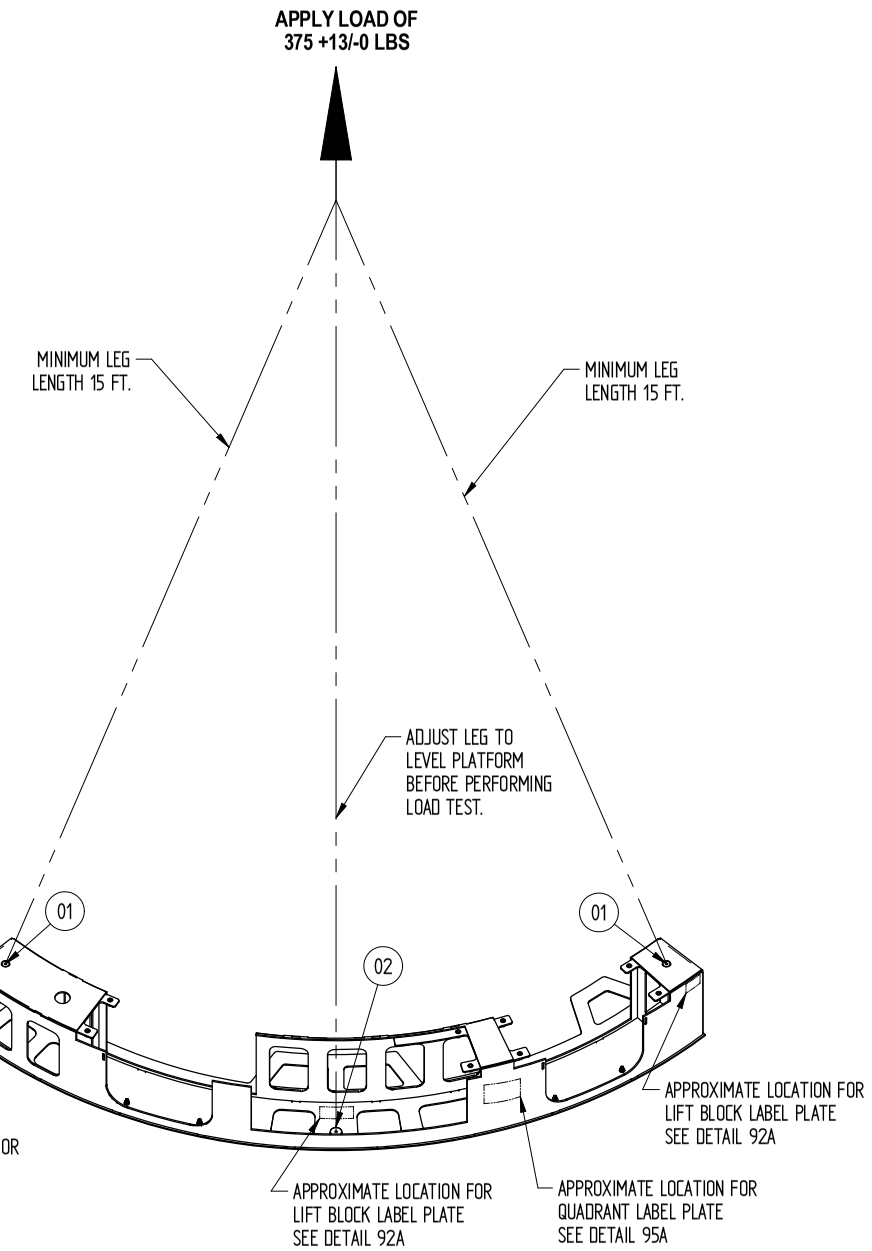


**DETAIL VIEW 93B**
LIFT CONFIGURATION AND LABEL LOCATIONS
FO PORT FWD QUADRANT

## LOAD TESTING OF LIFT BLOCKS (PC 01 & PC 02) ON EACH RING QUADRANT:

1. **DOCUMENTATION:** CONTRACTOR SHALL PERFORM AND PROVIDE WRITTEN DOCUMENTATION TO PSNS & IMF THAT THE NON-DESTRUCTIVE TESTING (NDT), LOAD TEST(S) AND WEIGHT MEASUREMENTS REQUIRED BY THIS DRAWING HAVE BEEN SATISFACTORILY PERFORMED. ENSURE DOCUMENTATION CLEARLY SPECIFIES PERFORMANCE OF "PRE" AND "POST" LOAD NDT'S, METHOD USED (***NAVSEA T9074-AS-GIB-010/271 REQUIRED***), ACCEPTANCE CRITERIA USED (***MIL-STD-2035 REQUIRED***), AND ITEMS (PIECES AND WELDS) THAT WERE INSPECTED. SEE GENERAL NOTE 11.K ON SHEET 1 OF THIS DRAWING FOR QUALIFIED NDT PROCEDURE REQUIREMENT.

2. **PRIOR TO PERFORMING PROOF TEST OF RING QUADRANTS**:

   a. ENSURE WELDS SECURING HOIST RING LIFT BLOCKS (PC 01 & PC 02) ONTO EACH RING QUADRANT IS PROPERLY SIZED AND INSTALLED AS SHOWN IN SECTION VIEWS 29A & 30A.

   b. CLEAN INTERNAL THREADS OF 3/8"-16 UNC THREADED HOLES IN HOIST RING LIFT BLOCK (PC 01 AND PC 02). PERFORM A VISUAL 1X INSPECTION OF THE THREADS, PC 01 AND PC 02 AND ATTACHMENT WELDS AROUND PC 01 AND PC 02. THREADS AND WELDS SHALL BE FREE OF VISIBLE DAMAGE, DEFORMATION, CORROSION, DIRT, DEBRIS AND LUBRICATION. *PROVIDE DOCUMENTATION PER NOTE 1.*

   c. WEIGH EACH RING QUADRANT AND RECORD THE WEIGHT TO AN ACCURACY OF +/- 10 LBS. DOCUMENT WEIGHT OF EACH RING QUADRANT TO RECORD WEIGHT DATA ON RING QUADRANT. IF TOTAL WEIGHT EXCEEDS 250 LBS, CONTACT PSNS & IMF FOR EVALUATION.

3. **PERFORM 150% PROOF TESTS OF EACH RING QUADRANT AS FOLLOWS**:

   THE WEIGHT OF THE HEAVIEST RING QUADRANT IS APPROX 210 LBS. THE TEST LOAD FOR THE HOIST RING BLOCKS IS BASED ON 3 POINTS CARRYING THE LOAD. PROOF TEST LOAD WILL CONSERVATIVELY BE BASED ON THE HEAVIEST RING QUADRANT WEIGHT PLUS AN ADDITIONAL WEIGHT OF 40 LBS FOR VENT PLENUMS. THE APPLIED LOAD BASED ON 150 +5/-0 % OF 250 LBS WILL BE BETWEEN 375 LBS AND 388 LBS. PSNS & IMF HAS PERFORMED ANALYSIS ON ALL LIFTING ATTACHMENTS ASSOCIATED WITH THIS PLATFORM SYSTEM AND DETERMINED THAT EACH ATTACHMENT SATISFIES 10:1 FACTOR OF SAFETY. ANALYSIS IS DOCUMENTED IN REFERENCE 4.

   PERFORM LOAD TEST AS FOLLOWS:

   a. CAREFULLY APPLY UNIFORMILY DISTRIBUTED WEIGHTS TO EACH RING QUADRANT OR SECURE/RESTRAIN THE RING QUADRANT AS REQUIRED USING CONTRACTOR FURNISHED HARDWARE TO RESIST THE PROOF TEST LOAD SPECIFIED IN DETAIL VIEWS 93B & 94B. ENSURE WEIGHTS OR RESTRAINTS ARE POSITIONED CLOSE TO EACH LIFT BLOCK TO PREVENT TWISTING OF RING QUADRANT DURING LOAD TEST.

   b. INSTALL 3/8"-16 UNC SIZE SAFETY HOIST RINGS AND SUITABLE SIZED PENDANTS OR GROMMETS TO APPLY PROOF TEST LOAD SHOWN IN DETAIL VIEWS 93B & 94B. APPLY THE TORQUE SPECIFIED BY THE HOIST RING MANUFACTURER. DO NOT LUBRICATE THREADED HOIST RING HOLES.

   c. APPLY PROOF TEST LOAD AS SHOWN IN DETAIL VIEWS 93B & 94B AS SHOWN FOR 10 MINUTES (MIN). PROVIDE DOCUMENTATION OF SATISFACTORY LOAD TEST AND RECORD THE LOAD APPLIED.

4. **AFTER PROOF TEST OF EACH RING QUADRANT**:

   a. ENSURE NO SIGNS OF DAMAGE OR DEFORMATION ARE OBSERVED.

   b. PERFORM LIQUID PENETRANT TESTS (PT) PER REFERENCE 5 (PSNS DWG 2301-3411) OF ALL ACCESSIBLE SURFACES OF EACH HOIST RING BLOCK (PC 01) AND THE WELD THAT SECURES PC 01 TO RING QUADRANT TOP COVER (PC 12, 16, 20, AND 24). *PROVIDE DOCUMENTATION PER NOTE 1.*

   c. PERFORM LIQUID PENETRANT TESTS (PT) PER REFERENCE 5 (PSNS DWG 2301-3411) OF ALL ACCESSIBLE SURFACES OF EACH HOIST RING BLOCK (PC 02) AND THE WELD THAT SECURES PC 02 TO RING QUADRANT BASE PLATE (PC 14). *PROVIDE DOCUMENTATION PER NOTE 1.*

   d. CLEAN INTERNAL THREADS OF 3/8"-16UNC THREADED HOLES IN HOIST RING LIFT BLOCK (PC 01 & PC 02). PERFORM A VISUAL 1X INSPECTION OF THE THREADS, PC 01 & PC 02 AND ATTACHMENT WELDS AROUND PC 01 & PC 02. THREADS AND WELDS SHALL BE FREE OF VISIBLE DAMAGE, DEFORMATION, CORROSION, DIRT, DEBRIS AND LUBRICATION. *PROVIDE DOCUMENTATION PER NOTE 1.*

   e. PERFORM A "2B" GO/NO-GO GAUGE CHECK OF EACH HOIST RING LIFT HOLE IN PC 01 & PC 02 PER REFERENCE 5 (PSNS DWG. 2301-3411). *PROVIDE DOCUMENTATION PER NOTE 1.*

   f. APPLY THE INFORMATION SHOWN IN DETAIL VIEWS 34A AND 33A IN THE LOCATIONS SHOWN IN DETAIL VIEWS 93B & 94B. SEE NOTE 5 FOR LABELING REQUIREMENTS.

5. **LABELING REQUIREMENTS:**

   a. STENCIL USING PAINT OR PERMANENT MARKER THE FOLLOWING INFORMATION, AS SHOWN IN VIEW 33A, USING 3/16" TALL (MIN.) BOLD BLACK LETTERING. THIS LABEL SHALL BE LOCATED NEAR EACH OF THE THREE LIFT BLOCKS, AS SHOWN IN VIEWS 93B & 94B.

      i. **LABELING OPTION:** THE USE OF BLACK VINYL LETTERING IS AUTHORIZED AS AN ALTERNATIVE TO STENCILING THE LABEL.

      ii. **LABELING OPTION:** THE USE OF SIGNS MADE FROM STAINLESS STEEL WITH LASER CUT LETTERING, AFFIXED TO STRUCTURE WITH DOUBLE-SIDED BONDING TAPE IS AUTHORIZED AS AN ALTERNATIVE.

   b. STENCIL USING PAINT OR PERMANENT MARKER THE FOLLOWING INFORMATION, AS SHOWN IN VIEW 34A, USING 1/4" TALL (MIN.) BOLD BLACK LETTERING. THIS LABEL SHALL BE LOCATED ON EACH OF THE PLATFORM QUADRANTS, AS SHOWN IN VIEWS 93B & 94B.

      i. **LABELING OPTION:** THE USE OF BLACK VINYL LETTERING IS AUTHORIZED AS AN ALTERNATIVE TO STENCILING THE LABEL.

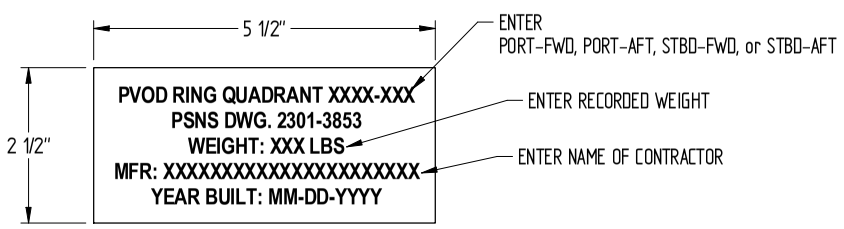


**DETAIL VIEW 95A (93B, 94B)**
LABEL PLATE FOR EACH PVOD RING QUADRANT

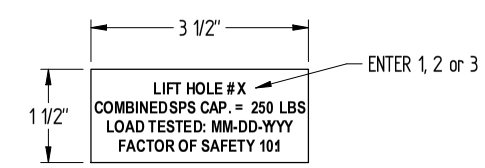


**DETAIL VIEW 92A (93B, 94B)**
LABEL PLATE FOR LIFT BLOCK LOAD TEST DATA

**PUGET SOUND NAVAL SHIPYARD**
**CODE 2370 -- ENGINEERING DIVISION**

Unless otherwise specified, dimensions are in inches.
Decimals:
X.X = ±0.13
X.XX = ±0.025
X.XXX = ±0.003
X.XXXX = ±0.0005
Fractions = ±1/16 < 36"
Fractions = ±1/8 > 36"
Angles = ±0.5°
Drawing dimensional and geometric tolerances per ASME Y14.5M-1994

NO DEVIATIONS SHALL BE MADE WITHOUT CODE 2370 APPROVAL

| DRAWING NO. | FSR | RF # |
|---|---|---|
| 2301-3853 | N/A | N/A |

TITLE: **PVOD BASE RING QUADRANTS**

| SCALE | | REV |
|---|---|---|
| AS SHOWN | Sheet 19 of 19 | Orig |

TITLE: PVOD BASE RING QUADRANTS
REV: Orig
SHEET: 19
DWG. NO.: 2301-3853