NOTES:

1. SCOPE

1.1 THIS DRAWING DESCRIBES THE REQUIREMENTS, QUALITY PROVISIONS AND PREPARATION FOR DELIVERY OF CUSTOM MADE HEAVY LIFT BAG(S).

2. APPLICABLE DOCUMENTS

2.1 THE FOLLOWING DOCUMENTS FORM A PART OF THIS DRAWING TO THE EXTENT SPECIFIED HEREIN, UNLESS OTHERWISE INDICATED. THE ISSUE IN EFFECT ON DATE OF INVITATION FOR BIDS OR REQUEST FOR PROPOSAL SHALL APPLY. THIS LIST REFLECTS THE CURRENT VERSION AT THE LATEST REVISION OF THIS DRAWING.

2.2 GOVERNMENT DOCUMENTS:

SPECIFICATIONS:

MILITARY

MIL-DTL-32072	THREAD, NYLON
MIL-PRF-5038J	TAPE, TEXTILE AND WEBBING, REINFORCING, NYLON
MIL-PRF-20696F	CLOTH, COATED, POLYESTER OR NYLON WATERPROOF
MIL-W-27265E	WEBBING, TEXTILE, WOVEN NYLON IMPREGNATED
MIL-C-7219F	CLOTH, DUCK, NYLON

STANDARDS:

MILITARY

MIL-STD-130N	IDENTIFICATION MARKING OF U.S. MILITARY PROPERTY
(B) NAVSEA T9074-AS-GIB-010/271	REQUIREMENTS FOR NON-DESTRUCTIVE TESTING

2.3 NON-GOVERNMENT DOCUMENTS:

NATIONAL AEROSPACE STANDARDS COMMITTEE (NAS):
(B) ~~AIA/NAS1284 REV 3 BUCKLE - WEB STRAP, LIGHT DUTY~~
AIA/NASM 51929 - BUCKLE, SPRING ACTION

(A) ~~PARACHUTE INDUSTRY ASSOCIATION~~
~~PIA PIA-H-7195 HARDWARE, PARACHUTE, GENERAL SPECIFICATION FOR~~

AMERICAN SOCIETY OF MECHANICAL ENGINEERS
ASME Y14.100-2004 ENGINEERING DRAWING PRACTICES

(B) AMERICAN SOCIETY OF TESTING AND MATERIALS

ASTM D6193-09	STANDARD PRACTICE FOR STITCHES AND SEAMS
ASTM D4020	STANDARD SPECIFICATION FOR ULTRA HIGH MOLECULAR WEIGHT POLYETHYLENE MOLDING AND EXTRUSION MATERIALS
ASTM D4976	STANDARD SPECIFICATION FOR POLYETHYLENE PLASTICS MOLDING AND EXTRUSION MATERIALS

2.4 ORDER OF PRECEDENCE: IN THE EVENT OF A CONFLICT BETWEEN THE DOCUMENTS REFERENCED HEREIN AND THE CONTENTS OF THIS DRAWING, THE CONTENTS OF THIS DRAWING SHALL TAKE PRECEDENCE.

3. REQUIREMENTS:

3.1 PERFORMANCE CHARACTERISTICS:

3.1.1 LOAD CAPACITY: THE ASSEMBLY IS DESIGNED TO HOLD 600 LBS MINIMUM. DESIGN PERFORMANCE IS THE RESPONSIBILITY OF THE PROCURING ACTIVITY.

(B) 3.1.2 PROOF TEST: THE HEAVY LIFT BAG SHALL BE PROOF LOADED TO 6000 LBS AND HELD FOR TEN MINUTES. BEFORE AND AFTER THE PROOF TEST, VISUALLY INSPECT THE HEAVY LIFT BAG FOR DAMAGE. INSPECT FABRIC FOR SNAGS, PUNCTURES, TEARS, HOLES, FRAYED EDGES, CUTS AND LOOSE OR BROKEN STITCHES. INSPECT HOISTING RINGS FOR BREAKS, ELONGATION, CRACKS, DISTORTED OR OVERSTRESSED AREAS, BENDING, AND CORROSION.

3.2 DIMENSIONS AND CONFIGURATIONS: THE DIMENSIONS AND CONFIGURATION SHALL BE IN ACCORDANCE WITH SHEET 2 HEREIN.

3.3 MATERIALS:

3.3.1 CLOTH:

3.3.1.1 EXTERNAL: THE EXTERNAL CLOTH SHALL BE MADE OF COATED CLOTH IN ACCORDANCE WITH MIL-PRF-20696, TYPE II, CLASS 3, COLOR OLIVE DRAB.

3.3.1.2 LINER: THE LINER CLOTH SHALL BE MADE OF DUCK CLOTH IN ACCORDANCE WITH MIL-C-7219, TYPE 1, CLASS 1.

3.3.2 PADDING: THE PADDING SHALL BE MADE OF FIRE RETARDANT SYNTHETIC FELT FIBER PAD WITH A COMPRESSED HEIGHT OF $.10^{+.06}/_{-.00}$
THE PADDING IS AVAILIBLE FROM SACKRER PRODUCTS INC., STATESVILLE, NORTH CAROLINA, AS AN "INSULPACK"

3.3.3 WEBBING:

3.3.3.1 HOISTING, LIFTING LOOP, AND HAND GRIPS: THE HOISTING, LIFTING LOOP AND HAND GRIPS SHALL BE MADE OF 1.75 INCH WIDE WOVEN NYLON WEBBING WITH A MINIMUM TENSILE STRENGTH OF 9500 LBS, PER MIL-W-27265, TYPE X, CLASS L, COLOR OLIVE DRAB.

3.3.3.2 RETAINING STRAPS: THE RETAINING STRAPS SHALL BE MADE OF 1 INCH WIDE WOVEN NYLON WEBBING WITH A MINIMUM TENSILE STRENGTH OF 1000 LBS, COLOR OLIVE DRAB.

3.3.4 TAPE (BINDING): THE BINDING SHALL BE MADE OF NYLON TEXTILE TAPE IN ACCORDANCE WITH MIL-PRF-5038, TYPE III, CLASS 2 OR EQUIVALENT.

(A) (B) 3.3.5 HOISTING RINGS: THE HOISTING RINGS SHALL BE P/N B175 FROM BAINBRIDGE INTERNATIONAL OR EQUIVALENT. RING TO BE 2.38 INCH WIDE WITH A SAFE WORKING LOAD OF 1500 LBS. MATERIAL TO BE STAINLESS STEEL. IF RING IS OF WELDED CONSTRUCTION, THE WELD IS TO BE NON-DESTRUCTIVE TESTED PER NAVSEA T9074-AS-GIB-010/271, REQUIREMENTS FOR NON-DESTRUCTIVE TESTING. TESTING METHOD SHALL BE RT (RADIOGRAPHY).

(B) 3.3.6 BUCKLES: THE BUCKLES SHALL BE IN ACCORDANCE WITH NASM 51929, PART MS51929-2, ZINC COATED, BLACK ENAMEL FINISH, OR EQUIVALENT.

3.3.7 THREAD: THE THREAD SHALL BE POLYESTER THREAD IN ACCORDANCE WITH MIL-DTL-32072, TYPE 1, CLASS A, SIZE FF, COLOR NATURAL, OR EQUIVALENT (TWISTED MULTIPLE CORD, SOFT FINISH, GENERAL PURPOSE, 3 PLY, 17.5 POUND BREAK FORCE).

(B) 3.3.8 BOTTOM PLATE: BOTTOM PLATE, PN 10, SHALL BE ULTRA HIGH MOLECULAR WEIGHT POLYETHYLENE (UHMWPE) PER ASTM D4976 GROUP 2, CLASS 3-W31. IZOD IMPACT TEST RESULT SHALL BE NON-BREAK (NB) PER ASTM D4020. UHMWPE SHALL BE 55 - 70 SHORE D DUROMETER. TENSILE YIELD SHALL BE GREATER THAN 3000 PSI.

3.4 CONSTRUCTION: THE ITEM SHALL BE CONSTRUCTED AS SHOWN ON SHEET 2 USING THE MATERIALS SPECIFIED IN PARAGRAPH 3.3.

3.4.1 SEAMS AND STITCHING: SEAMS AND STITCHING SHALL BE IN ACCORDANCE WITH ASTM D6193. ALL STITCHING SHALL BE TYPE 301, 6-8 STITCHES PER INCH. BACKSTITCH ALL ENDS OF STITCHING ONE INCH MINIMUM. ALL BINDING SHALL BE TYPE BSD-2.

3.4.2 WEBBING: ALL HOISTING, LIFTING LOOP, HAND GRIP, AND RETAINING STRAP WEBBING SHALL BE ATTACHED TO THE ITEM AS SHOWN ON SHEET 2, USING REINFORCED STITCHING. MATERIALS AS DEFINED IN PARAGRAPHS 3.3.1, 3.3.3, AND 3.3.4.

3.4.3 PADDING: THE PADDING, PARAGRAPH 3.3.2, SHALL FILL THE ENTIRE AREA BETWEEN THE EXTERNAL AND THE LINER CLOTHS, EXCEPT FOR THE EDGES USED FOR BINDING, PARAGRAPH 3.3.1.

3.4.4 LIFTING LOOPS: LIFTING LOOPS SHALL BE ASSEMBLED TO THE HOISTING STRAP, FOUR PLACES TOTAL, AS SHOWN ON SHEET 2, AND LOOPED TO ALLOW A POLE OF 2.00 INCHES IN DIAMETER TO BE INSERTED THROUGH TWO LOOPS ON EACH SIDE OF THE EQUIPMENT BAG, USING REINFORCED STITCHING.

3.4.5 HAND GRIPS: HAND GRIPS SHALL BE ASSEMBLED, TWO PLACES TOTAL, AND TAPER SEWN USING REINFORCED STITCHING, TO PROVIDE A SECURE AND GOOD HAND GRIP.

3.4.6 HOISTING RINGS: ONE HOISTING RING SHALL BE MOUNTED ON EACH END OF THE HOISTING WEBBING, SIX PLACES TOTAL, AS SHOWN ON SHEET 2, USING A DOUBLE LAYER OF THE WEBBING STRAP AND DOUBLE REINFORCED STITCHING.

3.4.7 BUCKLES: ONE BUCKLE SHALL BE MOUNTED ON EACH END, USING A DOUBLE LAYER OF THE WEBBING STRAP AND REINFORCED STITCHING. POSITION AS SHOWN ON SHEET 2.

(B) 3.5 IDENTIFICATION AND MARKING: ONE SIDE OF THE HEAVY LIFT BAG SHALL BE PERMANENTLY MARKED IN ACCORDANCE WITH MIL-STD-130 WITH 1/2 INCH HIGH CHARACTERS WITH THE DRAWING NUMBER IN ACCORDANCE WITH PARAGRAPH 6.4, PROCEDED BY THE SOURCE CONTROL NOTATION SOCN (E.G. SOCN8423904), THE VENDOR NAME, THE STATIC TEST LOAD (E.G. STATIC TEST LOAD: 1200 LBS), THE WORKING LOAD (E.G. WORKING LOAD: 600 LBS), AND THE TEST DATE (E.G. TEST DATE: -/-/-).

3.6 WORKMANSHIP: THE ITEM SHALL BE MANUFACTURED IN SUCH A MANNER AS TO BE UNIFORM IN QUALITY AND DURABILITY AND SHALL BE FREE FROM DEFECTS THAT WILL AFFECT LIFE, PERFORMANCE, OR SERVICEABILITY.

3.7 QUALIFICATION: WHEN SPECIFIED IN THE PROCURING ACTIVITY'S PURCHASE ORDER, A CERTIFICATE OF COMPLIANCE SHALL BE REQUIRED FROM A VENDOR IN ORDER TO BE LISTED AS AN APPROVED SOURCE OF SUPPLY IN 6.4 HEREIN. THE CERTIFICATE OF COMPLIANCE SUBMITTED TO THE PROCURING ACTIVITY SHALL STATE THAT THE VENDOR'S PRODUCT MEETS ALL REQUIREMENTS.

3.8 QUALITY CONFORMANCE: WHEN SPECIFIED IN THE PROCURING ACTIVITY'S PURCHASE ORDER, A CERTIFICATE OF CONFORMANCE TO THE INSPECTION CRITERIA OF 4.3 HEREIN SHALL BE PROVIDED WITH EACH LOT DELIVERED TO THIS DRAWING.

3.9 NOTIFICATION OF CHANGE: THE VENDOR SHALL NOTIFY THE PROCURING ACTIVITY, IN WRITING, OF ANY CHANGE TO THE HEAVY LIFT BAG WHICH MAY AFFECT COMPLIANCE TO THE REQUIREMENTS SPECIFIED HEREIN.

4. QUALITY ASSURANCE PROVISIONS:

4.1 RESPONSABILITY FOR INSPECTION: UNLESS OTHERWISE SPECIFIED THE VENDOR IS RESPONSIBLE FOR THE PERFORMANCE OF ALL INSPECTION REQUIREMENTS AS SPECIFIED HEREIN. THE PROCURING ACTIVITY RESERVES THE RIGHT TO PERFORM ANY OF THE INSPECTIONS SPECIFIED HEREIN TO ENSURE THAT THE ITEMS MEET THE REQUIREMENTS OF THE DRAWING.

(B) 4.2 QUALIFICATION PROVISIONS: QUALIFICATION INSPECTION SHALL NOT BE REQUIRED UNLESS QUALIFYING A FIRST ARTICLE COMPONENT FORM AN UNAPPROVED SOURCE OF SUPPLY OR OTHERWISE SPECIFIED IN THE PURCHASE ORDER. THE VENDOR SHALL SUPPLY A CERTIFICATE OF COMPLIANCE IN ACCORDANCE WITH 3.7 HEREIN.

4.3 QUALITY CONFORMANCE INSPECTION: QUALITY CONFORMANCE INSPECTION SHALL BE IN ACCORDANCE WITH THE VENDOR'S DOCUMENTED ACCEPTANCE TEST PROCEDURES WHICH SHALL INCLUDE BUT NOT NECESSARILY BE LIMITED TO ASSURANCE THAT THE FOLLOWING REQUIREMENTS ARE MET:

A. PROOF TEST (3.1.2)
B. DIMENSIONS AND CONFIGURATION (3.2)
C. MATERIALS (3.3)
D. CONSTRUCTION (3.4)
E. INDENTIFICATION AND MARKING (3.5)
F. WORKMANSHIP (3.6)

5. PREPARATION FOR DELIVERY:

5.1 PACKING AND PACKAGING REQUIREMENTS: ALL ITEMS SHALL BE PACKED AND PACKAGED, USING GOOD COMERCIAL PRACTICES, TO ENSURE THAT ITEMS WILL ARRIVE AT THE DESTINATION WITHOUT DAMAGE.

6. PROCUREMENT NOTES:

6.1 INTENDED USE: THIS HEAVY LIFT BAG IS INTENDED TO PROVIDE TRANSFER OF GENERAL PURPOSE EQUIPMENT.

(B) 6.2 FIRST ARTICLE: WHEN SPECIFIED, A SAMPLE SHALL BE SUBJECTED TO FIRST ARTICLE INSPECTION BY THE PROCURING ACTIVITY.

6.2.1 WHEN A FIRST ARTICLE INSPECTION IS REQUIRED, THE ITEM SHALL BE A FIRST ARTICLE SAMPLE. THE FIRST ARTICLE SHALL CONSIST OF ONE UNIT THAT THE PROCURING ACTIVITY SHALL INSPECT IN ACCORDANCE WITH 6.2.2 AND PROVIDE APPROVAL OF FIRST ARTICLE TEST RESULTS OR DISPOSITION OF FIRST ARTICLES.

6.2.2 FIRST ARTICLES COMPONENTS AND MATERIALS SHALL BE INSPECTED IN ACCORDANCE WITH ALL THE REQUIREMENTS HEREIN AND OF REFERENCED DOCUMENTS UNLESS OTHERWISE EXCLUDED, AMENDED, MODIFIED, OR QUALIFIED IN THE SPECIFICATION OR APPLICABLE PURCHASE DOCUMENTS. VENDOR SHALL SUPPLY CERTIFICATION DOCUMENTING THE QUALITY CONFORMANCE OF THE FIRST ARTICLE SAMPLE IN ACCORDANCE WITH 4.3, B, C, D, AND F.

(B) 6.2.3 FIRST ARTICLE SHALL BE PROOF TESTED BY PROCURING ACTIVITY PER PARA 3.1.2. THE PROCURING ACTIVITY SHALL PROVIDE RESULTS OF ALL QUALITY CONFORMANCE INSPECTIONS IAW 4.3 TO NUWCDIVNPT, CODE 4122, FOR INCLUSION INTO APPROVED SOURCE(S) OF SUPPLY, 6.4. FORWARDING DOCUMENTATION SHALL INCLUDE:

A. VENDOR CERTIFICATE OF COMPLIANCE (3.7).
B. RESULTS OF NDT, IF REQUIRED BY 3.3.5.
C. TEST PROCEDURE USED TO ACCOMPLISH 4.3.A.
D. RESULTS OF PRE AND POST PROOF TEST INSPECTIONS.
E. COMPLETED WEIGHT TEST RECORD FORM (COMSUBFOR FORM 8500/7).

6.3 ONLY THE ITEM(S) DESCRIBED IN THIS DRAWING WHEN PRODUCED FROM THE VENDOR(S) LISTED IN PARA 6.4 ARE APPROVED BY THE PROCURING ACTIVITY FOR USE IN THE APPLICATION(S) SPECIFIED HEREIN. A SUBSTITUTE ITEM(S) SHALL NOT BE USED WITHOUT PRIOR APPROVAL BY THE PROCURING ACTIVITY.

6.4 APPROVED SOURCES OF SUPPLY: APPROVED SOURCES OF SUPPLY ARE LISTED BELOW. ADDITIONAL SOURCES WILL BE ADDED AS THEY BECOME AVAILABLE.

APPROVED SOURCE(S) OF SUPPLY

PART NUMBER	VENDOR CAGE NUMBER	VENDOR PART NUMBER	VENDOR NAME AND ADDRESS
8423904	-	N/A	PJ's CANVAS 1890 PUEBLO AVE NAPA, CA 94558 707-258-2903

7. GENERAL NOTES PERTAINING TO USE:

7.1 SHARP CORNERS: ALL SHARP CORNERS ON EQUIPMENT PLACED IN THE BAG MUST BE COVERED OR PADDED IN SUCH A WAY TO PREVENT POSSIBLE TEARING OF THE BAG LINER.

7.2 REMOVAL FROM SERVICE: BEFORE EACH USE, THE BAG IS TO BE VISUALLY INSPECTED FOR ANY DAMAGE, AS SPECIFIED IN PARA 3.1.2. IF ANY DAMGE IS FOUND, THE BAG IS TO REMOVED FROM SERVICE. IF ANY DAMAGE IS DONE TO THE BAG DURING USE, THE BAG IS TO BE REMOVED FROM SERVICE.

REVISIONS

REV	DESCRIPTION	DATE	APPROVED
-	INITIAL RELEASE	10-01-09	M. DEMETRI
A	ADDED NEW D-RINGS: UPDATED PARTS LIST. UPDATED NOTE 3.3.5. UPDATED NOTE, ZONE 2-3D. ADDED SOURCE OF SUPPLY - PJ's CANVAS. REMOVED OLD RING SPECIFICATION FROM LISTING.	6-9-10	B. SJOBLOM
B	NOTE 2.2 - ADDED NDT SPEC; NOTE 2.3 - REMOVED PIA SPEC AND ADDED TWO ASTM SPECS, CHANGED BUCKLE SPEC; NOTE 3.1.2 - CHANGED PROOF TEST FROM 1200 LBS TO 6000 LBS. ADDED REQUIREMENT FOR PRE INSPECTION; NOTE 3.3.5 - ADDED NDT REQUIREMENT; NOTE 3.3.6 - UPDATED NOTE FOR NEW BUCKLE; NOTE 3.3.8 - ADDED BOTTOM PLATE NOTE; NOTE 3.5 - CHANGED PROOF TEST MARKING TO STATIC TEST LOAD; NOTE 4.3 - UPDATED NOTE FOR FIRST ARTICLE QUALIFICATION.; NOTE 6.2 - CHANGED NUWC TO PROCURING ACTIVITY.; NOTE 6.2.3 - UPDATED NOTE FOR NUWC REQUIRED DOCUMENTATION; UPDATED SPECIFICATION, PN 8; ADDED PN 10; UPDATED BUCKLE CALL-OUT, SHEET 2; ADDED SHEET 4; UPDATED SHEET NUMBERS		BROADMEADOW.JAMES.T.1228613742

THIS DRAWING HAS BEEN GENERATED AND IS MAINTAINED BY A CAD SYSTEM. CHANGES SHALL ONLY BE INCORPORATED AS DIRECTED BY CODE 412, NUWCDIVNPT.

MATERIAL LIST

FIND	QTY	DESCRIPTION	SPECIFICATION
10	1	BOTTOM PLATE	UHMWPE, NOTE 3.3.8
9	AR	THREAD, POLYESTER	MIL-DTL-32072, TY 1, CL A, SIZE FF, NOTE 3.3.7
8	10	BUCKLE	MS 51929-2, NOTE 3.3.6
7	6	HOIST RING	P/N B175, NOTE 3.3.5
6	AR	TAPE, BINDING	MIL-PRF-5038, TY III, CL 2, NOTE 3.3.4
5	AR	WEBBING, 1.0 WIDE	NOTE 3.3.3.2
4	AR	WEBBING, 1.75 WIDE	MIL-W-27265, TY X, CL L, NOTE 3.3.3.1
3	AR	PADDING	NOTE 3.3.2
2	AR	CLOTH, DUCK	MIL-C-7219, TY 1, CL 1, NOTE 3.3.1.2
1	AR	CLOTH, COATED	MIL-PRF-20696, TY 2, CL 3, NOTE 3.3.1.1

UNLESS OTHERWISE SPECIFIED DIMENSIONS ARE IN INCHES
TOLERANCES

FRACTIONS	ANGLES	2 PLACE	3 PLACE
± -	± -	± .25	± -

DO NOT SCALE THIS DRAWING
INTERPRET DIM AND TOL PER ASME Y14.5M-1994
DRAWING MEETS ASME Y14.100
MATERIAL: SEE NOTES

NAVAL UNDERSEA WARFARE CENTER DIVISION, NEWPORT
NEWPORT, RHODE ISLAND 02841-1708
CAGE CODE 50225

PRG MGR	B. SJOBLOM	10-01-09
ENGINEER	B. ALDRICH	10-01-09
CHECKED	W. CUDZILO	10-01-09
DRAWN	B. DUARTE	10-01-09

APPROVED FOR NSSC
M. DEMETRI 10-01-09

DEPARTMENT OF THE NAVY
NAVAL SEA SYSTEMS COMMAND
WASHINGTON, D.C. 20362

HEAVY LIFT BAG

SIZE D | CAGE CODE 53711 | DWG NO. 8423904 | REV B
SCALE -/- | SHEET 1 OF 4

REVISION STATUS OF SHEETS

REVISION	B	B	-	B
SHEET	1	2	3	4

FILENAME: 8423904.slddrw
PLOT DATE: 2/25/2013

DWG NO. 8423904 SH 1

DISTRIBUTION STATEMENT A: APPROVED FOR PUBLIC RELEASE; DISTRIBUTION UNLIMITED

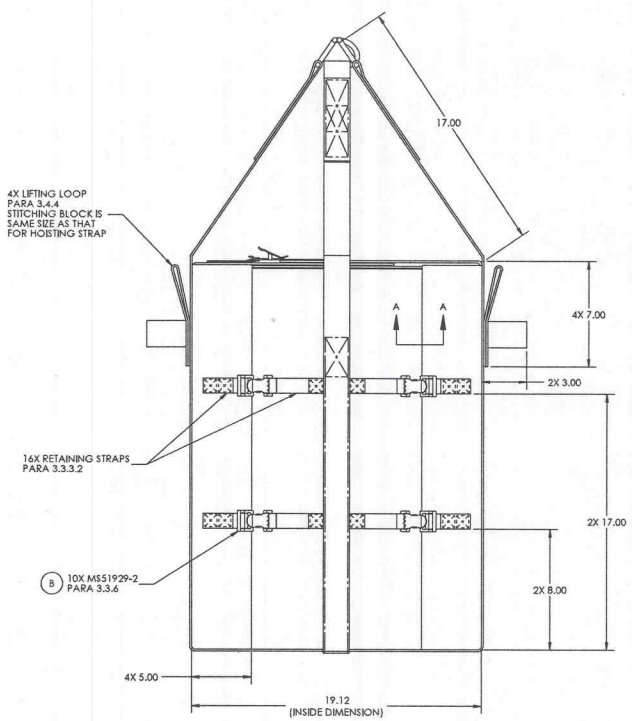

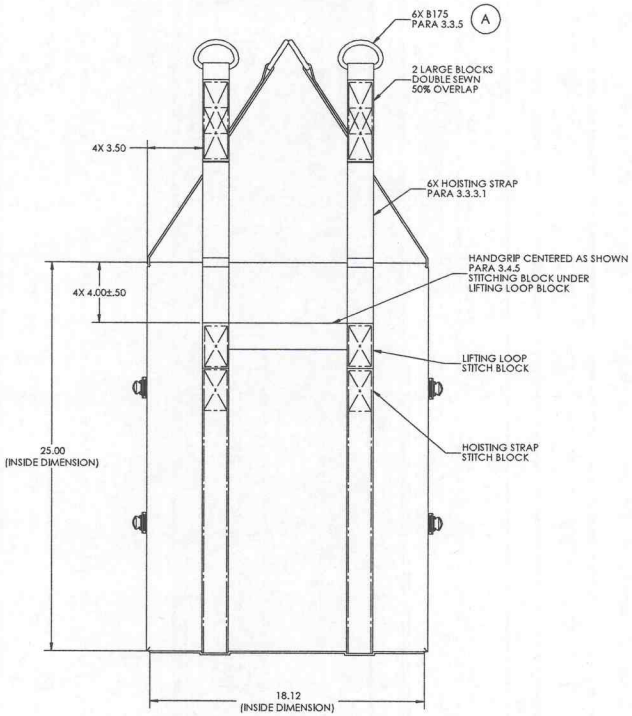

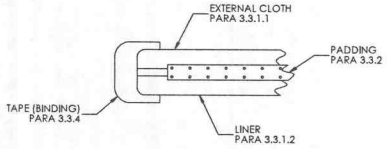

SECTION A-A

ROTATED 90° CCW

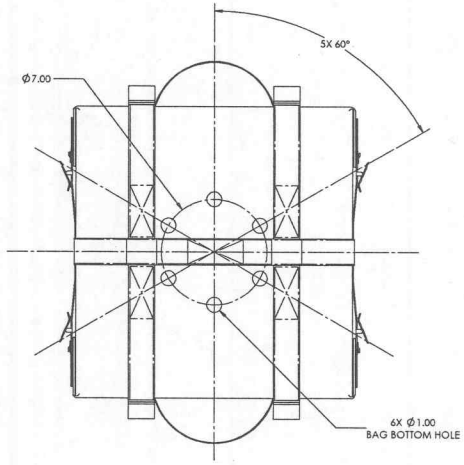

HEAVY LIFT BAG ASSEMBLY

NAVAL UNDERSEA WARFARE CENTER DIVISION, NEWPORT NEWPORT, RHODE ISLAND 02841-1708 CAGE CODE 50225	SIZE D	CAGE CODE 53711	DWG NO. 8423904	REV A
	SCALE -			SHEET 2 of 4
FILENAME: 8423904.slddrw				PLOT DATE: 2/25/2013

DWG NO. 8423904 SH 2

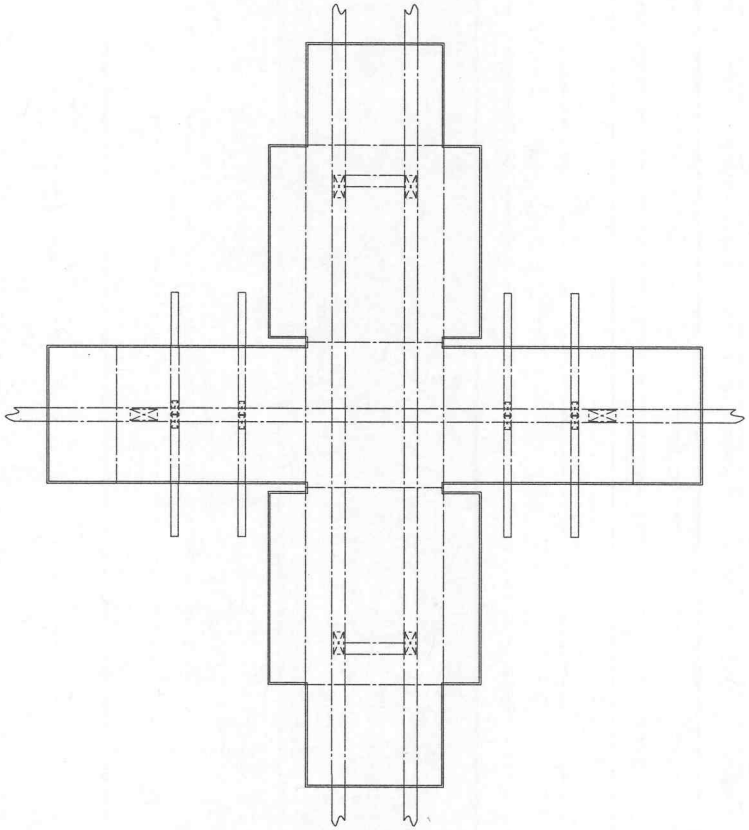

FLAT PATTERN
REFERENCE ONLY

NOTE: NOT ALL DETAILS SHOWN

NAVAL UNDERSEA WARFARE CENTER DIVISION, NEWPORT NEWPORT, RHODE ISLAND 02841-1708 CAGE CODE 50225	SIZE D	CAGE CODE 53711	DWG NO. 8423904	REV -
	SCALE -			SHEET 3 of 4
FILENAME: 8423904.slddrw				PLOT DATE: 2/25/2013

DWG NO 8423904 SH 3

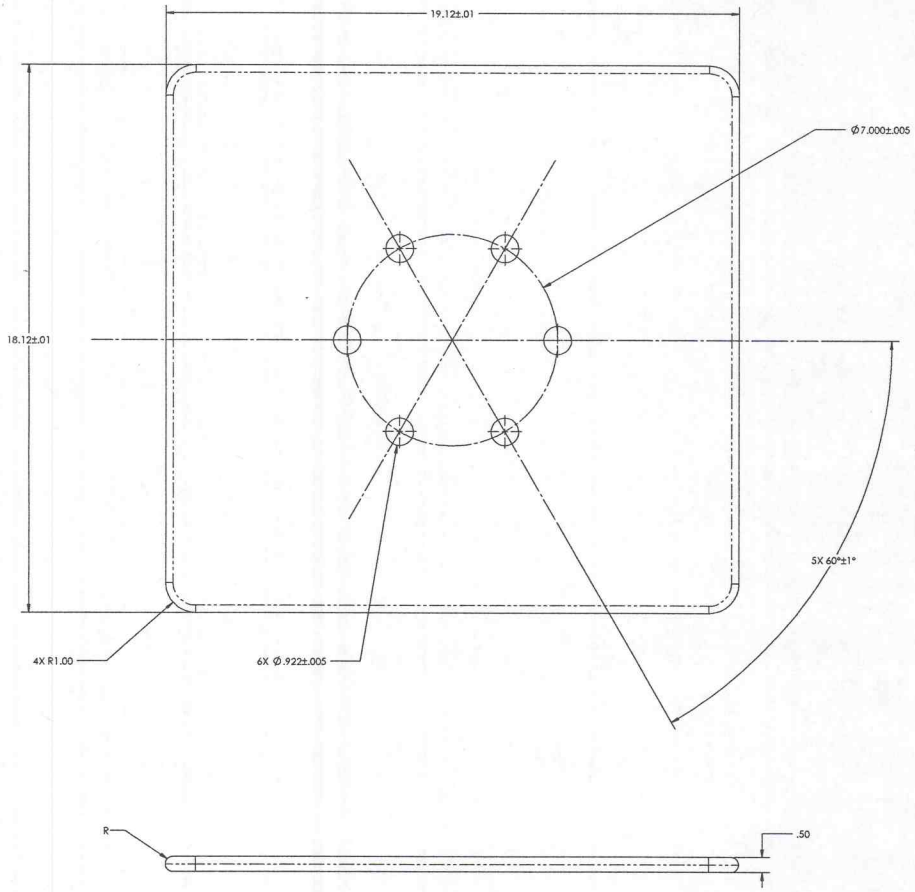

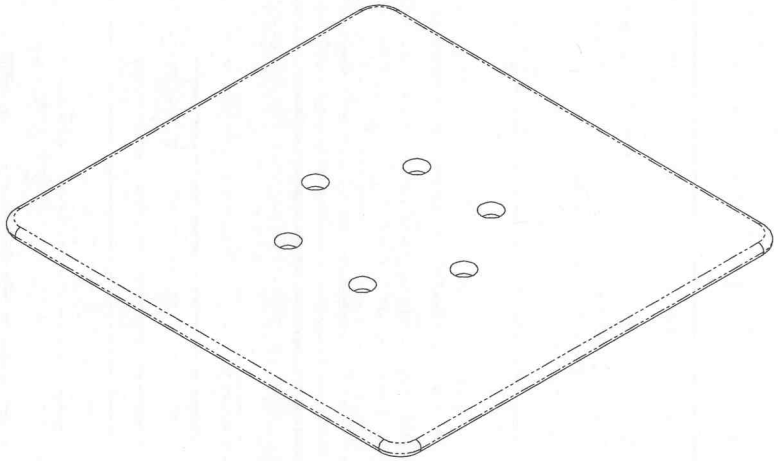

10 BOTTOM PLATE B

NAVAL UNDERSEA WARFARE CENTER DIVISION, NEWPORT NEWPORT, RHODE ISLAND 02841-1708 CAGE CODE 50225	SIZE D	CAGE CODE 53711	DWG NO. 8423904	REV B
	SCALE 1/2		SHEET 4 of 4	
FILENAME: 8423904.slddrw			PLOT DATE: 2/25/2013	

DWG NO 8423904 SH 4