SUGGESTED SOURCE(S) OF SUPPLY				DIM F	DIM G	DIM H	DIM J	DIM K	UNIT WT.
CONTROL NUMBER	SUPPLIER DATA								
	CAGE NO.	PART NO.	NAME AND ADDRESS						
497A10041-1	96780	BRC 5457-20	BURKE INDUSTRIES 2250 SOUTH TENTH STREET SAN JOSE, CA 95112-4197	7.14	12.00	26.28	5.00	10.00	26.79 LBS.
497A10041-2	96780	BRC 5457-21	BURKE INDUSTRIES 2250 SOUTH TENTH STREET SAN JOSE, CA 95112-4197	5.14	6.00	16.28	5.00	10.00	16.58 LBS.
497A10041-3	96780	BRC 5457-22	BURKE INDUSTRIES 2250 SOUTH TENTH STREET SAN JOSE, CA 95112-4197	4.35	6.00	14.70	2.75	5.50	8.55 LBS.
497A10041-4	96780	BRC 5457-23	BURKE INDUSTRIES 2250 SOUTH TENTH STREET SAN JOSE, CA 95112-4197	3.28	-	6.55	2.75	5.50	3.83 LBS.
497A10041-5	96780	BRC 5457-24	BURKE INDUSTRIES 2250 SOUTH TENTH STREET SAN JOSE, CA 95112-4197	5.91	12.00	23.82	6.30	12.60	31.58 LBS.

REVISIONS				
ZONE	REV	DESCRIPTIONS	DATE	APPROVED
	D	INC NOR D/10. W.KRAFT	12/17/93	W.KRAFT

NOTES:

1. INK STAMP OR STENCIL THE FOLLOWING WITH .10-.20 HIGH CHARACTERS IAW MIL-STD-130: "96780-BRC5457-(AND APPLICABLE DASH NO.) 38597ASSY497A10041-(AND APPLICABLE DASH NO.)"
2. REMOVE BURRS AND BREAK SHARP EDGES.
3. BOND FN 1, 3 AND 4 TO FN 2 AND 5 USING ADHESIVE IAW (38597) SCD NO. 497A80069.
4. TILE SHALL MEET ALL REQUIREMENTS OF MIL-A-24485, TYPE II WITH EXCEPTION OF DIMENSIONS AND MATERIAL FOR FN 1, 3 AND 4.
5. SUPPLIER IS ADVISED THAT IF THE MATERIAL FORMULATION OR FABRICATION PROCESS HAS BEEN CHANGED AFTER THE RECEIPT OF FIRST ARTICLE, SAMPLES SHALL BE SUBMITTED TO PROCURING ACTIVITY FOR REAPPROVAL BEFORE SUPPLYING PRODUCT.
6. DELETED.
7. DELETED.
8. IDENTIFICATION OF THE "SUGGESTED SOURCE(S) OF SUPPLY" HEREON IS NOT TO BE CONSTRUED AS A GUARANTEE OF PRESENT OR CONTINUED AVAILABILITY AS A SOURCE OF SUPPLY FOR THE ITEM(S).
9. EDGE DISBOND BETWEEN FIND NO. 5 AND FIND NO. 4 CAN BE REPAIRED USING ADHESIVE MMM-A-1617.

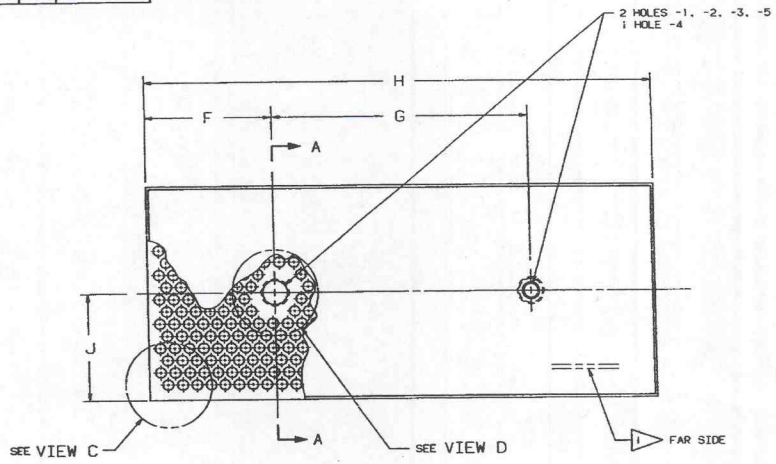

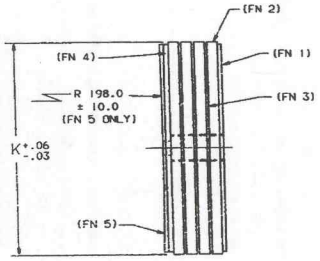

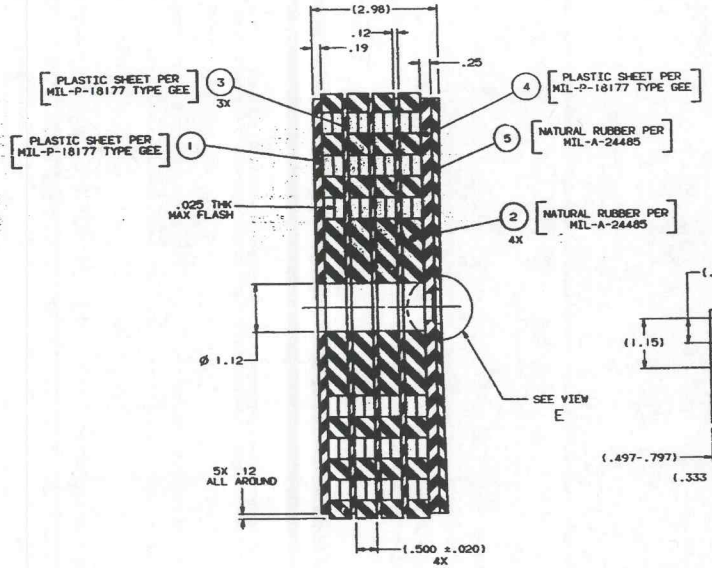

SECTION A-A
SCALE: 1/1

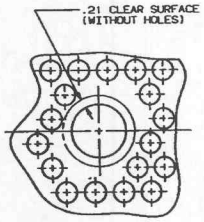

VIEW D
SCALE: 1/1

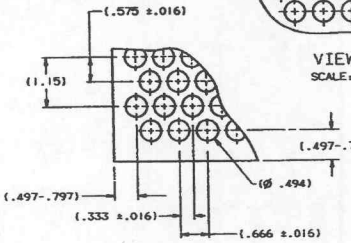

VIEW C
SCALE: 1/1

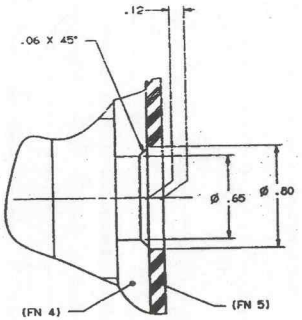

VIEW E
SCALE: 3/1

INTERPRET DWG IAW DOD-STD-100C

DIMENSIONING AND TOLERANCING IAW ANSI Y14.5M-1982

SPECIFICATION CONTROL DRAWING

SSN-21	497A75000
SSN-21	497A73000
SSN-21	497A71000
SSN-688	497A65000
SSN-688	497A63000
SSN-688	497A61000
USED ON	NEXT ASSY

UNLESS OTHERWISE SPECIFIED DIMENSIONS ARE IN INCHES AND ARE AFTER PLATING TOLERANCES ON:

FRACTIONS	DECIMALS .X	DECIMALS .XX	DECIMALS .XXX	ANGLES
--	--	±.03	±.010	±.5°

THIS IS A COMPUTER GENERATED DOCUMENT. CHANGES SHOULD BE MADE BY COMPUTER INPUT. SYSTEM USED: CADAM

CONTRACT NO. N00024-88-C-6150	ISSUE DATE 6-16-89
DRAWN BY M.WAGNER	MANUF. ENG. J.DILEONARDI
CHECKER L.BENNETT	QUALITY R.BUNTING
STRESS Y.CHANG	WEIGHTS D.LITTERINE
MATERIALS A.OHLIGER	GROUP ENGINEER B.WARD
PROGRAM APPROVAL E.BLAKE	THIRD ANGLE PROJECTION
CUSTOMER APPROVAL	

NAVAL AIR WARFARE CENTER
AIRCRAFT DIVISION
NAS CHESAPEAKE PARK PLAZA
BALTIMORE, MARYLAND 21220

TILE, ACOUSTIC

SIZE	CAGE CODE	DWG NO.	REV
E	38597	497A10041	D
SCALE 1/2	WEIGHT SEE TAB	SHEET 1 OF 1	

497A10041-1-D

SUGGESTED SOURCE(S) OF SUPPLY				DIM F	DIM G	DIM H	DIM J	DIM K	UNIT WT.
CONTROL NUMBER	SUPPLIER DATA								
	CAGE NO.	PART NO.	NAME AND ADDRESS						
497A10041-1	96780	BRC 5457-20	BURKE INDUSTRIES 2250 SOUTH TENTH STREET SAN JOSE, CA 95112-4197	7.14	12.00	26.28	5.00	10.00	26.79 LBS.
497A10041-2	96780	BRC 5457-21	BURKE INDUSTRIES 2250 SOUTH TENTH STREET SAN JOSE, CA 95112-4197	5.14	6.00	16.28	5.00	10.00	16.58 LBS.
497A10041-3	96780	BRC 5457-22	BURKE INDUSTRIES 2250 SOUTH TENTH STREET SAN JOSE, CA 95112-4197	4.35	6.00	14.70	2.75	5.50	8.55 LBS.
497A10041-4	96780	BRC 5457-23	BURKE INDUSTRIES 2250 SOUTH TENTH STREET SAN JOSE, CA 95112-4197	3.28	-	6.55	2.75	5.50	3.83 LBS.
497A10041-5	96780	BRC 5457-24	BURKE INDUSTRIES 2250 SOUTH TENTH STREET SAN JOSE, CA 95112-4197	5.91	12.00	23.82	6.30	12.60	31.58 LBS.

REVISIONS				
ZONE	REV	DESCRIPTIONS	DATE	APPROVED
	D	INC NOR D/10. W.KRAFT	12/17/93	W.KRAFT

NOTES:

1. INK STAMP OR STENCIL THE FOLLOWING WITH .10-.20 HIGH CHARACTERS IAW MIL-STD-130: "96780-BRC5457-(AND APPLICABLE DASH NO.) 38597ASSY497A10041-(AND APPLICABLE DASH NO.)"
2. REMOVE BURRS AND BREAK SHARP EDGES.
3. BOND FN 1, 3 AND 4 TO FN 2 AND 5 USING ADHESIVE IAW (38597) SCD NO. 497A80069.
4. TILE SHALL MEET ALL REQUIREMENTS OF MIL-A-24485, TYPE II WITH EXCEPTION OF DIMENSIONS AND MATERIAL FOR FN 1, 3 AND 4.
5. SUPPLIER IS ADVISED THAT IF THE MATERIAL FORMULATION OR FABRICATION PROCESS HAS BEEN CHANGED AFTER THE RECEIPT OF FIRST ARTICLE, SAMPLES SHALL BE SUBMITTED TO PROCURING ACTIVITY FOR REAPPROVAL BEFORE SUPPLYING PRODUCT.
6. DELETED.
7. DELETED.
8. IDENTIFICATION OF THE "SUGGESTED SOURCE(S) OF SUPPLY" HEREON IS NOT TO BE CONSTRUED AS A GUARANTEE OF PRESENT OR CONTINUED AVAILABILITY AS A SOURCE OF SUPPLY FOR THE ITEM(S).
9. EDGE DISBOND BETWEEN FIND NO. 5 AND FIND NO. 4 CAN BE REPAIRED USING ADHESIVE MMM-A-1617.

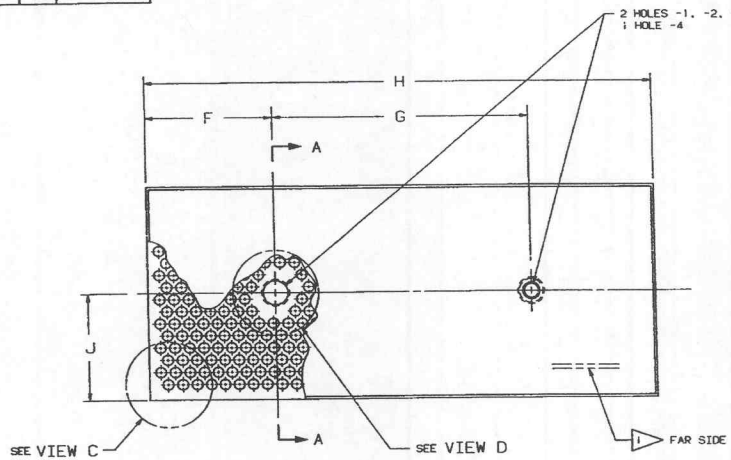

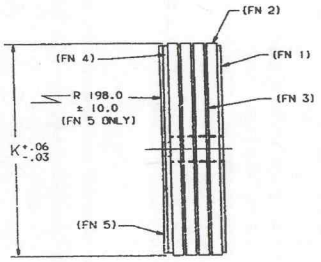

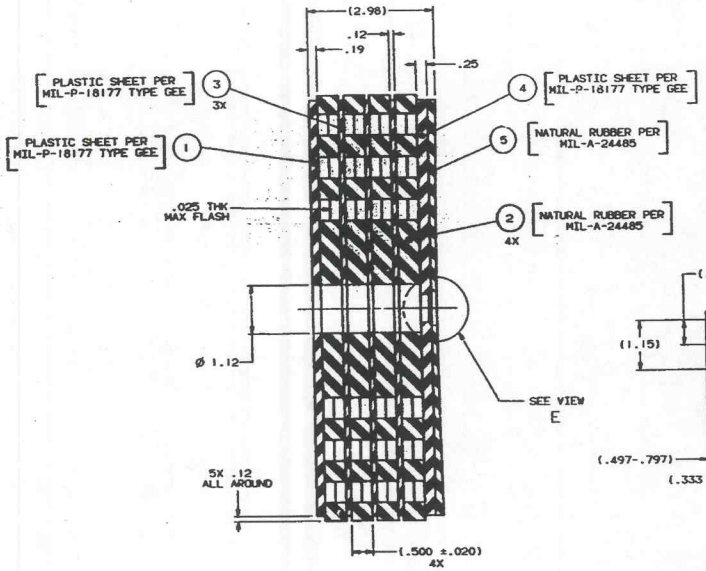

SECTION A-A
SCALE: 1/1

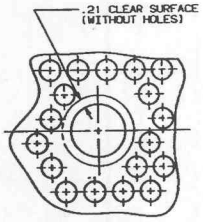

VIEW D
SCALE: 1/1

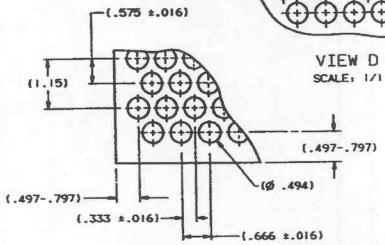

VIEW C
SCALE: 1/1

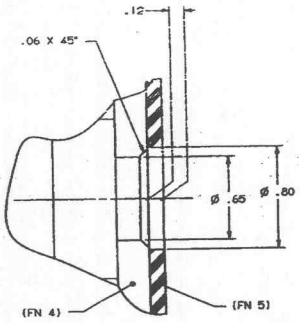

VIEW E
SCALE: 3/1

INTERPRET DWG IAW DOD-STD-100C

DIMENSIONING AND TOLERANCING IAW ANSI Y14.5M-1982

SPECIFICATION CONTROL DRAWING

SSN-21	497A75000
SSN-21	497A73000
SSN-21	497A71000
SSN-688	497A65000
SSN-688	497A63000
SSN-688	497A61000
USED ON	NEXT ASSY

UNLESS OTHERWISE SPECIFIED DIMENSIONS ARE IN INCHES AND ARE AFTER PLATING TOLERANCES ON.

FRACTIONS	DECIMALS .X	DECIMALS .XX	DECIMALS .XXX	ANGLES
--	--	±.03	±.010	±.5°

THIS IS A COMPUTER GENERATED DOCUMENT. CHANGES SHOULD BE MADE BY COMPUTER INPUT. SYSTEM USED: CADAM

CONTRACT NO.	N00024-88-C-6150
DRAWN BY	M.WAGNER
CHECKER	L.BENNETT
STRESS	Y.CHANG
MATERIALS	A.DHLIGER
PROGRAM APPROVAL	E.BLAKE
CUSTOMER APPROVAL	
ISSUE DATE	6-16-89
MANUF. ENG.	J.DILEONARDI
QUALITY	R.BUNTING
WEIGHTS	D.LITTERIDGE
GROUP ENGINEER	B.WARD

THIRD ANGLE PROJECTION

[redacted]

ARMS & MISSL SYSTEMS
100 CHESAPEAKE PARK PLAZA
BALTIMORE, MARYLAND 21220

TILE, ACOUSTIC

SIZE	CAGE CODE	DWG NO.	REV
E	38597	497A10041	D

SCALE	WEIGHT	SHEET
1/2	SEE TAB	1 OF 1

497A10041 F.1.D