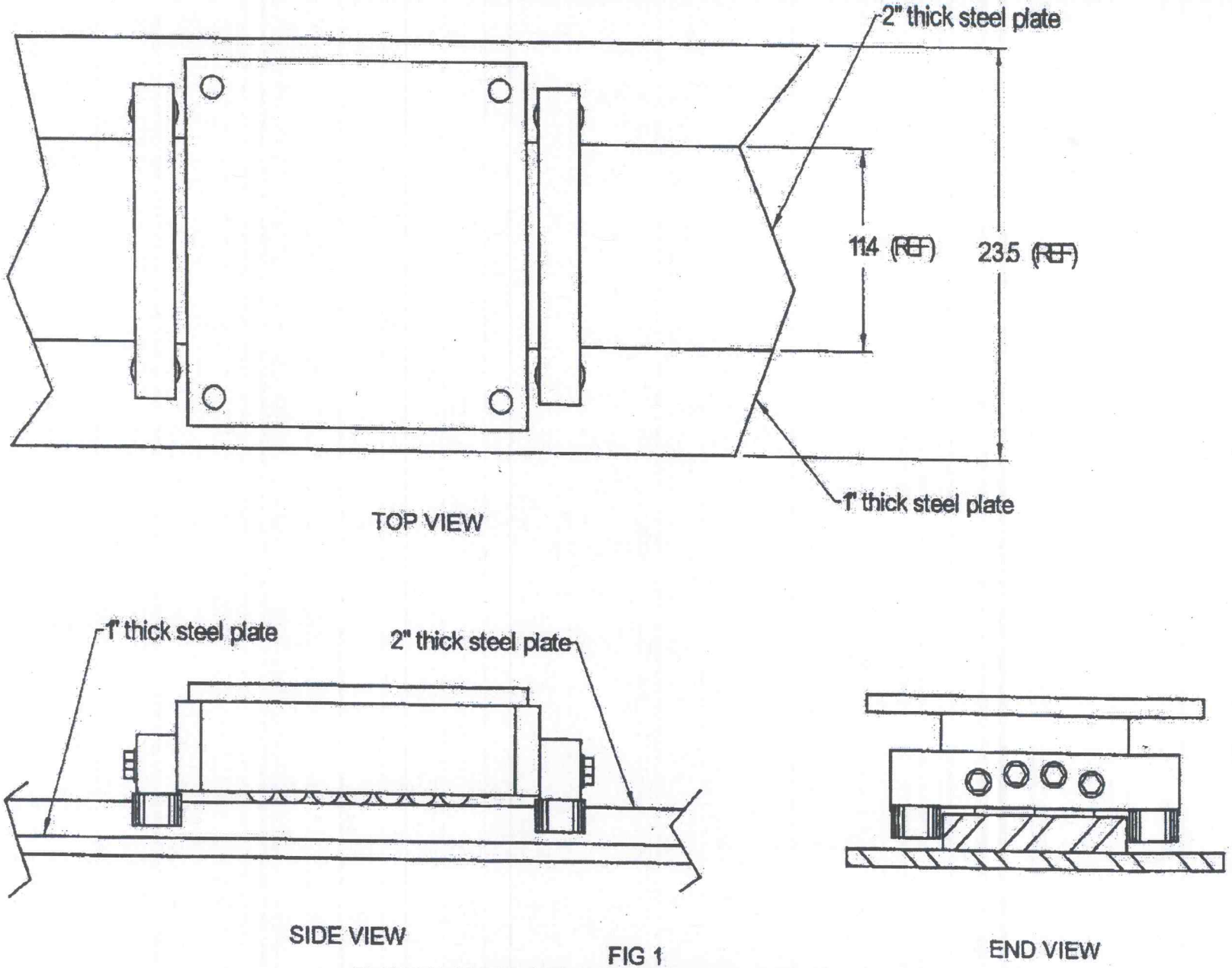


FIG 1
TYPICAL SHIPYARD USE ON STEEL PLATE "TRACK"
(for information only)

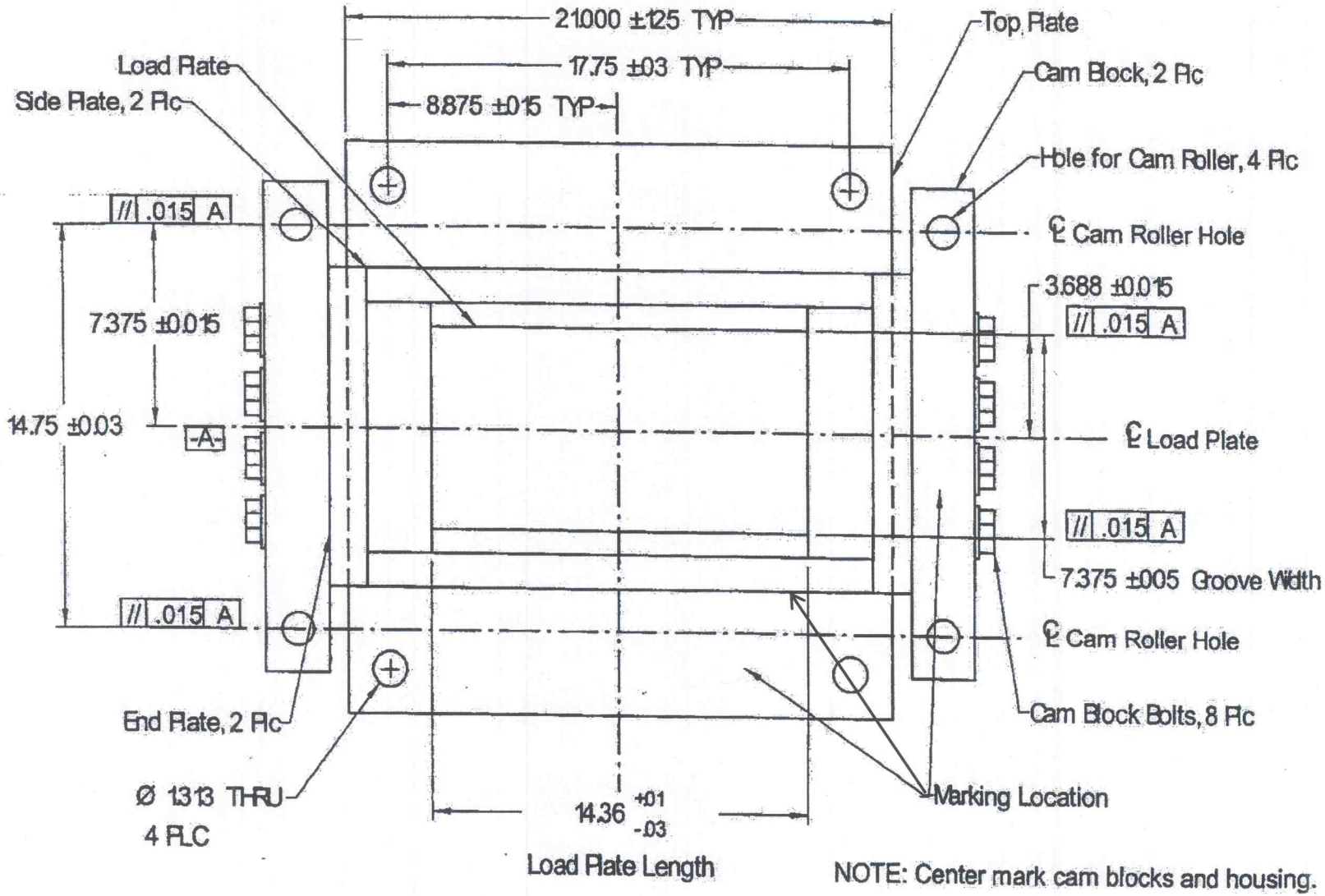


NOTE: roller grove and cams must be parallel and equally spaced about roller centerline.

FIG. 2
UNDERSIDE OF HOUSING WITH CAM BLOCKS
(cam rollers not shown)

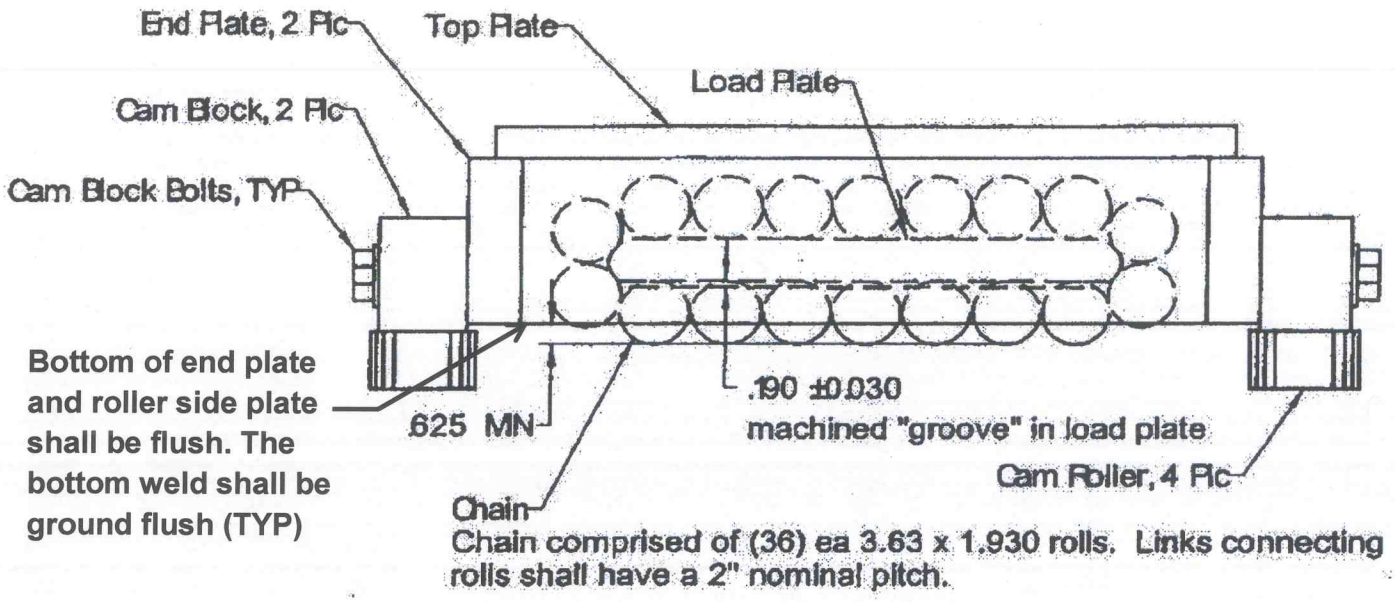


FIG. 3
SIDE ELEV. ROLLER ASSEMBLY

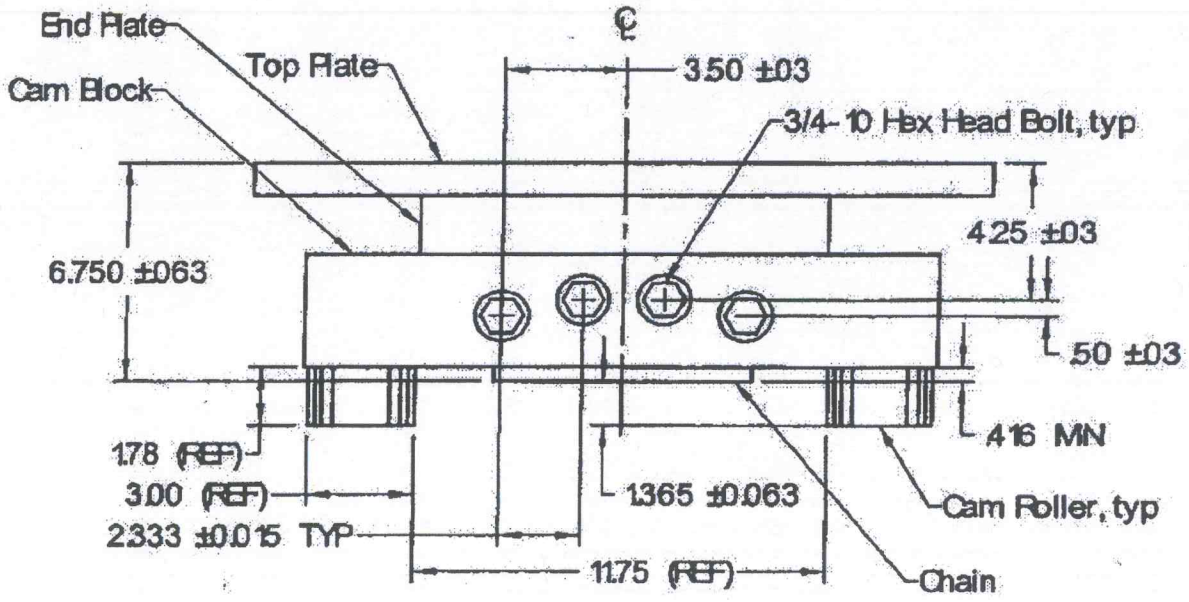


FIG. 4
END ELEV ROLLER ASSEMBLY