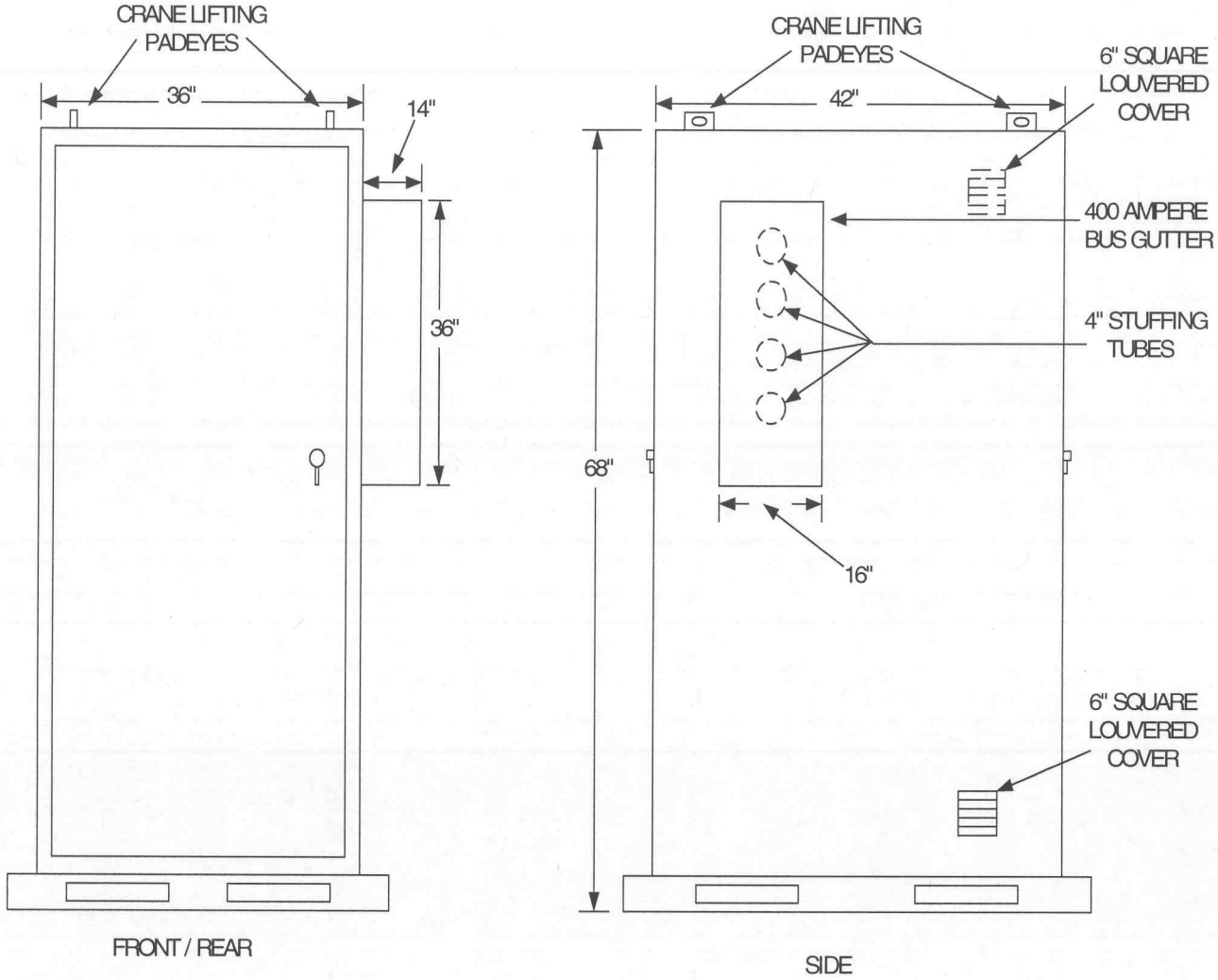

FIGURE 1, 2000 AMP
PORTABLE
SWITCHBOARD

FIGURE 2, 2000 AMP
PORTABLE
SWITCHBOARD

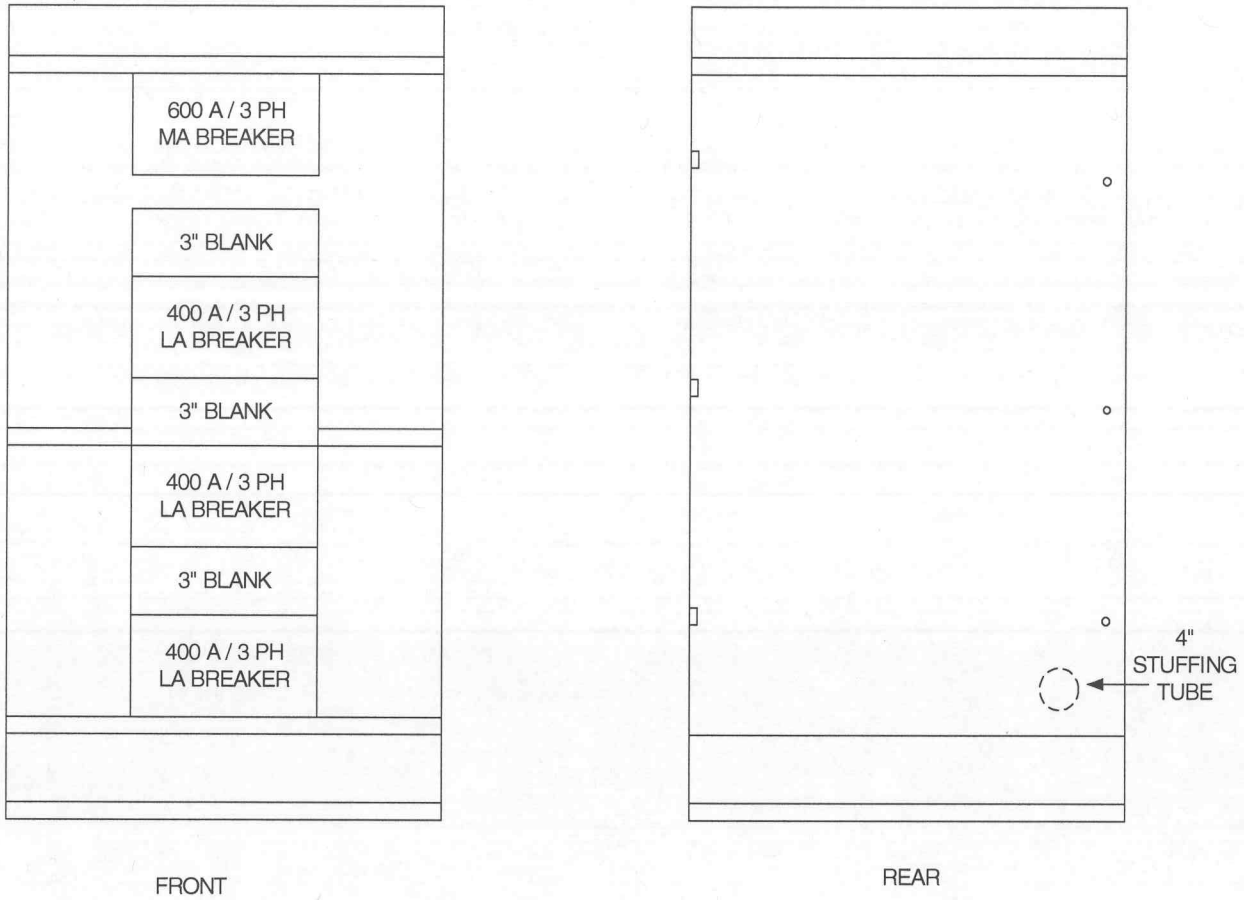

FIGURE 3
2000A- PORTABLE SWITCHBOARD

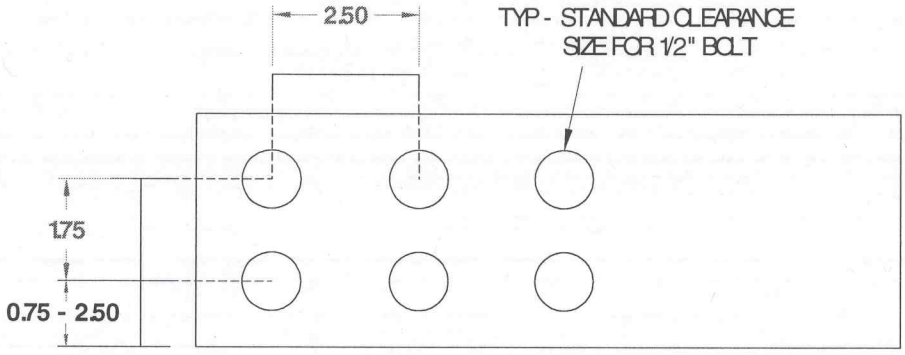

FRONT VIEW OF TYPICAL BUS BAR

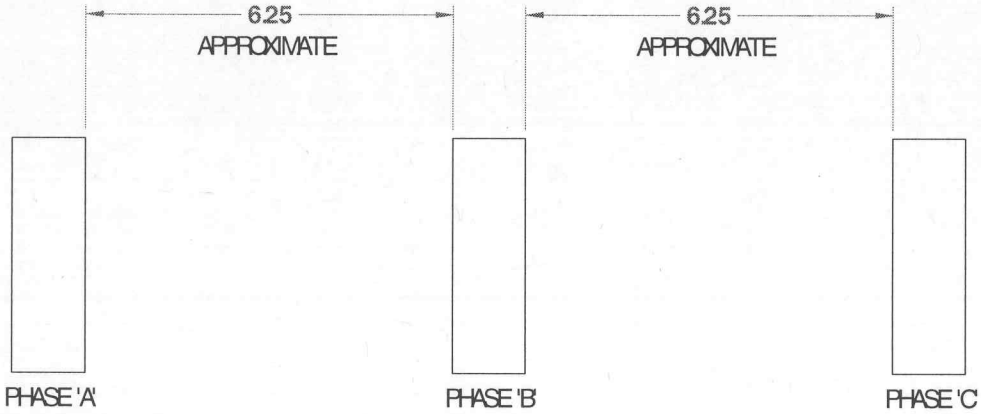

SIDE OR CUTAWAY VIEW OF COPPER BUS BARS