62753000

CONTRACT DATA REQUIREMENTS LIST

(1 Data Item)

Form Approved
OMB No. 0704-0188

Public reporting burden for this collection of information is estimated to average 110 hours per response, including the time for reviewing instructions, searching existing data sources, gathering and maintaining the data needed, and completing and reviewing the collection of information. Send comments regarding this burden estimate or any other aspect of this collection of information, including suggestions for reducing the burden, to Department of Defense, Washington Headquarters Services, Directorate for Information Operations and Reports (0704-0188), 1215 Jefferson Davis Highway, Suite 1204, Arlington VA 22202-4302. Please DO NOT RETURN your form to either of these address. Send completed form to the Government issuing Contracting Officer for the Contract/PR No. Listed in Block E.

A. CONTRACT LINE ITEM NO.	B. EXHIBIT	C. CATEGORY
0002AA	A	TDF ____ TM ____ OTHER X (NDTI)

D. SYSTEM/ITEM	E. CONTRACT/PR NO.	F. CONTRACTOR
Disposal Container		

1. DATA ITEM NO.	2. TITLE OF DATA ITEM	3. SUBTITLE
A001	TEST/INSPECTION REPORT	Weight Record Report

4. AUTHORITY *(Data Acquisition Document No.)*	5. CONTRACT REFERENCE	6. REQUIRING OFFICE
DI-NDTI-80809B	DWG 2301-3289 Rev K	PSNS & IMF C/300N.4

7. DD 250 REQ	9. DIST STATEMENT REQUIRED	10. FREQUENCY	12. DATE OF FIRST SUBMISSION
DD	N/A	OTIME	SEE BLK 16
8. APP CODE		**11. AS OF DATE**	**13. DATE OF SUBSEQUENT SUBMISSION**
A		N/A	N/A

16.

WEIGHT RECORD REPORT REQUIRED BY DWG 2301-3289 Rev. K – Para 19.A

BLOCK 8: WRITTEN WEIGHT RECORD REPORT SHALL BE SUBMITTED FOR GOVERNMENT APPROVAL. THE GOVERNMENT WILL HAVE 7 CALENDAR DAYS FOR REVIEW. THE CONTRACTOR SHALL HAVE 7 CALENDAR DAYS TO REVISE (IF REQUIRED) AND RESUBMIT FOR A NEW REVIEW. CONTRACTOR FORMAT IS ACCEPTABLE.

BLOCKS 10, 12, AND 13: WRITTEN WEIGHT RECORD REPORT SHALL BE PROVIDED SHOWING WEIGHT RECORD REPORT WAS SATISFACTORILY PERFORMED FOR EACH STORAGE CONTAINER WITH THE DELIVERY OF THE CONTAINER TO PSNS.

BLOCK 14: THE TEST REPORT SHALL BE PROVIDED IN ELECTRONIC UNPROTECTED SEARCHABLE PDF FORMAT WITH EMAIL NOTIFICATION TO ALL ADDRESSEES.

14. DISTRIBUTION

A. ADDRESSEE	b. COPIES Draft	Final Reg	Final Repr
PSNS C/300N.4	0	1	0
TOTAL	1	1	0

17. PRICE GROU

18. ESTIMATED TOTAL PRIC

G. PREPARED BY	H. DATE	H. APPROVED BY	J. DATE
R. Balter C/380.3	14 SEPT 2016		

DATA ITEM DESCRIPTION

Title: Test/Inspection Report
Number: DI-NDTI-80809B **Approval date: 970124**
AMSC Number: N/A **Limitation: N/A**
DTIC Applicable: N/A **GIDEP Applicable: N/A**
Office of Primary Responsibility: F/AFMC-DOP
Applicable Forms: N/A
Distribution Statement A: Approved for public release. Distribution is unlimited.

Description/Purpose: The test/inspection report is used to document test/inspection results, findings, and analyses that will enable the Government or Contracting Agency to evaluate compliance with system requirements, performance objectives, specifications, and test/inspection plans.

Application/interrelationship: This Data Item Description (DID) contains the format and content preparation instructions for the data product generated by the specific and discrete task requirement as delineated in the contract.

This DID is applicable to engineering (developmental), preliminary qualification, qualification, and acceptance testing.
This DID supersedes DI-NDTI-80809A and DI-MISC-80653.

Requirements:

1 Format. Contractor format is acceptable. Organize the information required by paragraph 2 and its subparagraphs in a manner that facilitates presentation and understanding.

2 Content. The test/inspection report shall contain the following information, as applicable.

2.1 The following information shall appear on the outside front cover and title page:

a. Report date
b. Report number (contractor or Government)
c. Contractor's name, address, and commercial and Government code
d. Contract number and contract line item number or sequence number (if applicable)
e. Type of test/inspection (for example, first article acceptance test, quality performance inspection, developmental test, qualification test, environmental test)
f. Identification of item tested/inspected
g. Date or period of test/inspection
h. Name and address of requiring Government activity
i. Security classification, downgrading and declassifying information, if applicable

2.2 Table of Contents. The table of contents shall identify the following:

a. The title and starting page of each major section, paragraph, and appendix of report
b. The page, identifying number, and title of each illustration (for example; figure, table, photograph, chart, drawing, etc.)

2.3 Introduction. The introduction shall include the following information:

2.3.1 Test/inspection objective(s). The specific test/inspection objective(s) as specified in the contract tasking document.

2.3.2 Item(s) tested/inspected. Complete identification of the item(s) tested/inspected including the following:

a. Nomenclature

b. National stock number
c. Model number, part number, and serial number
d. Type of item (for example; prototype, production item, laboratory model)
e. Serial or lot number
f. Applicable engineering changes
g. Production item specification, if applicable
h. Date of manufacture

2.3.3 Test/inspection requirements. Complete identification of the test/inspection requirements correlated to contractual requirements including the following:

a. Required test/inspection parameters
b. Performance requirements, acceptance or compliance limits, and environmental criteria

2.4 Summary. Complete test/inspection report summary including the following:

a. A brief discussion of the significant test/inspection results, observations, conclusions, and recommendations covered in greater detail elsewhere in the report
b. Proposed corrective actions and schedules for failures or problems encountered
c. Identification of deviations, departures, or limitations encountered, referenced to the contract requirements
d. Tables, graphs, illustrations, or charts as appropriate to simplify the summary data

2.5 Referenced documents. Complete identification of all documents referenced in the test/inspection report including the following, as applicable:

a. Prior test/inspection reports on the same item
b. Test/inspection plans and procedure documents
c. Prior certifications of compliance
d. Contractor's file designation where test/inspection records are maintained
e. Input parameters used

Note: The applicable issue of the documents cited therein, including their approval dates and dates of any applicable amendments, notices, and revisions, shall be as specified in the contract.

2.6 Body of report. The body of the test/inspection report shall be as follows:

2.6.1 Test equipment identification. Complete identification of each item of test equipment used in the test/inspection including the following:

a. Nomenclature
b. Model number
c. Serial number
d. Manufacture
e. Calibration status
f. Accuracy data
g. Comments, if applicable

2.6.2 Test/inspection facility installation and set-up. Complete description of the physical set-up used in conducting the test/inspection to include the following:

a. Location or orientation of the item
b. Location, orientation, or settings of test equipment and instrumentation
c. Location, orientation, or settings of sensors and probes
d. Location or orientation of interconnections, cables, and hoop-ups
e. Electrical power, pneumatic, fluidic, and hydraulic requirements

Drawings, illustrations, and photographs may be used for clarification

2.6.3 Test/inspection procedures. Complete description of the procedures used in conducting the test/inspection to include the following:

a. Item selection and inspection that verified suitability for test/inspection
b. Summarized sequence of testing/inspection steps, including a description of how the item was operated during the test/inspection, and any control condition imposed

2.6.4 Test/inspection results and analysis. A copy of all test/inspection results and analysis to include the following:

2.6.4.1 Recorded data. The actual recorded data (for example, log book entries, oscillographs, instrument readings, plotter graphs). If the recorded data is extensive, it shall be provided in an appendix.

2.6.4.2 Test/inspection results. Identification of all test/inspection results to include the following:

a. Matrices comparing results achieved against test/inspection objectives or requirements
b. A discussion of these matrices as to their significance, and how they compare to any prior test/inspection
c. Calculation examples
d. Discussion of any anomalies, deviations, discrepancies, or failures including their impact, causes, and proposed corrective actions. The discussion shall address discrepancies between design requirements and the tested/inspected configuration.

2.6.5 Conclusions. Test/inspection conclusions distinguished between objective and subjective to include the following:

a. The effectiveness of the test/inspection procedures in measuring item performance
b. The success or failure of the item to meet required test/inspection objectives
c. The need for repeat, additional, or alternative tests/inspections
d. The need for item redesign or further development
e. The need for improved test/inspection procedures, techniques, or facilities
f. The adequacy and completeness of the test/inspection requirements

2.6.6 Recommendations. Recommendations appropriate to the test/inspection results and conclusions including the following:

a. Acceptability of the item tested/inspected (pass or fail)
b. Additional testing/inspection required
c. Redesign required
d. Problem resolution
e. Test/inspection procedure or facility improvements
f. Disposition of items tested/inspected
g. Documentation changes required
h. Testing/inspection improvements

2.7 Authentication. The following certifications shall be included, as applicable:

2.7.1 Authentication of test/inspection results. A statement that the test/inspection was performed in accordance with applicable test/inspection plans and procedures, and that the results are true and accurate. The authentication shall include the signature of the contractor personnel that performed the test(s)/inspection(s), a contractor representative authorized to make such certification, and any Government witnesses.

2.7.2 Authentication of prior validation. A statement identifying those requirements not tested/inspected or measured that were previously validated. Include identification of the data and method employed for such validation (for example, prior to test/inspection, analytical verification, equivalent item, etc.). The authentication shall include the

signature of a contractor representative authorized to make such authentication and any Government witness.

2.7.3 Authentication of acceptability. A statement that the item tested/inspected either passed or failed item acceptability requirements. This authentication shall include the signature of a contractor representative authorized to make such authentication and any Government witness.

2.8 Appendices. Appendices shall be used to append detailed test/inspection data, drawings, photographs, or other documentation too voluminous to include in the main body of the report. This includes referenced documentation not previously provided by the Government, and test/inspection reports from any associated test/inspection activity that may have performed some of the testing/inspecting requirements.

3 End of DI-NDTI-80809B

CONTRACT DATA REQUIREMENTS LIST

(1 Data Item)

Form Approved
OMB No. 0704-0188

Public reporting burden for this collection of information is estimated to average 110 hours per response, including the time for reviewing instructions, searching existing data sources, gathering and maintaining the data needed, and completing and reviewing the collection of information. Send comments regarding this burden estimate or any other aspect of this collection of information, including suggestions for reducing the burden, to Department of Defense, Washington Headquarters Services, Directorate for Information Operations and Reports (0704-0188), 1215 Jefferson Davis Highway, Suite 1204, Arlington VA 22202-4302. Please DO NOT RETURN your form to either of these address. Send completed form to the Government issuing Contracting Officer for the Contract/PR No. Listed in Block E.

A. CONTRACT LINE ITEM NO.	B. EXHIBIT	C. CATEGORY
0002AB	B	TDF _____ TM _____ OTHER X (NDTI)

D. SYSTEM/ITEM	E. CONTRACT/PR NO.	F. CONTRACTOR
Disposal Containers		

1. DATA ITEM NO.	2. TITLE OF DATA ITEM	3. SUBTITLE
B001	TEST/INSPECTION REPORT	Load Test Records

4. AUTHORITY *(Data Acquisition Document No.)*	5. CONTRACT REFERENCE	6. REQUIRING OFFICE
DI-NDTI-80809B	DWG 2301-3289 Rev K	PSNS & IMF C/300N.4

7. DD 250 REQ	9. DIST STATEMENT REQUIRED	10. FREQUENCY	12. DATE OF FIRST SUBMISSION
DD	N/A	OTIME	SEE BLK 16
8. APP CODE		**11. AS OF DATE**	**13. DATE OF SUBSEQUENT SUBMISSION**
A		N/A	N/A

16.

PROVIDE LOAD TEST RECORDS PER DWG 2301-3289 Rev. K - PARA 19.B

BLOCK 8: WRITTEN LOAD TEST RECORDS SHALL BE SUBMITTED FOR GOVERNMENT APPROVAL. THE GOVERNMENT WILL HAVE 7 CALENDAR DAYS FOR REVIEW. THE CONTRACTOR SHALL HAVE 7 CALENDAR DAYS TO REVISE (IF REQUIRED) AND RESUBMIT FOR A NEW REVIEW. CONTRACTOR FORMAT IS ACCEPTABLE.

BLOCKS 10 and 12: WRITTEN LOAD TEST RECORDS SHALL BE PROVIDED SHOWING LOAD TESTING WAS SATISFACTORILY PERFORMED FOR EACH LIFT POINT AT THE TIME OF THE INITIAL BID SUBMISSION AND NO LESS THAN 14 DAYS PRIOR TO CONTRACT BEING AWARDED.

BLOCK 14: THE TEST REPORT SHALL BE PROVIDED IN ELECTRONIC UNPROTECTED SEARCHABLE PDF FORMAT WITH EMAIL NOTIFICATION TO ALL ADDRESSEES.

14. DISTRIBUTION

A. ADDRESSEE	b. COPIES Draft	Final Reg	Final Repr
PSNS C/300N.4	0	1	0
TOTAL	0	1	0

17. PRICE GRO

18. ESTIMATED TOTAL PRIC

G. PREPARED BY	H. DATE	H. APPROVED BY	J. DATE
R. BALTER	14 SEPT 2016		

DATA ITEM DESCRIPTION

Title: Test/Inspection Report
Number: DI-NDTI-80809B **Approval date: 970124**
AMSC Number: N/A **Limitation: N/A**
DTIC Applicable: N/A **GIDEP Applicable: N/A**
Office of Primary Responsibility: F/AFMC-DOP
Applicable Forms: N/A
Distribution Statement A: Approved for public release. Distribution is unlimited.

Description/Purpose: The test/inspection report is used to document test/inspection results, findings, and analyses that will enable the Government or Contracting Agency to evaluate compliance with system requirements, performance objectives, specifications, and test/inspection plans.

Application/interrelationship: This Data Item Description (DID) contains the format and content preparation instructions for the data product generated by the specific and discrete task requirement as delineated in the contract.

This DID is applicable to engineering (developmental), preliminary qualification, qualification, and acceptance testing.
This DID supersedes DI-NDTI-80809A and DI-MISC-80653.

Requirements:

1 Format. Contractor format is acceptable. Organize the information required by paragraph 2 and its subparagraphs in a manner that facilitates presentation and understanding.

2 Content. The test/inspection report shall contain the following information, as applicable.

2.1 The following information shall appear on the outside front cover and title page:

a. Report date
b. Report number (contractor or Government)
c. Contractor's name, address, and commercial and Government code
d. Contract number and contract line item number or sequence number (if applicable)
e. Type of test/inspection (for example, first article acceptance test, quality performance inspection, developmental test, qualification test, environmental test)
f. Identification of item tested/inspected
g. Date or period of test/inspection
h. Name and address of requiring Government activity
i. Security classification, downgrading and declassifying information, if applicable

2.2 Table of Contents. The table of contents shall identify the following:

a. The title and starting page of each major section, paragraph, and appendix of report
b. The page, identifying number, and title of each illustration (for example; figure, table, photograph, chart, drawing, etc.)

2.3 Introduction. The introduction shall include the following information:

2.3.1 Test/inspection objective(s). The specific test/inspection objective(s) as specified in the contract tasking document.

2.3.2 Item(s) tested/inspected. Complete identification of the item(s) tested/inspected including the following:

a. Nomenclature
b. National stock number
c. Model number, part number, and serial number
d. Type of item (for example; prototype, production item, laboratory model)
e. Serial or lot number
f. Applicable engineering changes
g. Production item specification, if applicable
h. Date of manufacture

2.3.3 Test/inspection requirements. Complete identification of the test/inspection requirements correlated to contractual requirements including the following:

a. Required test/inspection parameters
b. Performance requirements, acceptance or compliance limits, and environmental criteria

2.4 Summary. Complete test/inspection report summary including the following:

a. A brief discussion of the significant test/inspection results, observations, conclusions, and recommendations covered in greater detail elsewhere in the report
b. Proposed corrective actions and schedules for failures or problems encountered
c. Identification of deviations, departures, or limitations encountered, referenced to the contract requirements
d. Tables, graphs, illustrations, or charts as appropriate to simplify the summary data

2.5 Referenced documents. Complete identification of all documents referenced in the test/inspection report including the following, as applicable:

a. Prior test/inspection reports on the same item
b. Test/inspection plans and procedure documents
c. Prior certifications of compliance
d. Contractor's file designation where test/inspection records are maintained
e. Input parameters used

Note: The applicable issue of the documents cited therein, including their approval dates and dates of any applicable amendments, notices, and revisions, shall be as specified in the contract.

2.6 Body of report. The body of the test/inspection report shall be as follows:

2.6.1 Test equipment identification. Complete identification of each item of test equipment used in the test/inspection including the following:

a. Nomenclature
b. Model number
c. Serial number
d. Manufacture
e. Calibration status
f. Accuracy data
g. Comments, if applicable

2.6.2 Test/inspection facility installation and set-up. Complete description of the physical set-up used in conducting the test/inspection to include the following:

a. Location or orientation of the item
b. Location, orientation, or settings of test equipment and instrumentation
c. Location, orientation, or settings of sensors and probes
d. Location or orientation of interconnections, cables, and hoop-ups
e. Electrical power, pneumatic, fluidic, and hydraulic requirements

Drawings, illustrations, and photographs may be used for clarification

2.6.3 Test/inspection procedures. Complete description of the procedures used in conducting the test/inspection to include the following:

a. Item selection and inspection that verified suitability for test/inspection
b. Summarized sequence of testing/inspection steps, including a description of how the item was operated during the test/inspection, and any control condition imposed

2.6.4 Test/inspection results and analysis. A copy of all test/inspection results and analysis to include the following:

2.6.4.1 Recorded data. The actual recorded data (for example, log book entries, oscillographs, instrument readings, plotter graphs). If the recorded data is extensive, it shall be provided in an appendix.

2.6.4.2 Test/inspection results. Identification of all test/inspection results to include the following:

a. Matrices comparing results achieved against test/inspection objectives or requirements
b. A discussion of these matrices as to their significance, and how they compare to any prior test/inspection
c. Calculation examples
d. Discussion of any anomalies, deviations, discrepancies, or failures including their impact, causes, and proposed corrective actions. The discussion shall address discrepancies between design requirements and the tested/inspected configuration.

2.6.5 Conclusions. Test/inspection conclusions distinguished between objective and subjective to include the following:

a. The effectiveness of the test/inspection procedures in measuring item performance
b. The success or failure of the item to meet required test/inspection objectives
c. The need for repeat, additional, or alternative tests/inspections
d. The need for item redesign or further development
e. The need for improved test/inspection procedures, techniques, or facilities
f. The adequacy and completeness of the test/inspection requirements

2.6.6 Recommendations. Recommendations appropriate to the test/inspection results and conclusions including the following:

a. Acceptability of the item tested/inspected (pass or fail)
b. Additional testing/inspection required
c. Redesign required
d. Problem resolution
e. Test/inspection procedure or facility improvements
f. Disposition of items tested/inspected
g. Documentation changes required
h. Testing/inspection improvements

2.7 Authentication. The following certifications shall be included, as applicable:

2.7.1 Authentication of test/inspection results. A statement that the test/inspection was performed in accordance with applicable test/inspection plans and procedures, and that the results are true and accurate. The authentication shall include the signature of the contractor personnel that performed the test(s)/inspection(s), a contractor representative authorized to make such certification, and any Government witnesses.

2.7.2 Authentication of prior validation. A statement identifying those requirements not tested/inspected or measured that were previously validated. Include identification of the data and method employed for such validation (for example, prior to test/inspection, analytical verification, equivalent item, etc.). The authentication shall include the

CONTRACT DATA REQUIREMENTS LIST
(1 Data Item)

Form Approved
OMB No. 0704-0188

Public reporting burden for this collection of information is estimated to average 110 hours per response, including the time for reviewing instructions, searching existing data sources, gathering and maintaining the data needed, and completing and reviewing the collection of information. Send comments regarding this burden estimate or any other aspect of this collection of information, including suggestions for reducing the burden, to Department of Defense, Washington Headquarters Services, Directorate for Information Operations and Reports (0704-0188), 1215 Jefferson Davis Highway, Suite 1204, Arlington VA 22202-4302. Please DO NOT RETURN your form to either of these address. Send completed form to the Government issuing Contracting Officer for the Contract/PR No. Listed in Block E.

A. CONTRACT LINE ITEM NO.	B. EXHIBIT	C. CATEGORY
0002AC	A	TDP ____ TM ____ OTHER X (MISC)

D. SYSTEM/ITEM	E. CONTRACT/PR NO.	F. CONTRACTOR
Disposal Containers		

1. DATA ITEM NO.	2. TITLE OF DATA ITEM	3. SUBTITLE
C01	Certification/Data Report	Certification of Compliance

4. AUTHORITY *(Data Acquisition Document No.)*	5. CONTRACT REFERENCE	6. REQUIRING OFFICE
DI-MISC-80678	2301-3289 Rev K Para 19.c	PSNS & IMF C/300N.4

7. DD 250 REQ	9. DIST STATEMENT REQUIRED	10. FREQUENCY	12. DATE OF FIRST SUBMISSION	14. DISTRIBUTION
XX	N/R	OTIME	SEE BLOCK 16	See Block 16
8. APP CODE		**11. AS OF DATE**	**13. DATE OF SUBSEQUENT SUBMISSION**	
N/A		N/A	N/A	

17. PRICE GRO

18. ESTIMATED TOTAL PRIC

A. ADDRESSEE	b. COPIES Draft	Final Reg	Final Repr
PSNS C/300N.4	0	1	0
TOTAL	0	1	0

16. REMARKS

Required COC Documentation per DWG 2301-3289 Rev. K:

A) Product Certification of Compliance per PARA 19.c

BLOCK 3: THE CERTIFICATION OF COMPLIANCE TO SPECIFICATION REQUIREMENTS STATEMENT SHALL BE IN THE CONTRACTOR'S FORMAT.

BLOCK 12: THE CONTRACTOR SHALL PROVIDE THE CERTIFICATION OF COMPLIANCE TO CONTRACT SPECIFICATION REQUIREMENTS TEN (10) DAYS AFTER FINAL ACCEPTANCE.

BLOCK 14: THE CONTRACTOR SHALL PROVIDE ONE COPY OF THE CERTIFICATION OF COMPLIANCE TO CONTRACT SPECIFICATION REQUIREMENTS STATEMENT IN ELECTRONIC UNPROTECTED SEARCHABLE PDF FORMAT TO THE FOLLOWING GOVERNMENT TECHNICAL POINT OF CONTACT:

G. PREPARED BY	H. DATE	I. APPROVED BY	J. DATE
Rich Balter	14 SEPT 2016		

DATA ITEM DESCRIPTION

Title: Certification/Data Report
Number: DI-MISC-80678
AMSC Number: N4533
DTIC Applicable: N/A
Office of Primary Responsibility: N/SEA 55Z3
Applicable Forms: N/A

Approval Date: 880912
Limitation: N/A
GIDEP Applicable: N/A

1 **Use/relationship:** Certification data is required to verify that specific qualifications have been obtained, tests have been performed, parts/assemblies/equipment/systems have been installed, tested, inspected and are ready for operation; that personnel have specific qualifications to perform assignments/operations/inspections; or to certify identicality, interchangeability, compatibility, reliability, or completeness of documentation being prepared or reviewed by a contractor. The technical effort involved shall be the result of equipment/procurement specification requirements.

1.1 Certification may be required for a single event/operation, or may be required for a specified time period, or certification may be required on a continuing basis with periodic re-certification or updating of the original certification.

1.2 The technical content requirements for this item shall be specified in the contract.

This DID supersedes UDI-A-23264B.

2 **Requirements**:

2.1 Format. The report shall be typewritten in narrative format on the contractor's form.

2.2 Content. The report shall contain the contract number and data item sequence number, and shall contain a statement the specifically identifies the purpose and applicability of this certification.

2.3 Certification of completion. Certification that tests have been performed, inspections made, parts/assemblies/equipment/systems have been installed, tested, inspected, and area ready for operation, or that specific qualifications have been obtained shall provide objective evidence in support of the certification. Objective evidence may include such items as spectrographs, radiographs, material sampling, analysis, inspection and testing reports, or any other necessary documentation.

2.4 Certification of personnel. Certifications that personnel have specific qualifications shall be supported by licenses, permits, tests, statements of competency, or other documentation. The specific capabilities to perform an assignment, inspection, or other operations shall be stated in the certification.

2.5 Certification of data reviews. Certifications that documentation/data has been reviewed shall contain a statement of the "depth" of the examination and the results thereof. If the documentation being reviewed cannot be certified, the report shall so state and shall list the reasons, i.e., deficiencies, conflicting data, etc.

2.6 Certification of compliance. Certification of compliance to specific specification requirements shall be a statement to the effect that the contractor has complied.

3 **Technical content**:

3.1 The technical content shall be as specified on the DD Form 1423, Contract Date Requirements List.

3.2 Supplemental information. Additional specific material, drawings, sketches, photographs, etc., in support of these certifications shall be as defined in the DD Form 1423.

3.3 Signature. The certification report shall be signed by the contractor's authorized representative responsible for insuring that the equipment being delivered/service being performed is in accordance with contract requirements.

4 **End of DI-MISC-80678**

62753000

CONTRACT DATA REQUIREMENTS LIST

(1 Data Item)

Form Approved
OMB No. 0704-0188

Public reporting burden for this collection of information is estimated to average 110 hours per response, including the time for reviewing instructions, searching existing data sources, gathering and maintaining the data needed, and completing and reviewing the collection of information. Send comments regarding this burden estimate or any other aspect of this collection of information, including suggestions for reducing the burden, to Department of Defense, Washington Headquarters Services, Directorate for Information Operations and Reports (0704-0188), 1215 Jefferson Davis Highway, Suite 1204, Arlington VA 22202-4302. Please DO NOT RETURN your form to either of these address. Send completed form to the Government issuing Contracting Officer for the Contract/PR No. Listed in Block E.

A. CONTRACT LINE ITEM NO.	B. EXHIBIT	C. CATEGORY
0002AD	D	TDF ____ TM ____ OTHER X (NDTI)

D. SYSTEM/ITEM	E. CONTRACT/PR NO.	F. CONTRACTOR
Disposal Containers		

1. DATA ITEM NO.	2. TITLE OF DATA ITEM	3. SUBTITLE
D01	TEST/INSPECTION REPORT	NDT/Proof Test

4. AUTHORITY *(Data Acquisition Document No.)*	5. CONTRACT REFERENCE	6. REQUIRING OFFICE
DI-NDTI-80809B	DWG 2301-3411 Rev D	PSNS & IMF C/300N.4

7. DD 250 REQ	9. DIST STATEMENT REQUIRED	10. FREQUENCY	12. DATE OF FIRST SUBMISSION
DD	N/A	OTIME	SEE BLK 16
8. APP CODE		**11. AS OF DATE**	**13. DATE OF SUBSEQUENT SUBMISSION**
A		N/A	N/A

16.

BLOCK 8: WRITTEN NDT/PROOF TEST REPORT SHALL BE SUBMITTED FOR GOVERNMENT APPROVAL. THE GOVERNMENT WILL HAVE 7 CALENDAR DAYS FOR REVIEW. THE CONTRACTOR SHALL HAVE 7 CALENDAR DAYS TO REVISE (IF REQUIRED) AND RESUBMIT FOR A NEW REVIEW. CONTRACTOR FORMAT IS ACCEPTABLE.

BLOCKS 10 and 12: WRITTEN LOAD TEST RECORDS SHALL BE PROVIDED SHOWING LOAD TESTING WAS SATISFACTORILY PERFORMED FOR EACH LIFT POINT AT THE TIME OF THE INITIAL BID SUBMISSION AND NO LESS THAN 14 DAYS PRIOR TO CONTRACT BEING AWARDED.

BLOCK 14: THE TEST REPORT SHALL BE PROVIDED IN ELECTRONIC UNPROTECTED SEARCHABLE PDF FORMAT WITH EMAIL NOTIFICATION TO ALL ADDRESSEES.

14. DISTRIBUTION

A. ADDRESSEE	b. COPIES Draft	Final Reg	Final Repr
PSNS C/300N.4	0	1	0
TOTAL	0	1	0

17. PRICE GRO

18. ESTIMATED TOTAL PRIC

G. PREPARED BY	H. DATE	H. APPROVED BY	J. DATE
R. BALTER	14 SEPT 2016		

DATA ITEM DESCRIPTION

Title: Test/Inspection Report
Number: DI-NDTI-80809B **Approval date: 970124**
AMSC Number: N/A **Limitation: N/A**
DTIC Applicable: N/A **GIDEP Applicable: N/A**
Office of Primary Responsibility: F/AFMC-DOP
Applicable Forms: N/A
Distribution Statement A: Approved for public release. Distribution is unlimited.

Description/Purpose: The test/inspection report is used to document test/inspection results, findings, and analyses that will enable the Government or Contracting Agency to evaluate compliance with system requirements, performance objectives, specifications, and test/inspection plans.

Application/interrelationship: This Data Item Description (DID) contains the format and content preparation instructions for the data product generated by the specific and discrete task requirement as delineated in the contract.

This DID is applicable to engineering (developmental), preliminary qualification, qualification, and acceptance testing.
This DID supersedes DI-NDTI-80809A and DI-MISC-80653.

Requirements:

1 Format. Contractor format is acceptable. Organize the information required by paragraph 2 and its subparagraphs in a manner that facilitates presentation and understanding.

2 Content. The test/inspection report shall contain the following information, as applicable.

2.1 The following information shall appear on the outside front cover and title page:

a. Report date
b. Report number (contractor or Government)
c. Contractor's name, address, and commercial and Government code
d. Contract number and contract line item number or sequence number (if applicable)
e. Type of test/inspection (for example, first article acceptance test, quality performance inspection, developmental test, qualification test, environmental test)
f. Identification of item tested/inspected
g. Date or period of test/inspection
h. Name and address of requiring Government activity
i. Security classification, downgrading and declassifying information, if applicable

2.2 Table of Contents. The table of contents shall identify the following:

a. The title and starting page of each major section, paragraph, and appendix of report
b. The page, identifying number, and title of each illustration (for example; figure, table, photograph, chart, drawing, etc.)

2.3 Introduction. The introduction shall include the following information:

2.3.1 Test/inspection objective(s). The specific test/inspection objective(s) as specified in the contract tasking document.

2.3.2 Item(s) tested/inspected. Complete identification of the item(s) tested/inspected including the following:

a. Nomenclature
b. National stock number
c. Model number, part number, and serial number
d. Type of item (for example; prototype, production item, laboratory model)
e. Serial or lot number
f. Applicable engineering changes
g. Production item specification, if applicable
h. Date of manufacture

2.3.3 Test/inspection requirements. Complete identification of the test/inspection requirements correlated to contractual requirements including the following:

a. Required test/inspection parameters
b. Performance requirements, acceptance or compliance limits, and environmental criteria

2.4 Summary. Complete test/inspection report summary including the following:

a. A brief discussion of the significant test/inspection results, observations, conclusions, and recommendations covered in greater detail elsewhere in the report
b. Proposed corrective actions and schedules for failures or problems encountered
c. Identification of deviations, departures, or limitations encountered, referenced to the contract requirements
d. Tables, graphs, illustrations, or charts as appropriate to simplify the summary data

2.5 Referenced documents. Complete identification of all documents referenced in the test/inspection report including the following, as applicable:

a. Prior test/inspection reports on the same item
b. Test/inspection plans and procedure documents
c. Prior certifications of compliance
d. Contractor's file designation where test/inspection records are maintained
e. Input parameters used

Note: The applicable issue of the documents cited therein, including their approval dates and dates of any applicable amendments, notices, and revisions, shall be as specified in the contract.

2.6 Body of report. The body of the test/inspection report shall be as follows:

2.6.1 Test equipment identification. Complete identification of each item of test equipment used in the test/inspection including the following:

a. Nomenclature
b. Model number
c. Serial number
d. Manufacture
e. Calibration status
f. Accuracy data
g. Comments, if applicable

2.6.2 Test/inspection facility installation and set-up. Complete description of the physical set-up used in conducting the test/inspection to include the following:

a. Location or orientation of the item
b. Location, orientation, or settings of test equipment and instrumentation
c. Location, orientation, or settings of sensors and probes
d. Location or orientation of interconnections, cables, and hoop-ups
e. Electrical power, pneumatic, fluidic, and hydraulic requirements

Drawings, illustrations, and photographs may be used for clarification

2.6.3 Test/inspection procedures. Complete description of the procedures used in conducting the test/inspection to include the following:

a. Item selection and inspection that verified suitability for test/inspection
b. Summarized sequence of testing/inspection steps, including a description of how the item was operated during the test/inspection, and any control condition imposed

2.6.4 Test/inspection results and analysis. A copy of all test/inspection results and analysis to include the following:

2.6.4.1 Recorded data. The actual recorded data (for example, log book entries, oscillographs, instrument readings, plotter graphs). If the recorded data is extensive, it shall be provided in an appendix.

2.6.4.2 Test/inspection results. Identification of all test/inspection results to include the following:

a. Matrices comparing results achieved against test/inspection objectives or requirements
b. A discussion of these matrices as to their significance, and how they compare to any prior test/inspection
c. Calculation examples
d. Discussion of any anomalies, deviations, discrepancies, or failures including their impact, causes, and proposed corrective actions. The discussion shall address discrepancies between design requirements and the tested/inspected configuration.

2.6.5 Conclusions. Test/inspection conclusions distinguished between objective and subjective to include the following:

a. The effectiveness of the test/inspection procedures in measuring item performance
b. The success or failure of the item to meet required test/inspection objectives
c. The need for repeat, additional, or alternative tests/inspections
d. The need for item redesign or further development
e. The need for improved test/inspection procedures, techniques, or facilities
f. The adequacy and completeness of the test/inspection requirements

2.6.6 Recommendations. Recommendations appropriate to the test/inspection results and conclusions including the following:

a. Acceptability of the item tested/inspected (pass or fail)
b. Additional testing/inspection required
c. Redesign required
d. Problem resolution
e. Test/inspection procedure or facility improvements
f. Disposition of items tested/inspected
g. Documentation changes required
h. Testing/inspection improvements

2.7 Authentication. The following certifications shall be included, as applicable:

2.7.1 Authentication of test/inspection results. A statement that the test/inspection was performed in accordance with applicable test/inspection plans and procedures, and that the results are true and accurate. The authentication shall include the signature of the contractor personnel that performed the test(s)/inspection(s), a contractor representative authorized to make such certification, and any Government witnesses.

2.7.2 Authentication of prior validation. A statement identifying those requirements not tested/inspected or measured that were previously validated. Include identification of the data and method employed for such validation (for example, prior to test/inspection, analytical verification, equivalent item, etc.). The authentication shall include the

signature of a contractor representative authorized to make such authentication and any Government witness.

2.7.3 Authentication of acceptability. A statement that the item tested/inspected either passed or failed item acceptability requirements. This authentication shall include the signature of a contractor representative authorized to make such authentication and any Government witness.

2.8 Appendices. Appendices shall be used to append detailed test/inspection data, drawings, photographs, or other documentation too voluminous to include in the main body of the report. This includes referenced documentation not previously provided by the Government, and test/inspection reports from any associated test/inspection activity that may have performed some of the testing/inspecting requirements.

3 End of DI-NDTI-80809B

General Notes

1. This drawing provides information to manufacture and assemble one LSTR container (RF 8143-0001) or one TB container (RF 8551). Materials and construction are similar for both containers. All General Notes apply to both containers except where noted.

2. On the top surface of the top plate (PC-5), stamp in 1/2" minimum high letters the following:

   DWG 2301-3289 *[Stamp "**RF 8143-0001**" for the LSTR container or "**RF 8551**" for the TB Container]* **SPS**

3. Where MIL-specs, standards, process instructions, are noted on the drawing, the latest revisions shall be in effect unless a specific revision is specified.

4. Unless specified otherwise on the drawing, all tolerances shall be +/- 1/16" for dimensions less than and equal to 24" and +/- 1/8" for dimensions over 24". Angular tolerances shall be +/- 1 degree.

5. Break all sharp edges to a 1/32" chamfer (minimum) and remove all weld splatter from exposed surfaces.

6. Welding requirements (also see Note 19B):

   A. Weld sizes in this drawing are the minimum acceptable. Minimum bevel angle on all bevel welds is 45-degrees per single bevel. Weld symbols shown are in accordance with Reference B (AWS A2.4).

   B. Welding shall be performed to Reference A (AWS D1.1) and by AWS D1.1 qualified welders.

   C. Corners may be chamfered to clean fillets of previously deposited welds. Close these chamfers by welding where possible.

   D. Welds shall be sequenced to minimize distortion. Where distortion does occur, straightening per Reference A shall be performed to achieve tolerances of the drawing.

   E. Visual inspect all welds according to the reference used to perform the welds (Reference A. See Note 6.B)

   F. Perform a magnetic particle test (MT) inspection of the specified welds per Reference C (NAVSEA Technical Publication T9074-AS-GIB-010/271(TP-271)). Use the acceptance criteria of Reference D (MIL-STD-2035) Class 3 for welds and forgings/wrought material for base material (also see Note 19B).

7. **Painting methods.** This general note applies to painting procedures following initial fabrication and any future maintenance of equipment manufactured per this drawing. Colors may be used to match existing if available or as otherwise specified below.

   A. Paint all exposed surfaces, including the inside surfaces of the four chambers (inside of each Pc-2 and exposed surface of each Pc-3 that forms the chamber floor), except as follows: Do not paint threaded portions of fasteners or holes, o-rings, the seal gland surfaces of Pc-5, the 11/16" dia. alignment-holes of Pc-5 (View 7B) or the flange seating surface of Pc-13.

   B. Preparation: Abrasive blast surfaces to near white metal prior to painting. If abrasive blasting is not appropriate, other mechanical means such as chipping or sanding may be used.

   C. Paint / coating system: Paint steel surfaces with two coats of AMERCOAT 235 paint conforming to MIL-PRF-23236. The first coat shall be red or alternate color, applied to a dry film thickness (DFT) of 4 mils (min). The top coat shall be black, applied to a DFT of 4 mils (min). Note: AMERCOAT 235 was formerly known as "BAR-RUST 235" and "DEVOE 235".

8. Material substitutions are authorized provided the substitution material meets or exceeds the mechanical/physical properties and satisfies the dimensional requirements of the material being substituted.

9. Upon completion of fabrication or refit per General Note 16, measure the empty container weight with Finish Plugs (View 12A) installed. For each container, the estimated empty container weight with Finish Plugs installed and the capacity is listed in Table 2A-2.

10. 1 1/4"-7 UNC-2B Safety Hoist Ring lift holes, two in the Top Plate (PC-5, View 7B), and one in each Lift block (Pc-18, View 8A), are provided for lifting and handling. Check that a 1 1/4"-7UNC Safety Hoist Ring seats properly in each of these six lift holes. If the ring seating surface does not seat flush to the surface, mill a proper seating surface for the ring down no more than 1/16". For each lift hole, perform a proof test and an acceptance test per Reference E. Following satisfactory completion of the acceptance test of Reference E, provide certified record that the test was performed and that the lift hole meets the acceptance criteria of Reference E. Touch-up paint affected areas per General Note 7.

11. In addition to the markings specified in General Note 2, following satisfactory completion of hoist ring proof tests per General Note 10, stamp PC-5 as follows. Do not stamp within the seating surface areas around the lift holes:

   K **SPS Capacity** *[Container capacity from Table 2A-2 plus container weight as determined by weighing and rounding up to the next highest 100 lbs. the empty container with finish plugs installed.]*
   Certified *[Date of proof test and satisfactory acceptance per General Note 10]*.

12. A single 5/16"-18 UNC-2B lift hole in the Finish flange (Pc-13) of each Finish Plug Assembly (View 12A) is drilled and tapped to accept a 5/16"-18UNC Safety Hoist Ring. Check that a 5/16"-18UNC Safety Hoist Ring seats properly to the Finish Flange (Pc-13). If the ring seating surface does not seat flush to the surface of Pc-13, mill a proper seating surface on Pc-13 down no more than 1/16". For each Finish Plug lift hole, perform a proof test and an acceptance test per Reference E. Estimated weight of the Finish Plug Assembly is 10 lbs. Upon satisfactory completion of the test, prepare a certified record of the actual weight of the Finish Plug Assembly and results of the inspection and acceptance test of Reference E. Stamp the top surface of each Pc-13 flange as follows. Touch-up paint affected areas per General Note 7. Do not stamp within the seating surface areas around the lift holes:

   Dwg 2301-3289
   Weight *[Determine by weighing to nearest 1 lbs.]*
   Certified *[Inspection & acceptance test completion date]*.

13. The temporary cover (View 11A) may be locked with an approved locking device that engages the cover eyebolts (Pc-10, Views 10A & 11A) and precludes their being unthreaded from the Top Plate (Pc-5). In any case, when the temporary cover is installed, the eyebolts, if threaded into the Top Plate (Pc-5), should be so threaded no more than finger tight.

14. Torque specification for the Pc-14 flange bolts is 300 + 12 in-lbs. The plug bolts and plug screws, Pc-20 & 22, should be hand tight.

15. **Delivery requirements.** For manufacture contract delivery, secure containers to individual pallets or other cribbing that will allow containers to be handled singly by forklift.

16. **Void fill.** Prior to installing the Top Plate (Pc-5), fill the void spaces inside Pc-19 and around the outside of Pc-2 chamber pipes to the top edge of Pc-19 with Perlite (Pc-24 material; see Section View 17B). Measure the volume of void fill installed. The minimum fill material volume required to be installed is listed in Table 2A-1. New containers not in use and fabricated without void fill may be retrofitted with void fill per View 16C. Existing containers in use and fabricated without void fill may be retrofitted with void fill per View 18C. For each container, upon completion of void fill operations performed during initial fabrication or on retrofit, record the volume of void fill material (Pc-24) installed and prepare a Certificate of Compliance listing the type and volume of void fill installed. Following completion of void fill retrofit, measure the weight of the empty container weight (with finish plugs installed) per General Note 9. *and re-stamp the SPS capacity information per General Note 11*

17. **Cleanliness Requirements.** Before and after painting, ensure all accessible surfaces be visibly free of cutting fluid, tape residue, machine chips, grease, oil, flux, dirt, grit, scale, rust, smeared metal, weld splatter, or any other foreign material. Pay special attention to the inside of the container's four chambers (inside of each Pc-2 and exposed top surface of each Pc-3 that forms the chamber floor), ensure there are no sharp edges or sharp protrusions that could pierce or rip plastic wrappings/packaging-material, at a later time during the loading of items into the four chambers of the LS/TR or TB container.

(General Notes continued onto Sheet 7)

References

A. AWS D1.1/D1.1M; Structural Welding Code
B. AWS A2.4; Standard symbols for welding, brazing and nondestructive examination
C. NAVSEA Technical Publication T9074-AS-GIB-010/271 (TP-271) Requirements for nondestructive testing methods
D. MIL-STD-2035; Nondestructive Testing Acceptance Criteria
E. Drawing 2301-3411; Torque-based Proof Test for Safety Hoist Ring Lift Holes

Table 2A-2
Weights, CG & Reference Dimensions

Symbol	Description	View, note or location	Dimension: LSTR Container RF 8143-0001	Dimension: TB Container RF 8551
Weight	Approximate weight of empty container with Finish Plugs installed	General Note 11	16,750 lbs.	12,750 lbs
Capacity	Maximum weight of material allowed to be loaded into the container	General Note 11	750 lbs.	4,750 lbs.
ECG	C.G. elevation above base plane, Empty container with Finish Plugs installed (Reference)	Elevation View 9B	74.3"	55.0"
OCH	Open container height (Reference)	Elevation View 9B	149 ½"	110 ½"
CVD	Cavity depth: Upper surface of Pc-5 Top Plate to upper surface of Pc-3 Base Plug	Assembly View 8B sectional	145 ½"	106 ½"

Table 2A-1
Piece & Assembly Dimensions

Symbol	Description	View, note or location	Dimension: LSTR Container RF 8143-0001	Dimension: TB Container RF 8551
L1	Length of Pc-1, 2 & 19	List of Materials Description Pc-1, Pc-2 & Pc-19	144 ½"	105 ½"
Pc-24	Minimum volume of installed void fill material required	General Note 16; List of Materials, Pc-24; Views 16C & 18C; Section View 17B	30,000 in^3	21,900 in^3

REVISION

SYM	BY	DATE	CHK	DATE	DESCRIPTION	APPROVAL
A	/S/J. Kineman	8-23-02	/S/J. Escalante	8-23-02	1. Reflect as built condition. 2. Correct typographical errors 3. Provide clarification.	
B	/S/J. Kineman	10-3-03	/S/ V. Tejeda	10-3-03	I. New container type added: RF 8551, "TB Storage & Disposal Container". RF 8143-0001 is a "LSTR Storage & Disposal container" built to Rev B and later. **The following changes apply to these containers only, and not to any RF 8143 containers built before Rev B:** 1. RF numbers changed in General Notes 1 & 2 2. Pc-6 Lift Ring deleted; Inner Shield Assembly (New Pc-19 and new Sheet 5) added; concrete fill deleted. 3. General Note 10 and Figure 6B deleted. New Reference added for proof test of threaded lift holes. 4. Tables 2A-1 and 2A-2 added to list the disparate elements of the RF 8143-0001 and RF 8551 containers; List of Materials ammended accordingly. 5. Threaded lift holes in Pc-5 changed to 1 1/4-7 UNC-2B (Plan View 7B); process note added to reccommend limits on hole dimension before tapping, and to reccommend use of 3B tap. 6. Welding and painting requirements and references re-written for fabrication by non-government facility. 7. Sensative information removed from drawing and drawing classification updated to "unclassified". **II. The following changes apply to to all containers (RF 8143, 8143-0001 & 8551):** 1. Incorporated DRN B-1 concerning inclusion of finish plugs in container design weight (General Note 11). 2. Incorporated DRN B-2 adding C/105.23 concurrence. 3. Added information concerning the temporary cover eye bolts (General Note 13).	

(Revision Block continued on sheet 7)

DISTRIBUTION STATEMENT: N/A

A.D.C. REVIEW

SIGNATURE	DATE
/S/ J. Byrnes	6-10-2015

CAD INFORMATION: SHEETS OF THIS DRAWING WERE COMPOSED USING SOLID EDGE

CONCURRENCE

CODE	2370.25	2370.21	300N.4	500R	105.24	105.23
SIGN	/s/S. Palmer	/s/J. Byrnes	/s/V. Tejeda	/s/S. Miller	/s/S. Grasmick	/s/D. Martinsen
DATE	3-01-02	3-01-02	3-01-02	2-22-02	2-22-02	6-24-03
CODE	138	38				
SIGN	/s/R.D. Wilson	/s/R. Machinski				
DATE	3-01-02	2-22-02				

NO DEVIATIONS SHALL BE MADE

APPROVAL	SIGNATURE	DATE
BRANCH SUPV.	/s/S. Florio	3-01-02
SECTION SUPV.	N/A	
CHECKED	/s/M. Schroder	3-01-02
DRAWN	/s/J. Kineman	3-01-02
DESIGNED	/s/J. Kineman	3-01-02

PUGET SOUND NAVAL SHIPYARD
ENGINEERING DIVISION, CODE 2370

UNLESS OTHERWISE SPECIFIED, DIMENSIONS ARE IN INCHES
TOLERANCES ON FRACTIONS: (see Note 4)
Decimals: As specified Angles: As specified

TITLE
LS/TR & TB Disposal Containers

NOT TO SCALE | DRAWING NO. 2301-3289 | REV K | Sheet 1 of 7

DWG REVISION SUM.

J.O. NUMBER	ESTIMATOR	CODE/PHONE
7783700004	R. O. MOSENG	6-2711

PRINT ISSUE RECORD

SHEET	REV	TITLE	DWG NO.
1	K	LS/TR & TB Disposal Container	2301-3289

List of Materials

Pc	Qty	Name	Description	Specification	Material
1	1	Shell	Plate 61.20# (1-1/2") x 32" rolled OD (100-1/2" approx. circumference) x "L1" from Table 2A-1	Seamless or welded ASTM A53, A500 or A106 or rolled ASTM A36 or better	OS
2	4	Cavity pipe	Pipe 10" Nom. SCH-160 (10.75" OD x 1.125" wall) x "L1" from Table 2A-1	Seamless or welded ASTM A 53, A500 or A106	OS
3	4	Base plug	Plate 81.60# (2") x 8-1/2" Diam.	ASTM A36 or better	OS or HS
4	1	Base plate	Plate 81.60# (2") x 37" x 37"	ASTM A36 or better	OS or HS
5	1	Top plate	Plate 122.40# x 32" OD	ASTM A36 or better	OS or HS
6	1	Lift ring	Deleted by Rev. B, Para. I.2.		
K 7	4	Cover insert	Deleted by Rev. K		
8	4	Cover flange	Plate 10.20# (1/4") x 12-1/8" Diam.	ASTM A36 or better	OS or HS
9	4	Handle	Stock round bar, 1/2" LAR		OS
10	8	Eye bolt	1/2-13 UNC-2A x 1-1/2" Sholder eye bolt, modified	Fastenal 42314 or equivalent	OS
K 11	3	Alignment pin	Deleted by Rev K		
12	4	Finish plug	Plate 183.60# x 8-1/4" Diam.	ASTM A36 or better	OS or HS
13	4	Finish flange	Plate 40.80# x 12-1/8" Diam.	ASTM A36 or better	OS or HS
14	12	Bolt	5/8-11 UNC x 2" Hex bolt	ASTM A325	OS
15	12	Washer	5/8" washer	ASTM F436	OS
16	4	Finish alignment pin	Dowel 5/8" x 1-3/8" min. L		OS
17	4	O-ring	O-ring AS-568a-447 (9" Nom. ID x 1/4" Nom. CS)	Parker or equivalent	Viton
18	4	Lift block	Plate 117.3#(2-7/8" THK) x 6-3/4" x 6-3/4"	ASTM A36 or better	OS or HS
19	1	Inner shield	Plate 35.70# (7/8") x 29" max. rolled OD (91-1/8" approx. circumference) x "L1" from Table 2A-1	Seamless or welded ASTM A53, A500 or A106 or rolled ASTM A36 or better	OS
20	6	Plug bolt	Hex cap screw 1 1/4" -7 UNC x 2" Grade 5 plain	ASME B18.2.1	OS
21	6	Washer	Washer 1-1/4" Regular Plain	ANSI B18.22.1	OS
22	4	Plug screw	Hex cap screw 5/16"-18 UNC x 3/4" Grade 5 plain	ASME B18.2.1, Fastenal No. 12051 or equivalent	OS
23	4	Washer	Washer 5/16" Regular Plain	ANSI B18.22.1	OS
24	1	Void fill material	Perlite fill material (See General Note 16, Table 2A-1 and Section View 17B)	Plaster/Concrete Grade-Heavy (P/C-H) Perlite of Supreme Perlite Company (Portland, Oregon)	Perlite P/C-H
25	5	Round stock	Round stock 1" diameter x 3" min. length (For void fill retrofit only. See General Note 16)		OS
26	5	Countersunk plug	3/4-14 NPT Countersunk pipe plug, Hexagon socket (For void fill retrofit only. See General Note 16)	ASME B16.14	OS
27	1	Thread compound	Thread compound, 50 cc tube (for void fill retrofit only. See General Note 16 and View 18C notes.)	Henkel Loctite Corp. Anaerobic sealant, white paste PST 580 Low halogen/low sulfur pipe sealant (PSNS NIIN 013293396.	Chemical sealant

(**Note**: Pc-25, 26 & 27 are for retrofit addition of filler material (Pc-24) only. See General Note 16 and Views 15C, 16B and 18C.)

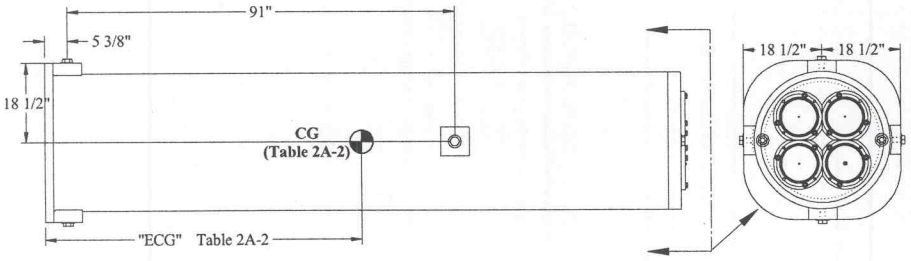

VIEW 6A

Container downended. CG shown is for the empty container with Finish Plug Assemblies (View 12A) installed. See Table 2A-2.

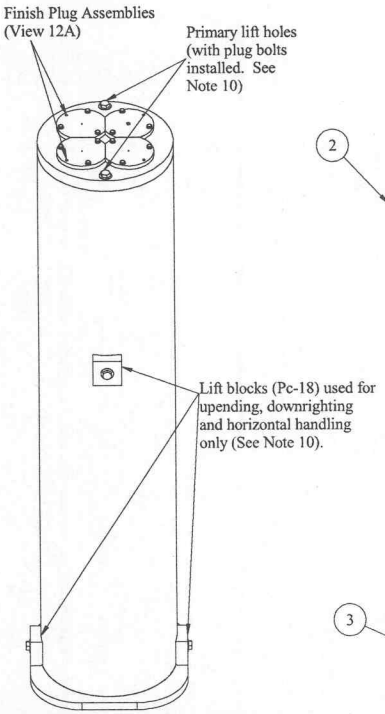

ISOMETRIC ASSEMBLY VIEW 5B

With Finish Plug Assemblies (View 12A).

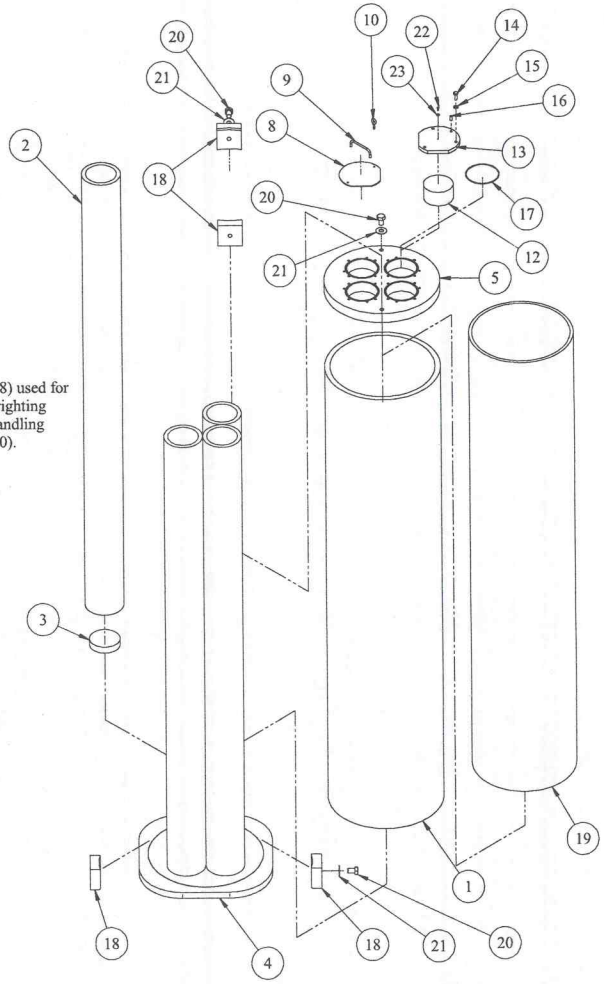

K EXPLODED ASSEMBLY VIEW 4A

ENGINEERING DIVISION, CODE 2370		
DWG. NO. 2301-3289	TITLE LS/TR & TB Disposal Container	
NOT TO SCALE	Sheet 2 of 7	REV K

REV K SHEET 2 LS/TR & TB Disposal Container TITLE 2301-3289 DWG NO.

Lead Yard

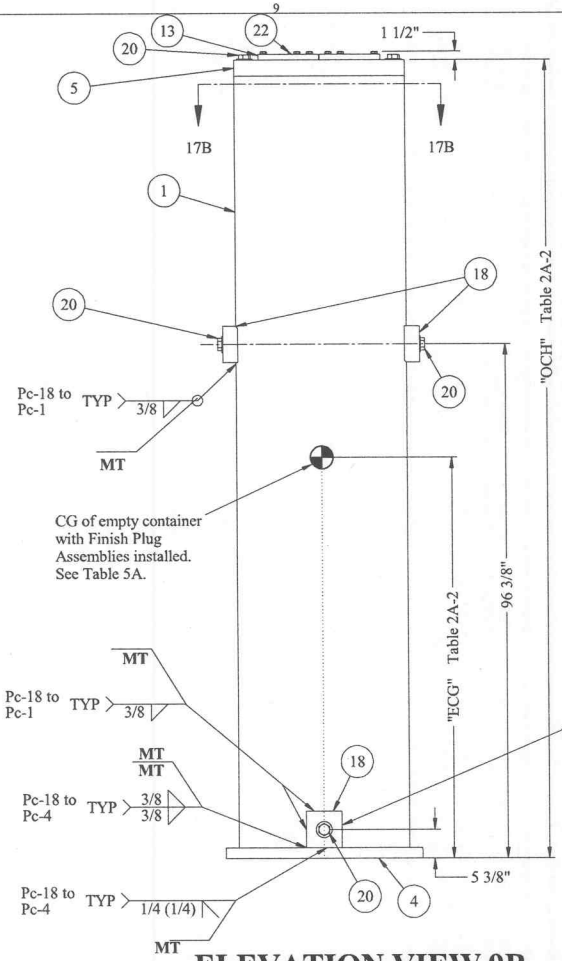

ELEVATION VIEW 9B

Container with Finish Plug Assemblies (View 12A) installed.

Note: Prior to installing the Top Plate (Pc-5) install fill material per General Note 16 and Section View 17B.

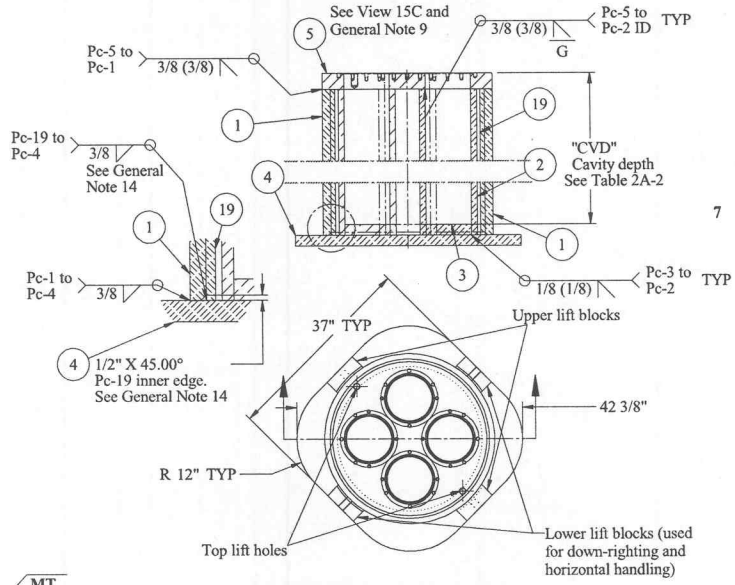

ASSEMBLY VIEW 8B

Cover assemblies, plug assemblies and Lift Rings not shown.

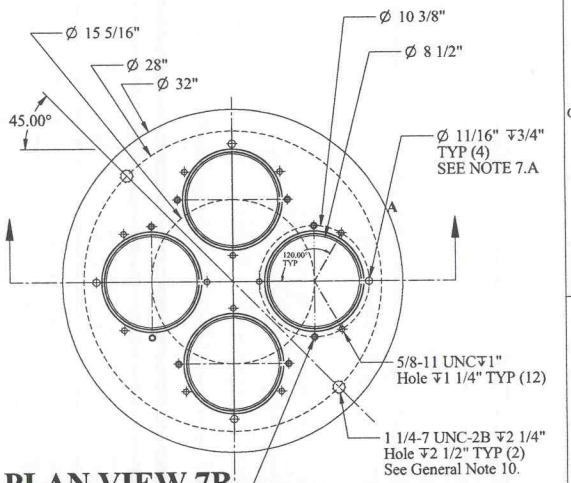

PLAN VIEW 7B

Top plate (Pc-5)

Note: Recommended hole size limits before tapping the 1 1/4-7 UNC-2B threads is 1.1082" to 1.1168". Also, it is recommended that a 3B tap be used to cut these threads.

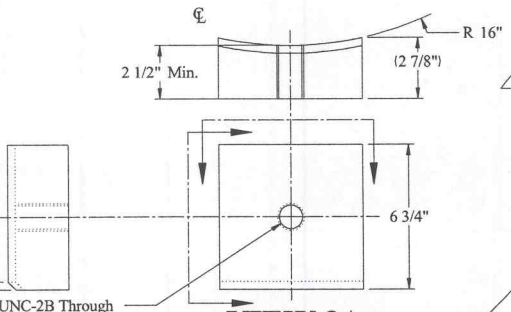

VIEW 8A

Lift Block (Pc-18)

Note: Recommended hole size limits before tapping the 1 1/4-7 UNC-2B threads is 1.1082" to 1.1168". Also, it is recommended that a 3B tap be used to cut these threads.

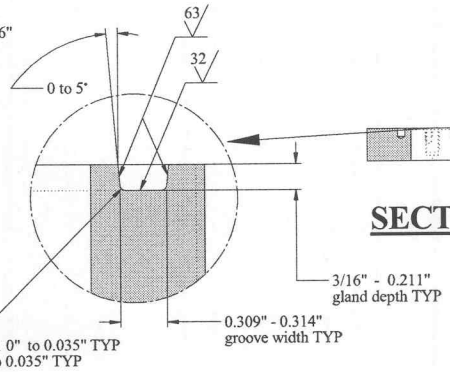

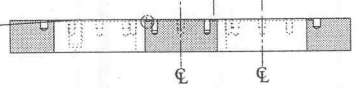

SECTION VIEW 7A (7B)

O-ring seal gland

ENGINEERING DIVISION, CODE 2370		
DWG. NO. 2301-3289	TITLE LS/TR & TB Disposal Container	
NOT TO SCALE	Sheet 3 of 7	REV K

REV K SHEET 3 LS/TR & TB Disposal Container TITLE 2301-3289 DWG NO.

Lead Yard

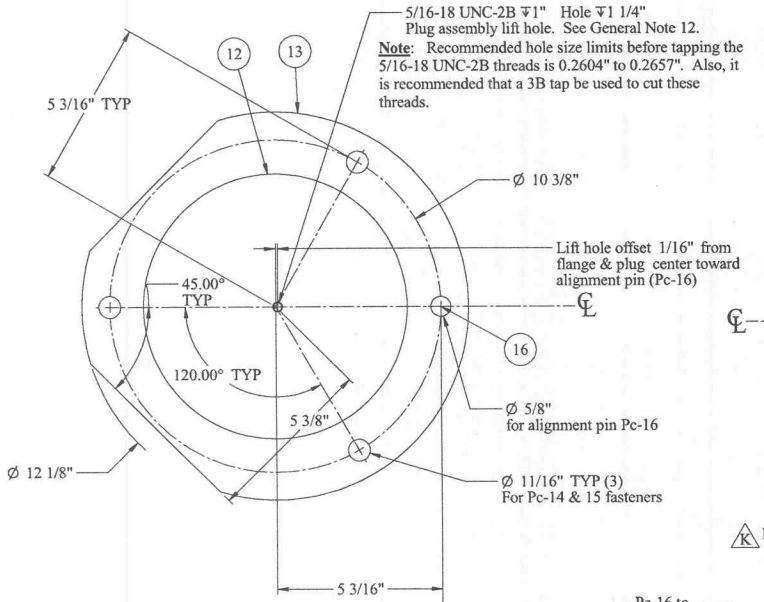

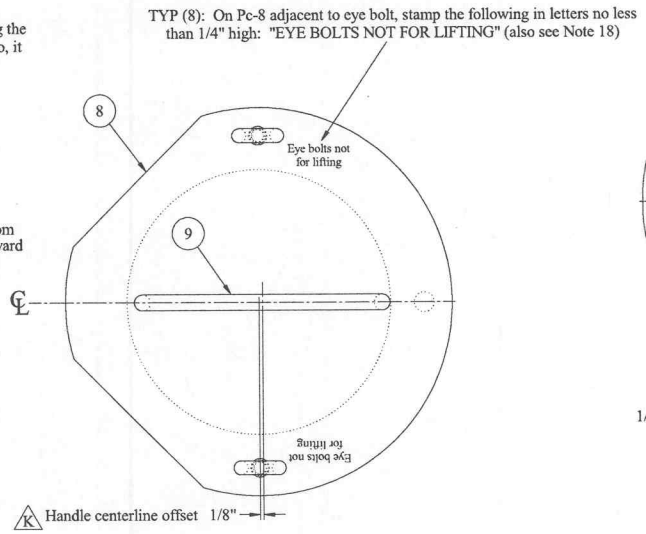

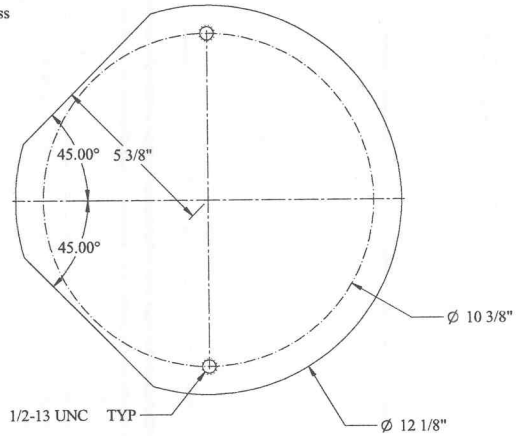

K VIEW 10B

Cover flange (Pc-8)

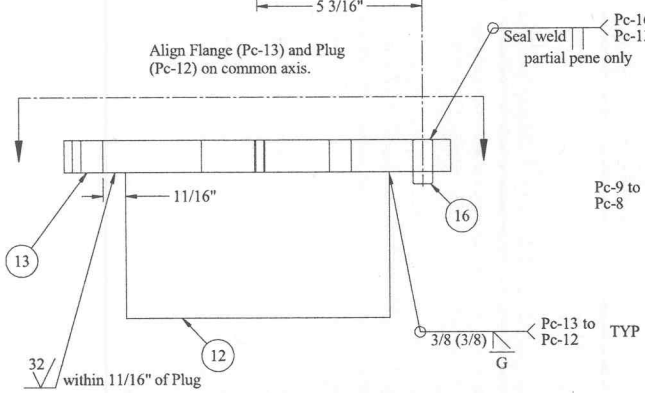

ASSEMBLY VIEW 12A

Finish Plug assembly: Pc-12, 13 &16
(Pc-14 & 15 not shown).

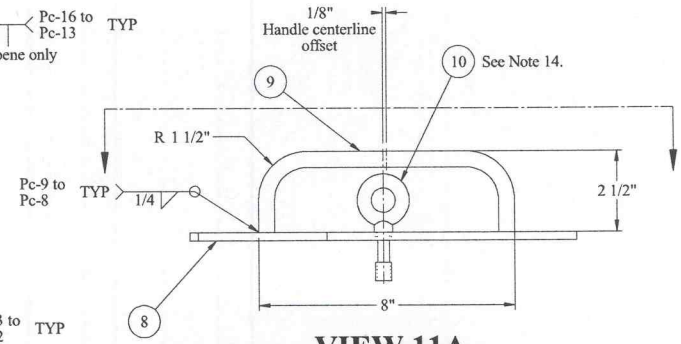

VIEW 11A

Temporary Cover assembly
K Pc- 8, 9 & 10

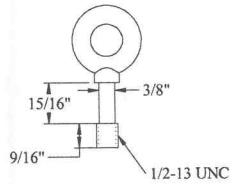

K VIEW 10A

Modified eye bolt (Pc-10)

ENGINEERING DIVISION, CODE 2370		
DWG. NO. 2301-3289	TITLE LS/TR & TB Disposal Container	
NOT TO SCALE	Sheet 4 of 7	REV K

REV K SHEET 4 | LS/TR & TB Disposal Container | TITLE | DWG NO 2301-3289

Lead Yard

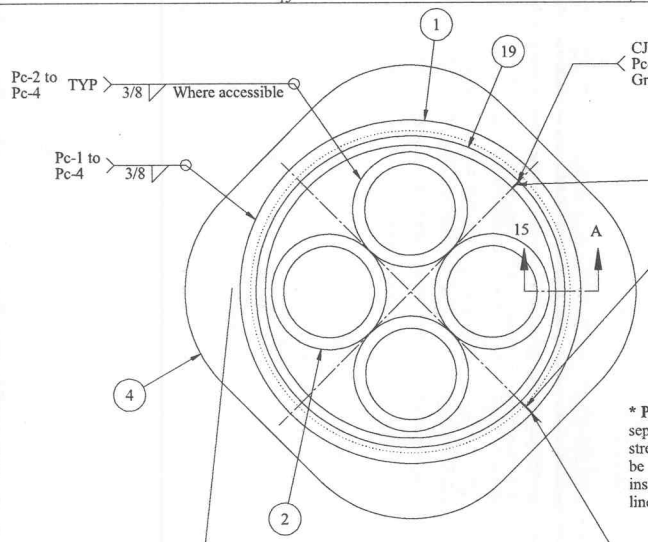

Orient vertical joints in Pc-1 and Pc-19 on different vertical planes between the Pc-2 Cavity pipes as shown.

Note: Spacer plates may be used as fitting aids to maintain position and alignment of the four Pc-2 pipes during assembly, and during placement of inner shield assembly. These fitting aids need not be removed.

*** Pc-1 & Pc-19 fabrication**. Pc-1 and Pc-19 may be welded separately and may be pressed together. Round-up rings and stress relief may be used. Pc-1 and Pc-19 fabrication welds shall be 100% full penetration. Welds may be performed from the inside, outside, or both. The Pc-1 welds along splice & seam lines may use Pc-19 as backing material.

ASSEMBLY VIEW 15C

Pc-1, 2, 4 and Inner Shield assembly

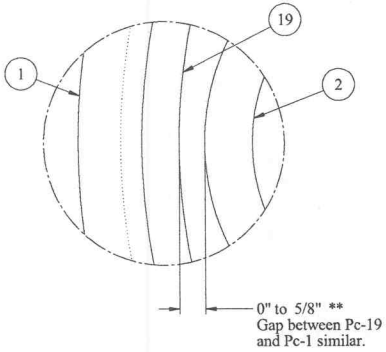

** Pc-19 thickness may not be less than 7/8". Pc-19 OD may vary so long as Pc-19 fits inside Pc-1 and around the cluster of Pc-2 pipes.

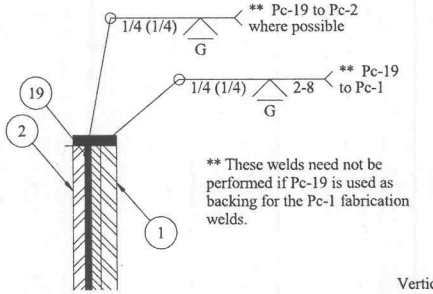

** These welds need not be performed if Pc-19 is used as backing for the Pc-1 fabrication welds.

SECTION VIEW 15A (15C)

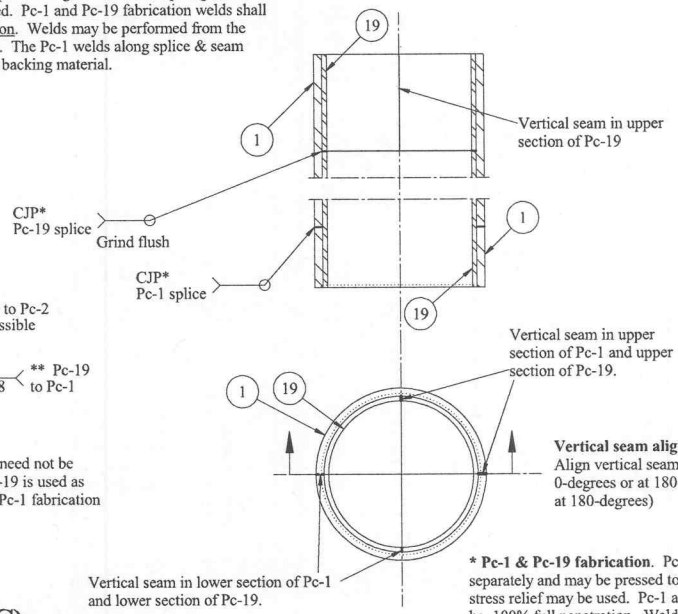

Vertical seam alignment for Pc-1 and Pc-19 splices: Align vertical seams of upper and lower sections at 0-degrees or at 180-degrees (Views show vertical seams at 180-degrees)

*** Pc-1 & Pc-19 fabrication**. Pc-1 and Pc-19 may be welded separately and may be pressed together. Round-up rings and stress relief may be used. Pc-1 and Pc-19 fabrication welds shall be 100% full penetration. Welds may be performed from the inside, outside, or both. The Pc-1 welds along splice & seam lines may use Pc-19 as backing material.

VIEW 14A

Pc-1 & Pc-19 fabrication welds

ENGINEERING DIVISION, CODE 2370		
DWG. NO. 2301-3289	TITLE LS/TR & TB Disposal Container	
NOT TO SCALE	Sheet 5 of 7	REV K

REV K SHEET 5 LS/TR & TB Disposal Container TITLE 2301-3289 DWG. NO.

Lead Yard

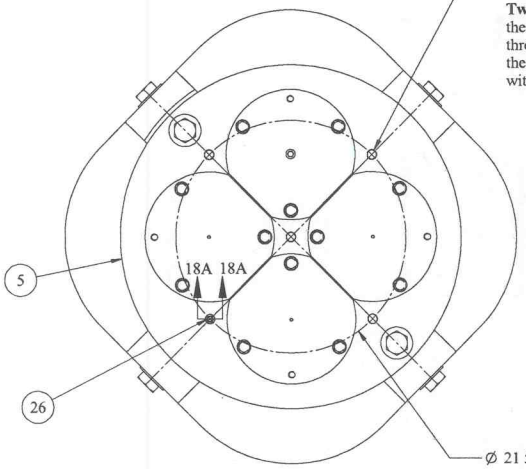

VIEW 18C

Details for retrofit of existing containers in use and fabricated without void fill. Drill and tap five access holes through the top surface of Pc-5 Top Plate as shown. Fill voids through these holes with Pc-24 filler material per Section View 17B. A material transfer pump as described in the note above may be used to facilitate fill. Minimum fill material volume required is listed in Table 2A-1. On completion of fill, plug holes using Pc-26 NPT plugs and Pc-27 thread compound hand tight (with wrench). Countersink Pc-26 plug as specified in Section 18A. Retrofit only per separate instruction.

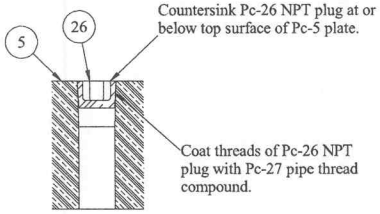

SECTION VIEW 18A (18C)

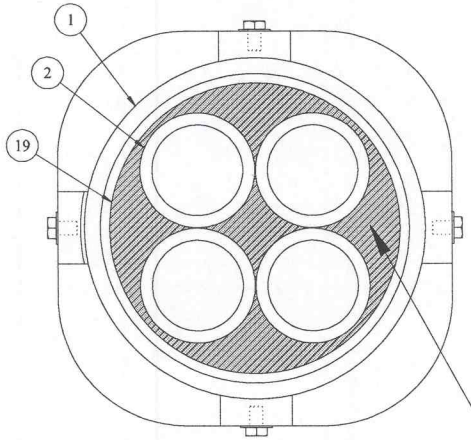

SECTION VIEW 17B (9B)

Void fill requirements

Fill void spaces around the outside of Pc-2 chamber pipes inside Pc-19 to the top edge of Pc-19 with Perlite (Pc-24 material). Minimum fill material volume required is listed in Table 2A-1.

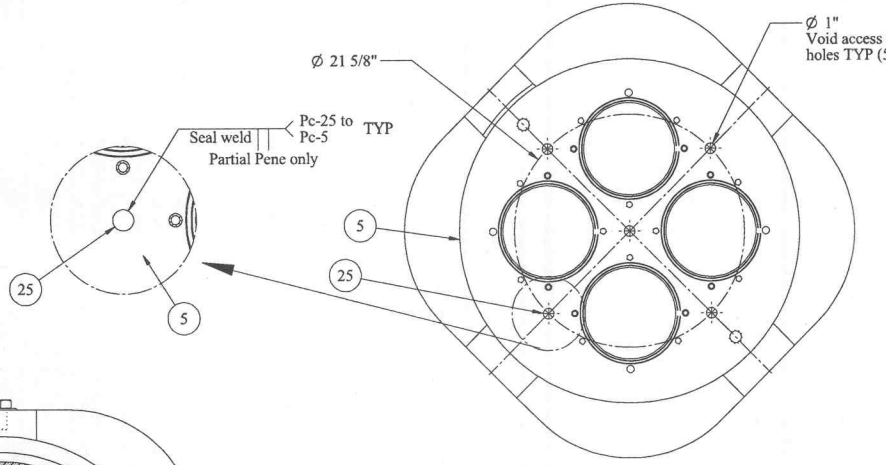

VIEW 16C

Details for retrofit of new containers fabricated without void fill. Drill five access holes through the top surface of Pc-5 Top Plate as shown. Fill voids through these holes with Pc-24 filler material per Section View 17B. Minimum fill material volume required is listed in Table 2A-1. On completion of fill, plug holes with Pc-25 material and seal weld as shown.

ENGINEERING DIVISION, CODE 2370		
DWG. NO. 2301-3289	TITLE LS/TR & TB Disposal Container	
NOT TO SCALE	Sheet 6 of 7	REV K

REV K SHEET 6 LS/TR & TB Disposal Container TITLE 2301-3289 DWG NO.

Lead Yard

(General Notes continued from Sheet 1)

18. **LABEL PLATE REQUIREMENTS (CONTRACTOR OPTION):**
AT THE OPTION OF THE CONTRACTOR, LABEL PLATES MAY BE MADE IN LIEU OF STAMPING OF INFORMATION ONTO THE CONTAINER, AS SPECIFIED IN THIS DRAWING (NOTES 2, 11, AND 12). LABEL PLATES MAY BE MADE OF METAL AND ATTACHED TO THE CONTAINER USING 3M DOUBLE-BACKED TAPE OR SPOT-WELDED.

19. **DOCUMENTATION REQUIREMENTS:** PRIOR TO SHIPMENT OF CONTAINER(S), SEND ALL REQUIRED DOCUMENTATION AS SPECIFIED PER THIS DRAWING TO PSNS FOR REVIEW. AS A MINIMUM, THE "DOCUMENTATION PACKAGE" SHALL CONTAIN:

A. THE WEIGHT RECORDS, AS SPECIFIED IN NOTE 9.

B. THE INSPECTION AND LOAD TEST RECORDS, AS SPECIFIED IN NOTES 10 AND 12. **CONTRACTOR(S) PERFORMING NDT PROCEDURES IN ACCORDANCE WITH TECHNICAL PUBLICATION T9074-AS-GIB-010/271 ARE REQUIRED TO DEVELOP AND MAINTAIN A WRITTEN PROCEDURE THAT HAS BEEN QUALIFED TO MEET THE REQUIREMENTS OF TECHNICAL PUBLICATION T9074-AS-GIB-010/271. A COPY OF THE QUALIFIED PROCEDURE SHALL BE INCLUDED WITH THE NDT DOCUMENTATION REQUIRED BY THIS DRAWING (FOR ENGINEERING REVIEW).**

C. CERTIFICATE OF COMPLIANCE:

1) FOR THE TYPE AND VOLUME OF VOID FILL INSTALLED, AS SPECIFIED IN NOTE 16.

2) FOR MEETING THE CLEANLINESS REQUIREMENTS, AS SPECIFIED IN NOTE 17

REVISION (continued from sheet1)

SYM	BY	DATE	CHK	DATE	DESCRIPTION	APPROVAL
C	/S/ J. Kineman	11-28-04	/S/ M. Shamion	11-28-04	1. Incorporated DRN 3289 C-1; 2. Replaced the four Pc-19 quarters with one rolled cylinder shield removed Views 13C & 14B; Weights, capacities and CG dimensions of Table 2A-2 changed; 3. Changed description and specification of Pc-1; increased thickness of Pc-1; 4. Reduced the gap between the four Pc-2 Cavity pipes (See Assembly View 15C); cutouts in Top Plate (Pc-5, View 7B), Cover Flange (Pc-8, View 11A) & Finish Flange (Pc-13, View 12A) altered accordingly; 5. Removed dimensions "LB Span" from Table 2A-2 and "LBE" from Table 2A-1 (As before, these dimensions apply to both containers and are shown in Views 6A & 9B, respectively); 6. Added cavity depth reference dimension "CVD" to Assembly View 8B sectional and to Table 2A-2; 7. Changed note for cutting the 5/16-18 UNC hole of Assembly View 12A Plan; 8. Added Pc-20, 21 & 22, 23 plug bolts & washers; removed note in Assembly View 12A relating to plug bolts. 9. Added General Note 14 torque specification of flange bolts and General Note 15 delivery requirements.	/S/ N. Florio 11-28-04
D	/S/ J. Kineman	9-14-2005	/S/ M. Shamion	9-14-2005	General Note 6F, changed to read that all MT inspection and acceptance criteria of specified welds are required per References C & D, respectively.	/S/ N. Florio 9-14-2005
E	/S/ J. Kineman	1-9-2006	/S/ J. D. McWhirter	1-9-2006	Void fill material (Pc-24) and retrofit Pc-25 & 26 added requiring document changes as follows: 1. General Note 16 added; General Note 2 modified ("Rev E" added to drawing number stamped on top plate); General Note 9 modified; 2. Table 2A-1, added void fill volume requirements; Table 2A-2, weights and capacity for LSTR and TR containers modified; 3. Added process note to View 8B Sectional; 4. Added Views 16C & 18C and Sectional View 17B(9B) /S/ S.M. Miller 1-9-2006 C/2305.1 Concurrence	/S/ J. M. Byrnes 1-9-2006
F	/S/ J. Kineman	4-14-2006	/S/ K. Garrett	4-14-2006	This revision makes changes to the retrofit requirements introduced in Rev E: 1. View 18C, ¾-14 NPT void fill hole specification changed; process note added on recommended and maximum twist drill bit sizes; requirement to use thread sealant (new Pc-27—see Rev note 5) on NPT plugs added; 2. New Section 18A(18C) added to show Pc-26 NPT plug installation requirements; 3. Table 2A-1, changed values of minimum volume of installed void fill material required to values based on actual fill data; 4. Table 2A-2, revised approximate empty container weight and allowed capacity values based on the new Table 2A-1 values (Rev note 3) and expected density of void fill material; 5. List of Materials, Pc-26 NPT plug description and specification changed; Thread sealant added as Pc-27 (see Rev note 1).	/S/ J. M. Byrnes 4-14-2006
G	/S/ M. Schroder	11-5-2007	/S/ M. Shamion	11-5-2007	1. Updated title info. for Reference A to eliminate reference to outdated specifications. 2. Deleted "Rev E" from required information that is stamped per General Note 2. 3. Clarified void filling information in Gen. Note 16. 4. Clarified size info. associated w/ hoist rings in General Notes 10 & 12.	/S/ J. M. Byrnes 11-7-2007
H	/S/ J. Terrell	10-29-2009			1. Incorporated DRN 3289 H-1. 2. Deleted "No test required" from Notes 11 & 12 (CATS DIV-98916 relates). 3. Change References B and updated related Notes 6.A & 6.B. 4. Added Note 17. 5. Removed previous Revision Symbols for clarity. 6. Added Sheet 7 to accommodate the rearrangement of the Revision Blocks. 7. Changed Note 7.C. with new paint information.	/S/ J. Byrnes 10-29-2009
J	/S/ J. Terrell	5-23-2011			1. Added new Notes 18 & 19, per last contractor's request. 2. Changed Note 6 to also see Note 19B. 3. Changed LOM: PC-18 from 2.5" THK to 2.875" THK. Also update View 8A for overall dim of 2-7/8" THK. 4. Clarified weld and MT symbols of View 9B and removed MT symbols of Views 8B, 12A and 15C. 5. Modified the 3/8" chamfer callout on PC-18 (View 8A). 6. Added to Note 7A to not paint the inside of the 11/16" dia. alignment holes of PC-5 (View 7B). Also, made these holes deeper (from 1/2" to 3/4" to prevent previous problems). 7. Fixed and dimensioned B.C. of PC-13 of View 12A.	/S/ J. Byrnes 5-23-2011
K	/S/ A. Olason	6-9-2015	/S/ Mark H. Schroder	6-9-2015	1. Pc. 7 (Cover Insert) & 11 (Alignment Pin) deleted. List of materials updated accordingly. 2. Changed all dimension and line colors to black. 3. Changed "SCALE AS SHOWN" beneath drawing views to "NOT TO SCALE in the title block of each sheet. 4. Changed font sizes and line weights to maintain consistency. 5. Edit note 11 to round up weight when determining SPS capacity.	/S/ J. Byrnes 6-10-2015

ENGINEERING DIVISION, CODE 2370

DWG. NO.	TITLE	
2301-3289	LS/TR & TB Disposal Containers	
NOT TO SCALE	Sheet 7 of 7	REV K

REV K | SHEET | LS/TR & TB Disposal Container | TITLE | 2301-3289 | DWG NO.

Lead Yard

General Notes

1. This drawing provides a torque-based proof test procedure for UNC-2B Safety Hoist Ring (SHR) threaded lift holes and NDT procedure for welded lifting attachments.

2. **Torque-Based Proof Test Procedure For Threaded Lift Holes** (This applies to a lift point which has no attachment welds, such as that shown in Figures 2B and 4B)

   The test applies to the Safety Hoist Rings listed in Table 3B only, and is valid only for lift holes of sufficient thread depth (Table 3B) in base material, the material yield stress of which is greater than or equal to 30,000 psi. The test bolt, nut and washer that comprise the test apparatus must comply with the specifications of Table 3A and with the dimensions of Table 3B for the hole being tested. Certificate of Compliance is required for all test hardware. Before each test, inspect the threads of the bolt and the nut to ensure they are free of lubrication, dirt and debris. Clean as necessary. Inspect threads for signs of distortion or wear. If distortion or wear is detected on any one of the three components of the test apparatus (bolt, nut or washer), obtain a new test bolt, nut and washer for the test.

   A. Thread the nut onto the cap screw until the leading surface of the nut is at the required length of thread engagement as listed in Table 3B. The tolerance on thread engagement is $^{-0}/_{+5}$ % with a minimum tolerance of $^{1}/_{32}$ in. (See Figure 2B).

   B. Apply fresh Molykote™ P37 (or equivalent) lubricant to the threads above and starting at the leading surface of the nut (See Figure 2B). Thread the nut fully onto the lubricated threads of the bolt and apply lubricant to the trailing surface of the nut. Do not lubricate the threaded hole.

   C. Inspect the lift hole threads for lubrication, dirt and debris. Clean as necessary. Install the proof test assembly (cap screw, nut and washer) into the tapped hole to the required depth of engagement listed in Table 3B.

   D. While restraining the cap screw, torque the nut to the torque listed in Table 3B (the tolerance is $^{+5}/_{-0}$ %). Re-check the torque on nut;

   E. After ten minutes, remove the proof test assembly. In this arrangement, only the portion of the threads on the cap screw that engage the nut is lubricated. The cap screw threads that engage the tapped hole of the component are not lubricated. Remove lubricant (1x visual confirmation of removal required) from the tapped hole surfaces at the completion of proof testing.

   F. Perform a visual 1x inspection of the accessible area for damage or deformation. Inspect internal threads for residual lubrication, dirt and debris. Clean as necessary. Inspect threads for signs of damage or deformation. Perform a 2B Go/No-Go gauge check of the lift hole. The No-Go acceptance criterion is that the No-Go gauge does not enter the material more than three complete turns. The threads shall pass a go/no-go gauge check and show no signs of cracks, permanent distortion or other damage.

Table 3B

See Table 3A for test apparatus specifications

SHR & test thread size / SHR rated load (Lbs.)	*Minimum bolt length* General Note2*	*Thread Engagement Steps A & C*	*Test torque Step D*
5/16-18 UNC / 800 lbs.	1.5 in.	$0.54\ ^{+0.00}/_{-0.03}$ in.	$84\ ^{+4}/_{-0}$ in-lbs.
3/8-16 UNC / 1,000 lbs.	1.5 in.	$0.54\ ^{+0.00}/_{-0.03}$ in.	$12\ ^{+1}/_{-0}$ ft-lbs.
½-13 UNC / 2,500 lbs.	2 in.	$0.78\ ^{+0.00}/_{-0.04}$ in.	$28\ ^{+1}/_{-0}$ ft-lbs.
5/8-11 UNC / 4,000 lbs	2.25 in.	$0.78\ ^{+0.00}/_{-0.04}$ in.	$60\ ^{+3}/_{-0}$ ft-lbs.
¾-10 UNC / 7,000 lbs.	2.5 in.	$1.03\ ^{+0.00}/_{-0.05}$ in.	$100\ ^{+5}/_{-0}$ ft-lbs.
1-8 UNC / 10,000 lbs.	3.25 in.	$1.29\ ^{+0.00}/_{-0.07}$ in.	$230\ ^{+12}/_{-0}$ ft-lbs.
1 ¼-7 UNC / 15,000 lbs.	3.75 in.	$1.89\ ^{+0.00}/_{-0.10}$ in.	$470\ ^{+24}/_{-0}$ ft-lbs.
1 ½-6 UNC / 24,000 lbs.	4.5 in.	$2.70\ ^{+0.00}/_{-0.14}$ in.	$800\ ^{+40}/_{-0}$ ft-lbs.
2-4 1/2 UNC / 30,000 lbs.	5.75 in.	$2.96\ ^{+0.00}/_{-0.15}$ in.	$1200\ ^{+60}/_{-0}$ ft-lbs.

** Note: Bolt length does not include thickness of the head.*

Table 3A

Test hardware specification. See General Note 2

Pc	Qty	Name	Description	Specification
1	1	Test bolt	Socket Head Cap Screw, UNC-2A or UNC-3A	ASTM A574, ANSI B18.3
2	1	Test nut	Heavy Hex nut, UNC-2B	ASTM A194/A Grade 2H
3	1	Test washer	Hardened washer	ASTM F436 Type 1 circular

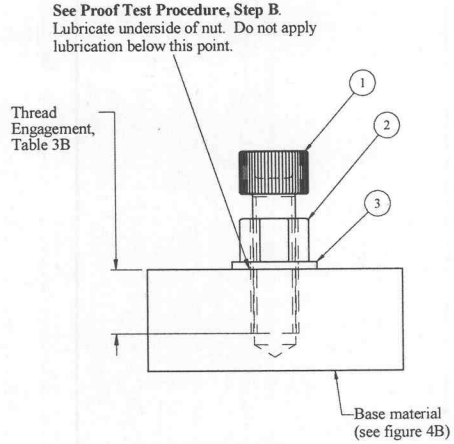

Figure 2B

Torque-based proof test arrangement

References

A. NAVSEA TECHNICAL PUBLICATION T9074-AS-GIB-010/271 (TP-271), Requirements For Nondestructive Testing Methods

B. MIL-STD-2035, Nondestructive Testing Acceptance Criteria

REVISION

SYM	BY	DATE	CHK	DATE	DESCRIPTION	APPROVAL
A	\S\ J. Kineman	10-3-03	\S\ M. Soma	10-3-03	Added requirement for Certificate of Compliance on test hardware in General Note 2; added test apparatus specifications for 5/16-18 Safety Hoist Rings in Table 3B; corrected table reference for Thread Engagement dimension in Figure 2B	\S\ N. Florio 10-3-03
B	\S\ J. Kineman	2-26-04	\S\ M. Soma	2-26-04	Added UNC-3A option to the test hardware specification for the Pc-1 bolt in Table 3A. Clarifying footnote added to Table 3B.	\S\ N. Florio 2-26-04
C	\S\ J. Terrell	10-29-09			1. Changed title of DWG and added Sheet 2 to include NDT procedures for welded lifting attachments. 2. Reformatted Notes 1 & 2. 3. Added References A & B. C/2370.21 Concurrence: \S\ G. Holmes 10-29-09	\S\ J. Byrnes 10-29-09
D	\S\ J. Terrell	2-17-2011			1. Changed General Note 4 to include aluminum. C/2370.21 Concurrence: \S\ G. Holmes 3-7-2011	\S\ J. Byrnes 3-9-2011

DWG REVISION SUM.

REV	DATE
1	
2	
3	
4	
5	
6	
7	
8	
9	

COORDPHONE

ESTIMATOR

J.O. NUMBER

DISTRIBUTION STATEMENT: N/A

ADC Review

SIGNATURE	DATE
\S\ J. Byrnes	10-29-09

CAD INFORMATION

SHEETS OF THIS DRAWING WERE COMPOSED USING SOLID EDGE OR SMARTSKETCH. REVISIONS TO THESE SHEETS SHOULD BE MADE ON THE WINDOWS NT CAD SERVER.

File name: DWG 2301-3411 Rev D.dft

This drawing was last worked on 01/20/2011

CONCURRENCE

CODE	2370.21					
SIGN	SIGNATURE					
DATE	9-17-03					
CODE						
SIGN						
DATE						

NO DEVIATIONS SHALL BE MADE

APPROVAL	
BRANCH	SIGNATURE & DATE
BRANCH SUPV.	/S/ N. Florio 9-17-03
SECTION SUPV.	N/A
CHECKED	/S/ M. Schroder 9-17-03
DRAWN	/S/ J. Kineman 9-17-03
DESIGNED	/S/ J. Kineman 9-17-03

PUGET SOUND NAVAL SHIPYARD
ENGINEERING DIVISION, CODE 2370

UNLESS OTHERWISE SPECIFIED, DIMENSIONS ARE IN INCHES

F/SR NO. | TOLERANCES: See General Notes.

TITLE: Torque-based Proof Test for Safety Hoist Ring Lift Holes and NDT for Lifting Attachments

SCALE AS SHOWN | DRAWING NO. 2301-3411 | REV D

Sheet 1 of 2

PRINT ISSUE RECORD

STIC 431	3	3
BCF labels		
EPCO	1	1
NRRO	1	1
460	3	3
2350		
2340		
2330		
2320		
2310		
2302.3		
99		
94		
81		
72		
71		
67		
64		
57		
56		
53		
41		
38		
31		
26		
23		
17		
11		
06		
248.2		
248.3		
248.5		
250		
2370.21	1	1
2370.22		
2370.25		
2370.24	4	4
REV	no	A
SHOP		
DATE		

BEFORE REV: 1 D

TITLE: Torque-based Proof Test for Safety Hoist Ring Lift Holes

DWG NO. 2301-3411

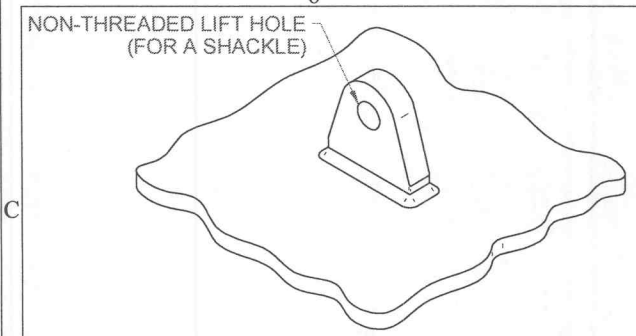

FIGURE 6C:
LIFT LUG TYPE - WELDED LIFTING ATTACHMENT
INSPECT IAW NOTE 3 (OR 4)

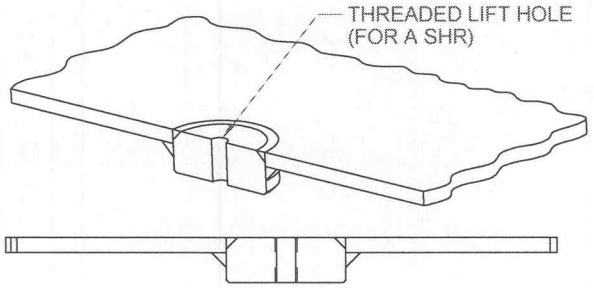

FIGURE 5C:
LIFT BLOCK TYPE - WELDED LIFTING ATTACHMENT
INSPECT IAW NOTES 3 (OR 4) AND 2.F.

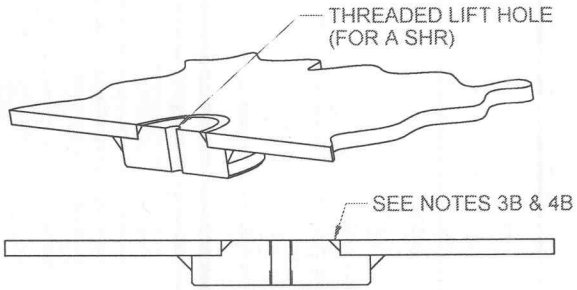

FIGURE 4C:
LIFT BLOCK TYPE (WITH SHOULDER)
- WELDED LIFTING ATTACHMENT
INSPECT IAW NOTES 3 (OR 4) AND 2.F.

General Notes (continued from Sheet 1)

3. NDT Requirements For Carbon Steel Welded Lifting Attachments, inspect per the following:

A. Prior to and after the load test, perform a visual inspection of the attachment welds of each lift lug/block as well as the accessible base metal of each lift lug/block. Ensure no apparent deformation, cracks, or other apparent damage of these load bearing parts.

B. Prior to and after the load test, the attachment welds of each lift lug/block as well as the accessible base metal of each lift lug/block shall be Magnetic Particle (MT) inspected per NAVSEA Publication T9074-AS-GIB-010/271 (Reference A). Use the acceptance criteria of MIL-STD-2035 (Reference B), Class 3 for Welds and Forgings/Wrought Material for Base Metal. This inspection shall include the inside of the non-threaded lift lug hole, as shown in Figure 6C. NDT of threaded safety hoist ring (SHR) holes shall be performed IAW General Note 2.F of this drawing. For a lift block with a shoulder feature such as shown in Figure 4C, the bevel weld at the top surface is not considered load-bearing and will not require NDT.

C. Load test requirements shall be IAW parent manufacture drawing.

4. NDT Requirements For Stainless Steel (or Aluminum) Welded Lifting Attachments, inspect per the following:

A. Prior to and after the load test, perform a visual inspection of the attachment welds of each lift lug/block as well as the accessible base metal of each lift lug/block. Ensure no apparent deformation, cracks, or other apparent damage of these load bearing parts.

B. Prior to and after the load test, the attachment welds of each lift lug/block as well as the accessible base metal of each lift lug/block shall be Liquid Penetrant (PT) inspected per NAVSEA Publication T9074-AS-GIB-010/271 (Reference A). Use the acceptance criteria of MIL-STD-2035 (Reference B), Class 3 for Welds and Forgings/Wrought Material for Base Metal. This inspection shall include the inside of the non-threaded lift lug hole, as shown in Figure 6C. NDT of threaded safety hoist ring (SHR) holes shall be performed IAW General Note 2.F of this drawing. For a lift block with a shoulder feature such as shown in Figure 4C, the bevel weld at the top surface is not considered load-bearing and will not require NDT.

C. Load test requirements shall be IAW parent manufacture drawing.

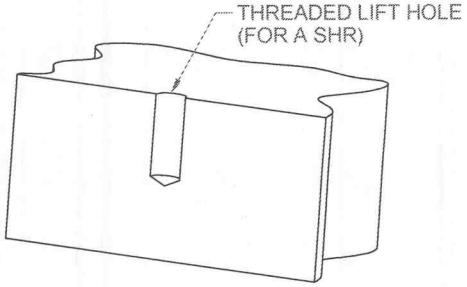

FIGURE 4B:
THREADED LIFT HOLE - NO ATTACHMENT WELDS
TEST AND INSPECT IAW NOTE 2.

ENGINEERING DIVISION, CODE 2370		
DWG. NO. 2301-3411	TITLE NDT For Lifting and Handling	
SCALE AS SHOWN	Sheet 2 of 2	REV D

SHEET (SET) 2 D | TITLE: Temporary Proof Test for Safety Hoist Ring Lift Blocks | DWG. NO. 2301-3411